REG	STATE	PROJECT	SHEET NO.	TOTAL SHEETS

CONCRETE ROUND PIPE CULVERT
FILL HEIGHT AND PIPE CLASS TABLE

PIPE SIZE DIAMETER	EMBANKMENT					TRENCH			
	MINIMUM COVER	CLASS II	CLASS III	CLASS IV	CLASS V	CLASS II	CLASS III	CLASS IV	CLASS V
		MAXIMUM FILL HEIGHT ABOVE TOP OF PIPE IN METERS							
300	300	3	3.0	4.5	7.0	5.5	5.5	8.0	4.0
450	300	3	3.0	7.5	12.0	4.0	4.0	9.0	13.5
600	300	3	3.0	4.5	9.0	4.5	4.5	6.5	12.0
750	300	2.5	4.0	4.5	10.5	4.0	5.0	6.0	14.0
900	300	2.5	2.5	6.0	12.5	3.0	4.0	8.0	17.0
1200	300	3.5	4.0	8.0	13.5	4.5	5.0	9.0	15.0
1500	300	4.5	5.0	8.5	13.5	4.5	6.0	9.5	15.0
1800	300	4.0	5.0	9.0	12.5	4.5	6.0	10.5	15.0
2100	300	4.0	5.5	9.0		4.5	7.0	11.0	
2400	300	4.0	6.0			4.5	7.0		
2700	350	4.5	6.0			5.5	8.0		

LEGEND:

- Bedding material
- Embankment material placed in layers not exceeding 150 mm compacted depth.
- Approved granular material or fine compactable soil placed in layers not exceeding 150 mm compacted depth.

NOTE:

1. Dimensions not labeled are in millimeters.
2. When directed, camber pipe culverts upward from a chord through the inlet and outlet inverts an ordinate amount equal to 1% of the pipe length. Develop camber on a parabolic curve. If the midpoint elevation on the parabolic curve as designed exceeds the elevation of the inlet invert, reduce the amount of camber or increase the pipe culvert gradient
3. Measure minimum cover from the top of the pipe culvert to the subgrade for flexible pavements, and to the top of the pavement for rigid pavements. Measure maximum fill height from the top of the pipe to the top of the pavement for both flexible and rigid pavements.
4. Pipe compaction limits shown are for pipe installation in an embankment. For pipe installation in a trench, the compaction limits shall be the walls of the trench.
5. Where unyielding or unstable material is encountered, install the pipe culvert according to the limits of pipe compaction shown on Standard M602-3.
6. When grades exceed 10% install supplemental concrete pipe ties on pipe culvert or install bell and spigot pipe.
7. Maximum fill heights for pipe culvert installations may be increased on approval of site-specific structural pipe designs meeting the criteria of AASHTO Standard Specifications for Highway bridges.

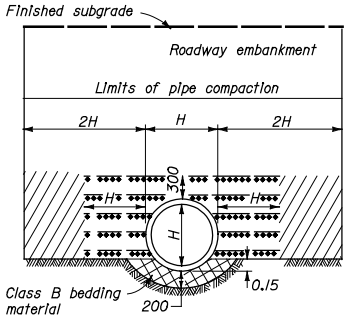

EMBANKMENT INSTALLATION

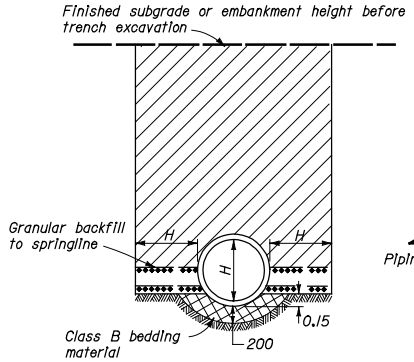

TRENCH INSTALLATION

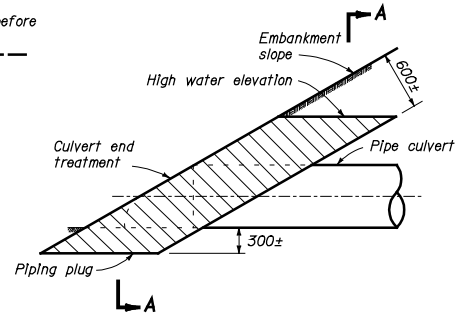

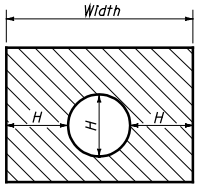

SECTION A-A

Construct a piping plug of impermeable backfill material at the pipe inlet where granular material is used for backfill. Width may be adjusted to tie into impervious material.

PIPING PLUG

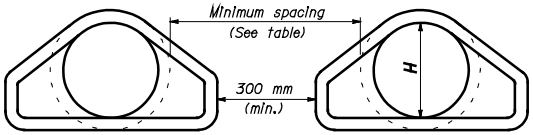

MINIMUM SPACING		
DIAMETER	EMBANKMENT	TRENCH
300-900	380	2H
900-2400	0.5H	1830
OVER 2400	1220	1830

MULTIPLE ROUND PIPE INSTALLATION

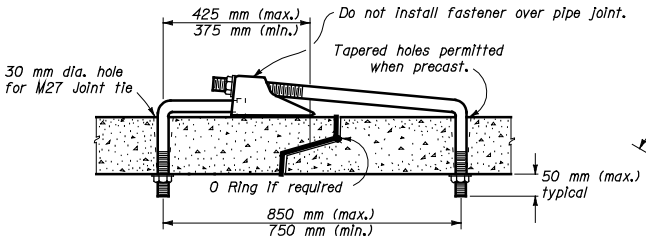

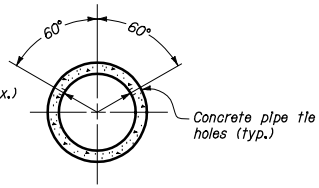

SUPPLEMENTAL CONCRETE PIPE TIE

NO SCALE

U.S. DEPARTMENT OF TRANSPORTATION
FEDERAL HIGHWAY ADMINISTRATION
FEDERAL LANDS HIGHWAY OFFICE

METRIC STANDARD

CONCRETE PIPE CULVERT INSTALLATION

STANDARD APPROVED FOR USE 03/96

REVISED:

STANDARD M602-7

MST60207.DGN

$$$$$DGNSPEC$$$$$ $$$$$SYTIME$$$$$