REG	STATE	PROJECT	SHEET NO.	TOTAL SHEETS

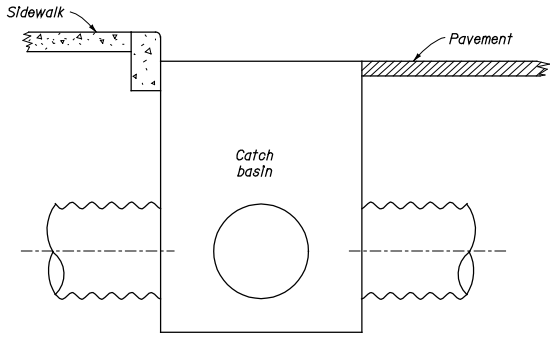

TYPICAL INSTALLATION
CURB SECTION

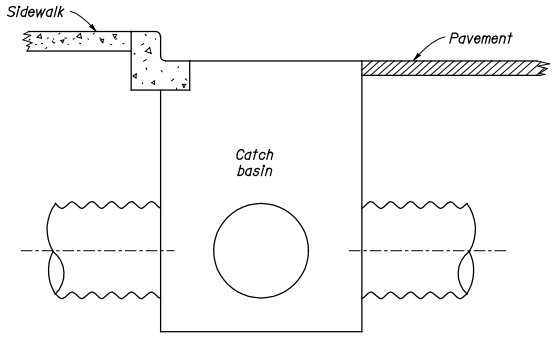

TYPICAL INSTALLATION
CURB AND GUTTER SECTION

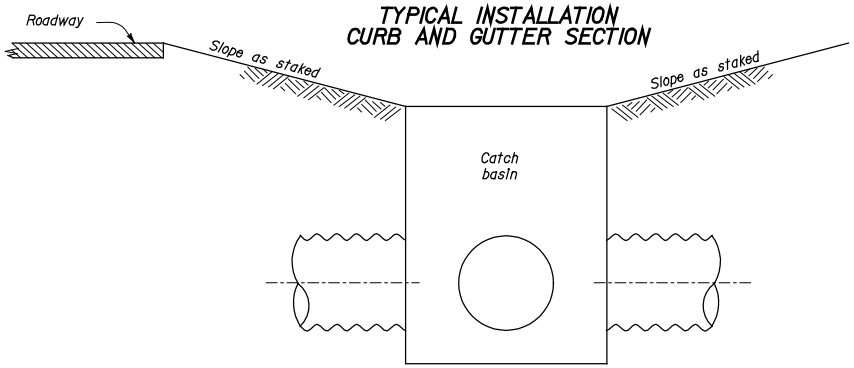

TYPICAL INSTALLATION
DITCH SECTION

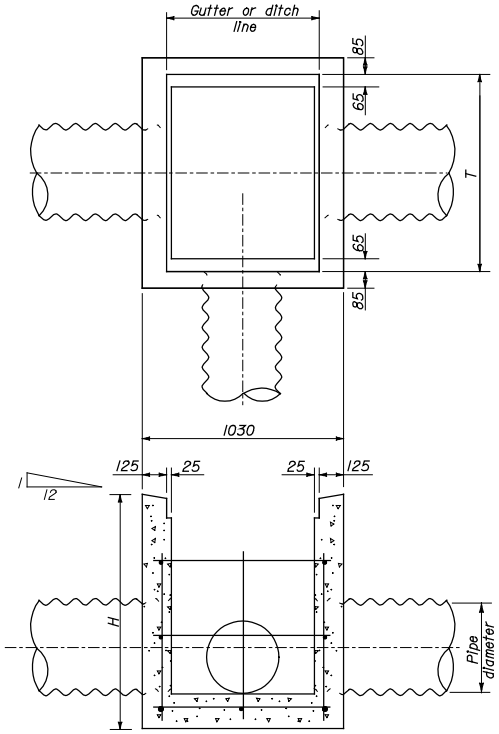

All reinforcing steel
#13 at 300 mm±.
Bend to clear pipe.

INLET DETAIL

NOTE:

1. Dimensions not labeled are in millimeters.
2. CONCRETE: Chamfer exposed edges 20 mm unless otherwise shown. Give all concrete surfaces a Class 1 finish.
3. The minimum concrete cover to the face of any bar is 50 mm unless otherwise shown.
4. See Detail M604-2 for Type A Frame and Grate and Detail M604-3 for Type B Frame and Grate.

CONCRETE CATCH BASINS

PIPE SIZE DIAMETER	DIMENSIONS: DEPTH H	FRAME AND GRATE TYPE A T	FRAME AND GRATE TYPE B T
300	900	780	780
450	900	780	780
600	1200	1010	1020
750	1200	1240	1260
900	1350	1470	1500
1050	1500	1700	1680
1200	1650	1930	1920

CONCRETE CATCH BASINS

TABLE OF ESTIMATED QUANTITIES

PIPE SIZE DIAMETER	CONCRETE m^3	MASS (kilograms): REINFORCING STEEL	FRAME AND GRATE TYPE A	FRAME AND GRATE TYPE B
300	0.6	24	98	108
450	0.6	24	98	108
600	0.8	37	123	142
750	0.9	42	148	177
900	1.2	46	174	211
1050	1.4	59	199	263
1200	1.7	68	225	297

NO SCALE

U.S. DEPARTMENT OF TRANSPORTATION
FEDERAL HIGHWAY ADMINISTRATION
FEDERAL LANDS HIGHWAY OFFICE

METRIC STANDARD

CATCH BASIN TYPE 1

STANDARD APPROVED FOR USE 03/96

REVISED: 5/97

STANDARD M604-1

MST6040I.DGN

$$$$$DGNSPEC$$$$$

$$$$$SYTIME$$$$$$