REG	STATE	PROJECT	SHEET NO.	TOTAL SHEETS

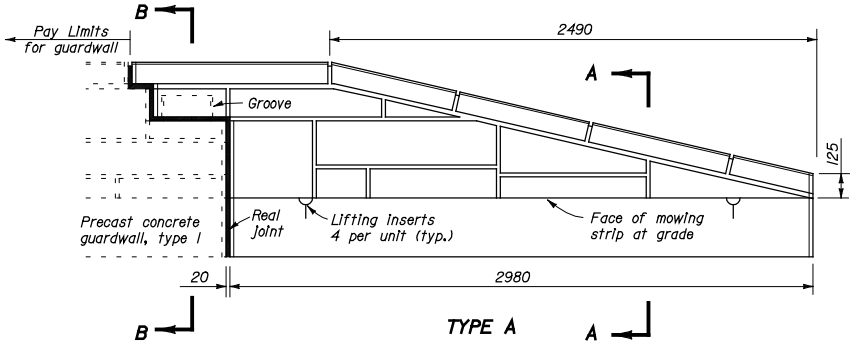

TYPE A

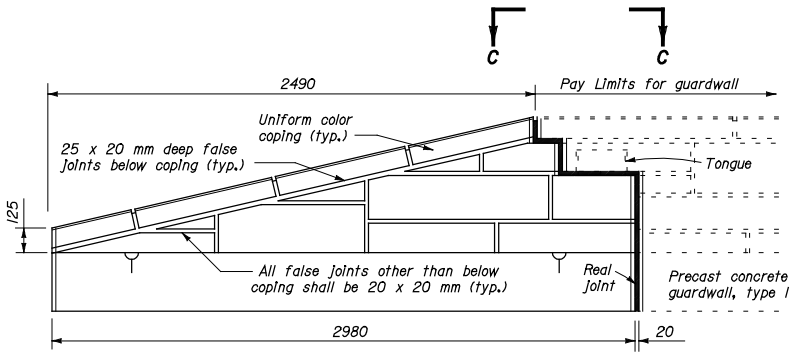

TYPE B

TERMINAL SECTIONS

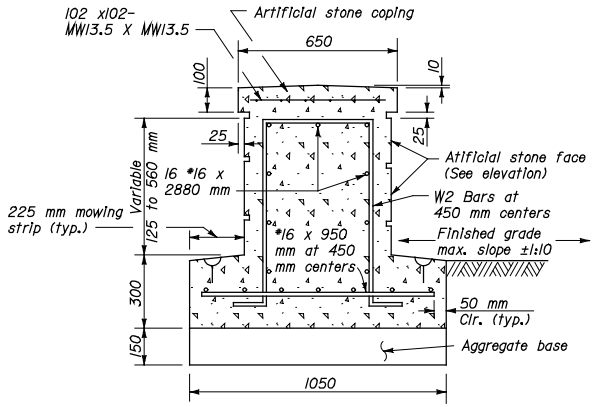

SECTION A-A

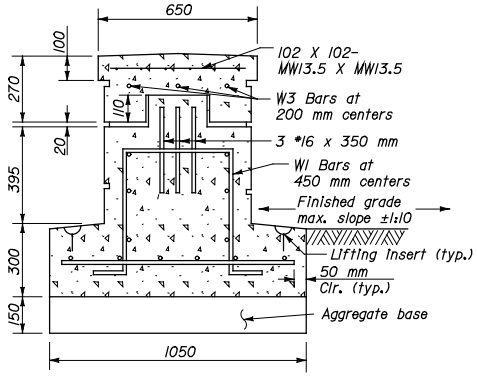

SECTION B-B

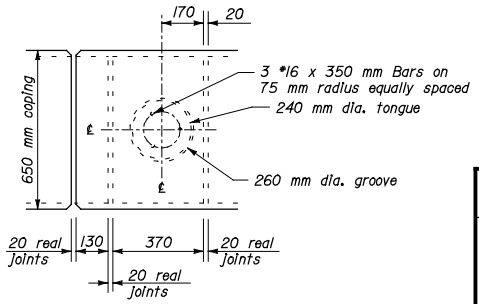

VIEW C-C

NO SCALE

NOTE:

1. Dimensions not labeled are in millimeters.
2. Terminal sections, Type A and Type B, are to interlock with any of the precast concrete guardwall segments.
3. Sealant for the real joint covers the perimeter joint of the capstone, sides, and top and sides of the footing.
4. Precast the entire wall section, no cast-in-place is allowed.
5. Unless located outside the clear zone, use termial sections Type A and B with an earth berm as detailed on Standard M204-1, Earth Berm for Roadside Barrier Terminal Sections, and M204-2, Earth Berm for Median Barrier Terminal Sections.
6. Minimum concrete cover 50 mm unless shown otherwise.

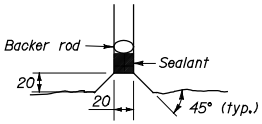

REAL JOINTS DETAIL

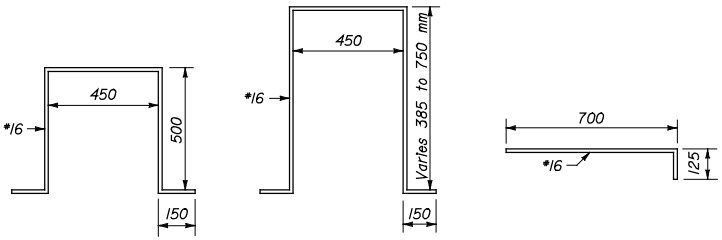

W1 BARS W4 BARS W3 BARS

BENDING DIAGRAMS

U.S. DEPARTMENT OF TRANSPORTATION
FEDERAL HIGHWAY ADMINISTRATION
FEDERAL LANDS HIGHWAY OFFICE

METRIC STANDARD

PRECAST CONCRETE GUARDWALL, TYPE I TERMINAL SECTIONS, TYPES A AND B

STANDARD APPROVED FOR USE 03/96

REVISED: 5/97

STANDARD M618-3

MST6I803.DGN

$$$$$DGNSPEC$$$$$ $$$$$SYTIME$$$$$