PB99-128662

College of Engineering
University of South Florida

Development of a New Concept For Florida's Bridges

Vol II - Appendices

R. Sen, S. Stroh, J. Oblinska, S. Hassiotis and G. Mullins
Department of Civil and Environmental Engineering

January 1999

College of Engineering
University of South Florida
4202 Fowler Avenue
Tampa, Florida 33620-5350

REPRODUCED BY: NTIS
U.S. Department of Commerce
National Technical Information Service
Springfield, Virginia 22161

Department of Civil and Environmental Engineering
The University of South Florida

Development of a New Concept For Florida's Bridges

Vol II - Appendices

R. Sen, S. Stroh, J. Oblinska, S. Hassiotis and G. Mullins
Department of Civil and Environmental Engineering

January 1999

A Report on a Research Project Sponsored by the
Florida Department of Transportation
Contract BB 522
Tampa, Florida

PROTECTED UNDER INTERNATIONAL COPYRIGHT
ALL RIGHTS RESERVED.
NATIONAL TECHNICAL INFORMATION SERVICE
U.S. DEPARTMENT OF COMMERCE

Appendix A

Tables with Bridge Deficiency Data

Table 1A. Deficiencies in bridges with superstructure type of concrete deck on steel plate girders.

Bridge Number	Deficiency Type	Bridge Age When Occurred	Deficient Component
100296	**I-275 NB ramp to SR-60 over SR-60, 0.2 miles North of I-275** **Environment: Severe** **Maximum span: 233.3 ft** **Year built: 1976** 12 inspections carried out every other year on the average, with last one carried out in 1995. Data was compiled from the records for 1977, 1979, 1981, 1983, 1984, 1985, 1987, 1988, 1990, 1992, 1994, 1995.		
	deterioration of rubberized hot poured sealant at joint #5	1	expansion joints
	spall, minor, at joint #1 filled with hot poured sealant (all except #2 & #10 which are sealed with steel reinforced elastomeric seal)	1	expansion joints
	water and small amount of fill material seep through joints between the approach slab and top of backwall	1	expansion joints
	spall, minor, at joint #5 filled with hot poured sealant (all this type, except #2 & #10 which are sealed with steel reinforced elastomeric seal)	1	expansion joints
	crack, minor, transverse	3	deck slab top
	paint, external coat is peeling off in patches leaving the primer coat visible	7	girders
	paint, external coat is peeling off in patches leaving the primer coat visible	7	diaphragms
	paint, external coat is peeling off in patches leaving the primer coat visible	7	bearings
	Corrosion, minor, visible under peeling off paint	7	girders
	Corrosion, minor, visible under peeling off paint	7	diaphragms
	Corrosion, minor, visible under peeling off paint	7	bearings

	crack, class I, transverse, spaced 3 [ft] to 6 [ft] apart, the length of span (typical for long span structure with steel beams and concrete deck)	7	deck slab underside
	crack, increased deterioration, class II, transverse, the length of span (typical for long span structure with steel beams and concrete deck)	7	deck slab top
	paint, external coat is peeling off in patches	7	diaphragms
	paint, external coat is peeling off in patches (especially bottom of beams and connector plates)	7	girders
	crack, class I, longitudinal	16	deck slab top
100354	**21st Ave over I-75, 4.4 miles North of Manatee CO** **Environment: Moderate** **Maximum span: 223.1 ft** **Year built: 1981** 10 inspections carried out every other year on the average with last one carried out in 1996. Data was compiled from the records for 1981, 1983, 1984, 1985, 1987, 1988, 1990, 1992, 1994, 1996.		
	crack, class I, six, transverse	0	deck slab underside
	crack, class I, transverse with efflorescence, in two spans	2	deck slab underside
	crack, class I, longitudinal, runs both sides through structure length 9" from inside edge of barrier wall	3	deck slab top
	spall, along construction joint	3	deck slab top
	crack, class I, transverse, in two spans	4	deck slab top
	spall, class II, 2 [ft] long	6	barrier wall
	crack, class I, transverse with efflorescence, in deck overhang on both sides of structure	9	deck slab underside
130090	**I-275 NB connector "A" over I-75, 5.3 [km] North of US-301** **Environment: Moderate** **Maximum span: 244.0 ft** **Year built: 1981** 11 inspections carried out every other year on the average with last one carried out in 1997. Data was compiled from the records for 1981, 1983, 1983, 1985, 1986, 1988, 1990, 1992, 1994, 1995, 1997.		
	loose joint seals at both abutments in several places not adhering to the armor (frequent condition for long continuous span and this joint type – abutment joint with 1.5 inch wide elastomeric compression seal)	0	expansion joints

	crack, several, class I, longitudinal	0	approach slab
	crack, new (5 ft), two, class II, longitudinal, contain spalls	4	approach slab
	loose armored joints allowing debris accumulation and leakage on abutment	4	expansion joints
	crack, several, class I, noted in majority of spans including overhangs	4	deck slab underside
	crack, several, class I, transverse, through entire deck width, contain spalls with exposed rebars	4	deck slab top
	crack, several, class I, longitudinal, along inside edges of exterior beams	4	deck slab top
	crack, class II, transverse, through entire deck width, contains spall	4	approach slab
	spall, no exposed bars	7	barrier wall
	Corrosion, minor	7	bearings
	Corrosion, moderate, bottom flange	9	girders
	spall, several spalled areas concentrated over beam #4	14	deck slab top
	spall, several spalled areas adjacent to previously patched areas, no exposed steel	16	deck slab top
150149	**I-275 SB over 31st Street South, 4.3 [km] North of SR-682** **Environment: Severe** **Maximum span: 232.9 ft** **Year built: 1980** 11 inspections carried out every other year on the average with last one carried out in 1997. Data was compiled from the records for 1981, 1983, 1984, 1984, 1986, 1988, 1990, 1991, 1993, 1995, 1997.		
	crack, several, class I, transverse, through entire deck width, in 2 ft to 4 ft intervals, (typical for deck construction using steel girders)	3	deck slab underside
	Crack, several, class V	3	approach slab
	Crack, several, class I, transverse, through entire deck width, in 2 ft to 4 ft intervals, (typical for deck construction using steel girders)	3	deck slab top
	Crack, several, class I, transverse	4	approach slab
	Crack, several, class I, diagonal	4	approach slab
	Crack, several, class III, diagonal	4	approach slab

	Crack, several, class I, longitudinal	4	approach slab
	Loose and clogged with incompressible material	4	expansion joints
	Spall, class II	4	barrier wall
	Crack, several, class I, diagonal, in 2 ft to 4 ft intervals	6	deck slab top
	Crack, several, class I, diagonal, in 2 ft to 4 ft intervals	6	deck slab underside
	Corrosion, light	6	bearings
	Loose elastomeric compression joints, due to deteriorated expansion joints material and incompressible material enters joints	8	expansion joints
	Corrosion, light to moderate	8	bearings
	Corrosion, moderate	10	girders
	Corrosion, moderate	10	bearings
	Crack, several, class I, transverse, through entire deck width, in 2 ft to 4 ft intervals, increasing number	11	deck slab top
	Crack, several, class I, transverse, through entire deck width, in 2 ft to 4 ft intervals, increasing number	11	deck slab underside
	Crack, several, class III, transverse	11	approach slab
	Deflection, in span 2 due to heavy traffic, noticeable	15	deck slab
	Spall, class II, at the construction joint	15	deck slab top
	Crack, several, class V, transverse	15	approach slab
	Paint, on exterior beams (outside face) faded due to exposure to sun	17	girders
	Corrosion, minor	17	bracing sway
	Paint, peeling of in isolated areas	17	bracing sway
	Paint, peeling of in isolated areas	17	bracing lateral
	Corrosion, minor	17	bracing lateral
150186	**I-275 SB ramp to SR-682 WB, at intersection of US-19 and SR-682** **Environment: Severe** **Maximum span: 229.0 ft** **Year built: 1984** 7 inspections carried out every other year on the average with last one carried out in 1996. Data was compiled from the records for 1985, 1987, 1988, 1990, 1992, 1994, 1996.		

	Crack, several, class II, transverse, (typical for concrete deck on steel girders construction)	1	deck slab underside
	crack, several, class II, transverse, (typical for concrete deck on steel girders construction)	1	deck slab top
	loose fourth section of expansion joint at abutment	4	expansion joints
	missing, sheared anchor bolts in several places	4	expansion joints
	spall, spalled epoxy grout (2 ft) along loose expansion joint (see photo)	4	expansion joints
	bearings leaning excessively and are in compression at both abutments (see sketch and photo)	4	bearings
	bottom flange of the girder sits incorrectly on bearing pad due to fabrication error or alignment error; (girders in continuous curve), (see sketch)	4	girders
	misalignment, one bearing has 2 inches transverse misalignment of the pads (see sketch)	4	bearings
	misalignment, two bearing has 2 inches transverse misalignment of the pads (see sketch)	6	bearings
	spall, increase in size (3.5 ft) of spalled epoxy grout along loose expansion joint (see photo)	6	expansion joints
	spall, several, minor, top of barrier	6	barrier wall
	paint, peeling off	8	girders
	missing nut and loose anchor bolt at one girder	8	girders
	spall, further increase in size (6 ft) of spalled epoxy grout along loose expansion joint (see photo), (previously required repairs not done)	10	expansion joints
	spall, further increase in size (7 ft) of spalled epoxy grout along loose expansion joint (see photo), (previously required repairs not done)	12	expansion joints
	loose sections at travel lane	14	expansion joints
	missing, anchor bolts sheared at two places	14	expansion joints
	steel plates exposed due to rubber deterioration, missing rubber cover over anchor bolt at several places	14	expansion joints
	paint, peeling off	14	girders
	missing, anchor bolt loose and missing cup	14	bearings

	missing, anchor bolts sheared at several places	14	bearings
150187	**SR-682 ramp to I-275 NB, 4.3 [km] North of US-19 and SR-682** **Environment: Severe** **Maximum span: 219.0 ft** **Year built: 1984** 7 inspections carried out every other year on the average with last one carried out in 1996. Data was compiled from the records for 1985, 1987, 1988, 1990, 1992, 1994, 1996.		
	crack, several, class I, transverse, (typical for concrete deck on steel girders construction)	1	deck slab underside
	crack, several, class I, transverse, (typical for concrete deck on steel girders construction)	1	deck slab top
	crack, class I, longitudinal	3	approach slab
	crack, several, class I, map, (typical for deck construction using steel girders)	3	deck slab top
	crack, class I, longitudinal, increased in size	4	approach slab
	paint, peeling off in isolated areas	6	girders
	paint, peeling off at several places, alligator cracking throughout structure	8	girders
	loose, compression seal loose in the armor joint at both abutments allowing enter of incompressible materials, spall of nosing grout of proprietary material causing rough transition to adjacent span	12	expansion joints
	asphalt overlay	14	approach slab
	crack, class III, longitudinal	14	approach slab
	corrosion, moderate, bottom flange, due to minor impact damage, two places	14	girders
	missing, several anchor nuts backed off, one anchor bolt missing (sheared off), one anchor bolt loose in cap and can be easily removed	14	bearings
	steel plates exposed due to rubber deterioration, missing rubber cover over anchor bolt at several places	14	expansion joints

150190	**I-275 SB over I-275 NB / US-19 SB, 0.2 miles North of SR-682** **Environment: Severe** **Maximum span: 229.0 ft** **Year built: 1987** 6 inspections carried out every other year on the average with last one carried out in 1996. Data was compiled from the records for 1987, 1989, 1991, 1993, 1994, 1996.		
	crack, several, class II, transverse, (typical for concrete deck on steel girders construction)	0	deck slab top
	crack, several, class II, transverse, (typical for concrete deck on steel girders construction)	0	deck slab underside
	spall, at expansion joint	4	barrier wall
	missing 21 inches of compression seal at one abutment	6	expansion joints
	spall, of nosing at intermediate elastomeric expansion dam	9	expansion joints
	missing compression seals at both abutment armor joints	9	expansion joints

Table 2A. Deficiencies in bridges with superstructure type of concrete deck on steel box girders.

Bridge Number	Deficiency Type	Bridge Age When Occurred	Deficient Component
100491	**I-75 NB collector ramp "E" over ramp "G", 1.7 miles S. of SR-60** **Environment: Moderate** **Maximum span: 264.1 ft** **Year built: 1985** 7 inspections carried out every other year on the average with last one carried out in 1996. Data was compiled from the records for 1986, 1987, 1988, 1990,1992, 1994, 1996.		
	paint, new construction defect - paint, thin finish coat	1	girders
	crack, several, class I, transverse	1	deck slab underside

	Misalignment, slipping out of alignments with misalignment between neoprene pads and steel plates, typical for this structure type, no movement noted	1	bearings
	crack, class I, transverse, through entire deck width	2	deck slab top
	crack, several, class II,	9	approach slab
	loose armored edge at abutment, loose compression seal at abutment is coming out in several locations	11	expansion joints
100498	**I-75 NB collector ramp "E" over ramp "B", 1.7 miles S. of SR-60** **Environment: Moderate** **Maximum span: 283.0 ft** **Year built: 1987** 5 inspections carried out every other year on the average with last one carried out in 1996. Data was compiled from the records for 1988, 1990,1992, 1994, 1996.		
	crack, class II, diagonal	3	approach slab
	spall, underside	9	approach slab
150204	**US-19 over Ulmerton Road, 7 [km] South of SR-60;** **Environment: Severe** **Maximum span: 228.0 ft** **Year built: 1990** 5 inspections carried out every other year on the average with last one carried out in 1996. Data was compiled from the records for 1990, 1991, 1993, 1994, 1996.		
	new construction defect - heavy seepage on the walls, bracing and floor inside of box girders, welds and bolts not cleaned and painted properly, caulking instead of welds at several places, debris in each girder	0	girder inside
	crack, several, class III, transverse, through entire deck width, in the mid-span areas	1	deck slab top
	loose armored edges on both abutments	3	expansion joints
	crack, several, class II, diagonal	3	deck slab top
	crack, several, class II, transverse, they follow substructure skew and are probably due to superstructure flexure	6	deck slab top
	missing access hole mounting hardware	6	girders
	0.5 in rise at approach slab to deck transition	6	roadway alignment
	crack, several, class III, at light pole mounts	6	deck slab median

	bearing anchor bolts loose	6	bearings
	spall, class I, edge of the deck along joint, seal distorted in both joints	6	expansion joints
	crack, several, class II, transverse, they follow substructure skew and are probably due to superstructure flexure	6	deck slab underside
	corrosion, light, in isolated locations	6	girder inside

Table 3A. Deficiencies in prestressed concrete bridges.

Bridge Number	Deficiency Type	Bridge Age When Occurred	Deficient Component
100585	**Gandy Bridge WB, over Tampa Bay** **Environment: Moderate** **Maximum span: 234.3 ft** **Year built: 1997** 1 inspections was available from 1997.		
	crack, new construction defect - cracks, four, class I, horizontal, appear on eight beams at two piers	0	girders (haunched)
	crack, new construction defect - cracks, one on each face at each end of beam, class I, diagonal, appear on eight beams at two piers	0	girders (haunched)
	rated 7 in scale from 0 to 9	0	bearings
	rated 7 in scale from 0 to 9	0	expansion joints
130112	**Connector "D" over I-75 and I-275, 1.0 [km] East of US-41** **Environment: Moderate** **Maximum span: 251.0 ft** **Year built: 1981** 11 inspections carried out every other year on the average with last one carried out in 1997. Data was compiled from the records for 1981, 1983, 1985, 1985, 1986, 1988, 1990,1992, 1994, 1996, 1997.		

	loose elastomeric compression seal in all six joints of this type, opening between armor and silling material varies from 4.5 inch to 0.2 inch	0	expansion joints
	loose, new construction defect - six joints armored with elastomeric compression seal have loose places between seal and armor (appear as typical condition for this type of joints and long continuous spans)	0	expansion joints
	crack, new construction defect - cracks, several, class I, transverse, in all spans, 2 inch to 4 inch each side of joints and 6 ft to10 ft away from joints	0	deck slab top
	crack, new construction defect - cracks, several, class I, transverse, in all spans, uniformly located over piers in continuous pours	0	deck slab top
	crack, several, class I, longitudinal, in all spans, mostly located over beam flanges (outside edge) and at prestressed deck panel joints	2	deck slab top
	crack, several, class I, transverse, in all spans, mostly located over beam flanges and at prestressed deck panel joints	2	deck slab top
	spall, several, new, with minor areas of exposed steel	16	deck slab top
	loose elastomeric compression seal in all joints	16	expansion joints
	crack, several, class I, map, in all spans	16	deck slab top
	crack, several, class II, transverse, in all spans	16	deck slab top
	spall, respallings of previously repaired spalls, several, no exposed steel	16	deck slab top
	crack, several, class II, longitudinal, in all spans, mostly located over beam flanges	16	deck slab top
	corrosion, moderate	16	bearings
	crack, several, diagonal, on each end of most beams, at interface of top flange and web	16	girders
150189	**I-275 Skyway Bridge, 5 miles South of Pinellas Bayway;** **Environment: Severe** **Maximum span: 540.0 ft** **Year built: 1986** 8 inspections carried out every other year on the average with last one carried out in 1996. Data was compiled from the records for 1987, 1988, 1990, 1991, 1992, 1994, 1994, 1996.		
	bulging, excessive, and splitting of pad sides, it con be symptoms of excessive deformation or deficiencies in manufacturing	5	bearings

	misalignment, several composite neoprene bearing has misalignment of the pads, condition noted in 1989 increased now substantially	5	bearings
	missing compression seal, several	6	expansion joints
	loose compression seal, several	6	expansion joints
	cracks, class I, random, vertical, in walls of segments, condition noted in1989 appears unchanged	6	girder outside
	cracks, class I, random, longitudinal, underside of segments, condition noted in1989 appears unchanged	6	girder outside
	cracks, class IV, on deviation blocks, diaphragms, floor struts and diagonal struts; condition noted in1989 appears unchanged	6	girder inside
	cracks, class I, random, longitudinal, throughout segments	6	girder inside
	cracks, class I, random, transverse, throughout segments	6	girder inside
	corrosion, some bearing pads exhibit exposed edges of the metal with signs of light corrosion	6	bearings
	spall, several, along segment joints	6	deck slab top
	leaks into the concrete box through match cast joints at small segments and though electrical junction boxes and stay cables at large segments; condition noted in 1989 appears unchanged	6	girder inside
	cracks, class I, random, diagonal, throughout segments	6	girder inside
	crack, class II, several, transverse, along the construction joints	8	deck slab top
150224	**4th Street exit ramp from I-275 SB, 0.5 mile S. of Howard Franklin** **Environment: Moderate** **Maximum span: 208.0 ft** **Year built: 1995** 1 inspection in 1995		
	crack, new construction defect - cracks, several, class I, transverse - beginning at access hatches on each end and extending 75 ft to 100 ft into the structure	0	girder inside

Table 4A. Deficient components in the steel bridges with plate girder design type.

Deficient Component	Number of Deficiencies	Percent of deficiencies [%]
deck slab	30	29.1
expansion joints	22	21.4
approach slab	14	13.6
main girders	13	12.6
bearings	12	11.6
barrier walls	5	4.9
bracing	4	3.9
diaphragms	3	2.9
Total	103	100%

Table 5A. Deficient components in the steel bridges with box girder design type.

Deficient Component	Number of Deficiencies	Percent of deficiencies [%]
deck slab	7	35.0
main girders	4	20.0
approach slab	3	15.0
expansion joints	3	15.0
bearings	2	10.0
roadway alignment	1	5.0
Total	20	100%

Table 6A. Deficient components in the prestressed concrete bridges.

Deficient Component	Number of Deficiencies	Percent of deficiencies [%]
deck slab	11	33.3
main girders	11	33.3
expansion joints	6	18.2
bearings	5	15.2
Total	33	100%

Table 7A. Deficiency types in the steel bridges with plate girder design type.

No.	Deficiency Type	Deficient Component
1	asphalt overlay	approach slab
2	bearings leaning excessively and are in compression at both abutments (see sketch and photo)	bearings
3	bottom flange of the girder sits incorrectly on bearing pad due to fabrication error or alignment error; (girders in continuous curve), (see sketch)	girders
4	corrosion, light	bearings
5	corrosion, light to moderate	bearings
6	corrosion, minor	bearings
7	corrosion, minor	bracing lateral
8	corrosion, minor	bracing sway
9	corrosion, minor, visible under peeling off paint	girders
10	corrosion, minor, visible under peeling off paint	diaphragms
11	corrosion, minor, visible under peeling off paint	bearings
12	corrosion, moderate	bearings
13	corrosion, moderate	girders
14	corrosion, moderate, bottom flange	girders
15	corrosion, moderate, bottom flange, due to minor impact damage, two places	girders
16	crack, class I, longitudinal	approach slab
17	crack, class I, longitudinal	deck slab top
18	crack, class I, longitudinal, increased in size	approach slab
19	crack, class I, longitudinal, runs both sides through structure length 9" from inside edge of barrier wall	deck slab top
20	crack, class I, six, transverse	deck slab
21	crack, class I, transverse with efflorescence, in deck overhang on both sides of structure	deck slab underside
22	crack, class I, transverse with efflorescence, in two spans	deck slab
23	crack, class I, transverse, in two spans	deck slab top
24	crack, class I, transverse, spaced 3 [ft] to 6 [ft] apart, the length of span (typ. for long span structure with steel beams and concrete deck)	deck slab underside
25	crack, class II, transverse, through entire deck width, contains spall	approach slab
26	crack, class III, longitudinal	approach slab
27	crack, increased deterioration, class II, transverse, the length of span (typ. for long span structure with steel beams and concrete deck)	deck slab top
28	crack, minor, transverse	deck slab top
29	crack, new (5 ft), two, class II, longitudinal, contain spalls	approach slab
30	crack, several, class I, diagonal	approach slab
31	crack, several, class I, diagonal, in 2 ft to 4 ft intervals	deck slab top
32	crack, several, class I, diagonal, in 2 ft to 4 ft intervals	deck slab
33	crack, several, class I, longitudinal	approach slab
34	crack, several, class I, longitudinal	approach slab
35	crack, several, class I, longitudinal, along inside edges of exterior beams	deck slab top
36	crack, several, class I, map, (typical for deck construction using steel girders)	deck slab top

37	crack, several, class I, noted in majority of spans including overhangs	deck slab
38	crack, several, class I, transverse	approach slab
39	crack, several, class I, transverse, (typical for concrete deck on steel girders construction)	deck slab underside
40	crack, several, class I, transverse, (typical for concrete deck on steel girders construction)	deck slab top
41	crack, several, class I, transverse, through entire deck width, contain spalls with exposed rebars	deck slab top
42	crack, several, class I, transverse, through entire deck width, in 2 ft to 4 ft intervals, (typical for deck construction using steel girders)	deck slab top
43	crack, several, class I, transverse, through entire deck width, in 2 ft to 4 ft intervals, (typical for deck construction using steel girders)	deck slab underside
44	crack, several, class I, transverse, through entire deck width, in 2 ft to 4 ft intervals, increasing number	deck slab top
45	crack, several, class I, transverse, through entire deck width, in 2 ft to 4 ft intervals, increasing number	deck slab underside
46	crack, several, class II, transverse, (typical for concrete deck on steel girders construction)	deck slab top
47	crack, several, class II, transverse, (typical for concrete deck on steel girders construction)	deck slab top
48	crack, several, class II, transverse, (typical for concrete deck on steel girders construction)	deck slab underside
49	crack, several, class II, transverse, (typical for concrete deck on steel girders construction)	deck slab underside
50	crack, several, class III, diagonal	approach slab
51	crack, several, class III, transverse	approach slab
52	crack, several, class V	approach slab
53	crack, several, class V, transverse	approach slab
54	deflection, in span 2 due to heavy traffic, noticeable	deck slab
55	deterioration of rubberized hot poured sealant at joint #5	expansion joints
56	loose and clogged with incompressible material	expansion joints
57	loose armored joints allowing debris accumulation and leakage on abutment	expansion joints
58	loose elastomeric compression joints, due to deteriorated expansion joints material and incompressible material enters joints	expansion joints
59	loose fourth section of expansion joint at abutment	expansion joints
60	loose joint seals at both abutments in several places not adhering to the armor (frequent condition for long continuous span and this joint type - abutment joint with 1.5 inch wide elastomeric compression seal)	expansion joints
61	loose sections at travel lane	expansion joints
62	loose, compression seal loose in the armor joint at both abutments allowing enter of incompressible materials, spall of nosing grout of proprietary material causing rough transition to adjacent span	expansion joints
63	misalignment, one bearing has 2 inches transverse misalignment of the pads (see sketch)	bearings
64	misalignment, two bearing has 2 inches transverse misalignment of the pads (see sketch)	bearings
65	missing 21 inches of compression seal at one abutment	expansion joints
66	missing compression seals at both abutment armor joints	expansion joints
67	missing nut and loose anchor bolt at one girder	girders
68	missing, anchor bolt loose and missing cup	bearings

69	missing, anchor bolts sheared at several places	bearings
70	missing, anchor bolts sheared at two places	expansion joints
71	missing, several anchor nuts backed off, one anchor bolt missing (sheared off), one anchor bolt loose in cap and can be easily removed	bearings
72	missing, sheared anchor bolts in several places	expansion joints
73	paint, external coat is peeling off in patches	diaphragms
74	paint, external coat is peeling off in patches (especially bottom of beams and connector plates)	girders
75	paint, external coat is peeling off in patches leaving the primer coat visible	bearings
76	paint, external coat is peeling off in patches leaving the primer coat visible	girders
77	paint, external coat is peeling off in patches leaving the primer coat visible	diaphragms
78	paint, on exterior beams (outside face) faded due to exposure to sun	girders
79	paint, peeling of in isolated areas	bracing sway
80	paint, peeling of in isolated areas	bracing lateral
81	paint, peeling off	girders
82	paint, peeling off	girders
83	paint, peeling off at several places, alligator cracking throughout structure	girders
84	paint, peeling off in isolated areas	girders
85	spall, along construction joint	deck slab top
86	spall, at expansion joint	barrier wall
87	spall, class II	barrier wall
88	spall, class II, 2 [ft] long	barrier wall
89	spall, class II, at the construction joint	deck slab top
90	spall, further increase in size (6 ft) of spalled epoxy grout along loose expansion joint (see photo), (previously required repairs not done)	expansion joints
91	spall, further increase in size (7 ft) of spalled epoxy grout along loose expansion joint (see photo), (previously required repairs not done)	expansion joints
92	spall, increase in size (3.5 ft) of spalled epoxy grout along loose expansion joint (see photo)	expansion joints
93	spall, minor, at joint #1 filled with hot poured sealant (all except #2 & #10 which are sealed with steel reinforced elastomeric seal)	expansion joints
94	spall, minor, at joint #5 filled with hot poured sealant (all this type, except #2 & #10 which are sealed with steel reinforced elastomeric seal)	expansion joints
95	spall, no exposed bars	barrier wall
96	spall, of nosing at intermediate elastomeric expansion dam	expansion joints
97	spall, several spalled areas adjacent to previously patched areas, no exposed steel	deck slab top
98	spall, several spalled areas concentrated over beam #4	deck slab top
99	spall, several, minor, top of barrier	barrier wall
100	spall, spalled epoxy grout (2 ft) along loose expansion joint (see photo)	expansion joints
101	steel plates exposed due to rubber deterioration, missing rubber cover over anchor bolt at several places	expansion joints
102	steel plates exposed due to rubber deterioration, missing rubber cover over anchor bolt at several places	expansion joints
103	water and small amount of fill material seep through joints between the approach slab and top of backwall	expansion joints

Table 8A. Deficiency types in the steel bridges with box-girder design type.

No.	Deficiency Type	Deficient Component
1	0.5 [in] rise at approach slab	roadway
2	bearing anchor bolts loose	bearings
3	corrosion, light, in isolated locations	girder inside
4	crack, class I, transverse, through entire deck width	deck slab top
5	crack, class II, diagonal	approach slab
6	crack, several, class I, transverse	deck slab
7	crack, several, class II,	approach slab
8	crack, several, class II, diagonal	deck slab top
9	crack, several, class II, transverse, they follow substructure skew and are probably due to superstructure flexure	deck slab top
10	crack, several, class II, transverse, they follow substructure skew and are probably due to superstructure flexure	deck slab underside
11	crack, several, class III, at light pole mounts	deck slab
12	crack, several, class III, transverse, through entire deck width, in the mid-span areas	deck slab top
13	loose armored edge at abutment, loose compression seal at abutment is coming out in several locations	expansion joints
14	loose armored edges on both abutments	expansion joints
15	misalignment, slipping out of alignments with misalignment between neoprene pads and steel plates, typical for this structure type, no movement noted	bearings
16	missing access hole mounting hardware	girders
17	new construction defect - heavy seepage on the walls, bracing and floor inside of box girders, welds and bolts not cleaned and painted properly, caulking instead of welds at several places, debris in each girder	girder inside
18	paint, new construction defect - paint, thin finish coat	girders
19	spall, class I, edge of the deck along joint, seal distorted in both joints	expansion joints
20	spall, underside	approach slab

Table 9A. Deficiency types in the prestressed concrete bridges.

No.	Deficiency Type	Deficient Component
1	rated 7 in scale from 0 to 9	expansion joints
2	rated 7 in scale from 0 to 9	bearings

3	bulging, excessive, and splitting of pad sides, it can be symptoms of excessive deformation or deficiencies in manufacturing	bearings
4	corrosion, moderate	bearings
5	corrosion, some bearing pads exhibit exposed edges of the metal with signs of light corrosion	bearings
6	crack, class II, several, transverse, along the construction joints	deck slab top
7	crack, new construction defect - cracks, four, class I, horizontal, appear on eight beams at two piers	girders (haunched)
8	crack, new construction defect - cracks, one on each face at each end of beam, class I, diagonal, appear on eight beams at two piers	girders (haunched)
9	crack, new construction defect - cracks, several, class I, transverse, in all spans, 2 inch to 4 inch each side of joints and 6 ft to10 ft away from joints	deck slab top
10	crack, new construction defect - cracks, several, class I, transverse, in all spans, uniformly located over piers in continuous pours	deck slab top
11	crack, new construction defect - cracks, several, class I, transverse - beginning at access hatches on each end and extending 75 ft to 100 ft into the structure	girder inside
12	crack, several, class I, longitudinal, in all spans, mostly located over beam flanges (outside edge) and at prestressed deck panel joints	deck slab top
13	crack, several, class I, map, in all spans	deck slab top
14	crack, several, class I, transverse, in all spans, mostly located over beam flanges and at prestressed deck panel joints	deck slab top
15	crack, several, class II, longitudinal, in all spans, mostly located over beam flanges	deck slab top
16	crack, several, class II, transverse, in all spans	deck slab top
17	crack, several, diagonal, on each end of most beams, at interface of top flange and web	girders
18	cracks, class I, random, diagonal, throughout segments	girder inside
19	cracks, class I, random, longitudinal, throughout segments	girder inside
20	cracks, class I, random, longitudinal, underside of segments, condition noted in 1989 appears unchanged	girder outside
21	cracks, class I, random, transverse, throughout segments	girder inside
22	cracks, class I, random, vertical, in walls of segments, condition noted in 1989 appears unchanged	girder outside
23	cracks, class IV, on deviation blocks, diaphragms, floor struts and diagonal struts; condition noted in1989 appears unchanged	girder inside
24	leaks into the concrete box through match cast joints at small segments and though electrical junction boxes and stay cables at large segments; condition noted in 1989 appears unchanged	girder inside
25	loose compression seal, several	expansion joints
26	loose elastomeric compression seal in all joints	expansion joints
27	loose elastomeric compression seal in all six joints of this type, opening between armor and silling material varies from 4.5 inch to 0.2 inch	expansion joints
28	loose, new constr. defect - six joints armored with elastomeric compression seal have loose places between seal and armor (appear as typical condition for this type of joints and long continuous spans)	expansion joints
29	misalignment, several composite neoprene bearing has misalignment of the pads, condition noted in 1989 increased now substantially	bearings

30	missing compression seal, several	expansion joints
31	spall, respalings of previously repaired spalls, several, no exposed steel	deck slab top
32	spall, several, along segment joints	deck slab top
33	spall, several, new, with minor areas of exposed steel	deck slab top

Appendix B

Pictures and Sketches of Detected Bridge Deficiencies

Table 1B. FDOT concrete crack width dimension classes.

CRACK WIDTH (CW) DIMENSION RANGES AND CLASSES	
CLASS	WIDTH RANGE
1.	0 < CW < 1/64" (0.4mm)
2.	1/64" (0.4mm) > CW < 1/32" (0.8mm)
3.	1/32" (0.8mm) > CW < 1/16" (1.6mm)
4.	1/16" (1.6mm) > CW < 1/8" (3.2mm)
5.	CW ≥ 1/8" (3.2mm)

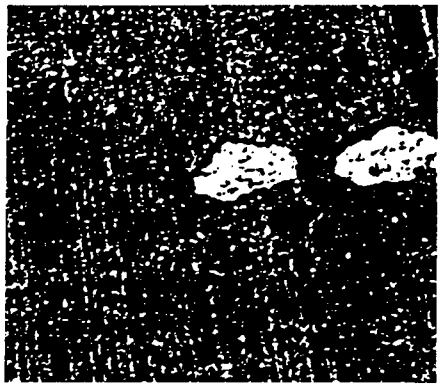

DECK SPALL - NO VISIBLE REBARS

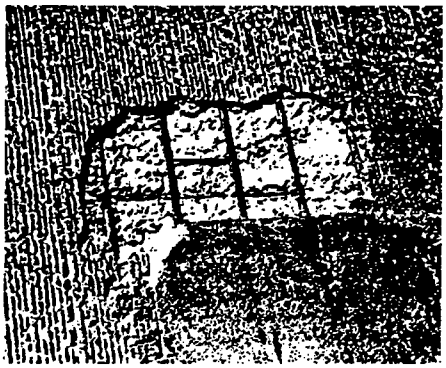

DECK SPALL WITH VISIBLE REBARS

Figure 2B. Concrete deck spalls examples.

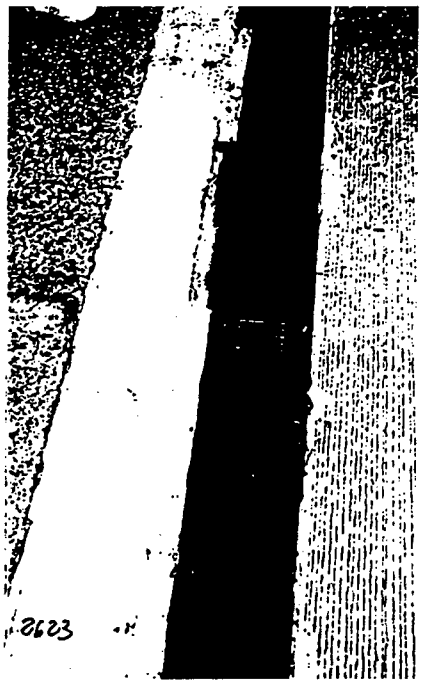

SPALL AT ELASTOMERIC EXPANSION JOINT

PROGRESING SPALL AT ELASTOMERIC EXPANSION JOINT

Figure 3B. Examples of concrete spalls at expansion joint.

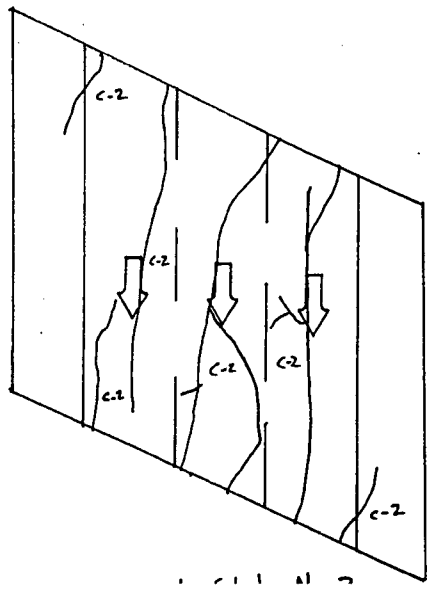

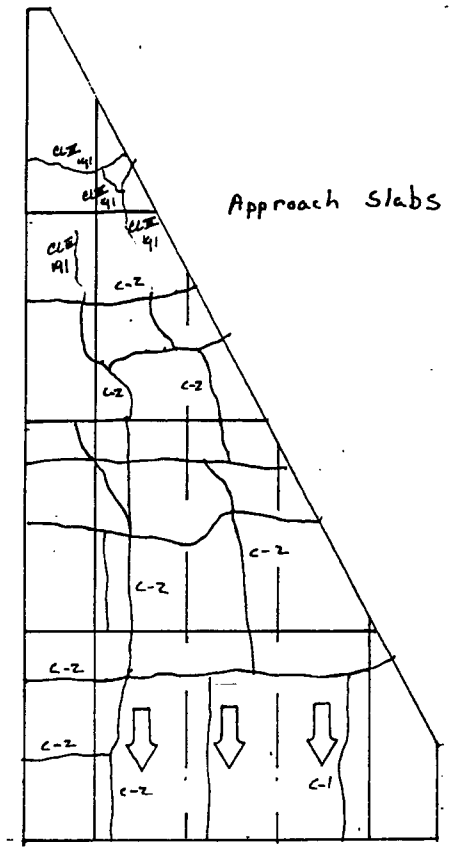

APPROACH SLABS CRACKING AT BRIDGE #150149

Figure 4B. Approach slab concrete cracking examples.

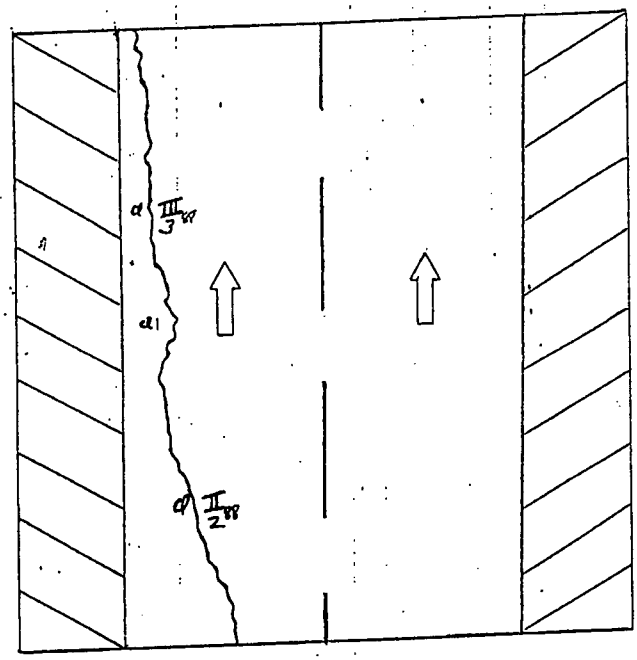

LONGITUDINAL CRACK OF BRIDGE #150187 APPROACH SLAB

Figure 5B. Longitudinal crack at the approach slab.

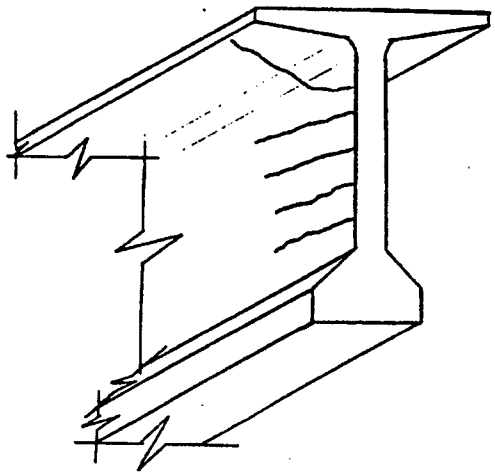

CLASS I CRACKING IN BEAM END – BRIDGE #100585

Figure 6B. Concrete girder cracking example.

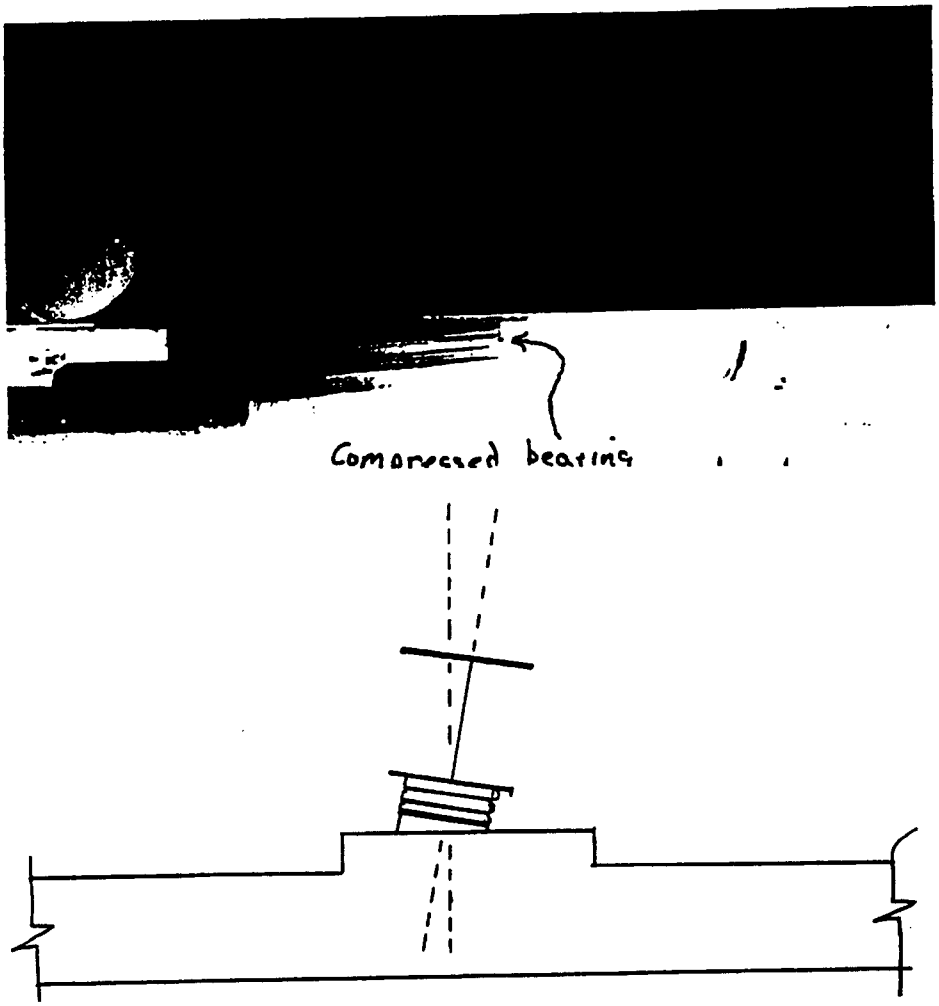

INCORRECT BEARING POSITION AT EACH ABUTMENT CAUSING NON-UNIFORM COMPRESSION OF THE BEARING PADS - BRIDGE # 150186

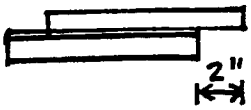

TRANSVERSE MISALIGNMENT OF THE BEARING PADS

Figure 7B. Bearing misalignment example.

Appendix C

Design Criteria and Cost Basis

STEEL BRIDGES WITH DOUBLE COMPOSITE ACTION

DESIGN CRITERIA

1. GENERAL DESCRIPTION

1.1 Span Layout: Investigation to be based on a representative three-span continuous structure with spans of 65m/100m/65m. The bridge is on a tangent alignment with supports normal to the bridge centerline.

1.2 Typical Section: Investigation based on a 13.4 m wide cross section. The designs are developed with a four girder cross section for plate girders, and a two girder system for box girders. Structure depth to be optimized within each alternative.

1.3 The designs shall be developed in metric units.

2. DESIGN CODES AND DESIGN METHOD

2.1 Design shall be in general accordance with the AASHTO LRFD Specifications for Highway Bridges, 1994 version (metric) with interim specifications through 1997.

2.2 Design shall be developed in general accordance with the FDOT *Structures Design Guidelines*, 01 July 1997 Edition.

2.3 Creep and Shrinkage shall be considered in accordance with the CEB/FIP Model Code for Concrete Structures, 1990 edition.

3. MATERIALS

3.1 "Standard" Structural Steel shall be ASTM A709M Gr. 345 (345 MPa).
"High Strength" Structural Steel shall be ASTM A709 Gr. 485 (485 MPa).

3.2 Concrete slabs shall be f'c=28 MPa. Florida limerock aggregate is assumed with a modulus of elasticity of 22.8 GPa.

3.3 Reinforcing Steel shall be ASTM A615M Grade 420.

3.4 Post-Tensioning shall be ASTM A416 15.2 mm diameter Grade 1860 low relaxation strands conforming to the following:

Apparent modulus of elasticity	190,000 MPa
Maximum jacking stress at the anchorage	0.8 f's
Max. Jacking stress at the anchorage immediately after anchorage	0.7 f's
Max. anchorage stress at internal locations immediately after anchorage	0.83 f*y ≤ 0.74 f's
Anchor set	6 mm
Friction coefficient (μ) for rigid pipe deviators for external tendons	0.25
Wobble Coefficient (k):	
External tendons in polyethylene duct	0.0
Rigid steel pipe deviators for external tendons	0.0007 /m

4. LOADING

4.1 Dead Loads

Unit weight of reinforced concrete	23.6 kN/m^3
Unit weight of structural steel	77.0 kN/m^3
Allowance for future wearing surface	1.0 kN/m^2
Allowance for stay-in-place forms	1.0 kN/m^2
Traffic barriers (each)	5.7 kN/m

4.2 Live Loads: HL93

4.3 Fatigue: Fatigue resistance is assumed to be governed by one-half of the constant-amplitude fatigue threshold.

4.4 Creep and Shrinkage: Strains are calculated in accordance with ceb/fip Model Code for Concrete Structures, 1990 with relative an assumed humidity of 75%.

5. UNIT COSTS

The various bridge alternatives will be compared on a first-cost basis using the unit costs shown in Table 1.

Table 1 - Unit Costs

ITEM	UNITS	UNIT COST	REMARKS
Structural Steel (Gr. 345) (Plate Girder)	kg	$2.20	Fabricate and erect
Structural Steel (Gr. 345) (Box Girder)	kg	$2.40	Fabricate and erect
Structural Steel (Gr.485) (Plate Girder)	kg	$2.42	Fabricate and erect
Structural Steel (Gr.485) (Box Girder)	kg	$2.64	Fabricate and erect
Deck Concrete	m^3	$557	
Bottom Slab Concrete (Plate Girder - formed)	m^3	$400	Not Screeded
Bottom Slab Concrete (Box Girder - unformed)	m^3	$330	Not Screeded
Reinforcing Steel	kg	$1.00	
Post Tensioning Tendons (Longitudinal)	kg	$2.72	
Pot Bearings	kN	$0.90	
Traffic Railing Barrier	m	$72.00	

Appendix D

"Conventional" Bridge Design Calculations

THREE-SPAN, CONTINUOUS PLATE GIRDER BRIDGE DESIGN OF THE POSITIVE FLEXURE SECTION

1. CONSTANTS AND UNITS:

Acceleration of gravity constant $g = 9.8066 \cdot m \cdot sec^{-2}$

$ft := 12 \cdot in$

$in := 25.4 \cdot mm$ $\quad ft = 0.3048 \cdot m$

$lbm := 0.4536 \cdot kg$

$lb := 0.4536 \cdot kg \cdot g$ $\quad lb = 4.4483 \cdot newton$

$kN := 1000 \cdot newton$ $\quad kPa := 1000 \cdot Pa$ $\quad MPa := 1000000 \cdot Pa$

$\frac{lb}{in^2} = 6894.8733 \cdot Pa$ $\quad \frac{lb}{in^2} = 6.8949 \cdot kPa$

2. GIVEN REQUIREMENTS:

Number of girders: $N_g := 4$

Number of spans: $N_{sp} := 3$

Length of middle span: $L_2 := 100.0 \cdot m$

Length of side span (equal length): $L_1 := 65.0 \cdot m$ $\quad L_3 := 65 \cdot m$

Girder spacing: $GS := 3.7 \cdot m$

Roadway width: $RW := 12.6 \cdot m$

Concrete deck thickness (structural): $T_c := 0.23 \cdot m$

Concrete deck overhang: $OH_c := 1.15 \cdot m$

Sidewalk: NONE

Haunch thickness: $t_h := 3 \cdot in$ $\quad t_h = 0.0762 \cdot m$

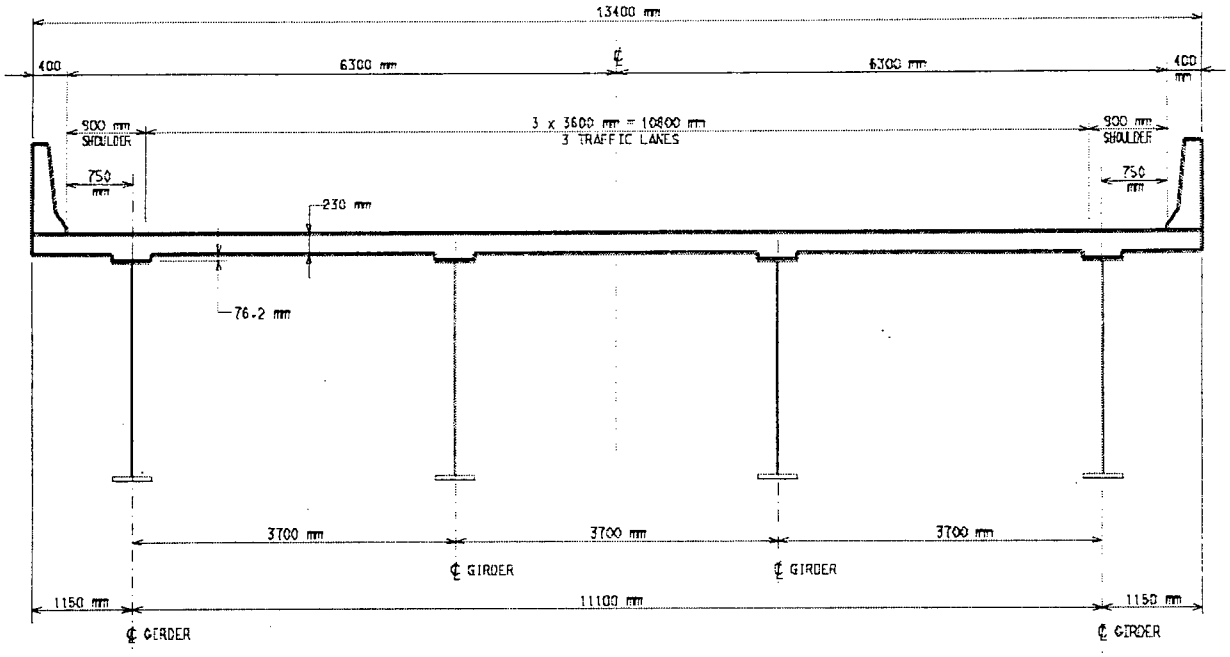

TYPICAL BRIDGE CROSS-SECTION

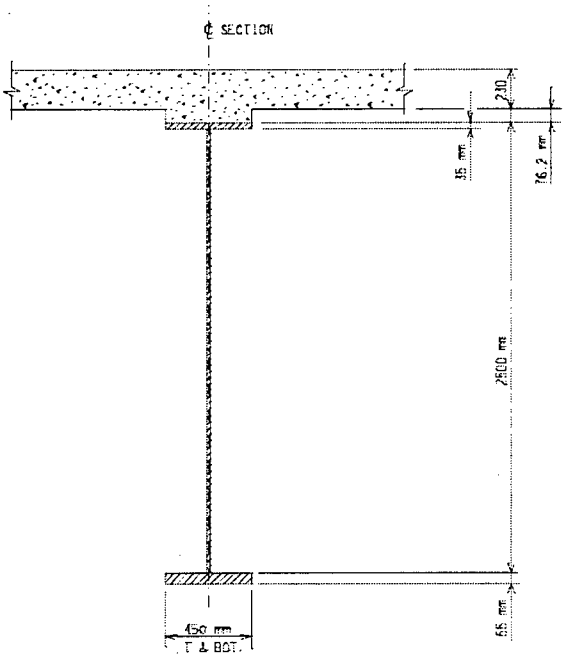

PRELIMINARY GIRDER SECTION

3. MATERIALS:

Structural steel: AASHTO M270, Grade 345 (ASTM A709M, Grade 345):

$F_y := 345 \cdot MPa$ $\quad \gamma_s := 7850 \cdot \frac{kg}{m^3}$ $\quad \gamma_s \cdot g = 76.9822 \cdot \frac{kN}{m^3}$ $\quad E_s := 200000 \cdot MPa$

Slab reinforcing steel: AASHTO ?, Grade ? (ASTM ?, Grade ?):

$f_y := 420 \cdot MPa$

Concrete: standard normal-weight, with weight density γ_c:

$f_c := 28 \cdot MPa$ $\quad \gamma_c := 2400 \cdot \frac{kg}{m^3}$ $\quad \gamma_c \cdot g = 23.536 \cdot \frac{kN}{m^3}$

$E_c := 4800 \cdot \sqrt{f_c} \cdot \sqrt{MPa}$ $\quad E_c = 25399 \cdot MPa$

Stay-in-place forms surface area density (closed-section, metal, including fill-in concrete):

$\gamma_{sip} := \frac{20 \cdot \frac{lb}{ft^2}}{g}$ $\quad \gamma_{sip} = 97.6502 \cdot \frac{kg}{m^2}$

Future wearing surface, with surface area density γ_a:

$\gamma_{ws} := \frac{1.0 \cdot \frac{kN}{m^2}}{g}$ $\quad \gamma_{ws} = 101.9716 \cdot kg \cdot m^{-2}$

Barrier: Jersey with bottom width b_{barr} = 400 [mm] and with mass per unit length of each barrier m_{barr}:

$m_{barr} := \frac{5.7 \cdot \frac{kN}{m}}{g}$ $\quad m_{barr} = 581.2382 \cdot kg \cdot m^{-1}$ $\quad b_{barr} := 0.4 \cdot m$

4. PRELIMINARY GIRDER DIMENSIONS:

a.) Top flange:

$t_{tf} := 0.035 \cdot m$

$b_{tf} := 0.45 \cdot m$

b.) Bottom flange:

$t_{bf} := 0.055 \cdot m$

$b_{bf} := 0.45 \cdot m$

c.) Web:

$t_w := 0.018 \cdot m$

$h_w := 2.5 \cdot m$

d.) Total section:

$A_{tf} := b_{tf} \cdot t_{tf}$

$A_{tf} = 0.0158 \cdot m^2$

$A_{bf} := b_{bf} \cdot t_{bf}$

$A_{bf} = 0.0248 \cdot m^2$

$A_w := t_w \cdot h_w$

$A_w = 0.045 \cdot m^2$

$A_{sec} := A_{tf} + A_{bf} + A_w$

$A_{sec} = 0.0855 \cdot m^2$

5. DEAD LOADING CALCULATIONS (PER GIRDER):

Non-composite dead load (DC_1):

$SLAB := T_c \cdot GS \cdot \gamma_c \cdot g$ $\qquad SLAB = 20.0291 \cdot \frac{kN}{m}$

$HAUNCH := b_{tf} \cdot t_h \cdot \gamma_c \cdot g$ $\qquad HAUNCH = 0.807 \cdot \frac{kN}{m}$

$SIP := (GS - b_{tf}) \cdot \gamma_{sip} \cdot g$ $\qquad SIP = 3.1123 \cdot \frac{kN}{m}$

$GIRDER_{prel} := A_{sec} \cdot \gamma_s \cdot g$ $\qquad GIRDER_{prel} = 6.582 \cdot \frac{kN}{m}$

$DC_1 := SLAB + HAUNCH + SIP + GIRDER_{prel}$ $\qquad DC_1 = 30.5304 \cdot \frac{kN}{m}$

Long-term composite dead load (DC_2):

$BARRIER := \frac{m_{barr} \cdot g \cdot 2}{4}$ $\qquad$ (equally distributed to each girde)

$BARRIER = 2.85 \cdot \frac{kN}{m}$ $\qquad DC_2 := BARRIER$

$DC_2 = 2.85 \cdot \frac{kN}{m}$

Total DC:

$DC := DC_1 + DC_2$ $\qquad DC = 33.3804 \cdot \frac{kN}{m}$

Long-term composite dead load (DW):

$$FWS := \frac{\gamma_{ws} \cdot g \cdot RW}{4}$$ (equally distributed to each girder)

$$FWS = 3.15 \cdot \frac{kN}{m}$$ $$DW := FWS$$

$$DW = 3.15 \cdot \frac{kN}{m}$$

Summary of dead loading calculations:

$$DC_1 = 30.5304 \cdot \frac{kN}{m} \qquad DC_2 = 2.85 \cdot \frac{kN}{m} \qquad DW = 3.15 \cdot \frac{kN}{m}$$

The overhang span of 1150 [mm] is less than one half the girder spacing distance ($\frac{GS}{2} = 1850$) ; n therefore, the exterior girder would not control.

6. SECTION PROPERTIES - POSITIVE MOMENT:

Dimensions of the preliminary girder section were changed to the following:

Non-composite section properties (n = ∞):

a.) Top flange:

$t_{tf} := 53 \cdot mm$

$b_{tf} := 450 \cdot mm$

$A_{tf} := b_{tf} \cdot t_{tf}$

$A_{tf} = 23850 \cdot mm^2$

b.) Bottom flange:

$t_{bf} := 73 \cdot mm$

$b_{bf} := 450 \cdot mm$

$A_{bf} := b_{bf} \cdot t_{bf}$

$A_{bf} = 32850 \cdot mm^2$

c.) Web:

$t_w := 18 \cdot mm$

$h_w := 2500 \cdot mm$

$A_w := t_w \cdot h_w$

$A_w = 45000 \cdot mm^2$

Distance from x axis (bottom of the whole section) to the item center of gravity - y1

$y1_{tf} := t_{bf} + h_w + 0.5 \cdot t_{tf}$

$y1_{tf} = 2599.5 \cdot mm$

$y1_{bf} := 0.5 \cdot t_{bf}$

$y1_{bf} = 36.5 \cdot mm$

$y1_w := t_{bf} + 0.5 \cdot h_w$

$y1_w = 1323 \cdot mm$

$I_{0tf} := \frac{b_{tf} \cdot t_{tf}^3}{12}$

$I_{0tf} = 5.5829 \cdot 10^6 \cdot mm^4$

$I_{0bf} := \frac{b_{bf} \cdot t_{bf}^3}{12}$

$I_{0bf} = 1.4588 \cdot 10^7 \cdot mm^4$

$I_{0w} := \frac{t_w \cdot h_w^3}{12}$

$I_{0w} = 2.3438 \cdot 10^{10} \cdot mm^4$

$\Sigma A_s := A_{tf} + A_{bf} + A_w$

$\Sigma A_s = 101700 \cdot mm^2$

$\Sigma Ay1 := A_{tf} \cdot y1_{tf} + A_{bf} \cdot y1_{bf} + A_w \cdot y1_w$

$\Sigma Ay1 = 1.2273 \cdot 10^8 \cdot mm^3$

$\Sigma I_0 := I_{0tf} + I_{0bf} + I_{0w}$

$\Sigma I_0 = 2.3458 \cdot 10^{10} \cdot mm^4$

Distance from bottom of section to the neutral axis (N.A.) of whole section - Y_{sb}

$Y_{sb} := \frac{\Sigma Ay1}{\Sigma A_s}$

$Y_{sb} = 1206.8053 \cdot mm$

Distance from top of steel to the neutral axis (N.A.) of whole section - Y_{st}

$Y_{st} := (t_{tf} + h_w + t_{bf}) - Y_{sb}$

$Y_{st} = 1419.1947 \cdot mm$

Distance between item center of gravity and N.A. of whole section - y2

$y2_w := y1_w - Y_{sb}$

$y2_w = 116.1947 \cdot mm$

$y2_{bf} := Y_{sb} - y1_{bf}$

$y2_{bf} = 1170.3053 \cdot mm$

$y2_{tf} := (t_{bf} + h_w + 0.5 \cdot t_{tf}) - Y_{sb}$

$y2_{tf} = 1392.6947 \cdot mm$

Moment of inertia of whole steel section in respect to N.A. of whole section - I_s

$I_s := \Sigma I_0 + A_{tf} \cdot y2_{tf}^2 + A_{bf} \cdot y2_{bf}^2 + A_w \cdot y2_w^2$ $\qquad I_s = 1.1532 \cdot 10^{11} \cdot mm^4$

Section modulus of steel section at extreme fibers:

$S_{top} := \frac{I_s}{Y_{st}}$ $\qquad S_{bot} := \frac{I_s}{Y_{sb}}$

$S_{top} = 8.1255 \cdot 10^7 \cdot mm^3$ $\qquad S_{bot} = 9.5555 \cdot 10^7 \cdot mm^3$

<u>Short-term composite section properties (n):</u>

$f_c = 28 \cdot MPa$ $\qquad E_c = 25399 \cdot MPa$ $\qquad E_s = 200000 \cdot MPa$

Modular ratio: $n := \frac{E_s}{E_c}$ $\qquad n = 7.8743$

Haunch thickness (top flange of steel not included): $t_h = 76.2 \cdot n$

Effective flange width b_{eff}:

$b_{tf} = 450 \cdot mm$ $\qquad L_2 = 100000 \cdot mm$ $\qquad T_c = 230 \cdot mm$ $\qquad GS = 3700 \cdot mm$

$$p := \begin{cases} \frac{b_{tf}}{2} & \text{if } \frac{b_{tf}}{2} > t_w \\ t_w & \text{otherwise} \end{cases} \qquad b_{eff} := \begin{cases} \frac{L_2}{4} & \text{if } \frac{L_2}{4} < 12 \cdot T_c + p \\ 12 \cdot T_c + p & \text{otherwise} \end{cases}$$

$p = 225 \cdot mm$

$$b_{eff} := \begin{cases} b_{eff} & \text{if } b_{eff} < GS \\ GS & \text{otherwise} \end{cases}$$

$b_{eff} = 2.985 \cdot 10^3 \cdot mm$

a.) Concrete slab n = 9:

$b_{1c} := \frac{b_{eff}}{n}$ $\qquad b_{1c} = 379.0832 \cdot mm$

$A_{1c} := T_c \cdot b_{1c}$ $\qquad A_{1c} = 8.7189 \cdot 10^4 \cdot mm^2$

b.) Steel girder:

$\Sigma A_s = 101700 \cdot mm^2$

$I_s = 1.1532 \cdot 10^{11} \cdot mm^4$

$Y_{sb} = 1206.8053 \cdot mm$

Distance from x axis (bottom of section) to the concrete slab center of gravity - Y_1

$Y_{1c} := t_{bf} + h_w + t_{tf} + t_h + 0.5 \cdot T_c$ $\qquad Y_{1c} = 2817.2 \cdot mm$

$I_{1c} := \frac{b_{1c} \cdot T_c^3}{12}$ $\qquad \Sigma A_1 := A_{1c} + \Sigma A_s$ $\qquad \Sigma I_1 := I_s + I_{1c}$

$I_{1c} = 3.8436 \cdot 10^8 \cdot mm^4$ $\qquad \Sigma A_1 = 188889.147 \cdot mm^2$ $\qquad \Sigma I_1 = 1.157 \cdot 10^{11} \cdot mm^4$

$\Sigma AY1 := A_{1c} \cdot Y_{1c} + \Sigma A_s \cdot Y_{sb}$ $\qquad \Sigma AY1 = 3.6836 \cdot 10^8 \cdot mm^3$

Distance from x axis (bottom of section) to the neutral axis (N.A.) of composite section - $Y1_b$

$Y1_b := \frac{\Sigma AY1}{\Sigma A_1}$ $\qquad Y1_b = 1.9501 \cdot 10^3 \cdot mm$

Distance from top of steel to the neutral axis (N.A.) of composite section - $Y1_t$

$Y1_t := (t_{tf} + h_w + t_{bf}) - Y1_b$ $\qquad Y1_t = 675.8543 \cdot mm$

Distance between item center of gravity and N.A. of composite section - y3

steel: $\qquad$ concrete slab:

$y3_s := Y1_b - Y_{sb}$ $\qquad y3_c := Y1_t + \frac{T_c}{2} + t_h$

$y3_s = 743.3404 \cdot mm$ $\qquad y3_c = 867.0543 \cdot mm$

Composite section moment of inertia in respect to N.A. of composite section - I_{1n}

$I_{1n} := \Sigma I_1 + \Sigma A_s \cdot y3_s^2 + A_{1c} \cdot y3_c^2$ $\qquad I_{1n} = 2.3744 \cdot 10^{11} \cdot mm^4$

Section modulus of composite section at extreme steel fibers:

$S1_{top} := \frac{I_{1n}}{Y1_t}$ $\qquad S1_{bot} := \frac{I_{1n}}{Y1_b}$

$S1_{top} = 3.5132 \cdot 10^8 \cdot mm^3$ $\qquad S1_{bot} = 1.2176 \cdot 10^8 \cdot mm^3$

Long-term composite section properties (3n):

a.) Concrete slab - $3 \cdot n = 23.$

$b_{2c} := \frac{b_{eff}}{3 \cdot n}$ $\quad b_{2c} = 126.3611 \cdot mm$

$A_{2c} := T_c \cdot b_{2c}$ $\quad A_{2c} = 2.9063 \cdot 10^4 \cdot mm^2$

b.) Steel girder:

$\Sigma A_s = 101700 \cdot mm^2$

$I_s = 1.1532 \cdot 10^{11} \cdot mm^4$

$Y_{sb} = 1206.8053 \cdot mm$

Distance from x axis (bottom of section) to the concrete slab center of gravity - Y_2

$Y_{2c} := Y_{1c}$ $\quad Y_{2c} = 2817.2 \cdot mm$

$I_{2c} := \frac{b_{2c} \cdot T_c^3}{12}$ $\quad \Sigma A_2 := A_{2c} + \Sigma A_s$ $\quad \Sigma I_2 := I_s + I_{2c}$

$I_{2c} = 1.2812 \cdot 10^8 \cdot mm^4$ $\quad \Sigma A_2 = 130763.049 \cdot mm^2$ $\quad \Sigma I_2 = 1.1544 \cdot 10^{11} \cdot mm^4$

$\Sigma AY2 := A_{2c} \cdot Y_{2c} + \Sigma A_s \cdot Y_{sb}$ $\quad \Sigma AY2 = 204608.5216 \cdot m \cdot mm^2$

Distance from x axis (bottom of section) to the neutral axis (N.A.) of composite section - $Y2_b$

$Y2_b := \frac{\Sigma AY2}{\Sigma A_2}$ $\quad Y2_b = 1.5647 \cdot 10^3 \cdot mm$

Distance from top of steel to the neutral axis (N.A.) of composite section - $Y2_t$

$Y2_t := (t_{tf} + h_w + t_{bf}) - Y2_b$ $\quad Y2_t = 1061.2726 \cdot mm$

Distance between item center of gravity and N.A. of composite section - y4

steel: $\quad$ concrete slab:

$y4_s := Y2_b - Y_{sb}$ $\quad y4_c := Y2_t + \frac{T_c}{2} + t_h$

$y4_s = 357.9221 \cdot mm$ $\quad y4_c = 1252.4726 \cdot mm$

Composite section moment of inertia in respect to N.A. of composite section - I_{2n}

$I_{2n} := \Sigma I_2 + \Sigma A_s \cdot y4_s^2 + A_{2c} \cdot y4_c^2$ $\quad I_{2n} = 1.7406 \cdot 10^{11} \cdot mm^4$

Section modulus of composite section at extreme steel fibers:

$S2_{top} := \frac{I_{2n}}{Y2_t}$ $\quad S2_{bot} := \frac{I_{2n}}{Y2_b}$

$S2_{top} = 1.6401 \cdot 10^8 \cdot mm^3$ $\quad S2_{bot} = 1.1124 \cdot 10^8 \cdot mm^3$

7. LOAD FACTORS :

Load modification factor for strength limit states - $\eta 1$.

Ductility factor: $\eta 1_D := 1.0$

Redundancy factor: $\eta 1_R := 1.0$

Operational importance factor: $\eta 1_I := 1.0$

Load modification factor: $\eta 1 := \eta 1_D \cdot \eta 1_R \cdot \eta 1_I$ $\eta 1 = 1$

Load modification factor for all other limit states except extreme event limit state - $\eta 2$.

Ductility factor: $\eta 2_D := 1.0$

Redundancy factor: $\eta 2_R := 1.0$

Operational importance factor: $\eta 2_I := 1.0$

Load modification factor: $\eta 2 := \eta 2_D \cdot \eta 2_R \cdot \eta 2_I$ $\eta 2 = 1$

Load modification factor for extreme event limit state - $\eta 3$.

Ductility factor: $\eta 3_D := 1.0$

Redundancy factor: $\eta 3_R := 1.0$

Operational importance factor: $\eta 3_I := 1.0$

Load modification factor: $\eta 3 := \eta 3_D \cdot \eta 3_R \cdot \eta 3_I$ $\eta 3 = 1$

Load factors - γ.

Strength I :	$\gamma 1_{DC} := 1.25$	$\gamma 1_{DW} := 1.50$	$\gamma 1_{LL} := 1.75$
Service II :	$\gamma 2_{DC} := 1.0$	$\gamma 2_{DW} := 1.0$	$\gamma 2_{LL} := 1.30$
Fatigue :			$\gamma 3_{LL} := 0.75$

Multiple presence factors - m.

One lane loaded: $m_1 := 1.2$

Two lanes loaded: $m_2 := 1.0$

Three lanes loaded: $m_3 := 0.85$

four and more lanes loaded: $m_4 := 0.65$

8. LIVE LOADING CALCULATIONS (PER GIRDER):

Live loads are assumed to be carried in full by the short-term composite section and distributed to the individual girders according to the approximate methods (AASHTO A4.6.2.2.).

Conditions for approximate methods application.

a.) Width of the deck is constant.

b.) Number of beams is not less than four unless otherwise specified.

c.) Beams are parallel and have approximately the same stiffness.

d.) The roadway part of the overhang (d_e) does not exceed 910 [mm], unless otherwise specified.

e.) The cross-section is consistent with one of the cross-sections shown in Table 4.6.2.2.1-1.

Conditions specified above are met, thus permanent loads of and on the the deck may be uniformly distributed among the beams and/or stringers.

f.)	$1100 \cdot mm$	<	$GS := 3700 \cdot mm$	<	$4900 \cdot mm$	**O.K.**
g.)	$110 \cdot mm$	<	$T_c := 230 \cdot mm$	<	$300 \cdot mm$	**O.K.**
h.)	$6000 \cdot mm$	<	$L_2 := 100000 \cdot mm$	<	$73000 \cdot mm$	**N.G.**
i.)	$6000 \cdot mm$	<	$L_1 := 65000 \cdot mm$	<	$73000 \cdot mm$	**O.K.**

Live load lateral distribution factors for positive flexure - span 2.

Moment distribution to interior girder:

$L_2 = 100 \cdot m$	$S := 3.7 \cdot m$	$h_w = 2500 \cdot mm$	$I_s = 1.1532 \cdot 10^{11} \cdot mm^4$
$T_c := 230 \cdot mm$	$t_h = 76.2 \cdot mm$	$t_{tf} = 53 \cdot mm$	$\Sigma A_s = 101700 \cdot mm^2$
$h_w = 2500 \cdot mm$	$t_{bf} = 73 \cdot mm$	$n = 7.8743$	$Y_{sb} = 1206.8053 \cdot mm$

Distance between centers of gravity of the basic beam and deck (e_g):

$$e_g := \frac{T_c}{2} + t_h + t_{tf} + h_w + t_{bf} - Y_{sb} \qquad e_g = 1610.3947 \cdot mm$$

Longitudinal stiffness parameter: $K_g := n \cdot \left(I_s + \Sigma A_s \cdot e_g^2\right) \qquad K_g = 2.9848 \cdot 10^{12} \cdot mm^4$

One design lane loaded:

$$DFMI2_1 := 0.06 + \left(\frac{S}{4300 \cdot mm}\right)^{0.4} \cdot \left(\frac{S}{L_2}\right)^{0.3} \cdot \left(\frac{K_g}{L_2 \cdot T_c^3}\right)^{0.1}$$

$$DFMI2_1 = 0.4431$$

Two or more design lane loaded:

$$DFMI2_2 := 0.075 + \left(\frac{S}{2900 \cdot mm}\right)^{0.6} \cdot \left(\frac{S}{L_2}\right)^{0.2} \cdot \left(\frac{K_g}{L_2 \cdot T_c^3}\right)^{0.1}$$

$$DFMI2_2 = 0.7298$$

$$DFM2_{int} := \begin{cases} DFMI2_1 & \text{if } DFMI2_1 > DFMI2_2 \\ DFMI2_2 & \text{otherwise} \end{cases}$$

$$DFM2_{int} = 0.7298$$

Shear distribution to interior girder:

One design lane loaded:

$$DFVI2_1 := 0.36 + \left(\frac{S}{7600 \cdot mm}\right)$$

$$DFVI2_1 = 0.8468$$

Two or more design lane loaded:

$$DFVI2_2 := 0.2 + \frac{S}{3600 \cdot mm} - \left(\frac{S}{10700 \cdot mm}\right)^2$$

$$DFVI2_2 = 1.1082$$

$$DFV2_{int} := \begin{cases} DFVI2_1 & \text{if } DFVI2_1 > DFVI2_2 \\ DFVI2_2 & \text{otherwise} \end{cases}$$

$$DFV2_{int} = 1.1082$$

Moment distribution to exterior girder.

One design lane loaded (lever rule method):

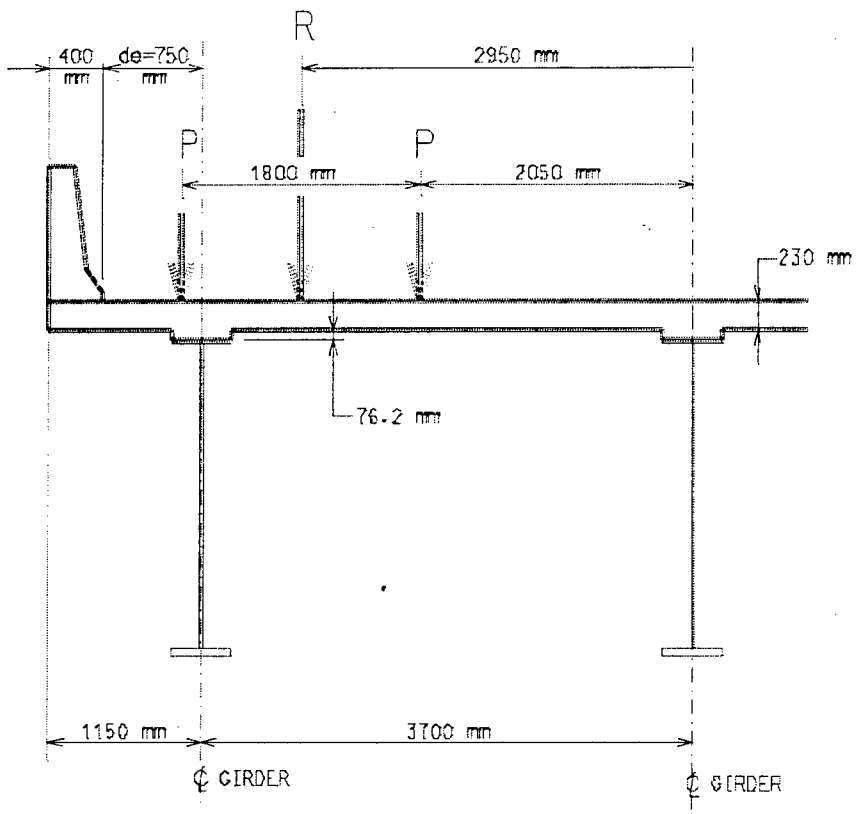

$DFME2_1 := m_1 \cdot \frac{2950}{3700}$ $\qquad m_1 = 1.2$ (multiple presence factor)

$DFME2_1 = 0.9568$

Two design lane loaded (modify interior girder factor by e_{int}):

$-300 < d_e := 750 < 1700$ $\qquad e_{int} := 0.77 + \frac{d_e}{2800}$ $\qquad e_{int} = 1.0379$

$DFME2_2 := DFM2_{int} \cdot e_{int}$ $\qquad DFME2_2 = 0.7574$

$$DFME2_{ext} := \begin{cases} DFME2_1 & \text{if } DFME2_1 > DFME2_2 \\ DFME2_2 & \text{otherwise} \end{cases}$$

$DFME2_{ext} = 0.9568$

Special analysis:

This additional investigation is required because the distribution factor for girders in a multi-girder cross-section of type considered for this project was determined without diaphragm or cross-frames.

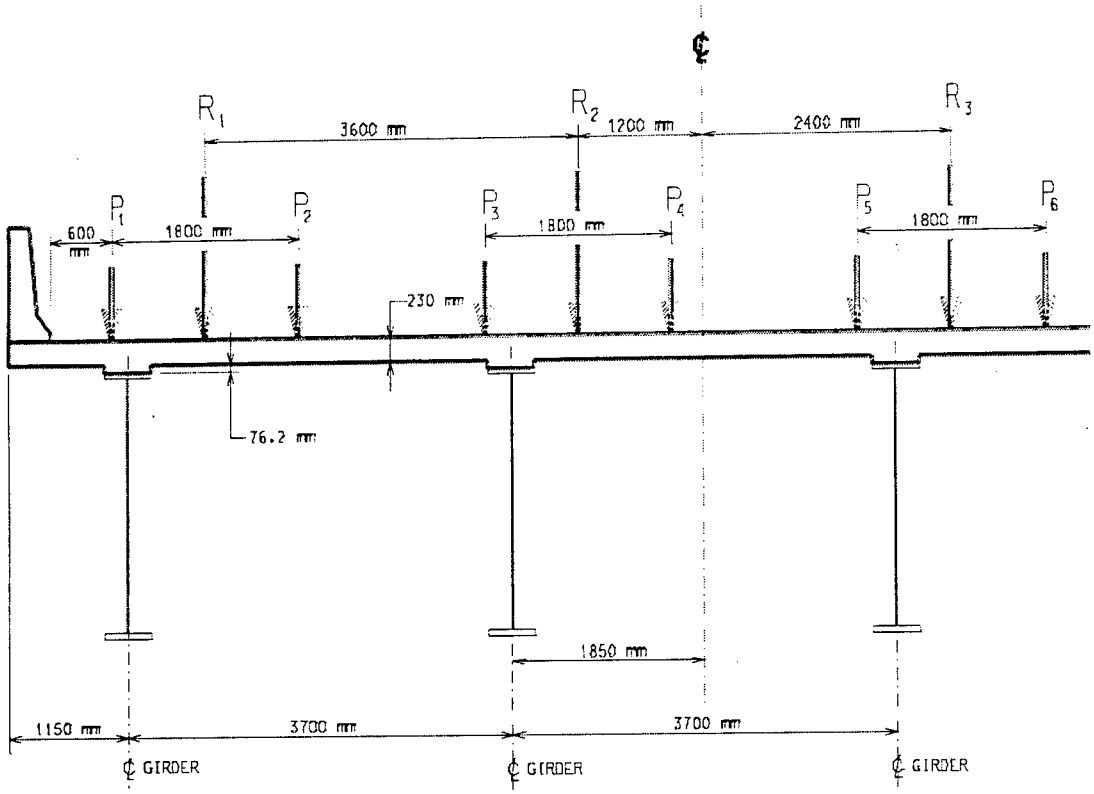

R - reaction on exterior beam in terms of lanes

N_L - number of loaded lines under consideration

e - eccentricity of a lane from the center of gravity of the pattern of girders [mm]

x - horizontal distance from the center of gravity of the pattern of girders to each girder [mm]

X_{ext} - horizontal distance from the center of gravity of the pattern of girders to the exterior girder [mm]

Nb - number of beams or girders

One design lane loaded: $N1_L := 1,\ N_b := 4,\ X_{ext} := 3700 + 1850,\ e := 3600 + 1200,\ x_1 := 5550,\ x_2 := 1850$

$$R1 := \frac{N1_L}{N_b} + \frac{X_{ext} \cdot e}{2 \cdot \left(x_1^2 + x_2^2\right)} \qquad R1 = 0.6392 \qquad m_1 = 1.2 \qquad m_1 \cdot R1 = 0.767$$

Two design lane loaded: $N2_L := 2,\ e_1 := 3600 + 1200,\ e_2 := 1200,\ x_1 := 5550,\ x_2 := 1850$

$$R2 := \frac{N2_L}{N_b} + \frac{X_{ext} \cdot \left(e_1 + e_2\right)}{2 \cdot \left(x_1^2 + x_2^2\right)} \qquad R2 = 0.9865 \qquad m_2 = 1 \qquad m_2 \cdot R2 = 0.9865$$

Three design lane loaded: $N3_L := 3$, $e_1 := 3600 + 1200$, $e_2 := 1200$, $e_3 := 2400$, $x_1 := 5550$, $x_2 := 185($

$$R3 := \frac{N3_L}{N_b} + \frac{X_{ext}\cdot\left[\left(e_1 + e_2\right) - e_3\right]}{2\cdot\left(x_1^2 + x_2^2\right)} \qquad R3 = 1.0419 \qquad m_3 = 0.85 \qquad m_3\cdot R3 = 0.8856$$

$$DFM2_{ext} := \begin{cases} DFME2_{ext} & \text{if } DFME2_{ext} > m_2\cdot R2 \\ m_2\cdot R2 & \text{otherwise} \end{cases}$$

$$DFM2_{ext} = 0.9865$$

Shear distribution to exterior girder.

One design lane loaded (lever rule method):

$DFVE2_1 := DFME2_1$ $\qquad DFVE2_1 = 0.9568$

Two design lane loaded (modify interior girder factor by e_{ext}):

$-300 < d_e := 750 < 1700$ $\qquad e_{ext} := 0.6 + \frac{d_e}{3000}$ $\qquad e_{ext} = 0.85$

$DFVE2_2 := DFV2_{int}\cdot e_{ext}$ $\qquad DFVE2_2 = 0.942$

$$DFVE2_{ext} := \begin{cases} DFVE2_1 & \text{if } DFVE2_1 > DFVE2_2 \\ DFVE2_2 & \text{otherwise} \end{cases}$$

$$DFVE2_{ext} = 0.9568$$

Special analysis (the same as for bending moments):

One design lane loaded: $m_1\cdot R1 = 0.767$

Two design lane loaded: $m_2\cdot R2 = 0.9865$

Three design lane loaded: $m_3\cdot R3 = 0.8856$

$$DFV2_{ext} := \begin{cases} DFVE2_{ext} & \text{if } DFVE2_{ext} > m_2\cdot R2 \\ \left(m_2\cdot R2\right) & \text{otherwise} \end{cases}$$

$$DFV2_{ext} = 0.9865$$

Summary of live load distribution factors for maximum positive flexure region (span 2).

Moment:

Span 2 strength / service limit states distribution factors: $DFM2_{int} = 0.7298$ (interior girder)

$DFM2_{ext} = 0.9865$ (exterior girder)

$$Test_1 := \begin{cases} 1 & \text{if } DFM2_{ext} < DFM2_{int} \\ 0 & \text{otherwise} \end{cases}$$

$$Test_1 = 0$$

Test = 1 : O.K. - interior load distribution factors govern.

Test = 0 : N.G. - exterior load distribution factors govern and exterior girder would have to be design separetly.

Shear:

Span 2 strength / service limit states distribution factors: $DFV2_{int} = 1.1082$ (interior girder)

$DFV2_{ext} = 0.9865$ (exterior girder)

$$Test_2 := \begin{cases} 1 & \text{if } DFV2_{ext} < DFV2_{int} \\ 0 & \text{otherwise} \end{cases}$$

$$Test_2 = 1$$

Test = 1 : O.K. - interior load distribution factors govern.

Test = 0 : N.G. - exterior load distribution factors govern and exterior girder would have to be design separetly.

9. LOAD COMBINATIONS.

Distribution factors for interior girder:

Span 2 strength / service limit states distribution factor: $DFM2_{int} = 0.7298$

Span 2 fatigue limit state distribution factor: $DFM2_f := \frac{DFMI2_1}{m_1}$ $DFM2_f = 0.3693$

Moment (from Qcon):

DC=DC$_1$ +DC$_2$ maximum positive moment (span 2): $MDCp_{max} := 16988 \cdot kN \cdot m$

DC$_1$ maximum positive moment (span 2): $MDC1p_{max} := 15538 \cdot kN \cdot m$

DC$_2$ maximum positive moment (span 2): $MDC2p_{max} := 1450 \cdot kN \cdot m$

DW maximum positive moment (span 2): $MDWp_{max} := 1603 \cdot kN \cdot m$

LL maximum positive moment (span 2): $MLLp_{max} := 12825 \cdot kN \cdot m$
LL = (Design Truck x Impact) + Lane
Impact = 1.33

STRENGTH I.

Maximum positive moment (span 2) for Strength I Limit State:

$$\eta 1 \Sigma \gamma i MSTp_{max} := \gamma 1_{DC} \cdot MDCp_{max} + \gamma 1_{DW} \cdot MDWp_{max} + \gamma 1_{LL} \cdot DFM2_{int} \cdot MLLp_{max}$$

$$\eta 1 \Sigma \gamma i MSTp_{max} = 40018.529 \cdot kN \cdot m$$

SERVICE II :

Maximum positive moment (span 2) for Service II Limit State:

$$\eta 1 \Sigma \gamma i MSEp_{max} := \gamma 2_{DC} \cdot MDCp_{max} + \gamma 2_{DW} \cdot MDWp_{max} + \gamma 2_{LL} \cdot DFM2_{int} \cdot MLLp_{max}$$

$$\eta 1 \Sigma \gamma i MSEp_{max} = 30758.2787 \cdot kN \cdot m$$

FATIGUE :

LL + Impact maximum positive moment (span 2): $MLLfp_{max} := 5305 \cdot kN \cdot m$
LL = Fatigue Truck x Impact
Impact = 1.15

$$\eta 1 \Sigma \gamma i Mfp_{max} := \gamma 3_{LL} \cdot DFM2_f \cdot MLLfp_{max}$$

$$\eta 1 \Sigma \gamma i Mfp_{max} = 1469.1984 \cdot kN \cdot m$$

10. STRENGTH I LIMIT STATE - SECTION AT MAX. POSITIVE MOMENT (SPAN 2).

Location of the plastic neutral axis (PNA).

$\Sigma A_s = 101700 \cdot mm^2$ $F_y = 345 \cdot MPa$ $f_c = 28 \cdot MPa$ $b_{eff} = 2985 \cdot mm$ $T_c := 230 \cdot mm$ $t_h = 76.2 \cdot mm$

a.) Top flange:

$t_{tf} = 53 \cdot mm$

$b_{tf} = 450 \cdot mm$

b.) Bottom flange:

$t_{bf} = 73 \cdot mm$

$b_{bf} = 450 \cdot mm$

c.) Web:

$t_w = 18 \cdot mm$

$h_w = 2500 \cdot mm$

Plastic forces:

Reinforcement (assuming deck reinforcement area = 1% of deck area)

Top reinforcement:	$P_{rt} := f_y \cdot b_{eff} \cdot T_c \cdot 0.005$	$P_{rt} = 1441.755 \cdot kN$
Bottom reinforcement:	$P_{rb} := f_y \cdot b_{eff} \cdot T_c \cdot 0.005$	$P_{rb} = 1441.755 \cdot kN$
Reinforced concrete deck slab:	$P_s := 0.85 \cdot f_c \cdot b_{eff} \cdot T_c$	$P_s = 16339.89 \cdot kN$
Compression flange:	$P_c := F_y \cdot b_{tf} \cdot t_{tf}$	$P_c = 8228.25 \cdot kN$
Web:	$P_w := F_y \cdot h_w \cdot t_w$	$P_w = 15525 \cdot kN$
Tension flange:	$P_t := F_y \cdot b_{bf} \cdot t_{bf}$	$P_t = 11333.25 \cdot kN$

$P_t + P_w + P_c = 35086.5 \cdot kN$ $P_s + P_{rt} + P_{rb} = 19223.4 \cdot kN$

$P_t + P_w + P_c \geq P_s + P_{rt} + P_{rb}$ PNA in top flange

Calculation of distance Y_{PNA} from top of compresion flange to PNA (Y_{PNA}):

$$Y_{PNA} := \begin{cases} \left[\frac{h_w}{2} \cdot \left(\frac{P_t - P_c - P_s - P_{rt} - P_{rb}}{P_w} + 1\right)\right] & \text{if } P_t + P_w \geq P_c + P_s + P_{rb} + P_{rt} \quad \text{PNA in web} \\ \left[\frac{t_{tf}}{2} \cdot \left(\frac{P_w + P_t - P_s - P_{rt} - P_{rb}}{P_c} + 1\right)\right] & \text{otherwise} \quad \text{PNA in top flange} \end{cases}$$

PNA in top flange: $Y_{PNA} = 51.0889 \cdot mm$

Calculation of plastic moment capacity (M_p).

$t_h = 76.2 \cdot mm$ $\quad CL_{rt} := 50 \cdot mm$ $\quad CL_{rb} := 25 \cdot mm$ $\quad DIA_{rt} := 15.9 \cdot mm$ $\quad DIA_{rb} := 15.9 \cdot mm$

Distance from P_{rt} to PNA: $\quad d_{rt} := T_c - \left(CL_{rt} + \frac{DIA_{rt}}{2}\right) + t_h + Y_{PNA}$ $\quad d_{rt} = 299.3 \cdot mm$

Distance from P_{rb} to PNA: $\quad d_{rb} := CL_{rb} + \frac{DIA_{rb}}{2} + t_h + Y_{PNA}$ $\quad d_{rb} = 160.2 \cdot mm$

Distance from P_s to PNA: $\quad d_s := \frac{T_c}{2} + t_h + Y_{PNA}$ $\quad d_s = 242.3 \cdot mm$

Distance from P_w to PNA: $\quad d_w := \frac{h_w}{2} + (t_{tf} - Y_{PNA})$ $\quad d_w = 1251.9 \cdot mm$

Distance from P_t to PNA: $\quad d_t := \frac{t_{bf}}{2} + h_w + (t_{tf} - Y_{PNA})$ $\quad d_t = 2538.4 \cdot mm$

$$M_p := \frac{P_w}{2 \cdot t_{tf}} \cdot \left[Y_{PNA}^2 + (t_{tf} - Y_{PNA})^2\right] + (P_s \cdot d_s + P_{rt} \cdot d_{rt} + P_{rb} \cdot d_{rb} + P_w \cdot d_w + P_t \cdot d_t)$$

$M_p = 53208.7524 \cdot kN \cdot m$

Check if the section qualifies as a compact section.

Ductility requirement: $\frac{D_p}{D_I} \le 5$

Distance from top of concrete deck slab to PNA: $\quad D_p := T_c + t_h + Y_{PNA}$ $\quad D_p = 357.2889 \cdot mm$

$\beta := 0.7$ $\quad$ for $F_y = 345 \cdot M:^2a$ $\quad D_I := \frac{t_{bf} + h_w + t_{tf} + T_c + t_h}{7.5} \cdot \beta$ $\quad D_I = 273.672 \cdot mm$

$$D_p = 357.2889 \cdot mm < \frac{h_w + t_{tf} + t_{bf} + T_c + t_h}{7.5} = 390.96 \cdot mm$$

$\frac{D_p}{D_I} = 1.3055 < 5$ $\quad$ Ductility requirement satisfied

Nominal flexural resistance (M_n) requirement for continuous span with non-compact interior section:

$M_{D1} := MDC1p_{max} \cdot \gamma 1_{DC}$ $\quad M_{D1} = 19422.5 \cdot kN \cdot m$ $\quad F_y = 345000 \cdot \frac{kN}{m^2}$

$M_{D2} := MDC2p_{max} \cdot \gamma 1_{DC} + MDWp_{max} \cdot \gamma 1_{DW}$ $\quad M_{D2} = 4217 \cdot kN \cdot m$

$S_{bot} = 9.5555 \cdot 10^7 \cdot mm^3$ $\quad S1_{bot} = 1.2176 \cdot 10^8 \cdot mm^3$ $\quad S2_{bot} = 1.1124 \cdot 10^8 \cdot mm^3$

$$F_y = \left(\frac{M_{D1}}{S_{bot}} + \frac{M_{D2}}{S2_{bot}} + \frac{M_{AD}}{S1_{bot}}\right) \cdot \eta 1$$

$$M_{AD} := \frac{\left(F_y - \eta 1 \cdot \frac{M_{D1}}{S_{bot}} - \eta 1 \cdot \frac{M_{D2}}{S2_{bot}}\right)}{\eta 1} \cdot S1_{bot} \qquad M_{AD} = 12642.2573 \cdot kN \cdot m$$

$M_y := M_{D1} + M_{D2} + M_{AD}$

$M_y = 36281.7573 \cdot kN \cdot m$

M_y - yield moment taken as a sum of moments due to factored loads at the strength limit state applied separately to steel, long-term composite and short-term composite sections to cause first yield in either steel flange.

$R_h := 1$ - flange-stress reduction factor (equal to 1 for homogenous section)

$M_n := 1.3 \cdot R_h \cdot M_y \qquad M_n = 47166.2845 \cdot kN \cdot m \qquad M_p = 53208.7524 \cdot kN \cdot m$

$M_n \le M_p$ **O.K.**

Web slenderness requirement:

$$\frac{2 \cdot D_{cp}}{t_w} \le 3.76 \cdot \sqrt{\frac{E_s}{F_y}}$$

Depth of the web in compression at the plastic moment - D_{cp}

Earlier computations showed that the PNA is in the top flange at plastic moment (M_p). Therefore, since the depth of the web in compression at M_p is equal zero ($D_{cp} := 0$), the web slenderness requirement is automatically satisfied.

Section proportions requirement:

$$0.1 \le \frac{I_{yc}}{I_y} \le 0.9$$

Moment of interia of the steel section about the vertical axis in the plane of the web in [mm^4]:

$$I_y := \frac{t_{bf} \cdot b_{bf}^3}{12} + \frac{h_w \cdot t_w^3}{12} + \frac{t_{tf} \cdot b_{tf}^3}{12} \qquad I_y = 9.5803 \cdot 10^8 \cdot mm^4$$

Moment of interia of the compression flange of the steel section about the vertical axis in the plane of the web in [mm^4]:

$$I_{yc} := \frac{t_{tf} \cdot b_{tf}^3}{12} \qquad I_{yc} = 4.0247 \cdot 10^8 \cdot mm^4$$

$0.1 < \frac{I_{yc}}{I_y} = 0.4201 < 0.9$ Section proportions requirement satisfied

Strength limit state for flexure.

$\phi_f := 1.0$ $\qquad M_u \le \phi_f M_n$

$M_u := \eta 1 \Sigma \gamma i MSTp_{max}$

$M_n = 47166.2845 \cdot kN \cdot m$

$M_u = 40018.529 \cdot kN \cdot m < \phi_f M_n = 47166.2845 \cdot kN \cdot m$

Section satisfies the strength I limit state for flexure

11. SERVICE II LIMIT STATE - SECTION AT MAX. POSITIVE MOMENT (SPAN 2).

Tension flange:

Tension flange flexural stresses due to the unfactored loads:

$f_{DC1tf} := \frac{MDC1p_{max}}{S_{bot}}$ $\qquad f_{DC1tf} = 162.6076 \cdot MPa$

$f_{DC2tf} := \frac{MDC2p_{max}}{S2_{bot}}$ $\qquad f_{DC2tf} = 13.0346 \cdot MPa$

$f_{DWtf} := \frac{MDWp_{max}}{S2_{bot}}$ $\qquad f_{DWtf} = 14.41 \cdot MPa$

$f_{LLtf} := \frac{MLLp_{max}}{S1_{bot}}$ $\qquad f_{LLtf} = 105.3331 \cdot MPa$

$f_{tf} := \gamma 2_{DC} \cdot f_{DC1tf} + \gamma 2_{DC} \cdot f_{DC2tf} + \gamma 2_{DW} \cdot f_{DWtf} + \gamma 2_{LL} \cdot f_{LLtf}$ $\qquad f_{tf} = 326.9853 \cdot MPa$

$R_b := 1$ $\qquad R_h = 1$

$f_{tf} = 326.9853 \cdot MPa < 0.95 \cdot F_y \cdot R_b \cdot R_h = 327.75 \cdot MPa$

Tension flange satisfies the service II limit state

$DIFFRENCE := 0.95 \cdot F_y \cdot R_b \cdot R_h - f_{tf}$ $\qquad DIFFRENCE = 0.7647 \cdot MPa$

$\%DIFFRENCE := \frac{DIFFRENCE \cdot 100}{0.95 \cdot F_y \cdot R_b \cdot R_h}$ $\qquad \%DIFFRENCE = 0.2333\ \%$

Compression flange:

Compression flange flexural stresses due to the unfactored loads:

$f_{DC1cf} := \frac{MDC1p_{max}}{S_{top}}$ $\qquad f_{DC1cf} = 191.2255 \cdot MPa$

$f_{DC2cf} := \frac{MDC2p_{max}}{S2_{top}}$ $\qquad f_{DC2cf} = 8.8407 \cdot MPa$

$f_{DWcf} := \frac{MDWp_{max}}{S2_{top}}$ $\qquad f_{DWcf} = 9.7735 \cdot MPa$

$f_{LLcf} := \frac{MLLp_{max}}{S1_{top}}$ $\qquad f_{LLcf} = 36.5049 \cdot MPa$

$f_{cf} := \gamma 2_{DC} \cdot f_{DC1cf} + \gamma 2_{DC} \cdot f_{DC2cf} + \gamma 2_{DW} \cdot f_{DWcf} + \gamma 2_{LL} \cdot f_{LLcf}$ $\qquad f_{cf} = 257.296 \cdot MPa$

$R_b := 1$ $\qquad R_h = 1$

$f_{cf} = 257.296 \cdot MPa \quad < \quad 0.95 \cdot F_y \cdot R_b \cdot R_h = 327.75 \cdot MPa$

Compression flange satisfies the service II limit state

12. CHANGE IN FLANGE THICKNESS AT POINT "A" (SPAN 2).

SECTION PROPERTIES BETWEEN POINTS "A" AND "B".

Point "B" in interior span is located 18.5 [m] from interior support (pt. 0.185 of span 2).

Non-composite section properties (n = ∞):

a.) Top flange:

$t_{tf} := 45 \cdot mm$

$b_{tf} := 450 \cdot mm$

$A_{tf} := b_{tf} \cdot t_{tf}$

$A_{tf} = 20250 \cdot mm^2$

b.) Bottom flange:

$t_{bf} := 56 \cdot mm$

$b_{bf} := 450 \cdot mm$

$A_{bf} := b_{bf} \cdot t_{bf}$

$A_{bf} = 25200 \cdot mm^2$

c.) Web:

$t_w := 18 \cdot mm$

$h_w := 2500 \cdot mm$

$A_w := t_w \cdot h_w$

$A_w = 45000 \cdot mm^2$

Distance from x axis (bottom of the whole section) to the item center of gravity - y1

$y1_{tf} := t_{bf} + h_w + 0.5 \cdot t_{tf}$

$y1_{tf} = 2578.5 \cdot mm$

$y1_{bf} := 0.5 \cdot t_{bf}$

$y1_{bf} = 28 \cdot mm$

$y1_w := t_{bf} + 0.5 \cdot h_w$

$y1_w = 1306 \cdot mm$

$I_{0tf} := \frac{b_{tf} \cdot t_{tf}^3}{12}$

$I_{0tf} = 3.4172 \cdot 10^6 \cdot mm^4$

$I_{0bf} := \frac{b_{bf} \cdot t_{bf}^3}{12}$

$I_{0bf} = 6.5856 \cdot 10^6 \cdot mm^4$

$I_{0w} := \frac{t_w \cdot h_w^3}{12}$

$I_{0w} = 2.3438 \cdot 10^{10} \cdot mm^4$

$A\Sigma A_s := A_{tf} + A_{bf} + A_w$

$A\Sigma A_s = 90450 \cdot mm^2$

$A\Sigma y1 := A_{tf} \cdot y1_{tf} + A_{bf} \cdot y1_{bf} + A_w \cdot y1_w$

$A\Sigma y1 = 1.1169 \cdot 10^8 \cdot mm^3$

$\Sigma I_0 := I_{0tf} + I_{0bf} + I_{0w}$

$\Sigma I_0 = 2.3448 \cdot 10^{10} \cdot mm^4$

Distance from bottom of section to the neutral axis (N.A.) of whole section - Y_{sb}

$AY_{sb} := \frac{A\Sigma Ay1}{A\Sigma A_s}$

$AY_{sb} = 1234.8284 \cdot mm$

Distance from top of steel to the neutral axis (N.A.) of whole section - Y_{st}

$AY_{st} := (t_{tf} + h_w + t_{bf}) - AY_{sb}$

$AY_{st} = 1366.1716 \cdot mm$

Distance between item center of gravity and N.A. of whole section - y2

$y2_w := y1_w - AY_{sb}$

$y2_w = 71.1716 \cdot mm$

$y2_{bf} := AY_{sb} - y1_{bf}$

$y2_{bf} = 1206.8284 \cdot mm$

$y2_{tf} := (t_{bf} + h_w + 0.5 \cdot t_{tf}) - AY_{sb}$

$y2_{tf} = 1343.6716 \cdot mm$

Moment of inertia of whole steel section in respect to N.A. of whole section - I_s

$AI_s := \Sigma I_0 + A_{tf} \cdot y2_{tf}^2 + A_{bf} \cdot y2_{bf}^2 + A_w \cdot y2_w^2$ $\qquad AI_s = 9.6938 \cdot 10^{10} \cdot mm^4$

Section modulus of steel section:

$AS_{top} := \frac{AI_s}{AY_{st}}$ $\qquad AS_{bot} := \frac{AI_s}{AY_{sb}}$

$AS_{top} = 7.0956 \cdot 10^7 \cdot mm^3$ $\qquad AS_{bot} = 7.8503 \cdot 10^7 \cdot mm^3$

<u>Short-term composite section properties (n):</u>

$f_c = 28 \cdot MPa$ $\qquad E_c = 25399 \cdot MPa$ $\qquad E_s = 200000 \cdot MPa$

Modular ratio: $n := \frac{E_s}{E_c}$ $\qquad n = 7.8743$

Haunch thickness (top flange of steel not included): $t_h := \left[(76.2 + 55) \cdot mm - t_{tf}\right]$ $\qquad t_h = 86.2 \cdot mm$

Effective flange width b_{eff}:

$b_{tf} = 450 \cdot mm$ $\qquad L_2 = 100000 \cdot mm$ $\qquad T_c = 230 \cdot mm$ $\qquad GS = 3700 \cdot mm$

$$p := \begin{cases} \frac{b_{tf}}{2} & \text{if } \frac{b_{tf}}{2} > t_w \\ t_w & \text{otherwise} \end{cases} \qquad b_{eff} := \begin{cases} \frac{L_2}{4} & \text{if } \frac{L_2}{4} < 12 \cdot T_c + p \\ 12 \cdot T_c + p & \text{otherwise} \end{cases}$$

$p = 225 \cdot mm$

$$b_{eff} := \begin{cases} b_{eff} & \text{if } b_{eff} < GS \\ GS & \text{otherwise} \end{cases}$$

$b_{eff} = 2.985 \cdot 10^3 \cdot mm$

a.) Concrete slab n = 9:

$b_{1c} := \frac{b_{eff}}{n}$ $\qquad b_{1c} = 379.0832 \cdot mm$

$A_{1c} := T_c \cdot b_{1c}$ $\qquad A_{1c} = 8.7189 \cdot 10^4 \cdot mm^2$

b.) Steel girder:

$A\Sigma A_s = 90450 \cdot mm^2$

$AI_s = 9.6938 \cdot 10^{10} \cdot mm^4$

$AY_{sb} = 1234.8284 \cdot mm$

Distance from x axis (bottom of section) to the concrete slab center of gravity - Y_1

$Y_{1c} := t_{bf} + h_w + t_{tf} + t_h + 0.5 \cdot T_c$ $\qquad Y_{1c} = 2802.2 \cdot mm$

$I_{1c} := \frac{b_{1c} \cdot T_c^3}{12}$ $\qquad \Sigma A_1 := A_{1c} + A\Sigma A_s$ $\qquad \Sigma I_1 := AI_s + I_{1c}$

$I_{1c} = 3.8436 \cdot 10^8 \cdot mm^4$ $\qquad \Sigma A_1 = 177639.147 \cdot mm^2$ $\qquad \Sigma I_1 = 9.7322 \cdot 10^{10} \cdot mm^4$

$\Sigma AY1 := A_{1c} \cdot Y_{1c} + A\Sigma A_s \cdot AY_{sb}$ $\qquad \Sigma AY1 = 3.5601 \cdot 10^8 \cdot mm^3$

Distance from x axis (bottom of section) to the neutral axis (N.A.) of composite section - $Y1_b$

$Y1_b := \frac{\Sigma AY1}{\Sigma A_1}$ $\qquad Y1_b = 2.0041 \cdot 10^3 \cdot mm$

Distance from top of steel to the neutral axis (N.A.) of composite section - $Y1_t$

$Y1_t := (t_{tf} + h_w + t_{bf}) - Y1_b$ $\qquad Y1_t = 596.8716 \cdot mm$

Distance between item center of gravity and N.A. of composite section - y3

steel: $\qquad$ concrete:

$y3_s := Y1_b - AY_{sb}$ $\qquad y3_c := Y1_t - \frac{T_c}{2}$

$y3_s = 769.3 \cdot mm$ $\qquad y3_c = 481.8716 \cdot mm$

Composite section moment of inertia in respect to N.A. of composite section - I_{1n}

$I_{1n} := \Sigma I_1 + A\Sigma A_s \cdot y3_s^2 + A_{1c} \cdot y3_c^2$ $\qquad I_{1n} = 1.711 \cdot 10^{11} \cdot mm^4$

Section modulus of composite section at extreme steel fibers:

$AS1_{top} := \frac{I_{1n}}{(t_{bf} + h_w + t_{tf}) - Y1_b}$ $\qquad AS1_{bot} := \frac{I_{1n}}{Y1_b}$

$AS1_{top} = 2.8666 \cdot 10^8 \cdot mm^3$ $\qquad AS1_{bot} = 8.5373 \cdot 10^7 \cdot mm^3$

Long-term composite section properties (3n):

a.) Concrete slab - $3 \cdot n = 23.$

$b_{2c} := \frac{b_{eff}}{3 \cdot n}$ $\quad b_{2c} = 126.3611 \cdot mm$

$A_{2c} := T_c \cdot b_{2c}$ $\quad A_{2c} = 2.9063 \cdot 10^4 \cdot mm^2$

b.) Steel girder:

$A\Sigma A_s = 90450 \cdot mm^2$

$AI_s = 9.6938 \cdot 10^{10} \cdot mm^4$

$AY_{sb} = 1234.8284 \cdot mm$

Distance from x axis (bottom of section) to the concrete slab center of gravity - Y_2

$Y_{2c} := Y_{1c}$ $\quad Y_{2c} = 2802.2 \cdot mm$

$I_{2c} := \frac{b_{2c} \cdot T_c^3}{12}$ $\quad \Sigma A_2 := A_{2c} + A\Sigma A_s$ $\quad \Sigma I_2 := AI_s + I_{2c}$

$I_{2c} = 1.2812 \cdot 10^8 \cdot mm^4$ $\quad \Sigma A_2 = 119513.049 \cdot mm^2$ $\quad \Sigma I_2 = 9.7066 \cdot 10^{10} \cdot mm^4$

$\Sigma AY2 := A_{2c} \cdot Y_{2c} + A\Sigma A_s \cdot AY_{sb}$ $\quad \Sigma AY2 = 193130.7009 \cdot m \cdot mm^2$

Distance from x axis (bottom of section) to the neutral axis (N.A.) of composite section - $Y2_b$

$Y2_b := \frac{\Sigma AY2}{\Sigma A_2}$ $\quad Y2_b = 1.616 \cdot 10^3 \cdot mm$

Distance from top of steel to the neutral axis (N.A.) of composite section - $Y2_t$

$Y2_t := (t_{tf} + h_w + t_{bf}) - Y2_b$ $\quad Y2_t = 985.02 \cdot mm$

Distance between item center of gravity and N.A. of composite section - y4

steel: $\quad$ concrete slab:

$y4_s := Y2_b - AY_{sb}$ $\quad y4_c := Y2_t - \frac{T_c}{2}$

$y4_s = 381.1517 \cdot mm$ $\quad y4_c = 870.02 \cdot mm$

Composite section moment of inertia in respect to N.A. of composite section - I_{2n}

$I_{2n} := \Sigma I_2 + A\Sigma A_s \cdot y4_s^2 + A_{2c} \cdot y4_c^2$ $\quad I_{2n} = 1.3221 \cdot 10^{11} \cdot mm^4$

Section modulus of composite section at extreme steel fibers:

$AS2_{top} := \frac{I_{2n}}{t_{bf} + h_w + t_{tf} - Y2_b}$ $\quad AS2_{bot} := \frac{I_{2n}}{Y2_b}$

$AS2_{top} = 1.3422 \cdot 10^8 \cdot mm^3$ $\quad AS2_{bot} = 8.1811 \cdot 10^7 \cdot mm^3$

Live load lateral distribution factors for positive flexure between point A nad B - span 2.

Moment distribution to interior girder:

$L_1 = 65 \cdot m$ $\quad T_c = 230 \cdot mm$ $\quad t_{bf} = 56 \cdot mm$ $\quad AI_s = 9.6938 \cdot 10^{10} \cdot mm^4$

$S = 3.7 \cdot m$ $\quad h_w = 2500 \cdot mm$ $\quad t_{tf} = 45 \cdot mm$ $\quad A\Sigma A_s = 90450 \cdot mm^2$

$t_h = 86.2 \cdot mm$ $\quad AY_{sb} = 1234.8284 \cdot mm$

Distance between centers of gravity between of the basic beam and deck (e_g):

$$e_g := \frac{T_c}{2} + t_h + t_{tf} + h_w + t_{bf} - AY_{sb} \qquad e_g = 1567.3716 \cdot mm$$

Longitudinal stiffness parameter: $AK_g := n \cdot \left(AI_s + A\Sigma A_s \cdot e_g^2\right)$ $\qquad AK_g = 2.513 \cdot 10^{12} \cdot mm^4$

One design lane loaded:

$$DFMIA_1 := 0.06 + \left(\frac{S}{4300 \cdot mm}\right)^{0.4} \cdot \left(\frac{S}{L_2}\right)^{0.3} \cdot \left(\frac{AK_g}{L_2 \cdot T_c^3}\right)^{0.1}$$

$$DFMIA_1 = 0.4366$$

Two or more design lane loaded:

$$DFMIA_2 := 0.075 + \left(\frac{S}{2900 \cdot mm}\right)^{0.6} \cdot \left(\frac{S}{L_2}\right)^{0.2} \cdot \left(\frac{AK_g}{L_2 \cdot T_c^3}\right)^{0.1}$$

$$DFMIA_2 = 0.7186$$

$$DFMA_{int} := \begin{cases} DFMIA_1 & \text{if } DFMIA_1 > DFMIA_2 \\ DFMIA_2 & \text{otherwise} \end{cases}$$

$$DFMA_{int} = 0.7186$$

All other distribution factors for regions in negative flexure for the interior girder and for the exterior girder are independent of the span length and the stiffness of the girder; therefore, they are identical to the values calculated earlier for regions in maximum positive flexure in span 2.

Shear distribution to interior girder:

$$DFV2_{int} = 1.1082$$

Moment distribution to exterior girder:

$$DFM2_{ext} = 0.9865$$

Shear distribution to exterior girder:

$$DFV2_{ext} = 0.9865$$

Point "A" in interior span is located 33.5 [m] from interior support (pt. 0.335 of span 2).

MOMENTS AT POINT "A".

DC=DC$_1$ +DC$_2$ positive moment:

$MDCp_{0.3} := 10312 \cdot kN \cdot m$ $\quad$ $MDCp_{0.4} := 15319 \cdot kN \cdot m$

$$MDCp_A := \frac{(MDCp_{0.4} - MDCp_{0.3}) \cdot 3.5}{10} + MDCp_{0.3} \qquad MDCp_A = 12064.45 \cdot kN \cdot m$$

DC$_1$ positive moment:

$MDC1p_{0.3} := 9432 \cdot kN \cdot m$ $\quad$ $MDC1p_{0.4} := 14011 \cdot kN \cdot m$

$$MDC1p_A := \frac{(MDC1p_{0.4} - MDC1p_{0.3}) \cdot 3.5}{10} + MDC1p_{0.3} \qquad MDC1p_A = 11034.65 \cdot kN \cdot m$$

DC$_2$ positive moment:

$MDC2p_{0.3} := 880.5 \cdot kN \cdot m$ $\quad$ $MDC2p_{0.4} := 1307 \cdot kN \cdot m$

$$MDC2p_A := \frac{(MDC2p_{0.4} - MDC2p_{0.3}) \cdot 3.5}{10} + MDC2p_{0.3} \qquad MDC2p_A = 1029.775 \cdot kN \cdot m$$

DW positive moment:

$MDWp_{0.3} := 973.2 \cdot kN \cdot m$ $\quad$ $MDWp_{0.4} := 1445 \cdot kN \cdot m$

$$MDWp_A := \frac{(MDWp_{0.4} - MDWp_{0.3}) \cdot 3.5}{10} + MDWp_{0.3} \qquad MDWp_A = 1138.33 \cdot kN \cdot m$$

LL positive moment:
LL = (Design Truck x Impact) + Lane
Impact = 1.33

$MLLp_{0.3} := 9585 \cdot kN \cdot m$ $\quad$ $MLLp_{0.4} := 12021 \cdot kN \cdot m$

$$MLLp_A := \frac{(MLLp_{0.4} - MLLp_{0.3}) \cdot 3.5}{10} + MLLp_{0.3} \qquad MLLp_A = 10437.6 \cdot kN \cdot m$$

Positive moment for Strength I Limit State at point 'A":

$$\eta 1 \Sigma \gamma i MSTp_A := \gamma 1_{DC} \cdot MDCp_A + \gamma 1_{DW} \cdot MDWp_A + \gamma 1_{LL} \cdot DFMA_{int} \cdot MLLp_A$$

$$\eta 1 \Sigma \gamma i MSTp_A = 29914.0675 \cdot kN \cdot m$$

SECTION DESIGN.

Location of the plastic neutral axis (PNA).

$F_y = 345 \cdot MPa$ $\quad f_c = 28 \cdot MPa$ $\quad b_{eff} = 2985 \cdot mm$ $\quad T_c := 230 \cdot mm$ $\quad t_h = 86.2 \cdot mm$

a.) Top flange:

$t_{tf} = 45 \cdot mm$

$b_{tf} = 450 \cdot mm$

b.) Bottom flange:

$t_{bf} = 56 \cdot mm$

$b_{bf} = 450 \cdot mm$

c.) Web:

$t_w = 18 \cdot mm$

$h_w = 2500 \cdot mm$

Plastic forces:

Reinforcement (assuming deck reinforcement area = 1% of deck area)

Top reinforcement:	$P_{rt} := f_y \cdot b_{eff} T_c \cdot 0.005$	$P_{rt} = 1441.755 \cdot kN$
Bottom reinforcement:	$P_{rb} := f_y \cdot b_{eff} T_c \cdot 0.005$	$P_{rb} = 1441.755 \cdot kN$
Reinforced concrete deck slab:	$P_s := 0.85 \cdot f_c \cdot b_{eff} T_c$	$P_s = 16339.89 \cdot kN$
Compression flange:	$P_c := F_y \cdot b_{tf} \cdot t_{tf}$	$P_c = 6986.25 \cdot kN$
Web:	$P_w := F_y \cdot h_w \cdot t_w$	$P_w = 15525 \cdot kN$
Tension flange:	$P_t := F_y \cdot b_{bf} \cdot t_{bf}$	$P_t = 8694 \cdot kN$

$P_t + P_w + P_c = 31205.25 \cdot kN$ $\quad P_s + P_{rt} + P_{rb} = 19223.4 \cdot kN$

$P_t + P_w + P_c \geq P_s + P_{rt} + P_{rb}$ PNA in top flange

Calculation of distance Y_{PNA} from top of top compresion flange to PNA (Y_{PNA}):

$$Y_{PNA} := \begin{cases} \left[\frac{h_w}{2} \cdot \left(\frac{P_t - P_c - P_s - P_{rt} - P_{rb}}{P_w} + 1\right)\right] & \text{if } P_t + P_w \geq P_c + P_s + P_{rb} + P_{rt} \quad \text{PNA in web} \\ \left[\frac{t_{tf}}{2} \cdot \left(\frac{P_w + P_t - P_s - P_{rt} - P_{rb}}{P_c} + 1\right)\right] & \text{otherwise} \quad \text{PNA in top flange} \end{cases}$$

PNA in top flange: $\quad Y_{PNA} = 38.5889 \cdot mm$

Calculation of plastic moment capacity (M_p):

$t_h = 0.0862 \cdot m$ $\quad CL_{rt} := 50 \cdot mm$ $\quad CL_{rb} := 25 \cdot mm$ $\quad DIA_{rt} := 15.9 \cdot mm$ $\quad DIA_{rb} := 15.9 \cdot mm$

Distance from P_{rt} to PNA: $\quad d_{rt} := T_c - \left(CL_{rt} + \frac{DIA_{rt}}{2}\right) + t_h + Y_{PNA}$ $\quad d_{rt} = 296.8 \cdot mm$

Distance from P_{rb} to PNA: $\quad d_{rb} := CL_{rb} + \frac{DIA_{rb}}{2} + t_h + Y_{PNA}$ $\quad d_{rb} = 157.7 \cdot mm$

Distance from P_s to PNA: $\quad d_s := \frac{T_c}{2} + t_h + Y_{PNA}$ $\quad d_s = 239.8 \cdot mm$

Distance from P_w to PNA: $\quad d_w := \frac{h_w}{2} + (t_{tf} - Y_{PNA})$ $\quad d_w = 1256.4 \cdot mm$

Distance from P_t to PNA: $\quad d_t := \frac{t_{bf}}{2} + h_w + (t_{tf} - Y_{PNA})$ $\quad d_t = 2534.4 \cdot mm$

$$M_p := \frac{P_w}{2 \cdot t_{tf}} \cdot \left[Y_{PNA}^2 + (t_{tf} - Y_{PNA})^2\right] + (P_s \cdot d_s + P_{rt} \cdot d_{rt} + P_{rb} \cdot d_{rb} + P_w \cdot d_w + P_t \cdot d_t)$$

$M_p = 46377.4269 \cdot kN \cdot m$

Check if the section qualifies as a compact section.

Ductility requirement: $\quad \frac{D_p}{D_I} \le 5$

Distance from top of concrete deck slab to PNA: $\quad D_p := T_c + t_h + Y_{PNA}$ $\quad D_p = 354.7889 \cdot mm$

$\beta := 0.7$ $\quad$ for $F_y = 345 \cdot M{:}^{2}a$ $\quad D_I := \frac{t_{bf} + h_w + t_{tf} + T_c + t_h}{7.5} \cdot \beta$ $\quad D_I = 272.272 \cdot mm$

$$D_p = 354.7889 \cdot mm < \frac{h_w + t_{tf} + t_{bf} + T_c + t_h}{7.5} = 388.96 \cdot mm$$

$\frac{D_p}{D_I} = 1.3031 < 5$ $\quad$ Ductility requirement satisfied

Nominal flexural resistance requirement (M_n).

For continuous span with non-compact interior support section:

$M_{D1} := MDC1p_A \cdot \gamma 1_{DC}$ $\quad M_{D1} = 13793.3125 \cdot kN \cdot m$ $\quad F_y = 345000 \cdot \frac{kN}{m^2}$

$M_{D2} := MDC2p_A \cdot \gamma 1_{DC} + MDWp_A \cdot \gamma 1_{DW}$ $\quad M_{D2} = 2994.7137 \cdot kN \cdot m$

$AS_{bot} = 7.8503 \cdot 10^7 \cdot mm^3$ $\quad AS1_{bot} = 8.5373 \cdot 10^7 \cdot mm^3$ $\quad AS2_{bot} = 8.1811 \cdot 10^7 \cdot mm^3$

$$F_y = \left(\frac{M_{D1}}{AS_{bot}} + \frac{M_{D2}}{AS2_{bot}} + \frac{M_{AD}}{AS1_{bot}} \right) \cdot \eta 1$$

$$M_{AD} := \frac{\left(F_y - \eta 1 \cdot \frac{M_{D1}}{AS_{bot}} - \eta 1 \cdot \frac{M_{D2}}{AS2_{bot}} \right)}{\eta 1} \cdot AS1_{bot} \qquad M_{AD} = 11328.212 \cdot kN \cdot m$$

$M_y := M_{D1} + M_{D2} + M_{AD}$

$M_y = 28116.2383 \cdot kN \cdot m$

(My - yield moment taken as a sum of moments due to factored loads at the strength limit state applied separately to steel, long-term composite and short-term composite sections to cause first yield in either steel flange)

$R_h := 1$ - Flange-stress reduction factor (equal to 1 for homogenous section)

$M_n := 1.3 \cdot R_h \cdot M_y \qquad M_n = 36551.1098 \cdot kN \cdot m \qquad M_p = 46377.4269 \cdot kN \cdot m$

$M_n \le M_p$ **O.K.**

Web slenderness requirement:

$$\frac{2 \cdot D_{cp}}{t_w} \le 3.76 \cdot \sqrt{\frac{E_s}{F_y}}$$

Depth of the web in compression at the plastic moment - D_{cp}

Earlier computations in 9.1. showed that the PNA is in the top flange at plastic moment (M_p). Therefore, since the depth of the web in compression at M_p is equal zero ($D_{cp} := 0$), the web slenderness requirement is automatically satisfied.

Section proportions requirement:

$$0.1 \le \frac{I_{yc}}{I_y} \le 0.9$$

Moment of interia of the steel section about the vertical axis in the plane of the web in [mm^4]:

$$I_y := \frac{t_{bf} \cdot b_{bf}^3}{12} + \frac{h_w \cdot t_w^3}{12} + \frac{t_{tf} \cdot b_{tf}^3}{12} \qquad I_y = 7.6818 \cdot 10^8 \cdot mm^4$$

Moment of interia of the compression flange of the steel section about the vertical axis in the plane of the web in [mm^4]:

$$I_{yc} := \frac{t_{tf} \cdot b_{tf}^3}{12} \qquad I_{yc} = 3.4172 \cdot 10^8 \cdot mm^4$$

$0.1 < \frac{I_{yc}}{I_y} = 0.4448 < 0.9$ Section proportions requirement satisfied

STRENGTH LIMIT STATE FOR FLEXURE:

$$M_u \le \phi_f M_n$$

$M_u := \eta 1 \Sigma \gamma i MSTp_A$

$\phi_f := 1.0$

$M_n = 36551.1098 \cdot kN \cdot m$

$$M_u = 29914.0675 \cdot kN \cdot m < \phi_f M_n = 36551.1098 \cdot kN \cdot m$$

Section satisfies the strength I limit state for flexure

SERVICE II LIMIT STATE:

$$0.95 \cdot F_y \cdot R_b \cdot R_h \ge f_f$$

Tension flange:

Tension flange flexural stresses due to the unfactored loads:

$f_{DC1tf} := \frac{MDC1p_A}{AS_{bot}}$ $\quad f_{DC1tf} = 140.563 \cdot MPa$

$f_{DC2tf} := \frac{MDC2p_A}{AS2_{bot}}$ $\quad f_{DC2tf} = 12.5872 \cdot MPa$

$f_{DWtf} := \frac{MDWp_A}{AS2_{bot}}$ $\quad f_{DWtf} = 13.9141 \cdot MPa$

$f_{LLtf} := \frac{MLLp_A}{AS1_{bot}}$ $\quad f_{LLtf} = 122.2591 \cdot MPa$

$f_{tf} := \gamma 2_{DC} \cdot f_{DC1tf} + \gamma 2_{DC} \cdot f_{DC2tf} + \gamma 2_{DW} \cdot f_{DWtf} + \gamma 2_{LL} \cdot f_{LLtf}$ $\quad f_{tf} = 326.0011 \cdot MPa$

$R_b := 1$ $\quad R_h = 1$

$$f_{tf} = 326.0011 \cdot MPa < 0.95 \cdot F_y \cdot R_b \cdot R_h = 327.75 \cdot MPa$$

Tension flange satisfies the service II limit state

$DIFFRENCE := 0.95 \cdot F_y \cdot R_b \cdot R_h - f_{tf}$ $\qquad DIFFRENCE = 1.7489 \cdot MPa$

$\%DIFFRENCE := \frac{DIFFRENCE \cdot 100}{0.95 \cdot F_y \cdot R_b \cdot R_h}$ $\qquad \%DIFFRENCE = 0.5336 \quad \%$

Compression flange:

Compression flange flexural stresses due to the unfactored loads:

$f_{DC1cf} := \frac{MDC1p_A}{AS_{top}}$ $\qquad f_{DC1cf} = 155.514 \cdot MPa$

$f_{DC2cf} := \frac{MDC2p_A}{AS2_{top}}$ $\qquad f_{DC2cf} = 7.6725 \cdot MPa$

$f_{DWcf} := \frac{MDWp_A}{AS2_{top}}$ $\qquad f_{DWcf} = 8.4813 \cdot MPa$

$f_{LLcf} := \frac{MLLp_A}{AS1_{top}}$ $\qquad f_{LLcf} = 36.4113 \cdot MPa$

$f_{cf} := \gamma 2_{DC} \cdot f_{DC1cf} + \gamma 2_{DC} \cdot f_{DC2cf} + \gamma 2_{DW} \cdot f_{DWcf} + \gamma 2_{LL} \cdot f_{LLcf}$ $\qquad f_{cf} = 219.0026 \cdot MPa$

$R_b := 1$ $\qquad R_h = 1$

$f_{cf} = 219.0026 \cdot MPa < 0.95 \cdot F_y \cdot R_b \cdot R_h = 327.75 \cdot MPa$

Compression flange satisfies the service II limit state

13. MAXIMUM POSITIVE SECTION AT SPAN 1 AND 3.

SECTION PROPERTIES AT SPAN 1 AND 3.

I. Non-composite section properties (n = ∞):

a.) Top flange:

$t_{tf} := 25 \cdot mm$

$b_{tf} := 350 \cdot mm$

$A_{tf} := b_{tf} \cdot t_{tf}$

$A_{tf} = 8750 \cdot mm^2$

b.) Bottom flange:

$t_{bf} := 35 \cdot mm$

$b_{bf} := 500 \cdot mm$

$A_{bf} := b_{bf} \cdot t_{bf}$

$A_{bf} = 17500 \cdot mm^2$

c.) Web:

$t_w := 18 \cdot mm$

$h_w := 2500 \cdot mm$

$A_w := t_w \cdot h_w$

$A_w = 45000 \cdot mm^2$

Distance from x axis (bottom of the whole section) to the item center of gravity - y1

$y1_{tf} := t_{bf} + h_w + 0.5 \cdot t_{tf}$

$y1_{tf} = 2547.5 \cdot mm$

$y1_{bf} := 0.5 \cdot t_{bf}$

$y1_{bf} = 17.5 \cdot mm$

$y1_w := t_{bf} + 0.5 \cdot h_w$

$y1_w = 1285 \cdot mm$

$I_{0tf} := \frac{b_{tf} \cdot t_{tf}^3}{12}$

$I_{0tf} = 455729.1667 \cdot mm^4$

$I_{0bf} := \frac{b_{bf} \cdot t_{bf}^3}{12}$

$I_{0bf} = 1.7865 \cdot 10^6 \cdot mm^4$

$I_{0w} := \frac{t_w \cdot h_w^3}{12}$

$I_{0w} = 2.3438 \cdot 10^{10} \cdot mm^4$

$s1\Sigma A_s := A_{tf} + A_{bf} + A_w$

$s1\Sigma A_s = 71250 \cdot mm^2$

$\Sigma Ay1 := A_{tf} \cdot y1_{tf} + A_{bf} \cdot y1_{bf} + A_w \cdot y1_w$

$\Sigma Ay1 = 8.0422 \cdot 10^7 \cdot mm^3$

$\Sigma I_0 := I_{0tf} + I_{0bf} + I_{0w}$

$\Sigma I_0 = 2.344 \cdot 10^{10} \cdot mm^4$

Distance from bottom of section to the neutral axis (N.A.) of whole section - Y_{sb}

$s1Y_{sb} := \frac{\Sigma Ay1}{s1\Sigma A_s}$

$s1Y_{sb} = 1128.7281 \cdot mm$

Distance from top of steel to the neutral axis (N.A.) of whole section - Y_{st}

$s1Y_{st} := (t_{tf} + h_w + t_{bf}) - s1Y_{sb}$

$s1Y_{st} = 1431.2719 \cdot mm$

Distance between item center of gravity and N.A. of whole section - y2

$y2_w := y1_w - s1Y_{sb}$

$y2_w = 156.2719 \cdot mm$

$y2_{bf} := s1Y_{sb} - y1_{bf}$

$y2_{bf} = 1111.2281 \cdot mm$

$y2_{tf} := (t_{bf} + h_w + 0.5 \cdot t_{tf}) - s1Y_{sb}$

$y2_{tf} = 1418.7719 \cdot mm$

Moment of inertia of whole steel section in respect to N.A. of whole section - I_s

$s1I_s := \Sigma I_0 + A_{tf} \cdot y2_{tf}^2 + A_{bf} \cdot y2_{bf}^2 + A_w \cdot y2_w^2$

$s1I_s = 6.3761 \cdot 10^{10} \cdot mm^4$

Section modulus of steel section:

$s1S_{top} := \frac{s1I_s}{s1Y_{st}}$ $\qquad$ $s1S_{bot} := \frac{s1I_s}{s1Y_{sb}}$

$s1S_{top} = 4.4549 \cdot 10^7 \cdot mm^3$ $\qquad$ $s1S_{bot} = 5.6489 \cdot 10^7 \cdot mm^3$

Short-term composite section properties (n):

$f_c = 28 \cdot MPa$ $\qquad$ $E_c = 25399 \cdot MPa$ $\qquad$ $E_s = 200000 \cdot MPa$

Modular ratio: $n := \frac{E_s}{E_c}$ $\qquad$ $n = 7.8743$

Haunch thickness (top flange of steel not included): $t_h := \left[(76.2 + 55) \cdot mm - t_{tf}\right]$ $\qquad$ $t_h = 0.1062 \cdot m$

Effective flange width b_{eff}:

$L_2 = 100000 \cdot mm$ $\qquad$ $T_c = 230 \cdot mm$ $\qquad$ $GS = 3700 \cdot mm$ $\qquad$ $b_{tf} = 350 \cdot mm$

$$p := \begin{cases} \frac{b_{tf}}{2} & \text{if } \frac{b_{tf}}{2} > t_w \\ t_w & \text{otherwise} \end{cases} \qquad b_{eff} := \begin{cases} \frac{L_2}{4} & \text{if } \frac{L_2}{4} < 12 \cdot T_c + p \\ 12 \cdot T_c + p & \text{otherwise} \end{cases} \qquad b_{eff} := \begin{cases} b_{eff} & \text{if } b_{eff} < GS \\ GS & \text{otherwise} \end{cases}$$

$p = 175 \cdot mm$ $\qquad$ $b_{eff} = 2.935 \cdot 10^3 \cdot mm$

a.) Concrete slab n = 9:

$b_{1c} := \frac{b_{eff}}{n}$ $\qquad$ $b_{1c} = 372.7334 \cdot mm$

$A_{1c} := T_c \cdot b_{1c}$ $\qquad$ $A_{1c} = 8.5729 \cdot 10^4 \cdot mm^2$

b.) Steel girder:

$s1\Sigma A_s = 71250 \cdot mm^2$

$s1I_s = 6.3761 \cdot 10^{10} \cdot mm^4$

$s1Y_{sb} = 1128.7281 \cdot mm$

Distance from x axis (bottom of section) to the concrete slab center of gravity - Y_1

$Y_{1c} := t_{bf} + h_w + t_{tf} + t_h + 0.5 \cdot T_c$ $\qquad$ $Y_{1c} = 2781.2 \cdot mm$

$I_{1c} := \frac{b_{1c} \cdot T_c^3}{12}$ $\qquad$ $\Sigma A_1 := A_{1c} + s1\Sigma A_s$ $\qquad$ $\Sigma I_1 := s1I_s + I_{1c}$

$I_{1c} = 3.7792 \cdot 10^8 \cdot mm^4$ $\qquad$ $\Sigma A_1 = 156978.6923 \cdot mm^2$ $\qquad$ $\Sigma I_1 = 6.4139 \cdot 10^{10} \cdot mm^4$

$\Sigma AY1 := A_{1c} \cdot Y_{1c} + s1\Sigma A_s \cdot s1Y_{sb}$ $\qquad$ $\Sigma AY1 = 3.1885 \cdot 10^8 \cdot mm^3$

Distance from x axis (bottom of section) to the neutral axis (N.A.) of composite section - $Y1_b$

$$Y1_b := \frac{\Sigma AY1}{\Sigma A_1} \qquad Y1_b = 2.0312 \cdot 10^3 \cdot mm$$

Distance from top of steel to the neutral axis (N.A.) of composite section - $Y1_t$

$$Y1_t := (t_{tf} + h_w + t_{bf}) - Y1_b \qquad Y1_t = 528.8293 \cdot mm$$

Distance between item center of gravity and N.A. of composite section - y3

steel:

$$y3_s := Y1_b - s1Y_{sb} \qquad y3_s = 902.4426 \cdot mm$$

concrete:

$$y3_c := Y1_t - \frac{T_c}{2} \qquad y3_c = 413.8293 \cdot mm$$

Composite section moment of inertia in respect to N.A. of composite section - I_{1n}

$$I_{1n} := \Sigma I_1 + s1\Sigma A_s \cdot y3_s^2 + A_{1c} \cdot y3_c^2 \qquad I_{1n} = 1.3685 \cdot 10^{11} \cdot mm^4$$

Section modulus of composite section at extreme steel fibers:

$$s1S1_{top} := \frac{I_{1n}}{(t_{bf} + h_w + t_{tf}) - Y1_b} \qquad s1S1_{top} = 2.5877 \cdot 10^8 \cdot mm^3$$

$$s1S1_{bot} := \frac{I_{1n}}{Y1_b} \qquad s1S1_{bot} = 6.7373 \cdot 10^7 \cdot mm^3$$

<u>Long-term composite section properties (3n):</u>

a.) Concrete slab - $3 \cdot n = 23.$

$$b_{2c} := \frac{b_{eff}}{3 \cdot n} \qquad b_{2c} = 124.2445 \cdot mm$$

$$A_{2c} := T_c \cdot b_{2c} \qquad A_{2c} = 2.8576 \cdot 10^4 \cdot mm^2$$

b.) Steel girder:

$$s1\Sigma A_s = 71250 \cdot mm^2$$

$$s1I_s = 6.3761 \cdot 10^{10} \cdot mm^4$$

$$s1Y_{sb} = 1128.7281 \cdot mm$$

Distance from x axis (bottom of the whole section) to the item center of gravity - Y_2

$$Y_{2c} := Y_{1c} \qquad Y_{2c} = 2781.2 \cdot mm$$

$I_{2c} := \frac{b_{2c} \cdot T_c^3}{12}$ $\Sigma A_2 := A_{2c} + s1\Sigma A_s$ $\Sigma I_2 := s1I_s + I_{2c}$

$I_{2c} = 1.2597 \cdot 10^8 \cdot mm^4$ $\Sigma A_2 = 99826.2308 \cdot mm^2$ $\Sigma I_2 = 6.3887 \cdot 10^{10} \cdot mm^4$

$\Sigma AY2 := A_{2c} \cdot Y_{2c} + s1\Sigma A_s \cdot s1Y_{sb}$ $\Sigma AY2 = 159898.088 \cdot m \cdot mm^2$

Distance from x axis (bottom of whole section) to the neutral axis (N.A.) of whole section - $Y2_b$

$Y2_b := \frac{\Sigma AY2}{\Sigma A_2}$ $Y2_b = 1.6018 \cdot 10^3 \cdot mm$

Distance from top of steel to the neutral axis (N.A.) of whole section - $Y2_t$

$Y2_t := (t_{tf} + h_w + t_{bf}) - Y2_b$ $Y2_t = 958.2357 \cdot mm$

Distance between item center of gravity and N.A. of whole section - y4

$y4_s := Y2_b - s1Y_{sb}$ $y4_c := Y2_t - \frac{T_c}{2}$

$y4_s = 473.0362 \cdot mm$ $y4_c = 843.2357 \cdot mm$

Moment of inertia of whole composite section in respect to N.A. of whole section - I_{2n}

$I_{2n} := \Sigma I_2 + s1\Sigma A_s \cdot y4_s^2 + A_{2c} \cdot y4_c^2$ $I_{2n} = 1.0015 \cdot 10^{11} \cdot mm^4$

Section modulus of composite steel section:

$s1S2_{top} := \frac{I_{2n}}{(t_{bf} + h_w + t_{tf}) - Y2_b}$ $s1S2_{bot} := \frac{I_{2n}}{Y2_b}$

$s1S2_{top} = 1.0451 \cdot 10^8 \cdot mm^3$ $s1S2_{bot} = 6.2524 \cdot 10^7 \cdot mm^3$

Live load lateral distribution factors for positive flexure - span 1.

Moment distribution to interior girder:

$L_1 = 65 \cdot m$ $\quad T_c = 230 \cdot mm$ $\quad t_{bf} = 35 \cdot mm$ $\quad s1I_s = 6.3761 \cdot 10^{10} \cdot mm^4$

$S := 3.7 \cdot m$ $\quad t_h = 106.2 \cdot mm$ $\quad t_{tf} = 25 \cdot mm$ $\quad s1\Sigma A_s = 71250 \cdot mm^2$

$h_w = 2500 \cdot mm$ $\quad s1Y_{sb} = 1128.7281 \cdot mm$

Distance between centers of gravity between of the basic beam and deck (e_g):

$$e_g := \frac{T_c}{2} + t_h + t_{tf} + h_w + t_{bf} - s1Y_{sb} \qquad e_g = 1652.4719 \cdot mm$$

Longitudinal stiffness parameter: $s1K_g := n \cdot \left(s1I_s + s1\Sigma A_s \cdot e_g^2\right)$ $\quad s1K_g = 2.0341 \cdot 10^{12} \cdot mm^4$

One design lane loaded:

$$DFMI1_1 := 0.06 + \left(\frac{S}{4300 \cdot mm}\right)^{0.4} \cdot \left(\frac{S}{L_1}\right)^{0.3} \cdot \left(\frac{s1K_g}{L_1 \cdot T_c^3}\right)^{0.1}$$

$$DFMI1_1 = 0.498$$

Two or more design lane loaded:

$$DFMI1_2 := 0.075 + \left(\frac{S}{2900 \cdot mm}\right)^{0.6} \cdot \left(\frac{S}{L_1}\right)^{0.2} \cdot \left(\frac{s1K_g}{L_1 \cdot T_c^3}\right)^{0.1}$$

$$DFMI1_2 = 0.7921$$

$$DFM1_{int} := \begin{cases} DFMI1_1 & \text{if } DFMI1_1 > DFMI1_2 \\ DFMI1_2 & \text{otherwise} \end{cases}$$

$$DFM1_{int} = 0.7921$$

All other distribution factors for regions in negative flexure for the interior girder and for the exterior girder are independent of the span length and the stiffness of the girder; therefore, they are identical to the values calculated earlier for regions in positive flexure in span 2 (L_2 = 100 [m]).

Shear distribution to interior girder:

$DFV1_{int} := DFV2_{int}$ $\quad DFV1_{int} = 1.1082$

Moment distribution to exterior girder:

$DFM1_{ext} := DFM2_{ext}$ $\quad DFM1_{ext} = 0.9865$

Shear distribution to exterior girder:

$DFV1_{ext} := DFV2_{ext}$ $\quad DFV1_{ext} = 0.9865$

SECTION DESIGN:

Span 1 strength / service limit states distribution factor: $DFM1_{int} = 0.7921$

Moments (from Qcon):

DC=DC$_1$ +DC$_2$ maximum positive moment (span 1): $MDCp_{span1} := 7387 \cdot kN \cdot m$

DC$_1$ maximum positive moment (span 1): $MDC1p_{span1} := 6756 \cdot kN \cdot m$

DC$_2$ maximum positive moment (span 1): $MDC2p_{span1} := 630.7 \cdot kN \cdot m$

DW maximum positive moment (span 1): $MDWp_{span1} := 697.1 \cdot kN \cdot m$

LL maximum positive moment (span 1): $MLLp_{span1} := 9581 \cdot kN \cdot m$
LL = (Design Truck x Impact) + Lane
Impact = 1.33

STRENGTH I:

Maximum positive moment for Strength I Limit State:

$$\eta 1 \Sigma \gamma i MSTp_{span1} := \gamma 1_{DC} \cdot MDCp_{span1} + \gamma 1_{DW} \cdot MDWp_{span1} + \gamma 1_{LL} \cdot DFM1_{int} \cdot MLLp_{span1}$$

$$\eta 1 \Sigma \gamma i MSTp_{span1} = 23559.9948 \cdot kN \cdot m$$

SERVICE II :

Maximum positive moment for Service II Limit State:

$$\eta 1 \Sigma \gamma i MSEp_{span1} := \gamma 2_{DC} \cdot MDCp_{span1} + \gamma 2_{DW} \cdot MDWp_{span1} + \gamma 2_{LL} \cdot DFM1_{int} \cdot MLLp_{span1}$$

$$\eta 1 \Sigma \gamma i MSEp_{span1} = 17949.6847 \cdot kN \cdot m$$

FATIGUE :

Span 1 fatigue limit state distribution factor: $MDF1_f := 0.420$

LL + Impact maximum positive moment (span 2): $MLLfp_{span1} := 4387 \cdot kN \cdot m$
LL = Fatigue Truck x Impact
Impact = 1.15

$$\eta 1 \Sigma \gamma i Mfp_{span1} := \gamma 3_{LL} \cdot MDF1_f \cdot MLLfp_{span1}$$

$$\eta 1 \Sigma \gamma i Mfp_{span1} = 1381.905 \cdot kN \cdot m$$

Location of the plastic neutral axis (PNA).

$\Sigma A_s = 101700 \cdot mm^2$ $F_y = 345 \cdot MPa$ $f_c = 28 \cdot MPa$ $b_{eff} = 2935 \cdot mm$ $T_c := 230 \cdot mm$ $t_h = 106.2 \cdot mm$

a.) Top flange:	b.) Bottom flange:	c.) Web:
$t_{tf} = 25 \cdot mm$	$t_{bf} = 35 \cdot mm$	$t_w = 18 \cdot mm$
$b_{tf} = 350 \cdot mm$	$b_{bf} = 500 \cdot mm$	$h_w = 2500 \cdot mm$

Plastic forces:

Reinforcement (assuming deck reinforcement area = 1% of deck area)

Top reinforcement:	$P_{rt} := f_y \cdot b_{eff} T_c \cdot 0.005$	$P_{rt} = 1417.605 \cdot kN$
Bottom reinforcement:	$P_{rb} := f_y \cdot b_{eff} T_c \cdot 0.005$	$P_{rb} = 1417.605 \cdot kN$
Reinforced concrete deck slab:	$P_s := 0.85 \cdot f_c \cdot b_{eff} T_c$	$P_s = 16066.19 \cdot kN$
Compression flange:	$P_c := F_y \cdot b_{tf} \cdot t_{tf}$	$P_c = 3018.75 \cdot kN$
Web:	$P_w := F_y \cdot h_w \cdot t_w$	$P_w = 15525 \cdot kN$
Tension flange:	$P_t := F_y \cdot b_{bf} \cdot t_{bf}$	$P_t = 6037.5 \cdot kN$

$P_t + P_w + P_c = 24581.25 \cdot kN$ $P_s + P_{rt} + P_{rb} = 18901.4 \cdot kN$

$P_t + P_w + P_c \geq P_s + P_{rt} + P_{rb}$ PNA in top flange

Calculation of distance Y_{PNA} from top of top compresion flange to PNA (Y_{PNA})

$$Y_{PNA} := \begin{cases} \left[\frac{h_w}{2} \cdot \left(\frac{P_t - P_c - P_s - P_{rt} - P_{rb}}{P_w} + 1\right)\right] & \text{if } P_t + P_w \geq P_c + P_s + P_{rb} + P_{rt} \quad \text{PNA in web} \\ \left[\frac{t_{tf}}{2} \cdot \left(\frac{P_w + P_t - P_s - P_{rt} - P_{rb}}{P_c} + 1\right)\right] & \text{otherwise} \quad \text{PNA in top flange} \end{cases}$$

PNA in top flange: $Y_{PNA} = 23.519 \cdot mm$

Calculation of plastic moment capacity (M_p).

$t_h = 0.1062 \cdot m$ $CL_{rt} := 50 \cdot mm$ $CL_{rb} := 25 \cdot mm$ $DIA_{rt} := 15.9 \cdot mm$ $DIA_{rb} := 15.9 \cdot mm$

Distance from P_{rt} to PNA: $d_{rt} := T_c - \left(CL_{rt} + \frac{DIA_{rt}}{2}\right) + t_h + Y_{PNA}$ $d_{rt} = 301.8 \cdot mm$

Distance from P_{rb} to PNA: $d_{rb} := CL_{rb} + \frac{DIA_{rb}}{2} + t_h + Y_{PNA}$ $d_{rb} = 162.7 \cdot mm$

Distance from P_s to PNA: $d_s := \frac{T_c}{2} + t_h + Y_{PNA}$ $d_s = 244.7 \cdot mm$

Distance from P_w to PNA: $d_w := \frac{h_w}{2} + \left(t_{tf} - Y_{PNA}\right)$ $d_w = 1251.5 \cdot mm$

Distance from P_t to PNA: $d_t := \frac{t_{bf}}{2} + h_w + \left(t_{tf} - Y_{PNA}\right)$ $d_t = 2519 \cdot mm$

$$M_p := \frac{P_w}{2 \cdot t_{tf}} \cdot \left[Y_{PNA}^2 + \left(t_{tf} - Y_{PNA}\right)^2\right] + \left(P_s \cdot d_s + P_{rt} \cdot d_{rt} + P_{rb} \cdot d_{rb} + P_w \cdot d_w + P_t \cdot d_t\right)$$

$M_p = 39400.1145 \cdot kN \cdot m$

Check if the section qualifies as a compact section.

Ductility requirement: $\frac{D_p}{D_I} \le 5$

Distance from top of concrete deck slab to PNA: $D_p := T_c + t_h + Y_{PNA}$ $D_p = 359.719 \cdot mm$

$\beta := 0.7$ for $F_y = 345 \cdot M:^{\circ}a$ $D_I := \frac{t_{bf} + h_w + t_{tf} + T_c + t_h}{7.5} \cdot \beta$ $D_I = 270.312 \cdot mm$

$$D_p = 359.719 \cdot mm < \frac{h_w + t_{tf} + t_{bf} + T_c + t_h}{7.5} = 386.16 \cdot mm$$

$\frac{D_p}{D_I} = 1.3308 < 5$ Ductility requirement satisfied

Nominal flexural resistance requirement (M_n):

For continuous span with non-compact interior support section:

$M_{D1} := MDC1p_{span1} \cdot \gamma 1_{DC}$ $M_{D1} = 8445 \cdot kN \cdot m$ $F_y = 345000 \cdot \frac{kN}{m^2}$

$M_{D2} := MDC2p_{span1} \cdot \gamma 1_{DC} + MDWp_{span1} \cdot \gamma 1_{DW}$ $M_{D2} = 1834.025 \cdot kN \cdot m$

$s1S_{bot} = 5.6489 \cdot 10^7 \cdot mm^3$ $s1S1_{bot} = 6.7373 \cdot 10^7 \cdot mm^3$ $s1S2_{bot} = 6.2524 \cdot 10^7 \cdot mm^3$

$$F_y = \left(\frac{M_{D1}}{s1S_{bot}} + \frac{M_{D2}}{s1S2_{bot}} + \frac{M_{AD}}{s1S1_{bot}}\right) \cdot \eta 1$$

$$M_{AD} := \frac{\left(F_y - \eta 1 \cdot \frac{M_{D1}}{s1S_{bot}} - \eta 1 \cdot \frac{M_{D2}}{s1S2_{bot}}\right)}{\eta 1} \cdot s1S1_{bot} \qquad M_{AD} = 11195.4218 \cdot kN \cdot m$$

$M_y := M_{D1} + M_{D2} + M_{AD}$

$M_y = 21474.4468 \cdot kN \cdot m$

(My - yield moment taken as a sum of moments due to factored loads at the strength limit state applied separately to steel, long-term composite and short-term composite sections to cause first yield in either steel flange)

$R_h := 1$ - Flange-stress reduction factor (equal to 1 for homogenous section)

$M_n := 1.3 \cdot R_h \cdot M_y \qquad M_n = 27916.7808 \cdot kN \cdot m \qquad M_p = 39400.1145 \cdot kN \cdot m$

$M_n \le M_p$ **O.K.**

Web slenderness requirement:

$$\frac{2 \cdot D_{cp}}{t_w} \le 3.76 \cdot \sqrt{\frac{E_s}{F_y}}$$

Depth of the web in compression at the plastic moment - D_{cp}

Earlier computations in 9.1. showed that the PNA is in the top flange at plastic moment (M_p). Therefore, since the depth of the web in compression at M_p is equal zero ($D_{cp} := 0$), the web slenderness requirement is automatically satisfied.

Section proportions requirement:

$$0.1 \le \frac{I_{yc}}{I_y} \le 0.9$$

Moment of interia of the steel section about the vertical axis in the plane of the web in [mm^4]:

$$I_y := \frac{t_{bf} \cdot b_{bf}^3}{12} + \frac{h_w \cdot t_w^3}{12} + \frac{t_{tf} \cdot b_{tf}^3}{12} \qquad I_y = 4.5512 \cdot 10^8 \cdot mm^4$$

Moment of interia of the compression flange of the steel section about the vertical axis in the plane of the web in [mm^4]:

$$I_{yc} := \frac{t_{tf} \cdot b_{tf}^3}{12} \qquad I_{yc} = 8.9323 \cdot 10^7 \cdot mm^4$$

$$0.1 < \frac{I_{yc}}{I_y} = 0.1963 < 0.9$$ Section proportions requirement satisfied

STRENGTH LIMIT STATE FOR FLEXURE:

$$M_u \le \phi_f \cdot M_n$$

$M_u := \eta 1 \Sigma \gamma i MSTp_{span1}$

$\phi_f := 1.0$

$M_n = 27916.7808 \cdot kN \cdot m$

$M_u = 23559.9948 \cdot kN \cdot m < \phi_f M_n = 27916.7808 \cdot kN \cdot m$

Section satisfies the strength I limit state for flexure

SERVICE II LIMIT STATE:

$$0.95 \cdot F_y \cdot R_b \cdot R_h \ge f_f$$

Tension flange:

Tension flange flexural stresses due to the unfactored loads:

$f_{DC1tf} := \frac{MDC1p_{span1}}{s1S_{bot}}$ $\qquad f_{DC1tf} = 119.5977 \cdot MPa$

$f_{DC2tf} := \frac{MDC2p_{span1}}{s1S2_{bot}}$ $\qquad f_{DC2tf} = 10.0873 \cdot MPa$

$f_{DWtf} := \frac{MDWp_{span1}}{s1S2_{bot}}$ $\qquad f_{DWtf} = 11.1493 \cdot MPa$

$f_{LLtf} := \frac{MLLp_{span1}}{s1S1_{bot}}$ $\qquad f_{LLtf} = 142.2076 \cdot MPa$

$f_{tf} := \gamma 2_{DC} \cdot f_{DC1tf} + \gamma 2_{DC} \cdot f_{DC2tf} + \gamma 2_{DW} \cdot f_{DWtf} + \gamma 2_{LL} \cdot f_{LLtf}$ $\qquad f_{tf} = 325.7041 \cdot MPa$

$R_b = 1$ $R_h = 1$ $f_{tf} = 325.7041 \cdot MPa$ < $0.95 \cdot F_y \cdot R_b \cdot R_h = 327.75 \cdot MPa$

Tension flange satisfies the service II limit state

$DIFFRENCE := 0.95 \cdot F_y \cdot R_b \cdot R_h - f_{tf}$ $DIFFRENCE = 2.0459 \cdot MPa$

$\%DIFFRENCE := \frac{DIFFRENCE \cdot 100}{0.95 \cdot F_y \cdot R_b \cdot R_h}$ $\%DIFFRENCE = 0.6242$ %

Compression flange:

Compression flange flexural stresses due to the unfactored loads:

$f_{DC1cf} := \frac{MDC1p_{span1}}{s1S_{top}}$ $f_{DC1cf} = 151.6546 \cdot MPa$

$f_{DC2cf} := \frac{MDC2p_{span1}}{s1S2_{top}}$ $f_{DC2cf} = 6.0346 \cdot MPa$

$f_{DWcf} := \frac{MDWp_{span1}}{s1S2_{top}}$ $f_{DWcf} = 6.6699 \cdot MPa$

$f_{LLcf} := \frac{MLLp_{span1}}{s1S1_{top}}$ $f_{LLcf} = 37.0247 \cdot MPa$

$f_{cf} := \gamma 2_{DC} \cdot f_{DC1cf} + \gamma 2_{DC} \cdot f_{DC2cf} + \gamma 2_{DW} \cdot f_{DWcf} + \gamma 2_{LL} \cdot f_{LLcf}$ $f_{cf} = 212.4912 \cdot MPa$

$R_b := 1$ $R_h = 1$ $f_{cf} = 212.4912 \cdot MPa$ < $0.95 \cdot F_y \cdot R_b \cdot R_h = 327.75 \cdot MPa$

Compression flange satisfies the service II limit state

14. CHANGE IN FLANGE THICKNESS AT POINT "E" (SPAN 1 AND 3).

SECTION PROPERTIES BETWEEN POINT "E" AND EXTERIOR SUPPORT.

Point "E" in exterior span is located 13.5 [m] from exterior support (pt. 0.2078 of span 2).

Non-composite section properties (n = ∞):

a.) Top flange:

$t_{tf} := 20 \cdot mm$

$b_{tf} := 300 \cdot mm$

$A_{tf} := b_{tf} \cdot t_{tf}$

$A_{tf} = 6000 \cdot mm^2$

b.) Bottom flange:

$t_{bf} := 25 \cdot mm$

$b_{bf} := 450 \cdot mm$

$A_{bf} := b_{bf} \cdot t_{bf}$

$A_{bf} = 11250 \cdot mm^2$

c.) Web:

$t_w := 18 \cdot mm$

$h_w := 2500 \cdot mm$

$A_w := t_w \cdot h_w$

$A_w = 45000 \cdot mm^2$

Distance from x axis (bottom of the whole section) to the item center of gravity - y1

$y1_{tf} := t_{bf} + h_w + 0.5 \cdot t_{tf}$

$y1_{tf} = 2535 \cdot mm$

$y1_{bf} := 0.5 \cdot t_{bf}$

$y1_{bf} = 12.5 \cdot mm$

$y1_w := t_{bf} + 0.5 \cdot h_w$

$y1_w = 1275 \cdot mm$

$I_{0tf} := \frac{b_{tf} \cdot t_{tf}^3}{12}$

$I_{0tf} = 200000 \cdot mm^4$

$I_{0bf} := \frac{b_{bf} \cdot t_{bf}^3}{12}$

$I_{0bf} = 585937.5 \cdot mm^4$

$I_{0w} := \frac{t_w \cdot h_w^3}{12}$

$I_{0w} = 2.3438 \cdot 10^{10} \cdot mm^4$

$E\Sigma A_s := A_{tf} + A_{bf} + A_w$

$E\Sigma A_s = 62250 \cdot mm^2$

$E\Sigma Ay1 := A_{tf} \cdot y1_{tf} + A_{bf} \cdot y1_{bf} + A_w \cdot y1_w$

$E\Sigma Ay1 = 7.2726 \cdot 10^7 \cdot mm^3$

$\Sigma I_0 := I_{0tf} + I_{0bf} + I_{0w}$

$\Sigma I_0 = 2.3438 \cdot 10^{10} \cdot mm^4$

Distance from bottom of section to the neutral axis (N.A.) of whole section - Y_{sb}

$EY_{sb} := \frac{E\Sigma Ay1}{E\Sigma A_s}$

$EY_{sb} = 1168.2831 \cdot mm$

Distance from top of steel to the neutral axis (N.A.) of whole section - Y_{st}

$EY_{st} := (t_{tf} + h_w + t_{bf}) - EY_{sb}$

$EY_{st} = 1376.7169 \cdot mm$

Distance between item center of gravity and N.A. of whole section - y2

$y2_w := y1_w - EY_{sb}$

$y2_w = 106.7169 \cdot mm$

$y2_{bf} := EY_{sb} - y1_{bf}$

$y2_{bf} = 1155.7831 \cdot mm$

$y2_{tf} := (t_{bf} + h_w + 0.5 \cdot t_{tf}) - EY_{sb}$

$y2_{tf} = 1366.7169 \cdot mm$

Moment of inertia of whole steel section in respect to N.A. of whole section - I_s

$EI_s := \Sigma I_0 + A_{tf} \cdot y2_{tf}^2 + A_{bf} \cdot y2_{bf}^2 + A_w \cdot y2_w^2$ $\qquad EI_s = 5.0186 \cdot 10^{10} \cdot mm^4$

Section modulus of steel section:

$ES_{top} := \frac{EI_s}{EY_{st}}$ $\qquad ES_{bot} := \frac{EI_s}{EY_{sb}}$

$ES_{top} = 3.6454 \cdot 10^7 \cdot mm^3$ $\qquad ES_{bot} = 4.2957 \cdot 10^7 \cdot mm^3$

<u>Short-term composite section properties (n):</u>

$f_c = 28 \cdot MPa$ $\qquad E_c = 25399 \cdot MPa$ $\qquad E_s = 200000 \cdot MPa$

Modular ratio: $n := \frac{E_s}{E_c}$ $\qquad n = 7.8743$

Haunch thickness (top flange of steel not included): $t_h := \left[(76.2 + 55) \cdot mm - t_{tf}\right]$ $\qquad t_h = 111.2 \cdot mm$

Effective flange width b_{eff}:

$b_{tf} = 300 \cdot mm$ $\qquad L_2 = 100000 \cdot mm$ $\qquad T_c = 230 \cdot mm$ $\qquad GS = 3700 \cdot mm$

$$p := \begin{cases} \frac{b_{tf}}{2} & \text{if } \frac{b_{tf}}{2} > t_w \\ t_w & \text{otherwise} \end{cases} \qquad b_{eff} := \begin{cases} \frac{L_2}{4} & \text{if } \frac{L_2}{4} < 12 \cdot T_c + p \\ 12 \cdot T_c + p & \text{otherwise} \end{cases}$$

$p = 150 \cdot mm$

$$b_{eff} := \begin{cases} b_{eff} & \text{if } b_{eff} < GS \\ GS & \text{otherwise} \end{cases}$$

$b_{eff} = 2.91 \cdot 10^3 \cdot mm$

a.) Concrete slab n = 9:

$b_{1c} := \frac{b_{eff}}{n}$ $\qquad b_{1c} = 369.5585 \cdot mm$

$A_{1c} := T_c \cdot b_{1c}$ $\qquad A_{1c} = 8.4998 \cdot 10^4 \cdot mm^2$

b.) Steel girder:

$E\Sigma A_s = 62250 \cdot mm^2$

$EI_s = 5.0186 \cdot 10^{10} \cdot mm^4$

$EY_{sb} = 1168.2831 \cdot mm$

Distance from x axis (bottom of section) to the concrete slab center of gravity - Y_1

$Y_{1c} := t_{bf} + h_w + t_{tf} + t_h + 0.5 \cdot T_c$ $\qquad Y_{1c} = 2771.2 \cdot mm$

$I_{1c} := \frac{b_{1c} \cdot T_c^3}{12}$ $\qquad \Sigma A_1 := A_{1c} + E\Sigma A_s$ $\qquad \Sigma I_1 := EI_s + I_{1c}$

$I_{1c} = 3.747 \cdot 10^8 \cdot mm^4$ $\qquad \Sigma A_1 = 147248.4649 \cdot mm^2$ $\qquad \Sigma I_1 = 5.0561 \cdot 10^{10} \cdot mm^4$

$\Sigma AY1 := A_{1c} \cdot Y_{1c} + E\Sigma A_s \cdot EY_{sb}$ $\qquad \Sigma AY1 = 3.0827 \cdot 10^8 \cdot mm^3$

Distance from x axis (bottom of section) to the neutral axis (N.A.) of composite section - $Y1_b$

$Y1_b := \frac{\Sigma AY1}{\Sigma A_1}$ $\qquad Y1_b = 2.0936 \cdot 10^3 \cdot mm$

Distance from top of steel to the neutral axis (N.A.) of composite section - $Y1_t$

$Y1_t := (t_{tf} + h_w + t_{bf}) - Y1_b$ $\qquad Y1_t = 451.4409 \cdot mm$

Distance between item center of gravity and N.A. of composite section - y3

steel: $\qquad$ concrete:

$y3_s := Y1_b - EY_{sb}$ $\qquad y3_c := Y1_t - \frac{T_c}{2}$

$y3_s = 925.276 \cdot mm$ $\qquad y3_c = 336.4409 \cdot mm$

Composite section moment of inertia in respect to N.A. of composite section - I_{1n}

$I_{1n} := \Sigma I_1 + E\Sigma A_s \cdot y3_s^2 + A_{1c} \cdot y3_c^2$ $\qquad I_{1n} = 1.1348 \cdot 10^{11} \cdot mm^4$

Section modulus of composite section at extreme steel fibers:

$ES1_{top} := \frac{I_{1n}}{(t_{bf} + h_w + t_{tf}) - Y1_b}$ $\qquad ES1_{bot} := \frac{I_{1n}}{Y1_b}$

$ES1_{top} = 2.5137 \cdot 10^8 \cdot mm^3$ $\qquad ES1_{bot} = 5.4203 \cdot 10^7 \cdot mm^3$

Long-term composite section properties (3n):

a.) Concrete slab - $3 \cdot n = 23.$

$b_{2c} := \frac{b_{eff}}{3 \cdot n}$ $\quad b_{2c} = 123.1862 \cdot mm$

$A_{2c} := T_c \cdot b_{2c}$ $\quad A_{2c} = 2.8333 \cdot 10^4 \cdot mm^2$

b.) Steel girder:

$E\Sigma A_s = 62250 \cdot mm^2$

$EI_s = 5.0186 \cdot 10^{10} \cdot mm^4$

$EY_{sb} = 1168.2831 \cdot mm$

Distance from x axis (bottom of section) to the concrete slab center of gravity - Y_2

$Y_{2c} := Y_{1c}$ $\quad Y_{2c} = 2771.2 \cdot mm$

$I_{2c} := \frac{b_{2c} \cdot T_c^3}{12}$ $\quad \Sigma A_2 := A_{2c} + E\Sigma A_s$ $\quad \Sigma I_2 := EI_s + I_{2c}$

$I_{2c} = 1.249 \cdot 10^8 \cdot mm^4$ $\quad \Sigma A_2 = 90582.8216 \cdot mm^2$ $\quad \Sigma I_2 = 5.0311 \cdot 10^{10} \cdot mm^4$

$\Sigma AY2 := A_{2c} \cdot Y_{2c} + E\Sigma A_s \cdot EY_{sb}$ $\quad \Sigma AY2 = 151241.5403 \cdot m \cdot mm^2$

Distance from x axis (bottom of section) to the neutral axis (N.A.) of composite section - $Y2_b$

$Y2_b := \frac{\Sigma AY2}{\Sigma A_2}$ $\quad Y2_b = 1.6696 \cdot 10^3 \cdot mm$

Distance from top of steel to the neutral axis (N.A.) of composite section - $Y2_t$

$Y2_t := (t_{tf} + h_w + t_{bf}) - Y2_b$ $\quad Y2_t = 875.3507 \cdot mm$

Distance between item center of gravity and N.A. of composite section - y4

steel: $\quad$ concrete slab:

$y4_s := Y2_b - EY_{sb}$ $\quad y4_c := Y2_t - \frac{T_c}{2}$

$y4_s = 501.3661 \cdot mm$ $\quad y4_c = 760.3507 \cdot mm$

Composite section moment of inertia in respect to N.A. of composite section - I_{2n}

$I_{2n} := \Sigma I_2 + E\Sigma A_s \cdot y4_s^2 + A_{2c} \cdot y4_c^2$ $\quad I_{2n} = 8.2339 \cdot 10^{10} \cdot mm^4$

Section modulus of composite section at extreme steel fibers:

$ES2_{top} := \frac{I_{2n}}{t_{bf} + h_w + t_{tf} - Y2_b}$ $\quad ES2_{bot} := \frac{I_{2n}}{Y2_b}$

$ES2_{top} = 9.4064 \cdot 10^7 \cdot mm^3$ $\quad ES2_{bot} = 4.9315 \cdot 10^7 \cdot mm^3$

Live load lateral distribution factors for positive flexure between point A nad B - span 2.

Moment distribution to interior girder:

$L_1 = 65 \cdot m$ $\quad T_c = 230 \cdot mm$ $\quad t_{bf} = 25 \cdot mm$ $\quad EI_s = 5.0186 \cdot 10^{10} \cdot mm^4$

$S = 3.7 \cdot m$ $\quad h_w = 2500 \cdot mm$ $\quad t_{tf} = 20 \cdot mm$ $\quad E\Sigma A_s = 62250 \cdot mm^2$

$t_h = 111.2 \cdot mm$ $\quad EY_{sb} = 1168.2831 \cdot mm$

Distance between centers of gravity between of the basic beam and deck (e_g):

$$e_g := \frac{T_c}{2} + t_h + t_{tf} + h_w + t_{bf} - EY_{sb} \qquad e_g = 1602.9169 \cdot mm$$

Longitudinal stiffness parameter: $EK_g := n \cdot \left(EI_s + E\Sigma A_s \cdot e_g^2\right)$ $\qquad EK_g = 1.6546 \cdot 10^{12} \cdot mm^4$

One design lane loaded:

$$DFMIE_1 := 0.06 + \left(\frac{S}{4300 \cdot mm}\right)^{0.4} \cdot \left(\frac{S}{L_2}\right)^{0.3} \cdot \left(\frac{EK_g}{L_2 \cdot T_c^3}\right)^{0.1}$$

$$DFMIE_1 = 0.4212$$

Two or more design lane loaded:

$$DFMIE_2 := 0.075 + \left(\frac{S}{2900 \cdot mm}\right)^{0.6} \cdot \left(\frac{S}{L_2}\right)^{0.2} \cdot \left(\frac{EK_g}{L_2 \cdot T_c^3}\right)^{0.1}$$

$$DFMIE_2 = 0.6923$$

$$DFME_{int} := \begin{cases} DFMIE_1 & \text{if } DFMIE_1 > DFMIE_2 \\ DFMIE_2 & \text{otherwise} \end{cases}$$

$$DFME_{int} = 0.6923$$

All other distribution factors for regions in negative flexure for the interior girder and for the exterior girder are independent of the span length and the stiffness of the girder; therefore, they are identical to the values calculated earlier for regions in maximum positive flexure in span 2.

Shear distribution to interior girder:

$$DFV1_{int} = 1.1082$$

Moment distribution to exterior girder:

$$DFM1_{ext} = 0.9865$$

Shear distribution to exterior girder:

$$DFV1_{ext} = 0.9865$$

Point "E" in interior span is located 13.5 [m] from interior support (pt. 0.2078 of span 1).

MOMENTS AT POINT "E".

DC=DC$_1$ +DC$_2$ positive moment:

$MDCp_{0.2} := 6335 \cdot kN \cdot m$ $\qquad$ $MDCp_{0.3} := 7387 \cdot kN \cdot m$

$$MDCp_E := \frac{(MDCp_{0.3} - MDCp_{0.2}) \cdot 0.78}{10} + MDCp_{0.2} \qquad MDCp_E = 6417.056 \cdot kN \cdot m$$

DC$_1$ positive moment:

$MDC1p_{0.2} := 5794 \cdot kN \cdot m$ $\qquad$ $MDC1p_{0.3} := 6756 \cdot kN \cdot m$

$$MDC1p_E := \frac{(MDC1p_{0.3} - MDC1p_{0.2}) \cdot 0.78}{10} + MDC1p_{0.2} \qquad MDC1p_E = 5869.036 \cdot kN \cdot m$$

DC$_2$ positive moment:

$MDC2p_{0.2} := 540.9 \cdot kN \cdot m$ $\qquad$ $MDC2p_{0.3} := 630.7 \cdot kN \cdot m$

$$MDC2p_E := \frac{(MDC2p_{0.3} - MDC2p_{0.2}) \cdot 0.78}{10} + MDC2p_{0.2} \qquad MDC2p_E = 547.9044 \cdot kN \cdot m$$

DW positive moment:

$MDWp_{0.2} := 597.8 \cdot kN \cdot m$ $\qquad$ $MDWp_{0.3} := 697.1 \cdot kN \cdot m$

$$MDWp_E := \frac{(MDWp_{0.3} - MDWp_{0.2}) \cdot 0.78}{10} + MDWp_{0.2} \qquad MDWp_E = 605.5454 \cdot kN \cdot m$$

LL positive moment:
LL = (Design Truck x Impact) + Lane
Impact = 1.33

$MLLp_{0.2} := 6822 \cdot kN \cdot m$ $\qquad$ $MLLp_{0.3} := 8673 \cdot kN \cdot m$

$$MLLp_E := \frac{(MLLp_{0.3} - MLLp_{0.2}) \cdot 0.78}{10} + MLLp_{0.2} \qquad MLLp_E = 6966.378 \cdot kN \cdot m$$

Positive moment for Strength I Limit State at point 'E":

$$\eta 1 \Sigma \gamma i MSTp_E := \gamma 1_{DC} \cdot MDCp_E + \gamma 1_{DW} \cdot MDWp_E + \gamma 1_{LL} \cdot DFME_{int} \cdot MLLp_E$$

$$\eta 1 \Sigma \gamma i MSTp_E = 17369.1861 \cdot kN \cdot m$$

SECTION DESIGN.

Location of the plastic neutral axis (PNA).

$F_y = 345 \cdot MPa$ $\quad f_c = 28 \cdot MPa$ $\quad b_{eff} = 2910 \cdot mm$ $\quad T_c := 230 \cdot mm$ $\quad t_h = 111.2 \cdot mm$

a.) Top flange:

$t_{tf} = 20 \cdot mm$

$b_{tf} = 300 \cdot mm$

b.) Bottom flange:

$t_{bf} = 25 \cdot mm$

$b_{bf} = 450 \cdot mm$

c.) Web:

$t_w = 18 \cdot mm$

$h_w = 2500 \cdot mm$

Plastic forces:

Reinforcement (assuming deck reinforcement area = 1% of deck area)

Top reinforcement:	$P_{rt} := f_y \cdot b_{eff} \cdot T_c \cdot 0.005$	$P_{rt} = 1405.53 \cdot kN$
Bottom reinforcement:	$P_{rb} := f_y \cdot b_{eff} \cdot T_c \cdot 0.005$	$P_{rb} = 1405.53 \cdot kN$
Reinforced concrete deck slab:	$P_s := 0.85 \cdot f_c \cdot b_{eff} \cdot T_c$	$P_s = 15929.34 \cdot kN$
Compression flange:	$P_c := F_y \cdot b_{tf} \cdot t_{tf}$	$P_c = 2070 \cdot kN$
Web:	$P_w := F_y \cdot h_w \cdot t_w$	$P_w = 15525 \cdot kN$
Tension flange:	$P_t := F_y \cdot b_{bf} \cdot t_{bf}$	$P_t = 3881.25 \cdot kN$

$P_t + P_w + P_c = 21476.25 \cdot kN$ $\qquad P_s + P_{rt} + P_{rb} = 18740.4 \cdot kN$

$P_t + P_w + P_c \geq P_s + P_{rt} + P_{rb}$ PNA in top flange

Calculation of distance Y_{PNA} from top of top compresion flange to PNA (Y_{PNA}):

$$Y_{PNA} := \begin{cases} \left[\frac{h_w}{2} \cdot \left(\frac{P_t - P_c - P_s - P_{rt} - P_{rb}}{P_w} + 1\right)\right] & \text{if } P_t + P_w \geq P_c + P_s + P_{rb} + P_{rt} \quad \text{PNA in web} \\ \left[\frac{t_{tf}}{2} \cdot \left(\frac{P_w + P_t - P_s - P_{rt} - P_{rb}}{P_c} + 1\right)\right] & \text{otherwise} \quad \text{PNA in top flange} \end{cases}$$

PNA in top flange: $\quad Y_{PNA} = 13.2167 \cdot mm$

Calculation of plastic moment capacity (M_p):

$t_h = 0.1112 \cdot m$ $\quad CL_{rt} := 50 \cdot mm$ $\quad CL_{rb} := 25 \cdot mm$ $\quad DIA_{rt} := 15.9 \cdot mm$ $\quad DIA_{rb} := 15.9 \cdot mm$

Distance from P_{rt} to PNA: $\quad d_{rt} := T_c - \left(CL_{rt} + \frac{DIA_{rt}}{2}\right) + t_h + Y_{PNA}$ $\quad d_{rt} = 296.5 \cdot mm$

Distance from P_{rb} to PNA: $\quad d_{rb} := CL_{rb} + \frac{DIA_{rb}}{2} + t_h + Y_{PNA}$ $\quad d_{rb} = 157.4 \cdot mm$

Distance from P_s to PNA: $\quad d_s := \frac{T_c}{2} + t_h + Y_{PNA}$ $\quad d_s = 239.4 \cdot mm$

Distance from P_w to PNA: $\quad d_w := \frac{h_w}{2} + (t_{tf} - Y_{PNA})$ $\quad d_w = 1256.8 \cdot mm$

Distance from P_t to PNA: $\quad d_t := \frac{t_{bf}}{2} + h_w + (t_{tf} - Y_{PNA})$ $\quad d_t = 2519.3 \cdot mm$

$$M_p := \frac{P_w}{2 \cdot t_{tf}} \cdot \left[Y_{PNA}^2 + (t_{tf} - Y_{PNA})^2\right] + (P_s \cdot d_s + P_{rt} \cdot d_{rt} + P_{rb} \cdot d_{rb} + P_w \cdot d_w + P_t \cdot d_t)$$

$M_p = 33826.8124 \cdot kN \cdot m$

Check if the section qualifies as a compact section.

Ductility requirement: $\quad \frac{D_p}{D_I} \le 5$

Distance from top of concrete deck slab to PNA: $\quad D_p := T_c + t_h + Y_{PNA}$ $\quad D_p = 354.4167 \cdot mm$

$\beta := 0.7$ $\quad$ for $F_y = 345 \cdot M$:?a $\quad D_I := \frac{t_{bf} + h_w + t_{tf} + T_c + t_h}{7.5} \cdot \beta$ $\quad D_I = 269.3787 \cdot mm$

$$D_p = 354.4167 \cdot mm < \frac{h_w + t_{tf} + t_{bf} + T_c + t_h}{7.5} = 384.8267 \cdot mm$$

$\frac{D_p}{D_I} = 1.3157 < 5$ $\quad$ Ductility requirement satisfied

Nominal flexural resistance requirement (M_n).

For continuous span with non-compact interior support section:

$M_{D1} := MDC1p_E \cdot \gamma 1_{DC}$ $\quad M_{D1} = 7336.295 \cdot kN \cdot m$ $\quad F_y = 345000 \cdot \frac{kN}{m^2}$

$M_{D2} := MDC2p_E \cdot \gamma 1_{DC} + MDWp_E \cdot \gamma 1_{DW}$ $\quad M_{D2} = 1593.1986 \cdot kN \cdot m$

$ES_{bot} = 4.2957 \cdot 10^7 \cdot mm^3$ $\quad ES1_{bot} = 5.4203 \cdot 10^7 \cdot mm^3$ $\quad ES2_{bot} = 4.9315 \cdot 10^7 \cdot mm^3$

$$F_y = \left(\frac{M_{D1}}{ES_{bot}} + \frac{M_{D2}}{ES2_{bot}} + \frac{M_{AD}}{ES1_{bot}}\right)\cdot\eta 1$$

$$M_{AD} := \frac{\left(F_y - \eta 1\cdot\frac{M_{D1}}{ES_{bot}} - \eta 1\cdot\frac{M_{D2}}{ES2_{bot}}\right)}{\eta 1}\cdot ES1_{bot} \qquad M_{AD} = 7692.0705\cdot kN\cdot m$$

$M_y := M_{D1} + M_{D2} + M_{AD}$

$M_y = 16621.5641\cdot kN\cdot m$

(My - yield moment taken as a sum of moments due to factored loads at the strength limit state applied separately to steel, long-term composite and short-term composite sections to cause first yield in either steel flange)

$R_h := 1$ - Flange-stress reduction factor (equal to 1 for homogenous section)

$M_n := 1.3\cdot R_h\cdot M_y \qquad M_n = 21608.0333\cdot kN\cdot m \qquad M_p = 33826.8124\cdot kN\cdot m$

$M_n \le M_p$ **O.K.**

Web slenderness requirement: $\frac{2\cdot D_{cp}}{t_w} \le 3.76\cdot\sqrt{\frac{E_s}{F_y}}$

Depth of the web in compression at the plastic moment - D_{cp}

Earlier computations in 9.1. showed that the PNA is in the top flange at plastic moment (M_p). Therefore, since the depth of the web in compression at M_p is equal zero ($D_{cp} := 0$), the web slenderness requirement is automatically satisfied.

Section proportions requirement: $0.1 \le \frac{I_{yc}}{I_y} \le 0.9$

Moment of interia of the steel section about the vertical axis in the plane of the web in [mm^4]:

$$I_y := \frac{t_{bf}\cdot b_{bf}^3}{12} + \frac{h_w\cdot t_w^3}{12} + \frac{t_{tf}\cdot b_{tf}^3}{12} \qquad I_y = 2.3606\cdot 10^8\ \cdot mm^4$$

Moment of interia of the compression flange of the steel section about the vertical axis in the plane of the web in [mm^4]:

$$I_{yc} := \frac{t_{tf}\cdot b_{tf}^3}{12} \qquad I_{yc} = 4.5\cdot 10^7\ \cdot mm^4$$

$0.1 < \frac{I_{yc}}{I_y} = 0.1906 < 0.9$ Section proportions requirement satisfied

STRENGTH LIMIT STATE FOR FLEXURE:

$$M_u \le \phi_f M_n$$

$M_u := \eta 1 \Sigma \gamma i MSTp_E$

$\phi_f := 1.0$

$M_n = 21608.0333 \cdot kN \cdot m$

$$M_u = 17369.1861 \cdot kN \cdot m < \phi_f M_n = 21608.0333 \cdot kN \cdot m$$

Section satisfies the strength I limit state for flexure

SERVICE II LIMIT STATE:

$$0.95 \cdot F_y \cdot R_b \cdot R_h \ge f_f$$

Tension flange:

Tension flange flexural stresses due to the unfactored loads:

$f_{DC1tf} := \frac{MDC1p_E}{ES_{bot}}$ $\quad f_{DC1tf} = 136.6246 \cdot MPa$

$f_{DC2tf} := \frac{MDC2p_E}{ES2_{bot}}$ $\quad f_{DC2tf} = 11.1103 \cdot MPa$

$f_{DWtf} := \frac{MDWp_E}{ES2_{bot}}$ $\quad f_{DWtf} = 12.2791 \cdot MPa$

$f_{LLtf} := \frac{MLLp_E}{ES1_{bot}}$ $\quad f_{LLtf} = 128.5244 \cdot MPa$

$f_{tf} := \gamma 2_{DC} \cdot f_{DC1tf} + \gamma 2_{DC} \cdot f_{DC2tf} + \gamma 2_{DW} \cdot f_{DWtf} + \gamma 2_{LL} \cdot f_{LLtf}$ $\quad f_{tf} = 327.0956 \cdot MPa$

$R_b := 1$ $\quad R_h = 1$

$$f_{tf} = 327.0956 \cdot MPa < 0.95 \cdot F_y \cdot R_b \cdot R_h = 327.75 \cdot MPa$$

Tension flange satisfies the service II limit state

$DIFFRENCE := 0.95 \cdot F_y \cdot R_b \cdot R_h - f_{tf}$ $\qquad DIFFRENCE = 0.6544 \cdot MPa$

$\%DIFFRENCE := \frac{DIFFRENCE \cdot 100}{0.95 \cdot F_y \cdot R_b \cdot R_h}$ $\qquad \%DIFFRENCE = 0.1997 \quad \%$

Compression flange:

Compression flange flexural stresses due to the unfactored loads:

$f_{DC1cf} := \frac{MDC1p_E}{ES_{top}}$ $\qquad f_{DC1cf} = 160.9998 \cdot MPa$

$f_{DC2cf} := \frac{MDC2p_E}{ES2_{top}}$ $\qquad f_{DC2cf} = 5.8248 \cdot MPa$

$f_{DWcf} := \frac{MDWp_E}{ES2_{top}}$ $\qquad f_{DWcf} = 6.4376 \cdot MPa$

$f_{LLcf} := \frac{MLLp_E}{ES1_{top}}$ $\qquad f_{LLcf} = 27.7141 \cdot MPa$

$f_{cf} := \gamma 2_{DC} \cdot f_{DC1cf} + \gamma 2_{DC} \cdot f_{DC2cf} + \gamma 2_{DW} \cdot f_{DWcf} + \gamma 2_{LL} \cdot f_{LLcf}$ $\qquad f_{cf} = 209.2905 \cdot MPa$

$R_b := 1$ $\qquad R_h = 1$

$f_{cf} = 209.2905 \cdot MPa < 0.95 \cdot F_y \cdot R_b \cdot R_h = 327.75 \cdot MPa$

Compression flange satisfies the service II limit state

THREE-SPAN, CONTINUOUS PLATE GIRDER BRIDGE
DESIGN OF THE NEGATIVE FLEXURE SECTION

1. CONSTANTS AND UNITS:

Acceleration of gravity constant $g = 9.8066 \cdot m \cdot sec^{-2}$

$ft := 12 \cdot in$

$in := 25.4 \cdot mm$ $\quad ft = 0.3048 \cdot m$

$lbm := 0.4536 \cdot kg$

$lb := 0.4536 \cdot kg \cdot g$ $\quad lb = 4.4483 \cdot newton$

$kN := 1000 \cdot newton$ $\quad kPa := 1000 \cdot Pa$ $\quad MPa := 1000000 \cdot Pa$

$\frac{lb}{in^2} = 6894.8733 \cdot Pa$ $\quad \frac{lb}{in^2} = 6.8949 \cdot kPa$

2. GIVEN REQUIREMENTS:

Number of girders:	$N_g := 4$	
Number of spans:	$N_{sp} := 3$	
Length of middle span:	$L_2 := 100.0 \cdot m$	
Length of side span (equal length):	$L_1 := 65.0 \cdot m$	$L_3 := 65 \cdot m$
Girder spacing:	$GS := 3.7 \cdot m$	
Roadway width:	$RW := 12.6 \cdot m$	
Concrete deck thickness (structural):	$T_c := 0.23 \cdot m$	
Concrete deck overhang:	$OH_c := 1.15 \cdot m$	
Sidewalk:	NONE	
Average Daily Truck Traffic (ADTT):	$ADTT := 2500$	
Haunch thickness:	$tn_h := 36.2 \cdot mm$	

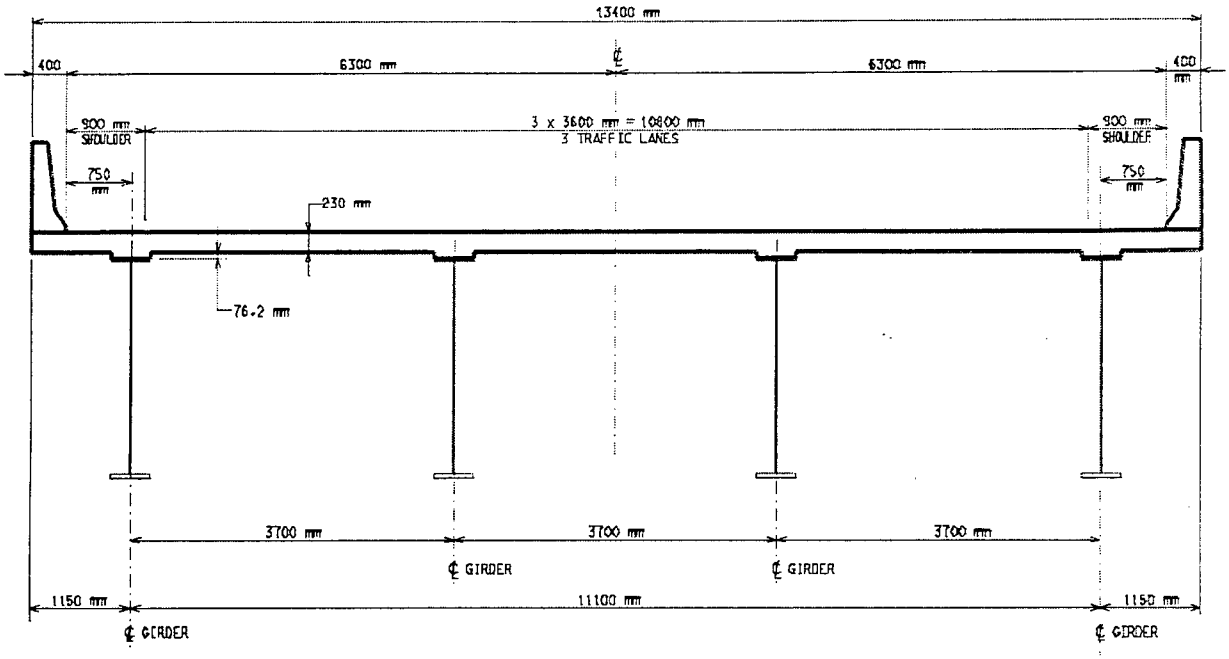

TYPICAL BRIDGE CROSS-SECTION

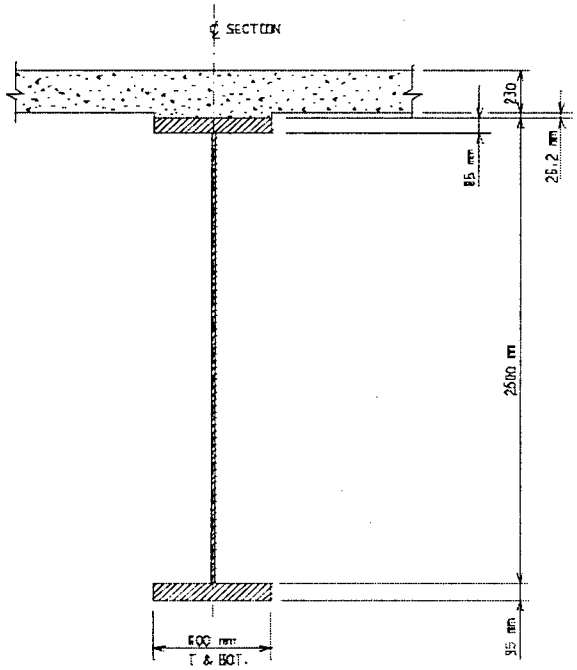

PRELIMINARY GIRDER SECTION

3. MATERIALS:

Structural steel: AASHTO M270, Grade 345 (ASTM A709M, Grade 345):

$F_y := 345 \cdot MPa$ $\quad \gamma_s := 7850 \cdot \frac{kg}{m^3}$ $\quad \gamma_s \cdot g = 76.9822 \cdot \frac{kN}{m^3}$ $\quad E_s := 200000 \cdot MPa$

Slab reinforcing steel: AASHTO ?, Grade ? (ASTM ?, Grade ?):

$f_y := 420 \cdot MPa$

Concrete: standard normal-weight, with weight density γ_c:

$f_c := 28 \cdot MPa$ $\quad \gamma_c := 2400 \cdot \frac{kg}{m^3}$ $\quad \gamma_c \cdot g = 23.536 \cdot \frac{kN}{m^3}$

$E_c := 4800 \cdot \sqrt{f_c} \cdot \sqrt{MPa}$ $\quad E_c = 25399 \cdot MPa$

Stay-in-place forms surface area density (closed-section, metal, including fill-in concrete):

$\gamma_{sip} := \frac{20 \cdot \frac{lb}{ft^2}}{g}$ $\quad \gamma_{sip} = 97.6502 \cdot \frac{kg}{m^2}$

Future wearing surface, with surface area density γ_a:

$\gamma_{ws} := \frac{1.0 \cdot \frac{kN}{m^2}}{g}$ $\quad \gamma_{ws} = 101.9716 \cdot kg \cdot m^{-2}$

Barrier: Jersey with bottom width b_{barr} = 400 [mm] and with mass per unit length of each barrier m_{barr} :

$m_{barr} := \frac{5.7 \cdot \frac{kN}{m}}{g}$ $\quad m_{barr} = 581.2382 \cdot kg \cdot m^{-1}$ $\quad b_{barr} := 0.4 \cdot m$

4. PRELIMINARY GIRDER DIMENSIONS:

a.) Top flange:

$tn_{tf} := 0.085 \cdot m$

$bn_{tf} := 0.60 \cdot m$

b.) Bottom flange:

$tn_{bf} := 0.095 \cdot m$

$bn_{bf} := 0.60 \cdot m$

c.) Web:

$tn_{w} := 0.018 \cdot m$

$hn_{w} := 2.5 \cdot m$

d.) Total section:

$An_{tf} := bn_{tf} \cdot tn_{tf}$ $\quad An_{tf} = 0.051 \cdot m^2$

$An_{bf} := bn_{bf} \cdot tn_{bf}$ $\quad An_{bf} = 0.057 \cdot m^2$

$An_{w} := tn_{w} \cdot hn_{w}$ $\quad An_{w} = 0.045 \cdot m^2$

$An_{sec} := An_{tf} + An_{bf} + An_{w}$ $\quad An_{sec} = 0.153 \cdot m^2$

5. DEAD LOADING CALCULATIONS (PER GIRDER):

Non-composite dead load (DC_1):

$SLAB := T_c \cdot GS \cdot \gamma_c \cdot g$ $\quad SLAB = 20.0291 \cdot \frac{kN}{m}$

$HAUNCH := bn_{tf} \cdot tn_h \cdot \gamma_c \cdot g$ $\quad HAUNCH = 0.5112 \cdot \frac{kN}{m}$

$SIP := (GS - bn_{tf}) \cdot \gamma_{sip} \cdot g$ $\quad SIP = 2.9686 \cdot \frac{kN}{m}$

$GIRDER_{prel} := An_{sec} \cdot \gamma_s \cdot g$ $\quad GIRDER_{prel} = 11.7783 \cdot \frac{kN}{m}$

$DC_1 := SLAB + HAUNCH + SIP + GIRDER_{prel}$ $\quad DC_1 = 35.2872 \cdot \frac{kN}{m}$

Long-term composite dead load (DC_2):

$BARRIER := \frac{m_{barr} \cdot g \cdot 2}{4}$ (equally distributed to each girde)

$BARRIER = 2.85 \cdot \frac{kN}{m}$ $\quad DC_2 := BARRIER$

$DC_2 = 2.85 \cdot \frac{kN}{m}$

Total DC:

$DC := DC_1 + DC_2$ $\quad DC = 38.1372 \cdot \frac{kN}{m}$

Long-term composite dead load (DW):

$$FWS := \frac{\gamma_{ws} \cdot g \cdot RW}{4}$$ (equally distributed to each girder)

$$FWS = 3.15 \cdot \frac{kN}{m}$$ $$DW := FWS$$

$$DW = 3.15 \cdot \frac{kN}{m}$$

Summary of dead loading calculations:

$$DC_1 = 35.2872 \cdot \frac{kN}{m} \qquad DC_2 = 2.85 \cdot \frac{kN}{m} \qquad DW = 3.15 \cdot \frac{kN}{m}$$

The overhang span of 1150 [mm] is less than one half the girder spacing distance ($\frac{GS}{2} = 1850$) ; therefore, the exterior girder would not control.

6. SECTION PROPERTIES - MAXIMUM NEGATIVE MOMENT:

Dimensions of the preliminary girder section were changed to the following:

Non-composite section properties (n = ∞):

a.) Top flange:

$tn_{tf} := 90 \cdot mm$

$bn_{tf} := 600 \cdot mm$

$An_{tf} := bn_{tf} \cdot tn_{tf}$

$An_{tf} = 54000 \cdot mm^2$

$tn_h := (53 \cdot mm + 76.2 \cdot mm) - tn_{tf}$

b.) Bottom flange:

$tn_{bf} := 90 \cdot mm$

$bn_{bf} := 600 \cdot mm$

$An_{bf} := bn_{bf} \cdot tn_{bf}$

$An_{bf} = 54000 \cdot mm^2$

$tn_h = 39.2 \cdot mm$

c.) Web:

$tn_w := 18 \cdot mm$

$hn_w := 2500 \cdot mm$

$An_w := tn_w \cdot hn_w$

$An_w = 45000 \cdot mm^2$

Distance from x axis (bottom of the whole section) to the item center of gravity - y1n

$y1n_{tf} := tn_{bf} + hn_w + 0.5 \cdot tn_{tf}$

$y1n_{tf} = 2635 \cdot mm$

$y1n_{bf} := 0.5 \cdot tn_{bf}$

$y1n_{bf} = 45 \cdot mm$

$y1n_w := tn_{bf} + 0.5 \cdot hn_w$

$y1n_w = 1340 \cdot mm$

$In_{0tf} := \frac{bn_{tf} \cdot tn_{tf}^3}{12}$

$In_{0tf} = 36450000 \cdot mm^4$

$In_{0bf} := \frac{bn_{bf} \cdot tn_{bf}^3}{12}$

$In_{0bf} = 36450000 \cdot mm^4$

$In_{0w} := \frac{tn_w \cdot hn_w^3}{12}$

$In_{0w} = 2.3438 \cdot 10^{10} \cdot mm^4$

$\Sigma An_s := An_{tf} + An_{bf} + An_w$

$\Sigma An_s = 153000 \cdot mm^2$

$\Sigma Ay1n := An_{tf} \cdot y1n_{tf} + An_{bf} \cdot y1n_{bf} + An_w \cdot y1n_w$

$\Sigma Ay1n = 205020000 \cdot mm^3$

$\Sigma In_0 := In_{0tf} + In_{0bf} + In_{0w}$

$\Sigma In_0 = 2.351 \cdot 10^{10} \cdot mm^4$

Distance from bottom of section to the neutral axis (N.A.) of whole section - Yn_{sb}

$Yn_{sb} := \frac{\Sigma Ay1n}{\Sigma An_s}$

$Yn_{sb} = 1340 \cdot mm$

Distance from top of steel to the neutral axis (N.A.) of whole section - Yn_{st}

$Yn_{st} := (tn_{tf} + hn_w + tn_{bf}) - Yn_{sb}$

$Yn_{st} = 1340 \cdot mm$

Distance between item center of gravity and N.A. of whole section - y2n

$y2n_w := y1n_w - Yn_{sb}$

$y2n_w = 0 \cdot mm$

$y2n_{bf} := Yn_{sb} - y1n_{bf}$

$y2n_{bf} = 1295 \cdot mm$

$y2n_{tf} := (tn_{bf} + hn_w + 0.5 \cdot tn_{tf}) - Yn_{sb}$

$y2n_{tf} = 1295 \cdot mm$

Moment of inertia of whole steel section in respect to N.A. of whole section - In_s

$In_s := \Sigma In_0 + An_{tf} \cdot y2n_{tf}^2 + An_{bf} \cdot y2n_{bf}^2 + An_w \cdot y2n_w^2$ $\quad In_s = 2.0463 \cdot 10^{11} \cdot mm^4$

Section modulus of steel section:

$Sn_{top} := \frac{In_s}{Yn_{st}}$ $\quad Sn_{bot} := \frac{In_s}{Yn_{sb}}$

$Sn_{top} = 1.5271 \cdot 10^8 \cdot mm^3$ $\quad Sn_{bot} = 1.5271 \cdot 10^8 \cdot mm^3$

<u>Composite section properties (steel + long reinforcement):</u>

$bn_{eff} := 3060 \cdot mm$ $\quad A_{rb} := T_c \cdot bn_{eff} \cdot 0.0033$ $\quad A_{rt} := T_c \cdot bn_{eff} \cdot 0.0067$

$DIA_{16} := 15.9 \cdot mm$ $\quad A_{rb} = 2322.54 \cdot mm^2$ $\quad A_{rt} = 4715.46 \cdot mm^2$

$A_r := A_{rb} + A_{rt}$ $\quad y_{bb} := 25 \cdot mm + 0.5 \cdot DIA_{16}$ $\quad y_{bt} := T_c - 50 \cdot mm - 0.5 \cdot DIA_{16}$

$A_r = 7038 \cdot mm^2$ $\quad y_{bb} = 32.95 \cdot mm$ $\quad y_{bt} = 172.05 \cdot mm$

Distance from the bottom of the slab to center of gravity of both reinforcement layers - yc_r

$yc_r := \frac{A_{rb} \cdot y_{bb} + A_{rt} \cdot y_{bt}}{A_{rb} + A_{rt}}$ $\quad yc_r = 126.147 \cdot mm$

Assumed reinforcement consists #16 bars (less than #20 bars) placed within two layers uniformly distributed across the slab with two-thirds placed at the top layer. The centroid of both reinforcement layers (y_{bt}) is located $yc_r = 126.1$ from the bottom of the slab (bottom clearance CL_b = 25[mm], top clearance CL_t = 50 [mm], #16 bar diameter $DIA_{\#16}$ = 15.9 [mm].

Distance from x axis (bottom of section) to reinforcement center of gravity - y1n

$y1n_r := tn_{bf} + hn_w + tn_{tf} + tn_h + yc_r$ $\quad y1n_r = 2845.347 \cdot mm$

Total section area - ΣAn_{sr}

$\Sigma An_{sr} := \Sigma An_s + A_r$ $\quad \Sigma An_{sr} = 160038 \cdot mm^2$

Distance from bottom of steel to the neutral axis (N.A.) of composite section - Yn_{sb}

$\Sigma Ay1n_{sr} := \Sigma Ay1n + A_r \cdot y1n_r$ $\quad Yn_{sbr} := \frac{\Sigma Ay1n_{sr}}{\Sigma An_{sr}}$

$\Sigma Ay1n_{sr} = 225045552.186 \cdot mm^3$ $\quad Yn_{sbr} = 1406.2007 \cdot mm$

Distance from top of steel to the neutral axis (N.A.) of composite section - Yn_{st}

$Yn_{str} := (tn_{tf} + hn_w + tn_{bf}) - Yn_{sbr}$ $\quad Yn_{str} = 1273.7993 \cdot mm$

Distance between reinforcement center of gravity and N.A. of composite section - y2n

$y2n_r := (tn_{bf} + hn_w + tn_{tf} + tn_h + yc_r) - Yn_{sbr}$ $\quad y2n_r = 1439.1463 \cdot mm$

Composite section moment of inertia in respect to N.A. of composite section - In_s

$In_{sr} := \Sigma In_0 + An_{tf} \cdot y2n_{tf}^2 + An_{bf} \cdot y2n_{bf}^2 + An_w \cdot y2n_w^2 + A_r \cdot y2n_r^2$ $\quad In_{sr} = 2.1921 \cdot 10^{11} \cdot mm^4$

$Sn_{top} = 1.5271 \cdot 10^8 \cdot mm^3$ $\quad Sn_{bot} = 1.5271 \cdot 10^8 \cdot mm^3$

Section modulus of composite section at the extreme fibers:

$Sn_{topr} := \frac{In_{sr}}{Yn_{st}}$ $\quad Sn_{botr} := \frac{In_{sr}}{Yn_{sbr}}$

$Sn_{topr} = 1.6359 \cdot 10^8 \cdot mm^3$ $\quad Sn_{botr} = 1.5589 \cdot 10^8 \cdot mm^3$

<u>Short-term composite section properties (n):</u>

$f_c = 28 \cdot MPa$ $\quad E_c = 25399 \cdot MPa$ $\quad E_s = 200000 \cdot MPa$

Modular ratio: $n := \frac{E_s}{E_c}$ $\quad n = 7.8743$

Haunch thickness (top flange of steel not included): tn_h

$tn_h = 39.2 \cdot mm$

Effective flange width b_{eff}:

$bn_{tf} = 600 \cdot mm$ $\quad L_2 = 100000 \cdot mm$ $\quad T_c = 230 \cdot mm$ $\quad GS = 3700 \cdot mm$

$$pn := \begin{cases} \frac{bn_{tf}}{2} & \text{if } \frac{bn_{tf}}{2} > tn_w \\ tn_w & \text{otherwise} \end{cases} \qquad bn_{eff} := \begin{cases} \frac{L_2}{4} & \text{if } \frac{L_2}{4} < 12 \cdot T_c + pn \\ 12 \cdot T_c + pn & \text{otherwise} \end{cases}$$

$pn = 300 \cdot mm$

$$bn_{eff} := \begin{cases} bn_{eff} & \text{if } bn_{eff} < GS \\ GS & \text{otherwise} \end{cases}$$

$bn_{eff} = 3060 \cdot mm$

a.) Concrete slab n = 9:

$bn_{1c} := \frac{bn_{eff}}{n}$ $\quad bn_{1c} = 388.608 \cdot mm$

$An_{1c} := T_c \cdot bn_{1c}$ $\quad An_{1c} = 8.938 \cdot 10^4 \cdot mm^2$

b.) Steel girder:

$\Sigma An_s = 153000 \cdot mm^2$

$In_s = 2.0463 \cdot 10^{11} \cdot mm^4$

$Yn_{sb} = 1340 \cdot mm$

Distance from x axis (bottom of section) to the concrete slab center of gravity - Yn_1

$Yn_{1c} := tn_{bf} + hn_w + tn_{tf} + tn_h + 0.5 \cdot T_c$ $\quad Yn_{1c} = 2834.2 \cdot mm$

$In_{1c} := \frac{bn_{1c} \cdot T_c^3}{12}$ $\quad In_{1c} = 394016079.9091 \cdot mm^4$

$\Sigma An_1 := An_{1c} + \Sigma An_s$ $\quad \Sigma An_1 = 242379.8291 \cdot mm^2$

$\Sigma In_1 := In_s + In_{1c}$ $\quad \Sigma In_1 = 2.0502 \cdot 10^{11} \cdot mm^4$

$\Sigma AnY1n := An_{1c} \cdot Yn_{1c} + \Sigma An_s \cdot Yn_{sb}$ $\quad \Sigma AnY1n = 458340311.6095 \cdot mm^3$

Distance from x axis (bottom of section) to the neutral axis (N.A.) of composite section - $Y1n_b$

$Y1n_b := \frac{\Sigma AnY1n}{\Sigma An_1}$ $\quad Y1n_b = 1.891 \cdot 10^3 \cdot mm$

Distance from top of steel to the neutral axis (N.A.) of composite section - $Y1n_t$

$Y1n_t := (tn_{tf} + hn_w + tn_{bf}) - Y1n_b$ $\quad Y1n_t = 788.9998 \cdot mm$

Distance between item center of gravity and N.A. of composite section - y3n

steel:

$y3n_s := Y1n_b - Yn_{sb}$

$y3n_s = 551.0002 \cdot mm$

concrete:

$y3n_c := Y1n_t + \frac{T_c}{2} + tn_h$

$y3n_c = 943.1998 \cdot mm$

Composite section moment of inertia in respect to N.A. of composite section - In_{1n}

$In_{1n} := \Sigma In_1 + \Sigma An_s \cdot y3n_s^2 + An_{1c} \cdot y3n_c^2$ $\quad In_{1n} = 3.3099 \cdot 10^{11} \cdot mm^4$

Section modulus of composite steel section:

$S1n_{top} := \frac{In_{1n}}{Y1n_t}$ $\qquad$ $S1n_{bot} := \frac{In_{1n}}{Y1n_b}$

$S1n_{top} = 419504189.1124 \cdot mm^3$ $\qquad$ $S1n_{bot} = 175033670.4354 \cdot mm^3$

<u>Long-term composite section properties (3n):</u>

a.) Concrete slab - $3 \cdot n = 23.$

$bn_{2c} := \frac{bn_{eff}}{3 \cdot n}$ $\qquad$ $bn_{2c} = 129.536 \cdot mm$

$An_{2c} := T_c \cdot bn_{2c}$ $\qquad$ $An_{2c} = 2.9793 \cdot 10^4 \cdot mm^2$

b.) Steel girder:

$\Sigma An_s = 153000 \cdot mm^2$

$In_s = 2.0463 \cdot 10^{11} \cdot mm^4$

$Yn_{sb} = 1340 \cdot mm$

Distance from x axis (bottom of section) to the item center of gravity - Yn_2

$Yn_{2c} := Yn_{1c}$ $\qquad$ $Yn_{2c} = 2834.2 \cdot mm$

$In_{2c} := \frac{bn_{2c} \cdot T_c^3}{12}$ $\qquad$ $\Sigma An_2 := An_{2c} + \Sigma An_s$ $\qquad$ $\Sigma In_2 := In_s + In_{2c}$

$In_{2c} = 131338693.303 \cdot mm^4$ $\qquad$ $\Sigma An_2 = 182793.2764 \cdot mm^2$ $\qquad$ $\Sigma In_2 = 2.0476 \cdot 10^{11} \cdot mm^4$

$\Sigma AnY2n := An_{2c} \cdot Yn_{2c} + \Sigma An_s \cdot Yn_{sb}$ $\qquad$ $\Sigma AnY2n = 289460.1039 \cdot m \cdot mm^2$

Distance from x axis (bottom of section) to the neutral axis (N.A.) of composite section - $Y2n_b$

$Y2n_b := \frac{\Sigma AnY2n}{\Sigma An_2}$ $\qquad$ $Y2n_b = 1.5835 \cdot 10^3 \cdot mm$

Distance from top of steel to the neutral axis (N.A.) of composite section - $Y2n_t$

$Y2n_t := (tn_{tf} + hn_w + tn_{bf}) - Y2n_b$ $\qquad$ $Y2n_t = 1096.462 \cdot mm$

Distance between item center of gravity and N.A. of composite section - y4

steel: $\qquad$ concrete:

$y4n_s := Y2n_b - Yn_{sb}$ $\qquad$ $y4n_c := Y2n_t + \frac{T_c}{2} + tn_h$

$y4n_s = 243.538 \cdot mm$ $\qquad$ $y4n_c = 1250.662 \cdot mm$

Composite section moment of inertia in respect to N.A. of composite section - In_{2n}

$In_{2n} := \Sigma In_2 + \Sigma An_s \cdot y4n_s^2 + An_{2c} \cdot y4n_c^2$ $\qquad$ $In_{2n} = 2.6044 \cdot 10^{11} \cdot mm^4$

Section modulus of composite steel section:

$S2n_{top} := \frac{In_{2n}}{Y2n_t}$ $\qquad$ $S2n_{bot} := \frac{In_{2n}}{Y2n_b}$

$S2n_{top} = 237524242.3462 \cdot mm^3$ $\qquad$ $S2n_{bot} = 164464822.2446 \cdot mm^3$

7. LOAD FACTORS :

Load modification factor for strength limit states - η1.

Ductility factor: $\eta 1_D := 1.0$

Redundancy factor: $\eta 1_R := 1.0$

Operational importance factor: $\eta 1_I := 1.0$

Load modification factor: $\eta 1 := \eta 1_D \cdot \eta 1_R \cdot \eta 1_I$ $\qquad$ $\eta 1 = 1$

Load modification factor for all other limit states except extreme event limit state - η2.

Ductility factor: $\eta 2_D := 1.0$

Redundancy factor: $\eta 2_R := 1.0$

Operational importance factor: $\eta 2_I := 1.0$

Load modification factor: $\eta 2 := \eta 2_D \cdot \eta 2_R \cdot \eta 2_I$ $\qquad$ $\eta 2 = 1$

Load modification factor for extreme event limit state - η3.

Ductility factor: $\eta 3_D := 1.0$

Redundancy factor: $\eta 3_R := 1.0$

Operational importance factor: $\eta 3_I := 1.0$

Load modification factor: $\eta 3 := \eta 3_D \cdot \eta 3_R \cdot \eta 3_I$ $\qquad$ $\eta 3 = 1$

Load factors - γ.

Strength I :	$\gamma 1_{DC} := 1.25$	$\gamma 1_{DW} := 1.50$	$\gamma 1_{LL} := 1.75$
Service II :	$\gamma 2_{DC} := 1.0$	$\gamma 2_{DW} := 1.0$	$\gamma 2_{LL} := 1.30$
Fatigue :			$\gamma 3_{LL} := 0.75$

Multiple presence factors - m.

One lane loaded:	$m_1 := 1.2$
Two lanes loaded:	$m_2 := 1.0$
Three lanes loaded:	$m_3 := 0.85$
four and more lanes loaded:	$m_4 := 0.65$

8. LIVE LOADING CALCULATIONS (PER GIRDER):

Live loads are assumed to be carried in full by the short-term composite section and distributed to the individual girders according to the approximate methods (AASHTO A4.6.2.2.).

Conditions for approximate methods application.

a.) Width of the deck is constant.

b.) Number of beams is not less than four unless otherwise specified.

c.) Beams are parallel and have approximately the same stiffness.

d.) The roadway part of the overhang (d_e) does not exceed 910 [mm], unless otherwise specified.

e.) The cross-section is consistent with one of the cross-sections shown in Table 4.6.2.2.1-1.

Conditions specified above are met, thus permanent loads of and on the the deck may be uniformly distributed among the beams and/or stringers.

$$L := \frac{L_1 + L_2}{2} \qquad L = 82.5 \cdot m$$

f.)	$1100 \cdot mm$	<	$GS := 3700 \cdot mm$	<	$4900 \cdot mm$	**O.K.**
g.)	$110 \cdot mm$	<	$T_c := 230 \cdot mm$	<	$300 \cdot mm$	**O.K.**
h.)	$6000 \cdot mm$	<	$L = 82500 \cdot mm$	<	$73000 \cdot mm$	**N.G.**
i.)	$6000 \cdot mm$	<	$L_1 := 65000 \cdot mm$	<	$73000 \cdot mm$	**O.K.**

7.2. Live load lateral distribution factors - positive flexure.

The average of the adjacent span lengths (L_1 and L_2) is used to compute containing K_g term distribution factor to be used in all regions of negative flexure.

Moment distribution to interior girder:

$L = 82.5 \cdot m$ $\quad S := 3.7 \cdot m$ $\quad hn_w = 2500 \cdot mm$ $\quad In_s = 2.0463 \cdot 10^{11} \cdot mm^4$

$hn_w = 2500 \cdot mm$ $\quad tn_h = 39.2 \cdot mm$ $\quad tn_{tf} = 90 \cdot mm$ $\quad \Sigma An_s = 153000 \cdot mm^2$

$tn_{bf} = 90 \cdot mm$ $\quad T_c := 230 \cdot mm$ $\quad Yn_{sb} = 1340 \cdot mm$

Distance between centers of gravity between of the basic beam and deck (e_g):

$$en_g := \frac{T_c}{2} + tn_h + tn_{tf} + hn_w + tn_{bf} - Yn_{sb} \qquad en_g = 1494.2 \cdot mm$$

Longitudinal stiffness parameter: $Kn_g := n \cdot \left(In_s + \Sigma An_s \cdot en_g^2\right)$ $\qquad Kn_g = 4.3011 \cdot 10^{12} \cdot mm^4$

One design lane loaded:

$$DFMI1_1 := 0.06 + \left(\frac{S}{4300 \cdot mm}\right)^{0.4} \cdot \left(\frac{S}{L}\right)^{0.3} \cdot \left(\frac{Kn_g}{L \cdot T_c^3}\right)^{0.1}$$

$$DFMI1_1 = 0.4892$$

Two or more design lane loaded:

$$DFMI1_2 := 0.075 + \left(\frac{S}{2900 \cdot mm}\right)^{0.6} \cdot \left(\frac{S}{L}\right)^{0.2} \cdot \left(\frac{Kn_g}{L \cdot T_c^3}\right)^{0.1}$$

$$DFMI1_2 = 0.7945$$

$$DFM1_{int} := \begin{cases} DFMI1_1 & \text{if } DFMI1_1 > DFMI1_2 \\ DFMI1_2 & \text{otherwise} \end{cases}$$

$$DFM1_{int} = 0.7945$$

All other distribution factors for regions in negative flexure for the interior girder and for the exterior girder are independent of the span length and the stiffness of the girder; therefore, they are identical to the values calculated for regions in positive flexure.

Shear distribution to interior girder: $\qquad DFV1_{int} := 1.1082$

Moment distribution to exterior girder: $\qquad DFM1_{ext} := 0.9865$

Shear distribution to exterior girder: $\qquad DFV1_{ext} := 0.9865$

Summary of live load distribution factors for negative flexure regions.

Moment:

Negative flexure strength / service limit states distribution factors: $DFM1_{int} = 0.7945$ (interior girder)

$DFM1_{ext} = 0.9865$ (exterior girder)

$$Test_1 := \begin{cases} 1 & \text{if } DFM1_{ext} < DFM1_{int} \\ 0 & \text{otherwise} \end{cases}$$

$Test_1 = 0$

Test = 1 : O.K. - interior load distribution factors govern.

Test = 0 : N.G. - exterior load distribution factors govern and exterior girder would have to be design separetly.

Shear:

Negative flexure strength / service limit states distribution factors: $DFV1_{int} = 1.1082$ (interior girder)

$DFV1_{ext} = 0.9865$ (exterior girder)

$$Test_2 := \begin{cases} 1 & \text{if } DFV1_{ext} < DFV1_{int} \\ 0 & \text{otherwise} \end{cases}$$

$Test_2 = 1$

Test = 1 : O.K. - interior load distribution factors govern.

Test = 0 : N.G. - exterior load distribution factors govern and exterior girder would have to be design separetly.

9. LOAD COMBINATIONS.

Span 1 strength / service limit states distribution factor: $DFM1_{int} = 0.7945$

Moments (from Qcon):

DC=DC$_1$ +DC$_2$ maximum negative moment (interior support): $MDCn_{max} := 24736 \cdot kN \cdot m$

DC$_1$ maximum negative moment (interior support): $MDC1n_{max} := 22624 \cdot kN \cdot m$

DC$_2$ maximum negative moment (interior support): $MDC2n_{max} := 2112 \cdot kN \cdot m$

DW maximum positive moment (interior support): $MDWn_{max} := 2334 \cdot kN \cdot m$

LL + Impact maximum negative moment (span 1 - interior support): $MLLn_{max} := 13446 \cdot kN \cdot m$
LL = (Dual Truck Train x Impact) + Lane
Impact = 1.33

STRENGTH I.

Maximum negative moment for Strength I Limit State:

$$\eta 1 \Sigma \gamma i MSTn_{max} := \gamma 1_{DC} \cdot MDCn_{max} + \gamma 1_{DW} \cdot MDWn_{max} + \gamma 1_{LL} \cdot DFM1_{int} \cdot MLLn_{max}$$

$$\eta 1 \Sigma \gamma i MSTn_{max} = 53115.7929 \cdot kN \cdot m$$

SERVICE II :

Maximum negative moment for Service II Limit State:

$$\eta 1 \Sigma \gamma i MSEn_{max} := \gamma 2_{DC} \cdot MDCn_{max} + \gamma 2_{DW} \cdot MDWn_{max} + \gamma 2_{LL} \cdot DFM1_{int} \cdot MLLn_{max}$$

$$\eta 1 \Sigma \gamma i MSEn_{max} = 40957.5605 \cdot kN \cdot m$$

10. STRENGTH LIMIT STATE - MAXIMUM NEGATIVE MOMENT (INTERIOR SUPPORT).

Location of the plastic neutral axis (PNA).

$\Sigma An_s = 153000 \cdot mm^2$ $\quad bn_{eff} = 3060 \cdot mm$ $\quad T_c = 230 \cdot mm$ $\quad tn_h = 39.2 \cdot mm$

$F_y = 345 \cdot MPa$ $\quad f_c = 28 \cdot MPa$ $\quad f_y = 420 \cdot MPa$

a.) Top flange:

$tn_{tf} = 90 \cdot mm$

$bn_{tf} = 600 \cdot mm$

b.) Bottom flange:

$tn_{bf} = 90 \cdot mm$

$bn_{bf} = 600 \cdot mm$

c.) Web:

$tn_w = 18 \cdot mm$

$hn_w = 2500 \cdot mm$

Plastic forces:

Reinforcement (assuming deck reinforcement area = 1% of deck area)

Top reinforcement: $P_{rt} := f_y \cdot bn_{eff} \cdot T_c \cdot 0.0067$ $\quad P_{rt} = 1980.4932 \cdot kN$

Bottom reinforcement: $P_{rb} := f_y \cdot bn_{eff} \cdot T_c \cdot 0.0033$ $\quad P_{rb} = 975.4668 \cdot kN$

Tension flange: $Pn_t := F_y \cdot bn_{tf} \cdot tn_{tf}$ $\quad Pn_t = 18630 \cdot kN$

Web: $Pn_w := F_y \cdot hn_w \cdot tn_w$ $\quad Pn_w = 15525 \cdot kN$

Compression flange: $Pn_c := F_y \cdot bn_{bf} \cdot tn_{bf}$ $\quad Pn_c = 18630 \cdot kN$

$Pn_w + Pn_c = 34155 \cdot kN$ $\qquad Pn_t + P_{rt} + P_{rb} = 21586 \cdot kN$

$Pn_w + Pn_c \geq Pn_t + P_{rt} + P_{rb}$ $\qquad$ PNA in web

Calculation of distance Yn_{PNA} from bottom of top tension flange to PNA:

$$Yn_{PNA} := \begin{cases} \left[\frac{hn_w}{2} \cdot \left(\frac{Pn_c - Pn_t - P_{rt} - P_{rb}}{Pn_w} + 1\right)\right] & \text{if } Pn_c + Pn_w \geq Pn_t + P_{rb} + P_{rt} \quad \text{PNA in web} \\ \left[\frac{tn_{tf}}{2} \cdot \left(\frac{Pn_w + Pn_c - P_{rt} - P_{rb}}{Pn_t} + 1\right)\right] & \text{otherwise} \quad \text{PNA in top flange} \end{cases}$$

PNA in web: $\quad Yn_{PNA} = 1012 \cdot mm$

Calculation of plastic moment capacity (Mn_p).

$tn_h = 0.0392 \cdot m$ $CL_{rt} := 50 \cdot mm$ $CL_{rb} := 25 \cdot mm$ $DIA_{rt} := 15.9 \cdot mm$ $DIA_{rb} := 15.9 \cdot mm$

Distance from P_{rt} to PNA: $dn_{rt} := T_c - \left(CL_{rt} + \frac{DIA_{rt}}{2}\right) + tn_h + tn_{tf} + Yn_{PNA}$ $dn_{rt} = 1313.3 \cdot mm$

Distance from P_{rb} to PNA: $dn_{rb} := CL_{rb} + \frac{DIA_{rb}}{2} + tn_h + Yn_{PNA}$ $dn_{rb} = 1084.1 \cdot mm$

Distance from P_t to PNA: $dn_t := \frac{tn_{tf}}{2} + Yn_{PNA}$ $dn_t = 1057 \cdot mm$

Distance from P_w to PNA: $dn_w := Yn_{PNA} - \frac{hn_w}{2}$ $dn_w = -238 \cdot mm$

Distance from P_c to PNA: $dn_c := \left(hn_w + \frac{tn_{bf}}{2}\right) - Yn_{PNA}$ $dn_c = 1533 \cdot mm$

$$Mn_p := \frac{Pn_w}{2 \cdot hn_w} \cdot \left[Yn_{PNA}^2 + \left(hn_w - Yn_{PNA}\right)^2\right] + \left(Pn_c \cdot dn_c + P_{rt} \cdot dn_{rt} + P_{rb} \cdot dn_{rb} + Pn_t \cdot dn_t\right)$$

$Mn_p = 61965.0193 \cdot kN \cdot m$

Check if the section qualifies as a compact section.

Web slenderness requirement for compact section: $\frac{2 \cdot Dn_{cp}}{tn_w} \le 3.76 \cdot \sqrt{\frac{E_s}{F_y}}$

Depth of the web in compression at the plastic moment - Dn_{cp}

Depth of web in compression at the plastic moment for the section in negative flexure with PNA in the web:

$$Dn_{cp} := \frac{hn_w}{2 \cdot hn_w \cdot tn_w \cdot F_y} \cdot \left(F_y \cdot tn_{tf} \cdot bn_{tf} + F_y \cdot hn_w \cdot tn_w + f_y \cdot bn_{eff} \cdot T_c \cdot 0.01 - F_y \cdot tn_{bf} \cdot bn_{bf}\right)$$

$Dn_{cp} = 1488 \cdot mm$

$$\frac{2 \cdot Dn_{cp}}{tn_w} = 165.3333 \quad > \quad 3.76 \cdot \sqrt{\frac{E_s}{F_y}} = 90.5302$$

Requirement is not satisfied - section non-compact.

Section proportions requirement:

$$0.1 \le \frac{In_{yc}}{In_y} \le 0.9$$

Moment of interia of the steel section about the vertical axis in the plane of the web in [mm^4]:

$$In_y := \frac{tn_{bf} \cdot bn_{bf}^3}{12} + \frac{hn_w \cdot tn_w^3}{12} + \frac{tn_{tf} \cdot bn_{tf}^3}{12} \qquad In_y = 3.2412 \cdot 10^9 \cdot mm^4$$

Moment of interia of the compression flange of the steel section about the vertical axis in the plane of the web in [mm^4]:

$$In_{yc} := \frac{tn_{tf} \cdot bn_{tf}^3}{12} \qquad In_{yc} = 1.62 \cdot 10^9 \cdot mm^4$$

$$0.1 < \frac{In_{yc}}{In_y} = 0.4998 < 0.9$$

<u>Web slenderness requirement for non-compact section.</u>

$$\frac{2 \cdot Dn_c}{tn_w} \le 6.77 \cdot \sqrt{\frac{E_s}{fn_c}}$$

fn_c - stress in the compression flange due to factored loading [MPa]:

$$fn_{cDC1} := \frac{\eta 1 \cdot \gamma 1_{DC} \cdot MDC1n_{max}}{Sn_{bot}} \qquad fn_{cDC1} = 185.1897 \cdot MPa$$

$$fn_{cDC2} := \frac{\eta 1 \cdot \gamma 1_{DC} \cdot MDC2n_{max}}{Sn_{botr}} \qquad fn_{cDC2} = 16.9355 \cdot MPa$$

$$fn_{cDW} := \frac{\eta 1 \cdot \gamma 1_{DW} \cdot MDWn_{max}}{Sn_{botr}} \qquad fn_{cDW} = 22.4588 \cdot MPa$$

$$fn_{cLL} := \frac{\eta 1 \cdot \gamma 1_{LL} \cdot DFM1_{int} \cdot MLLn_{max}}{Sn_{botr}} \qquad fn_{cLL} = 119.9267 \cdot MPa$$

$$fn_c := fn_{cDC1} + fn_{cDC2} + fn_{cDW} + fn_{cLL} \qquad fn_c = 344.5108 \cdot MPa$$

Dn_c - depth of the web in compression in the elastic range: $Dn_c := Yn_{sbr} - tn_{bf}$

$$Dn_c = 1316.2007 \cdot mm$$

$$\frac{2 \cdot Dn_c}{tn_w} = 146.2445 < 6.77 \cdot \sqrt{\frac{E_s}{fn_c}} = 163.1181$$

Web slenderness requirement satisfied

Compression flange slenderness requirement for non-compact section.

$$\frac{bn_{bf}}{2 \cdot tn_{bf}} \le 1.38 \cdot \sqrt{\frac{E_s}{fn_c \cdot \sqrt{\frac{2 \cdot Dn_c}{tn_w}}}}$$

$$\frac{bn_{bf}}{2 \cdot tn_{bf}} = 3.3333 \qquad < \qquad 1.38 \cdot \sqrt{\frac{E_s}{fn_c \cdot \sqrt{\frac{2 \cdot Dn_c}{tn_w}}}} = 9.5614$$

Compression flange slenderness requirement satisfied

Compression flange bracing requirement for non-compact section.

L_b - distance between points bracing the compression flange [mm] (assumed $L_b := 6800 \cdot mm$):

$F_{yc} := F_y \qquad F_{yc} = 345 \cdot MPa$

r_t - minimum radius of gyration of the compression flange of the steel section plus one-third of the web in compression taken about the vertical axis

$bn_{bf} = 600 \cdot mm \qquad tn_{bf} = 90 \cdot mm \qquad tn_w = 18 \cdot mm \qquad Dn_c = 1316.2007 \cdot mm$

$$I_t := \frac{bn_{bf}^3 \cdot tn_{bf}}{12} + \frac{tn_w^3 \cdot \frac{Dn_c}{3}}{12} \qquad A_t := bn_{bf} \cdot tn_{bf} + tn_w \cdot \frac{Dn_c}{3} \qquad r_t := \sqrt{\frac{I_t}{A_t}}$$

$I_t = 1.6202 \cdot 10^9 \cdot mm^4 \qquad A_t = 61897.2044 \cdot mm^2 \qquad r_t = 161.7896 \cdot mm$

$$L_b \le 1.76 \cdot r_t \cdot \sqrt{\frac{E_s}{F_{yc}}}$$

$$L_b = 6800 \cdot mm \qquad < \qquad 1.76 \cdot r_t \cdot \sqrt{\frac{E_s}{F_{yc}}} = 6855.9665 \cdot mm$$

Compression flange slenderness requirement satisfied

Nominal flexural resistance.

For non-compact sections, a nominal flexural resistance is computed for each flange. Nominal flexural resistance of each flange in terms of stress Fn

Compression flange:

$R_{hc} := 1$ - flange stress-reduction factor (equal to 1 for homogenous sections)

For members with compression flange area equal or greater than the tension flange $\lambda_b = 5.76$.

For members with compression flange area less than the tension flange $\lambda_b = 4.64$.

$$\lambda_b := \begin{cases} 5.76 & \text{if } tn_{bf} \cdot bn_{bf} \geq tn_{tf} \cdot bn_{tf} \\ 4.64 & \text{otherwise} \end{cases} \qquad \lambda_b = 5.76$$

$$\frac{2 \cdot Dn_c}{tn_w} \leq \lambda_b \cdot \sqrt{\frac{E_s}{fn_c}}$$

$$\frac{2 \cdot Dn_c}{tn_w} = 146.2445 \quad < \quad \lambda_b \cdot \sqrt{\frac{E_s}{fn_c}} = 138.7829 \qquad \text{Therefore:} \qquad R_{bc} := 1$$

$$F_{nc} := R_{bc} \cdot R_{hc} \cdot F_{yc} \qquad F_{nc} = 345 \cdot MPa$$

Tension flange:

$R_{ht} := 1 \qquad R_{bt} := 1 \qquad F_{yt} := F_y \qquad F_{nt} := R_{bt} \cdot R_{ht} \cdot F_{yt} \qquad F_{nt} = 345 \cdot MPa$

Strength limit state for flexure.

Checking composite non-compacted section for the strength limit state is to compare the sum of the stresses in each flange due to the factored loads (Fu) to the factored flexural resistance of the flange expressed in terms of stress.

Compression flange:

$\eta \Sigma \gamma_i fc_i = fn_c$ - stress in the compression flange due to factored loading [MPa]:

$$\phi_f := 1 \qquad fn_c = 344.5108 \cdot MPa \qquad fn_c \leq \phi_f F_{nc}$$

$$fn_c = 344.5108 \cdot MPa \quad < \quad \phi_f F_{nc} = 345 \cdot MPa$$

Compression flange satisfies the srtength I limit state for flexure

$$DIFFRENCE := \phi_f F_{nc} - fn_c \qquad DIFFRENCE = 0.4892 \cdot MPa$$

$$\%DIFFRENCE := \frac{DIFFRENCE \cdot 100}{\phi_f F_{nc}} \qquad \%DIFFRENCE = 0.1418$$

Tension flange:

$\eta\Sigma\gamma_i ft_i = fn_t$ - stress in the tension flange due to factored loading [MPa]:

$$fn_t \le \phi_f F_{nt}$$

$$fn_{tDC1} := \frac{\eta 1 \cdot \gamma 1_{DC} \cdot MDC1n_{max}}{Sn_{top}} \qquad fn_{tDC1} = 185.1897 \cdot MPa$$

$$fn_{tDC2} := \frac{\eta 1 \cdot \gamma 1_{DC} \cdot MDC2n_{max}}{Sn_{topr}} \qquad fn_{tDC2} = 16.1383 \cdot MPa$$

$$fn_{tDW} := \frac{\eta 1 \cdot \gamma 1_{DW} \cdot MDWn_{max}}{Sn_{topr}} \qquad fn_{tDW} = 21.4015 \cdot MPa$$

$$fn_{tLL} := \frac{\eta 1 \cdot \gamma 1_{LL} \cdot DFM1_{int} \cdot MLLn_{max}}{Sn_{topr}} \qquad fn_{tLL} = 114.2808 \cdot MPa$$

$$fn_t := fn_{tDC1} + fn_{tDC2} + fn_{tDW} + fn_{tLL} \qquad fn_t = 337.0103 \cdot MPa$$

$$fn_t = 337.0103 \cdot MPa \quad < \quad \phi_f F_{nt} = 345 \cdot MPa$$

Tension flange satisfiesthe srtength I limit state for flexure

$$DIFFRENCE := \phi_f F_{nt} - fn_t \qquad DIFFRENCE = 7.9897 \cdot MPa$$

$$\%DIFFRENCE := \frac{DIFFRENCE \cdot 100}{\phi_f F_{nt}} \qquad \%DIFFRENCE = 2.3158$$

11. CHANGE OF FLANGES DIMENSIONS AT POINT K (SPAN 1 AND 3):

SECTION PROPERTIES BETWEEN INFLECTION POINT "N" AND POINT "K" LOCATED 6.2[m] FROM INTERIOR SUPPORT:

Non-composite section properties (n = ∞):

a.) Top flange:

$tn_{tf} := 55 \cdot mm$

$bn_{tf} := 600 \cdot mm$

$An_{tf} := bn_{tf} \cdot tn_{tf}$

$An_{tf} = 33000 \cdot mm^2$

$tn_h := (53 \cdot mm + 76.2 \cdot mm) - tn_{tf}$

b.) Bottom flange:

$tn_{bf} := 75 \cdot mm$

$bn_{bf} := 600 \cdot mm$

$An_{bf} := bn_{bf} \cdot tn_{bf}$

$An_{bf} = 45000 \cdot mm^2$

$tn_h = 74.2 \cdot mm$

c.) Web:

$tn_w := 18 \cdot mm$

$hn_w := 2500 \cdot mm$

$An_w := tn_w \cdot hn_w$

$An_w = 45000 \cdot mm^2$

Distance from x axis (bottom of the whole section) to the item center of gravity - y1n

$y1n_{tf} := tn_{bf} + hn_w + 0.5 \cdot tn_{tf}$

$y1n_{tf} = 2602.5 \cdot mm$

$y1n_{bf} := 0.5 \cdot tn_{bf}$

$y1n_{bf} = 37.5 \cdot mm$

$y1n_w := tn_{bf} + 0.5 \cdot hn_w$

$y1n_w = 1325 \cdot mm$

$In_{0tf} := \frac{bn_{tf} \cdot tn_{tf}^3}{12}$

$In_{0tf} = 8318750 \cdot mm^4$

$In_{0bf} := \frac{bn_{bf} \cdot tn_{bf}^3}{12}$

$In_{0bf} = 21093750 \cdot mm^4$

$In_{0w} := \frac{tn_w \cdot hn_w^3}{12}$

$In_{0w} = 2.3438 \cdot 10^{10} \cdot mm^4$

$\Sigma An_s := An_{tf} + An_{bf} + An_w$

$\Sigma An_s = 123000 \cdot mm^2$

$\Sigma Ay1n := An_{tf} \cdot y1n_{tf} + An_{bf} \cdot y1n_{bf} + An_w \cdot y1n_w$

$\Sigma Ay1n = 147195000 \cdot mm^3$

$\Sigma In_0 := In_{0tf} + In_{0bf} + In_{0w}$

$\Sigma In_0 = 2.3467 \cdot 10^{10} \cdot mm^4$

Distance from bottom of section to the neutral axis (N.A.) of whole section - Yn_{sb}

$Yn_{sb} := \frac{\Sigma Ay1n}{\Sigma An_s}$

$Yn_{sb} = 1196.7073 \cdot mm$

Distance from top of steel to the neutral axis (N.A.) of whole section - Yn_{st}

$Yn_{st} := (tn_{tf} + hn_w + tn_{bf}) - Yn_{sb}$

$Yn_{st} = 1433.2927 \cdot mm$

Distance between item center of gravity and N.A. of whole section - y2n

$y2n_w := y1n_w - Yn_{sb}$

$y2n_w = 128.2927 \cdot mm$

$y2n_{bf} := Yn_{sb} - y1n_{bf}$

$y2n_{bf} = 1159.2073 \cdot mm$

$y2n_{tf} := (tn_{bf} + hn_w + 0.5 \cdot tn_{tf}) - Yn_{sb}$

$y2n_{tf} = 1405.7927 \cdot mm$

Moment of inertia of whole steel section in respect to N.A. of whole section - In_s

$In_s := \Sigma In_0 + An_{tf} \cdot y2n_{tf}^2 + An_{bf} \cdot y2n_{bf}^2 + An_w \cdot y2n_w^2$ $\qquad In_s = 1.4989 \cdot 10^{11} \cdot mm^4$

Section modulus of steel section:

$Sn_{top} := \frac{In_s}{Yn_{st}}$ $\qquad Sn_{bot} := \frac{In_s}{Yn_{sb}}$

$Sn_{top} = 1.0458 \cdot 10^8 \cdot mm^3$ $\qquad Sn_{bot} = 1.2525 \cdot 10^8 \cdot mm^3$

<u>Composite section properties (steel + long reinforcement):</u>

$bn_{eff} := 3060 \cdot mm$ $\qquad A_{rb} := T_c \cdot bn_{eff} \cdot 0.0033$ $\qquad A_{rt} := T_c \cdot bn_{eff} \cdot 0.0067$

$DIA_{16} := 15.9 \cdot mm$ $\qquad A_{rb} = 2322.54 \cdot mm^2$ $\qquad A_{rt} = 4715.46 \cdot mm^2$

$A_r := A_{rb} + A_{rt}$ $\qquad y_{bb} := 25 \cdot mm + 0.5 \cdot DIA_{16}$ $\qquad y_{bt} := T_c - 50 \cdot mm - 0.5 \cdot DIA_{16}$

$A_r = 7038 \cdot mm^2$ $\qquad y_{bb} = 32.95 \cdot mm$ $\qquad y_{bt} = 172.05 \cdot mm$

Distance from the bottom of the slab to center of gravity of both reinforcement layers - yc_r

$yc_r := \frac{A_{rb} \cdot y_{bb} + A_{rt} \cdot y_{bt}}{A_{rb} + A_{rt}}$ $\qquad yc_r = 126.147 \cdot mm$

Assumed reinforcement consists #16 bars (less than #20 bars) placed within two layers uniformly distributed across the slab with two-thirds placed at the top layer. The centroid of both reinforcement layers (y_{bt}) is located $yc_r = 126.1$ from the bottom of the slab (bottom clearance CL_b = 25[mm], top clearance CL_t = 50 [mm], #16 bar diameter $DIA_{\#16}$ = 15.9 [mm].

Distance from x axis (bottom of section) to reinforcement center of gravity - y1n

$y1n_r := tn_{bf} + hn_w + tn_{tf} + tn_h + yc_r$ $\qquad y1n_r = 2830.347 \cdot mm$

Total section area - ΣAn_{sr}

$\Sigma An_{sr} := \Sigma An_s + A_r$ $\qquad \Sigma An_{sr} = 130038 \cdot mm^2$

Distance from bottom of steel to the neutral axis (N.A.) of composite section - Yn_{sb}

$\Sigma Ay1n_{sr} := \Sigma Ay1n + A_r \cdot y1n_r$ $\qquad Yn_{sbr} := \frac{\Sigma Ay1n_{sr}}{\Sigma An_{sr}}$

$\Sigma Ay1n_{sr} = 167114982.186 \cdot mm^3$ $\qquad Yn_{sbr} = 1285.1242 \cdot mm$

Distance from top of steel to the neutral axis (N.A.) of composite section - Yn_{st}

$Yn_{str} := (tn_{tf} + hn_w + tn_{bf}) - Yn_{sbr}$ $\quad Yn_{str} = 1344.8758 \cdot mm$

Distance between reinforcement center of gravity and N.A. of composite section - y2n

$y2n_r := (tn_{bf} + hn_w + tn_{tf} + tn_h + yc_r) - Yn_{sbr}$ $\quad y2n_r = 1545.2228 \cdot mm$

Composite section moment of inertia in respect to N.A. of composite section - In_s

$In_{sr} := \Sigma In_0 + An_{tf} \cdot y2n_{tf}^2 + An_{bf} \cdot y2n_{bf}^2 + An_w \cdot y2n_w^2 + A_r \cdot y2n_r^2$ $\quad In_{sr} = 1.667 \cdot 10^{11} \cdot mm^4$

$Sn_{top} = 1.0458 \cdot 10^8 \cdot mm^3$ $\quad Sn_{bot} = 1.2525 \cdot 10^8 \cdot mm^3$

Section modulus of composite section at the extreme fibers:

$Sn_{topr} := \frac{In_{sr}}{Yn_{st}}$ $\quad Sn_{botr} := \frac{In_{sr}}{Yn_{sbr}}$

$Sn_{topr} = 1.163 \cdot 10^8 \cdot mm^3$ $\quad Sn_{botr} = 1.2971 \cdot 10^8 \cdot mm^3$

<u>Short-term composite section properties (n):</u>

$f_c = 28 \cdot MPa$ $\quad E_c = 25399 \cdot MPa$ $\quad E_s = 200000 \cdot MPa$

Modular ratio: $n := \frac{E_s}{E_c}$ $\quad n = 7.8743$

Haunch thickness (top flange of steel not included): tn_h

$tn_h = 74.2 \cdot mm$

Effective flange width b_{eff}:

$bn_{tf} = 600 \cdot mm$ $\quad L_2 = 100000 \cdot mm$ $\quad T_c = 230 \cdot mm$ $\quad GS = 3700 \cdot mm$

$$pn := \begin{cases} \frac{bn_{tf}}{2} & \text{if } \frac{bn_{tf}}{2} > tn_w \\ tn_w & \text{otherwise} \end{cases} \qquad bn_{eff} := \begin{cases} \frac{L_2}{4} & \text{if } \frac{L_2}{4} < 12 \cdot T_c + pn \\ 12 \cdot T_c + pn & \text{otherwise} \end{cases}$$

$pn = 300 \cdot mm$

$$bn_{eff} := \begin{cases} bn_{eff} & \text{if } bn_{eff} < GS \\ GS & \text{otherwise} \end{cases} \qquad bn_{eff} = 3060 \cdot mm$$

a.) Concrete slab n = 9:

$bn_{1c} := \frac{bn_{eff}}{n}$ $\quad bn_{1c} = 388.608 \cdot mm$

$An_{1c} := T_c \cdot bn_{1c}$ $\quad An_{1c} = 8.938 \cdot 10^4 \cdot mm^2$

b.) Steel girder:

$\Sigma An_s = 123000 \cdot mm^2$

$In_s = 1.4989 \cdot 10^{11} \cdot mm^4$

$Yn_{sb} = 1196.7073 \cdot mm$

Distance from x axis (bottom of section) to the concrete slab center of gravity - Yn_1

$Yn_{1c} := tn_{bf} + hn_w + tn_{tf} + tn_h + 0.5 \cdot T_c$ $\quad Yn_{1c} = 2819.2 \cdot mm$

$In_{1c} := \frac{bn_{1c} \cdot T_c^3}{12}$ $\quad In_{1c} = 394016079.9091 \cdot mm^4$

$\Sigma An_1 := An_{1c} + \Sigma An_s$ $\quad \Sigma An_1 = 212379.8291 \cdot mm^2$

$\Sigma In_1 := In_s + In_{1c}$ $\quad \Sigma In_1 = 1.5029 \cdot 10^{11} \cdot mm^4$

$\Sigma AnY1n := An_{1c} \cdot Yn_{1c} + \Sigma An_s \cdot Yn_{sb}$ $\quad \Sigma AnY1n = 399174614.1731 \cdot mm^3$

Distance from x axis (bottom of section) to the neutral axis (N.A.) of composite section - $Y1n_b$

$Y1n_b := \frac{\Sigma AnY1n}{\Sigma An_1}$ $\quad Y1n_b = 1.8795 \cdot 10^3 \cdot mm$

Distance from top of steel to the neutral axis (N.A.) of composite section - $Y1n_t$

$Y1n_t := (tn_{tf} + hn_w + tn_{bf}) - Y1n_b$ $\quad Y1n_t = 750.4683 \cdot mm$

Distance between item center of gravity and N.A. of composite section - y3n

steel:

$y3n_s := Y1n_b - Yn_{sb}$

$y3n_s = 682.8243 \cdot mm$

concrete:

$y3n_c := Y1n_t + \frac{T_c}{2} + tn_h$

$y3n_c = 939.6683 \cdot mm$

Composite section moment of inertia in respect to N.A. of composite section - In_{1n}

$In_{1n} := \Sigma In_1 + \Sigma An_s \cdot y3n_s^2 + An_{1c} \cdot y3n_c^2$ $\quad In_{1n} = 2.8656 \cdot 10^{11} \cdot mm^4$

Section modulus of composite steel section:

$S1n_{top} := \frac{In_{1n}}{Y1n_t}$ $\qquad$ $S1n_{bot} := \frac{In_{1n}}{Y1n_b}$

$S1n_{top} = 381836419.6837 \cdot mm^3$ $\qquad$ $S1n_{bot} = 152461459.6704 \cdot mm^3$

Long-term composite section properties (3n):

a.) Concrete slab - $3 \cdot n = 23.$

$bn_{2c} := \frac{bn_{eff}}{3 \cdot n}$ $\qquad$ $bn_{2c} = 129.536 \cdot mm$

$An_{2c} := T_c \cdot bn_{2c}$ $\qquad$ $An_{2c} = 2.9793 \cdot 10^4 \cdot mm^2$

b.) Steel girder:

$\Sigma An_s = 123000 \cdot mm^2$

$In_s = 1.4989 \cdot 10^{11} \cdot mm^4$

$Yn_{sb} = 1196.7073 \cdot mm$

Distance from x axis (bottom of section) to the item center of gravity - Yn_2

$Yn_{2c} := Yn_{1c}$ $\qquad$ $Yn_{2c} = 2819.2 \cdot mm$

$In_{2c} := \frac{bn_{2c} \cdot T_c^3}{12}$ $\qquad$ $\Sigma An_2 := An_{2c} + \Sigma An_s$ $\qquad$ $\Sigma In_2 := In_s + In_{2c}$

$In_{2c} = 131338693.303 \cdot mm^4$ $\qquad$ $\Sigma An_2 = 152793.2764 \cdot mm^2$ $\qquad$ $\Sigma In_2 = 1.5002 \cdot 10^{11} \cdot mm^4$

$\Sigma AnY2n := An_{2c} \cdot Yn_{2c} + \Sigma An_s \cdot Yn_{sb}$ $\qquad$ $\Sigma AnY2n = 231188.2047 \cdot m \cdot mm^2$

Distance from x axis (bottom of section) to the neutral axis (N.A.) of composite section - $Y2n_b$

$Y2n_b := \frac{\Sigma AnY2n}{\Sigma An_2}$ $\qquad$ $Y2n_b = 1.5131 \cdot 10^3 \cdot mm$

Distance from top of steel to the neutral axis (N.A.) of composite section - $Y2n_t$

$Y2n_t := (tn_{tf} + hn_w + tn_{bf}) - Y2n_b$ $\qquad$ $Y2n_t = 1116.9216 \cdot mm$

Distance between item center of gravity and N.A. of composite section - y4

steel: $\qquad$ concrete:

$y4n_s := Y2n_b - Yn_{sb}$ $\qquad$ $y4n_c := Y2n_t + \frac{T_c}{2} + tn_h$

$y4n_s = 316.3711 \cdot mm$ $\qquad$ $y4n_c = 1306.1216 \cdot mm$

Composite section moment of inertia in respect to N.A. of composite section - In_{2n}

$In_{2n} := \Sigma In_2 + \Sigma An_s \cdot y4n_s^2 + An_{2c} \cdot y4n_c^2$ $\qquad$ $In_{2n} = 2.1316 \cdot 10^{11} \cdot mm^4$

Section modulus of composite steel section:

$S2n_{top} := \frac{In_{2n}}{Y2n_t}$ $\qquad$ $S2n_{bot} := \frac{In_{2n}}{Y2n_b}$

$S2n_{top} = 190847439.8923 \cdot mm^3$ $\qquad$ $S2n_{bot} = 140879435.5761 \cdot mm^3$

LIVE LOAD DISTRIBUTION FACTORS.

The average of the adjacent span lengths (L_1 and L_2) is used to compute containing K_g term distribution factor to be used in all regions of negative flexure.

Moment distribution to interior girder:

$L = 82.5 \cdot m$	$S := 3.7 \cdot m$	$hn_w = 2500 \cdot mm$	$In_s = 1.4989 \cdot 10^{11} \cdot mm^4$
$hn_w = 2500 \cdot mm$	$tn_h = 74.2 \cdot mm$	$tn_{tf} = 55 \cdot mm$	$\Sigma An_s = 123000 \cdot mm^2$
	$tn_{bf} = 75 \cdot mm$	$T_c := 230 \cdot mm$	$Yn_{sb} = 1196.7073 \cdot mm$

Distance between centers of gravity between of the basic beam and deck (e_g):

$en_g := \frac{T_c}{2} + tn_h + tn_{tf} + hn_w + tn_{bf} - Yn_{sb}$ $\qquad$ $en_g = 1622.4927 \cdot mm$

Longitudinal stiffness parameter: $Kn_g := n \cdot \left(In_s + \Sigma An_s \cdot en_g^2\right)$ $\qquad$ $Kn_g = 3.7299 \cdot 10^{12} \cdot mm^4$

One design lane loaded: $DFMI1_1 := 0.06 + \left(\frac{S}{4300 \cdot mm}\right)^{0.4} \cdot \left(\frac{S}{L}\right)^{0.3} \cdot \left(\frac{Kn_g}{L \cdot T_c^3}\right)^{0.1}$

$DFMI1_1 = 0.4831$

Two or more design lane loaded: $DFMI1_2 := 0.075 + \left(\frac{S}{2900 \cdot mm}\right)^{0.6} \cdot \left(\frac{S}{L}\right)^{0.2} \cdot \left(\frac{Kn_g}{L \cdot T_c^3}\right)^{0.1}$

$DFMI1_2 = 0.7843$

$$DFM1_{int} := \begin{cases} DFMI1_1 & \text{if } DFMI1_1 > DFMI1_2 \\ DFMI1_2 & \text{otherwise} \end{cases}$$

$DFM1_{int} = 0.7843$

All other distribution factors for regions in negative flexure for the interior girder and for the exterior girder are independent of the span length and the stiffness of the girder; therefore, they are identical to the values calculated for regions in positive flexure.

Shear distribution to interior girder: $DFV1_{int} := 1.1082$

Moment distribution to exterior girder: $DFM1_{ext} := 0.9865$

Shear distribution to exterior girder: $DFV1_{ext} := 0.9865$

Summary of live load distribution factors for negative flexure regions between points N and K.

Moment:

Negative flexure strength / service limit states distribution factors: $DFM1_{int} = 0.7843$ (interior girder)

$DFM1_{ext} = 0.9865$ (exterior girder)

$$Test_1 := \begin{cases} 1 & \text{if } DFM1_{ext} < DFM1_{int} \\ 0 & \text{otherwise} \end{cases}$$

$Test_1 = 0$

Test = 1 : O.K. - interior load distribution factors govern.

Test = 0 : N.G. - exterior load distribution factors govern and exterior girder would have to be design separetly.

Shear:

Negative flexure strength / service limit states distribution factors: $DFV1_{int} = 1.1082$ (interior girder)

$DFV1_{ext} = 0.9865$ (exterior girder)

$$Test_2 := \begin{cases} 1 & \text{if } DFV1_{ext} < DFV1_{int} \\ 0 & \text{otherwise} \end{cases}$$

$Test_2 = 1$

Test = 1 : O.K. - interior load distribution factors govern.

Test = 0 : N.G. - exterior load distribution factors govern and exterior girder would have to be design separetly.

MOMENTS AT POINT K (SPAN 1):

Negative flexure strength / service limit states distribution factor: $DFM1_{int} = 0.7843$

Point "K" in exterior span is located 16.8 [m] from dead loads point of inflection "N" and 58.8 [m] from exterior support (pt. 0.9046 of span 1).

Moments (from Qcon):

DC=DC$_1$ +DC$_2$ negative moment:

$MDCn_{0.9} := 15916 \cdot kN \cdot m$ $\quad MDCn_{1.0} := 24736 \cdot kN \cdot m$

$$MDCn_K := \frac{(MDCn_{1.0} - MDCn_{0.9}) \cdot 0.46}{10} + MDCn_{0.9} \qquad MDCn_K = 16321.72 \cdot kN \cdot m$$

DC$_1$ negative moment:

$MDC1n_{0.9} := 14557 \cdot kN \cdot m$ $\quad MDC1n_{1.0} := 22624 \cdot kN \cdot m$

$$MDC1n_K := \frac{(MDC1n_{1.0} - MDC1n_{0.9}) \cdot 0.46}{10} + MDC1n_{0.9} \qquad MDC1n_K = 14928.082 \cdot kN \cdot m$$

DC$_2$ negative moment:

$MDC2n_{0.9} := 1358 \cdot kN \cdot m$ $\quad MDC2n_{1.0} := 2112 \cdot kN \cdot m$

$$MDC2n_K := \frac{(MDC2n_{1.0} - MDC2n_{0.9}) \cdot 0.46}{10} + MDC2n_{0.9} \qquad MDC2n_K = 1392.684 \cdot kN \cdot m$$

DW negative moment:

$MDWn_{0.9} := 1502 \cdot kN \cdot m$ $\quad MDWn_{1.0} := 2334 \cdot kN \cdot m$

$$MDWn_K := \frac{(MDWn_{1.0} - MDWn_{0.9}) \cdot 0.46}{10} + MDWn_{0.9} \qquad MDWn_K = 1540.272 \cdot kN \cdot m$$

LL + Impact negative moment:
LL = (Dual Truck Train x Impact) + Lane
Impact = 1.33

$MLLn_{0.9} := 10795 \cdot kN \cdot m$ $\quad MLLn_{1.0} := 13446 \cdot kN \cdot m$

$$MLLn_K := \frac{(MLLn_{1.0} - MLLn_{0.9}) \cdot 0.46}{10} + MLLn_{0.9} \qquad MLLn_K = 10916.946 \cdot kN \cdot m$$

STRENGTH I.

Maximum negative moment for Strength I Limit State:

$$\eta 1 \Sigma \gamma i MSTn_K := \gamma 1_{DC} \cdot MDCn_K + \gamma 1_{DW} \cdot MDWn_K + \gamma 1_{LL} \cdot DFM1_{int} \cdot MLLn_K$$

$$\eta 1 \Sigma \gamma i MSTn_K = 37696.5998 \cdot kN \cdot m$$

SECTION DESIGN:

Location of the plastic neutral axis (PNA).

$\Sigma An_s = 123000 \cdot mm^2$ $\quad bn_{eff} = 3060 \cdot mm$ $\quad T_c = 230 \cdot mm$ $\quad tn_h = 74.2 \cdot mm$

$F_y = 345 \cdot MPa$ $\quad f_c = 28 \cdot MPa$ $\quad f_y = 420 \cdot MPa$

a.) Top flange:

$tn_{tf} = 55 \cdot mm$

$bn_{tf} = 600 \cdot mm$

b.) Bottom flange:

$tn_{bf} = 75 \cdot mm$

$bn_{bf} = 600 \cdot mm$

c.) Web:

$tn_w = 18 \cdot mm$

$hn_w = 2500 \cdot mm$

Plastic forces:

Reinforcement (assuming deck reinforcement area = 1% of deck area)

Top reinforcement: $P_{rt} := f_y \cdot bn_{eff} \cdot T_c \cdot 0.0067$ $\quad P_{rt} = 1980.4932 \cdot kN$

Bottom reinforcement: $P_{rb} := f_y \cdot bn_{eff} \cdot T_c \cdot 0.0033$ $\quad P_{rb} = 975.4668 \cdot kN$

Tension flange: $Pn_t := F_y \cdot bn_{tf} \cdot tn_{tf}$ $\quad Pn_t = 11385 \cdot kN$

Web: $Pn_w := F_y \cdot hn_w \cdot tn_w$ $\quad Pn_w = 15525 \cdot kN$

Compression flange: $Pn_c := F_y \cdot bn_{bf} \cdot tn_{bf}$ $\quad Pn_c = 15525 \cdot kN$

$Pn_w + Pn_c = 31050 \cdot kN$ $\quad Pn_t + P_{rt} + P_{rb} = 14341 \cdot kN$

$Pn_w + Pn_c \geq Pn_t + P_{rt} + P_{rb}$ PNA in web

Calculation of distance Yn_{PNA} from bottom of top tension flange to PNA:

$$Yn_{PNA} := \begin{cases} \left[\frac{hn_w}{2} \cdot \left(\frac{Pn_c - Pn_t - P_{rt} - P_{rb}}{Pn_w} + 1\right)\right] & \text{if } Pn_c + Pn_w \geq Pn_t + P_{rb} + P_{rt} \quad \text{PNA in web} \\ \left[\frac{tn_{tf}}{2} \cdot \left(\frac{Pn_w + Pn_c - P_{rt} - P_{rb}}{Pn_t} + 1\right)\right] & \text{otherwise} \quad \text{PNA in top flange} \end{cases}$$

PNA in web: $Yn_{PNA} = 1345.3333 \cdot mm$

Calculation of plastic moment capacity (Mn_p).

$tn_h = 0.0742 \cdot m$ $\quad CL_{rt} := 50 \cdot mm$ $\quad CL_{rb} := 25 \cdot mm$ $\quad DIA_{rt} := 15.9 \cdot mm$ $\quad DIA_{rb} := 15.9 \cdot mm$

Distance from P_{rt} to PNA: $\quad dn_{rt} := T_c - \left(CL_{rt} + \frac{DIA_{rt}}{2}\right) + tn_h + tn_{tf} + Yn_{PNA}$ $\quad dn_{rt} = 1646.6 \cdot mm$

Distance from P_{rb} to PNA: $\quad dn_{rb} := CL_{rb} + \frac{DIA_{rb}}{2} + tn_h + Yn_{PNA}$ $\quad dn_{rb} = 1452.5 \cdot mm$

Distance from P_t to PNA: $\quad dn_t := \frac{tn_{tf}}{2} + Yn_{PNA}$ $\quad dn_t = 1372.8 \cdot mm$

Distance from P_w to PNA: $\quad dn_w := Yn_{PNA} - \frac{hn_w}{2}$ $\quad dn_w = 95.3 \cdot mm$

Distance from P_c to PNA: $\quad dn_c := \left(hn_w + \frac{tn_{bf}}{2}\right) - Yn_{PNA}$ $\quad dn_c = 1192.2 \cdot mm$

$$Mn_p := \frac{Pn_w}{2 \cdot hn_w} \cdot \left[Yn_{PNA}^2 + \left(hn_w - Yn_{PNA}\right)^2\right] + \left(Pn_c \cdot dn_c + P_{rt} \cdot dn_{rt} + P_{rb} \cdot dn_{rb} + Pn_t \cdot dn_t\right)$$

$Mn_p = 48575.5556 \cdot kN \cdot m$

Check if the section qualifies as a compact section.

Web slenderness requirement for compact section: $\quad \frac{2 \cdot Dn_{cp}}{tn_w} \le 3.76 \cdot \sqrt{\frac{E_s}{F_y}}$

Depth of the web in compression at the plastic moment - Dn_{cp}

Depth of web in compression at the plastic moment for the section in negative flexure with PNA in the web:

$$Dn_{cp} := \frac{hn_w}{2 \cdot hn_w \cdot tn_w \cdot F_y} \cdot \left(F_y \cdot tn_{tf} \cdot bn_{tf} + F_y \cdot hn_w \cdot tn_w + f_y \cdot bn_{eff} \cdot T_c \cdot 0.01 - F_y \cdot tn_{bf} \cdot bn_{bf}\right)$$

$Dn_{cp} = 1154.6667 \cdot mm$

$$\frac{2 \cdot Dn_{cp}}{tn_w} = 128.2963 \quad > \quad 3.76 \cdot \sqrt{\frac{E_s}{F_y}} = 90.5302$$

Requirement is not satisfied - section non-compact.

Section proportions requirement:

$$0.1 \le \frac{In_{yc}}{In_y} \le 0.9$$

Moment of interia of the steel section about the vertical axis in the plane of the web in [mm^4]:

$$In_y := \frac{tn_{bf} \cdot bn_{bf}^3}{12} + \frac{hn_w \cdot tn_w^3}{12} + \frac{tn_{tf} \cdot bn_{tf}^3}{12} \qquad In_y = 2.3412 \cdot 10^9 \cdot mm^4$$

Moment of interia of the compression flange of the steel section about the vertical axis in the plane of the web in [mm^4]:

$$In_{yc} := \frac{tn_{tf} \cdot bn_{tf}^3}{12} \qquad In_{yc} = 990000000 \cdot mm^4$$

$$0.1 < \frac{In_{yc}}{In_y} = 0.4229 < 0.9$$

Web slenderness requirement for non-compact section.

$$\frac{2 \cdot Dn_c}{tn_w} \le 6.77 \cdot \sqrt{\frac{E_s}{fn_c}}$$

fn_c - stress in the compression flange due to factored loading [MPa]:

$$fn_{cDC1} := \frac{\eta 1 \cdot \gamma 1_{DC} \cdot MDC1n_K}{Sn_{bot}} \qquad fn_{cDC1} = 148.9773 \cdot MPa$$

$$fn_{cDC2} := \frac{\eta 1 \cdot \gamma 1_{DC} \cdot MDC2n_K}{Sn_{botr}} \qquad fn_{cDC2} = 13.4208 \cdot MPa$$

$$fn_{cDW} := \frac{\eta 1 \cdot \gamma 1_{DW} \cdot MDWn_K}{Sn_{botr}} \qquad fn_{cDW} = 17.8116 \cdot MPa$$

$$fn_{cLL} := \frac{\eta 1 \cdot \gamma 1_{LL} \cdot DFM1_{int} \cdot MLLn_K}{Sn_{botr}} \qquad fn_{cLL} = 115.5165 \cdot MPa$$

$$fn_c := fn_{cDC1} + fn_{cDC2} + fn_{cDW} + fn_{cLL} \qquad fn_c = 295.7262 \cdot MPa$$

Dn_c - depth of the web in compression in the elastic range: $Dn_c := Yn_{sbr} - tn_{bf}$

$$Dn_c = 1210.1242 \cdot mm$$

$$\frac{2 \cdot Dn_c}{tn_w} = 134.4582 < 6.77 \cdot \sqrt{\frac{E_s}{fn_c}} = 176.0592$$

Web slenderness requirement satisfied

Compression flange slenderness requirement for non-compact section.

$$\frac{bn_{bf}}{2 \cdot tn_{bf}} \le 1.38 \cdot \sqrt{\frac{E_s}{fn_c \cdot \sqrt{\frac{2 \cdot Dn_c}{tn_w}}}}$$

$$\frac{bn_{bf}}{2 \cdot tn_{bf}} = 4 \qquad < \qquad 1.38 \cdot \sqrt{\frac{E_s}{fn_c \cdot \sqrt{\frac{2 \cdot Dn_c}{tn_w}}}} = 10.5391$$

Compression flange slenderness requirement satisfied

Compression flange bracing requirement for non-compact section.

L_b - distance between points bracing the compression flange [mm] (assumed $L_b := 6800 \cdot mm$):

$$F_{yc} := F_y \qquad F_{yc} = 345 \cdot MPa$$

r_t - minimum radius of gyration of the compression flange of the steel section plus one-third of the web in compression taken about the vertical axis

$bn_{bf} = 600 \cdot mm \qquad tn_{bf} = 75 \cdot mm \qquad tn_w = 18 \cdot mm \qquad Dn_c = 1210.1242 \cdot mm$

$$I_t := \frac{bn_{bf}^3 \cdot tn_{bf}}{12} + \frac{tn_w^3 \cdot \frac{Dn_c}{3}}{12} \qquad A_t := bn_{bf} \cdot tn_{bf} + tn_w \cdot \frac{Dn_c}{3} \qquad r_t := \sqrt{\frac{I_t}{A_t}}$$

$$I_t = 1.3502 \cdot 10^9 \cdot mm^4 \qquad A_t = 52260.7453 \cdot mm^2 \qquad r_t = 160.7351 \cdot mm$$

$$L_b \le 1.76 \cdot r_t \cdot \sqrt{\frac{E_s}{F_{yc}}}$$

$$L_b = 6800 \cdot mm \qquad < \qquad 1.76 \cdot r_t \cdot \sqrt{\frac{E_s}{F_{yc}}} = 6811.28 \cdot mm$$

Compression flange slenderness requirement satisfied

Nominal flexural resistance.

For non-compact sections, a nominal flexural resistance is computed for each flange. Nominal flexural resistance of each flange in terms of stress Fn

Compression flange:

$R_{hc} := 1$ - flange stress-reduction factor (equal to 1 for homogenous sections)

For members with compression flange area equal or greater than the tension flange $\lambda_b = 5.76$.

For members with compression flange area less than the tension flange $\lambda_b = 4.64$.

$$\lambda_b := \begin{cases} 5.76 & \text{if } tn_{bf} \cdot bn_{bf} \geq tn_{tf} \cdot bn_{tf} \\ 4.64 & \text{otherwise} \end{cases} \qquad \lambda_b = 5.76$$

$$a_r := \frac{2 \cdot dn_c \cdot tn_w}{tn_{bf} \cdot bn_{bf}} \qquad a_r = 0.9537$$

$$\frac{2 \cdot Dn_c}{tn_w} = 134.4582 > \lambda_b \cdot \sqrt{\frac{E_s}{fn_c}} = 149.7934 \text{ therefore: } R_{bc} := 1 - \frac{a_r}{(1200 + 300 \cdot a_r)} \cdot \left(\frac{2 \cdot Dn_c}{tn_w} - \lambda_b \cdot \sqrt{\frac{E_s}{fn_c}} \right)$$

$$R_{bc} = 1.0098 \qquad F_{nc} := R_{bc} \cdot R_{hc} \cdot F_{yc} \qquad F_{nc} = 348.3953 \cdot MPa$$

Tension flange:

$$R_{ht} := 1 \qquad R_{bt} := 1 \qquad F_{yt} := F_y \qquad F_{nt} := R_{bt} \cdot R_{ht} \cdot F_{yt} \qquad F_{nt} = 345 \cdot MPa$$

Strength limit state for flexure.

Checking composite non-compacted section for the strength limit state is to compare the sum of the stresses in each flange due to the factored loads (Fu) to the factored flexural resistance of the flange expressed in terms of stress.

Compression flange:

$\eta \Sigma \gamma_i fc_i = fn_c$ - stress in the compression flange due to factored loading [MPa]:

$$\phi_f := 1 \qquad fn_c = 295.7262 \cdot MPa \qquad fn_c \leq \phi_f \cdot F_{nc}$$

$$fn_c = 295.7262 \cdot MPa < \phi_f \cdot F_{nc} = 348.3953 \cdot MPa$$

Compression flange satisfies the srtength I limit state for flexure

$$DIFFRENCE := \phi_f \cdot F_{nc} - fn_c \qquad DIFFRENCE = 52.6692 \cdot MPa$$

$$\%DIFFRENCE := \frac{DIFFRENCE \cdot 100}{\phi_f \cdot F_{nc}} \qquad \%DIFFRENCE = 15.1176$$

Tension flange:

$\eta\Sigma\gamma_i ft_i = fn_t$ - stress in the tension flange due to factored loading [MPa]:

$$fn_t \le \phi_f F_{nt}$$

$$fn_{tDC1} := \frac{\eta 1 \cdot \gamma 1_{DC} \cdot MDC1n_K}{Sn_{top}} \qquad fn_{tDC1} = 178.4296 \cdot MPa$$

$$fn_{tDC2} := \frac{\eta 1 \cdot \gamma 1_{DC} \cdot MDC2n_K}{Sn_{topr}} \qquad fn_{tDC2} = 14.9681 \cdot MPa$$

$$fn_{tDW} := \frac{\eta 1 \cdot \gamma 1_{DW} \cdot MDWn_K}{Sn_{topr}} \qquad fn_{tDW} = 19.8652 \cdot MPa$$

$$fn_{tLL} := \frac{\eta 1 \cdot \gamma 1_{LL} \cdot DFM1_{int} \cdot MLLn_K}{Sn_{topr}} \qquad fn_{tLL} = 128.8349 \cdot MPa$$

$$fn_t := fn_{tDC1} + fn_{tDC2} + fn_{tDW} + fn_{tLL} \qquad fn_t = 342.0979 \cdot MPa$$

$$fn_t = 342.0979 \cdot MPa \quad < \quad \phi_f F_{nt} = 345 \cdot MPa$$

Tension flange satisfiesthe srtength I limit state for flexure

$$DIFFRENCE := \phi_f F_{nt} - fn_t \qquad DIFFRENCE = 2.9021 \cdot MPa$$

$$\%DIFFRENCE := \frac{DIFFRENCE \cdot 100}{\phi_f F_{nt}} \qquad \%DIFFRENCE = 0.8412$$

12. CHANGE OF FLANGES DIMENSIONS AT POINT L (SPAN 2, NEGATIVE FLEXURE):

Point "L" in interior span is located 9.0 [m] from interior support. (pt. 0.09 of span 1).

SECTION PROPERTIES BETWEEN POINTS "L" AND "B":

Non-composite section properties (n = ∞):

a.) Top flange:

$tn_{tf} := 38 \cdot mm$

$bn_{tf} := 450 \cdot mm$

$An_{tf} := bn_{tf} \cdot tn_{tf}$

$An_{tf} = 17100 \cdot mm^2$

$tn_h := (53 \cdot mm + 76.2 \cdot mm) - tn_{tf}$

b.) Bottom flange:

$tn_{bf} := 66 \cdot mm$

$bn_{bf} := 600 \cdot mm$

$An_{bf} := bn_{bf} \cdot tn_{bf}$

$An_{bf} = 39600 \cdot mm^2$

$tn_h = 0.0912 \cdot m$

c.) Web:

$tn_w := 18 \cdot mm$

$hn_w := 2500 \cdot mm$

$An_w := tn_w \cdot hn_w$

$An_w = 45000 \cdot mm^2$

Distance from x axis (bottom of the whole section) to the item center of gravity - y1n

$y1n_{tf} := tn_{bf} + hn_w + 0.5 \cdot tn_{tf}$

$y1n_{tf} = 2585 \cdot mm$

$y1n_{bf} := 0.5 \cdot tn_{bf}$

$y1n_{bf} = 33 \cdot mm$

$y1n_w := tn_{bf} + 0.5 \cdot hn_w$

$y1n_w = 1316 \cdot mm$

$In_{0tf} := \frac{bn_{tf} \cdot tn_{tf}^3}{12}$

$In_{0tf} = 2057700 \cdot mm^4$

$In_{0bf} := \frac{bn_{bf} \cdot tn_{bf}^3}{12}$

$In_{0bf} = 14374800 \cdot mm^4$

$In_{0w} := \frac{tn_w \cdot hn_w^3}{12}$

$In_{0w} = 2.3438 \cdot 10^{10} \cdot mm^4$

$\Sigma An_s := An_{tf} + An_{bf} + An_w$

$\Sigma An_s = 101700 \cdot mm^2$

$\Sigma Ay1n := An_{tf} \cdot y1n_{tf} + An_{bf} \cdot y1n_{bf} + An_w \cdot y1n_w$

$\Sigma Ay1n = 104730300 \cdot mm^3$

$\Sigma In_0 := In_{0tf} + In_{0bf} + In_{0w}$

$\Sigma In_0 = 2.3454 \cdot 10^{10} \cdot mm^4$

Distance from bottom of section to the neutral axis (N.A.) of whole section - Yn_{sb}

$Yn_{sb} := \frac{\Sigma Ay1n}{\Sigma An_s}$

$Yn_{sb} = 1029.7965 \cdot mm$

Distance from top of steel to the neutral axis (N.A.) of whole section - Yn_{st}

$Yn_{st} := (tn_{tf} + hn_w + tn_{bf}) - Yn_{sb}$

$Yn_{st} = 1574.2035 \cdot mm$

Distance between item center of gravity and N.A. of whole section - y2n

$y2n_w := y1n_w - Yn_{sb}$

$y2n_w = 286.2035 \cdot mm$

$y2n_{bf} := Yn_{sb} - y1n_{bf}$

$y2n_{bf} = 996.7965 \cdot mm$

$y2n_{tf} := (tn_{bf} + hn_w + 0.5 \cdot tn_{tf}) - Yn_{sb}$

$y2n_{tf} = 1555.2035 \cdot mm$

Moment of inertia of whole steel section in respect to N.A. of whole section - In_s

$In_s := \Sigma In_0 + An_{tf} \cdot y2n_{tf}^2 + An_{bf} \cdot y2n_{bf}^2 + An_w \cdot y2n_w^2$ $\quad In_s = 1.0785 \cdot 10^{11} \cdot mm^4$

Section modulus of steel section:

$Sn_{top} := \frac{In_s}{Yn_{st}}$ $\quad Sn_{bot} := \frac{In_s}{Yn_{sb}}$

$Sn_{top} = 68508124.5586 \cdot mm^3$ $\quad Sn_{bot} = 1.0473 \cdot 10^8 \cdot mm^3$

<u>Composite section properties (steel + long reinforcement):</u>

$bn_{eff} := 3060 \cdot mm$ $\quad A_{rb} := T_c \cdot bn_{eff} \cdot 0.0033$ $\quad A_{rt} := T_c \cdot bn_{eff} \cdot 0.0067$

$DIA_{16} := 15.9 \cdot mm$ $\quad A_{rb} = 2322.54 \cdot mm^2$ $\quad A_{rt} = 4715.46 \cdot mm^2$

$A_r := A_{rb} + A_{rt}$ $\quad y_{bb} := 25 \cdot mm + 0.5 \cdot DIA_{16}$ $\quad y_{bt} := T_c - 50 \cdot mm - 0.5 \cdot DIA_{16}$

$A_r = 7038 \cdot mm^2$ $\quad y_{bb} = 32.95 \cdot mm$ $\quad y_{bt} = 172.05 \cdot mm$

Distance from the bottom of the slab to center of gravity of both reinforcement layers - yc_r

$yc_r := \frac{A_{rb} \cdot y_{bb} + A_{rt} \cdot y_{bt}}{A_{rb} + A_{rt}}$ $\quad yc_r = 126.147 \cdot mm$

Assumed reinforcement consists #16 bars (less than #20 bars) placed within two layers uniformly distributed across the slab with two-thirds placed at the top layer. The centroid of both reinforcement layers (y_{bt}) is located $yc_r = 126.1$ from the bottom of the slab (bottom clearance CL_b = 25[mm], top clearance CL_t = 50 [mm], #16 bar diameter $DIA_{\#16}$ = 15.9 [mm].

Distance from x axis (bottom of section) to reinforcement center of gravity - y1n

$y1n_r := tn_{bf} + hn_w + tn_{tf} + tn_h + yc_r$ $\quad y1n_r = 2821.347 \cdot mm$

Total section area - ΣAn_{sr}

$\Sigma An_{sr} := \Sigma An_s + A_r$ $\quad \Sigma An_{sr} = 108738 \cdot mm^2$

Distance from bottom of steel to the neutral axis (N.A.) of composite section - Yn_{sb}

$\Sigma Ay1n_{sr} := \Sigma Ay1n + A_r \cdot y1n_r$ $\quad Yn_{sbr} := \frac{\Sigma Ay1n_{sr}}{\Sigma An_{sr}}$

$\Sigma Ay1n_{sr} = 124586940.186 \cdot mm^3$ $\quad Yn_{sbr} = 1145.7535 \cdot mm$

Distance from top of steel to the neutral axis (N.A.) of composite section - Yn_{st}

$Yn_{str} := (tn_{tf} + hn_w + tn_{bf}) - Yn_{sbr}$ $\quad Yn_{str} = 1458.2465 \cdot mm$

Distance between reinforcement center of gravity and N.A. of composite section - y2n

$y2n_r := (tn_{bf} + hn_w + tn_{tf} + tn_h + yc_r) - Yn_{sbr}$ $\quad y2n_r = 1675.5935 \cdot mm$

Composite section moment of inertia in respect to N.A. of composite section - In_s

$In_{sr} := \Sigma In_0 + An_{tf} \cdot y2n_{tf}^2 + An_{bf} \cdot y2n_{bf}^2 + An_w \cdot y2n_w^2 + A_r \cdot y2n_r^2$ $\quad In_{sr} = 1.2761 \cdot 10^{11} \cdot mm^4$

$Sn_{top} = 68508124.5586 \cdot mm^3$ $\quad Sn_{bot} = 1.0473 \cdot 10^8 \cdot mm^3$

Section modulus of composite section at the extreme fibers:

$Sn_{topr} := \frac{In_{sr}}{Yn_{st}}$ $\quad Sn_{botr} := \frac{In_{sr}}{Yn_{sbr}}$

$Sn_{topr} = 81060494.5044 \cdot mm^3$ $\quad Sn_{botr} = 1.1137 \cdot 10^8 \cdot mm^3$

<u>Short-term composite section properties (n):</u>

$f_c = 28 \cdot MPa$ $\quad E_c = 25399 \cdot MPa$ $\quad E_s = 200000 \cdot MPa$

Modular ratio: $n := \frac{E_s}{E_c}$ $\quad n = 7.8743$

Haunch thickness (top flange of steel not included): tn_h

$tn_h = 91.2 \cdot mm$

Effective flange width b_{eff}:

$bn_{tf} = 450 \cdot mm$ $\quad L_2 = 100000 \cdot mm$ $\quad T_c = 230 \cdot mm$ $\quad GS = 3700 \cdot mm$

$pn := \begin{cases} \frac{bn_{tf}}{2} & \text{if } \frac{bn_{tf}}{2} > tn_w \\ tn_w & \text{otherwise} \end{cases}$ $\quad bn_{eff} := \begin{cases} \frac{L_2}{4} & \text{if } \frac{L_2}{4} < 12 \cdot T_c + pn \\ 12 \cdot T_c + pn & \text{otherwise} \end{cases}$

$pn = 225 \cdot mm$ $\quad bn_{eff} := \begin{cases} bn_{eff} & \text{if } bn_{eff} < GS \\ GS & \text{otherwise} \end{cases}$ $\quad bn_{eff} = 2985 \cdot mm$

a.) Concrete slab n = 9:

$bn_{1c} := \frac{bn_{eff}}{n}$ $\quad bn_{1c} = 379.0832 \cdot mm$

$An_{1c} := T_c \cdot bn_{1c}$ $\quad An_{1c} = 8.7189 \cdot 10^4 \cdot mm^2$

b.) Steel girder:

$\Sigma An_s = 101700 \cdot mm^2$

$In_s = 1.0785 \cdot 10^{11} \cdot mm^4$

$Yn_{sb} = 1029.7965 \cdot mm$

Distance from x axis (bottom of section) to the concrete slab center of gravity - Yn_1

$Yn_{1c} := tn_{bf} + hn_w + tn_{tf} + tn_h + 0.5 \cdot T_c$ $\quad Yn_{1c} = 2810.2 \cdot mm$

$In_{1c} := \frac{bn_{1c} \cdot T_c^3}{12}$ $\quad \Sigma An_1 := An_{1c} + \Sigma An_s$ $\quad \Sigma In_1 := In_s + In_{1c}$

$In_{1c} = 384358823.0486 \cdot mm^4$ $\quad \Sigma An_1 = 188889.147 \cdot mm^2$ $\quad \Sigma In_1 = 1.0823 \cdot 10^{11} \cdot mm^4$

$\Sigma AnY1n := An_{1c} \cdot Yn_{1c} + \Sigma An_s \cdot Yn_{sb}$ $\quad \Sigma AnY1n = 349749240.9144 \cdot mm^3$

Distance from x axis (bottom of section) to the neutral axis (N.A.) of composite section - $Y1n_b$

$Y1n_b := \frac{\Sigma AnY1n}{\Sigma An_1}$ $\quad Y1n_b = 1.8516 \cdot 10^3 \cdot mm$

Distance from top of steel to the neutral axis (N.A.) of composite section - $Y1n_t$

$Y1n_t := (tn_{tf} + hn_w + tn_{bf}) - Y1n_b$ $\quad Y1n_t = 752.3889 \cdot mm$

Distance between item center of gravity and N.A. of composite section - y3n

steel:

$y3n_s := Y1n_b - Yn_{sb}$

$y3n_s = 821.8146 \cdot mm$

concrete:

$y3n_c := Y1n_t + \frac{T_c}{2} + tn_h$

$y3n_c = 958.5889 \cdot mm$

Composite section moment of inertia in respect to N.A. of composite section - In_{1n}

$In_{1n} := \Sigma In_1 + \Sigma An_s \cdot y3n_s^2 + An_{1c} \cdot y3n_c^2$ $\quad In_{1n} = 2.5703 \cdot 10^{11} \cdot mm^4$

Section modulus of composite steel section:

$S1n_{top} := \frac{In_{1n}}{Y1n_t}$ $\qquad$ $S1n_{bot} := \frac{In_{1n}}{Y1n_b}$

$S1n_{top} = 341623373.6331 \cdot mm^3$ $\qquad$ $S1n_{bot} = 138816209.9443 \cdot mm^3$

Long-term composite section properties (3n):

a.) Concrete slab - $3 \cdot n = 23.$

$bn_{2c} := \frac{bn_{eff}}{3 \cdot n}$ $\qquad$ $bn_{2c} = 126.3611 \cdot mm$

$An_{2c} := T_c \cdot bn_{2c}$ $\qquad$ $An_{2c} = 2.9063 \cdot 10^4 \cdot mm^2$

b.) Steel girder:

$\Sigma An_s = 101700 \cdot mm^2$

$In_s = 1.0785 \cdot 10^{11} \cdot mm^4$

$Yn_{sb} = 1029.7965 \cdot mm$

Distance from x axis (bottom of section) to the item center of gravity - Yn_2

$Yn_{2c} := Yn_{1c}$ $\qquad$ $Yn_{2c} = 2810.2 \cdot mm$

$In_{2c} := \frac{bn_{2c} \cdot T_c^3}{12}$ $\qquad$ $\Sigma An_2 := An_{2c} + \Sigma An_s$ $\qquad$ $\Sigma In_2 := In_s + In_{2c}$

$In_{2c} = 128119607.6829 \cdot mm^4$ $\qquad$ $\Sigma An_2 = 130763.049 \cdot mm^2$ $\qquad$ $\Sigma In_2 = 1.0797 \cdot 10^{11} \cdot mm^4$

$\Sigma AnY2n := An_{2c} \cdot Yn_{2c} + \Sigma An_s \cdot Yn_{sb}$ $\qquad$ $\Sigma AnY2n = 186403.2803 \cdot m \cdot mm^2$

Distance from x axis (bottom of section) to the neutral axis (N.A.) of composite section - $Y2n_b$

$Y2n_b := \frac{\Sigma AnY2n}{\Sigma An_2}$ $\qquad$ $Y2n_b = 1.4255 \cdot 10^3 \cdot mm$

Distance from top of steel to the neutral axis (N.A.) of composite section - $Y2n_t$

$Y2n_t := (tn_{tf} + hn_w + tn_{bf}) - Y2n_b$ $\qquad$ $Y2n_t = 1178.4958 \cdot mm$

Distance between item center of gravity and N.A. of composite section - y4

steel: $\qquad$ concrete:

$y4n_s := Y2n_b - Yn_{sb}$ $\qquad$ $y4n_c := Y2n_t + \frac{T_c}{2} + tn_h$

$y4n_s = 395.7078 \cdot mm$ $\qquad$ $y4n_c = 1384.6958 \cdot mm$

Composite section moment of inertia in respect to N.A. of composite section - In_{2n}

$In_{2n} := \Sigma In_2 + \Sigma An_s \cdot y4n_s^2 + An_{2c} \cdot y4n_c^2$ $\qquad$ $In_{2n} = 1.7962 \cdot 10^{11} \cdot mm^4$

Section modulus of composite steel section:

$S2n_{top} := \frac{In_{2n}}{Y2n_t}$ $\qquad$ $S2n_{bot} := \frac{In_{2n}}{Y2n_b}$

$S2n_{top} = 152417592.8824 \cdot mm^3$ $\qquad$ $S2n_{bot} = 126006982.616 \cdot mm^3$

LIVE LOAD DISTRIBUTION FACTORS.

The average of the adjacent span lengths (L_1 and L_2) is used to compute containing K_g term distribution factor to be used in all regions of negative flexure.

Moment distribution to interior girder:

$L = 82.5 \cdot m$	$S := 3.7 \cdot m$	$hn_w = 2500 \cdot mm$	$In_s = 1.0785 \cdot 10^{11} \cdot mm^4$
$hn_w = 2500 \cdot mm$	$tn_h = 91.2 \cdot mm$	$tn_{tf} = 38 \cdot mm$	$\Sigma An_s = 101700 \cdot mm^2$
	$tn_{bf} = 66 \cdot mm$	$T_c := 230 \cdot mm$	$Yn_{sb} = 1029.7965 \cdot mm$

Distance between centers of gravity between of the basic beam and deck (e_g):

$en_g := \frac{T_c}{2} + tn_h + tn_{tf} + hn_w + tn_{bf} - Yn_{sb}$ $\qquad$ $en_g = 1780.4035 \cdot mm$

Longitudinal stiffness parameter: $Kn_g := n \cdot \left(In_s + \Sigma An_s \cdot en_g^2\right)$ $\qquad$ $Kn_g = 3.3876 \cdot 10^{12} \cdot mm^4$

One design lane loaded: $DFMI1_1 := 0.06 + \left(\frac{S}{4300 \cdot mm}\right)^{0.4} \cdot \left(\frac{S}{L}\right)^{0.3} \cdot \left(\frac{Kn_g}{L \cdot T_c^3}\right)^{0.1}$

$DFMI1_1 = 0.479$

Two or more design lane loaded: $DFMI1_2 := 0.075 + \left(\frac{S}{2900 \cdot mm}\right)^{0.6} \cdot \left(\frac{S}{L}\right)^{0.2} \cdot \left(\frac{Kn_g}{L \cdot T_c^3}\right)^{0.1}$

$DFMI1_2 = 0.7775$

$$DFM1_{int} := \begin{cases} DFMI1_1 & \text{if } DFMI1_1 > DFMI1_2 \\ DFMI1_2 & \text{otherwise} \end{cases}$$

$DFM1_{int} = 0.7775$

All other distribution factors for regions in negative flexure for the interior girder and for the exterior girder are independent of the span length and the stiffness of the girder; therefore, they are identical to the values calculated for regions in positive flexure.

Shear distribution to interior girder: $DFV1_{int} := 1.1082$

Moment distribution to exterior girder: $DFM1_{ext} := 0.9865$

Shear distribution to exterior girder: $DFV1_{ext} := 0.9865$

Summary of live load distribution factors for negative flexure regions between points L and B.

Moment:

Negative flexure strength / service limit states distribution factors: $DFM1_{int} = 0.7775$ (interior girder)

$DFM1_{ext} = 0.9865$ (exterior girder)

$$Test_1 := \begin{cases} 1 & \text{if } DFM1_{ext} < DFM1_{int} \\ 0 & \text{otherwise} \end{cases}$$

$Test_1 = 0$

Test = 1 : O.K. - interior load distribution factors govern.

Test = 0 : N.G. - exterior load distribution factors govern and exterior girder would have to be design separetly.

Shear:

Negative flexure strength / service limit states distribution factors: $DFV1_{int} = 1.1082$ (interior girder)

$DFV1_{ext} = 0.9865$ (exterior girder)

$$Test_2 := \begin{cases} 1 & \text{if } DFV1_{ext} < DFV1_{int} \\ 0 & \text{otherwise} \end{cases}$$

$Test_2 = 1$

Test = 1 : O.K. - interior load distribution factors govern.

Test = 0 : N.G. - exterior load distribution factors govern and exterior girder would have to be design separetly.

MOMENTS AT POINT L (SPAN 2):

Negative flexure strength / service limit states distribution factor: $DFM1_{int} = 0.7775$

Point "L" in interior span is located 9.0 [m] from interrior support (pt. 0.09 of span 2).

Moments (from Qcon):

DC=DC$_1$ +DC$_2$ negative moment:

$MDCn_{0.0} := 24736 \cdot kN \cdot m$ $\quad MDCn_{0.1} := 9715 \cdot kN \cdot m$

$$MDCn_L := \frac{(MDCn_{0.0} - MDCn_{0.1}) \cdot 1}{10} + MDCn_{0.1} \qquad MDCn_L = 11217.1 \cdot kN \cdot m$$

DC$_1$ negative moment:

$MDC1n_{0.0} := 22624 \cdot kN \cdot m$ $\quad MDC1n_{0.1} := 8886 \cdot kN \cdot m$

$$MDC1n_L := \frac{(MDC1n_{0.0} - MDC1n_{0.1}) \cdot 1}{10} + MDC1n_{0.1} \qquad MDC1n_L = 10259.8 \cdot kN \cdot m$$

DC$_2$ negative moment:

$MDC2n_{0.0} := 2112 \cdot kN \cdot m$ $\quad MDC2n_{0.1} := 829.5 \cdot kN \cdot m$

$$MDC2n_L := \frac{(MDC2n_{0.0} - MDC2n_{0.1}) \cdot 1}{10} + MDC2n_{0.1} \qquad MDC2n_L = 957.75 \cdot kN \cdot m$$

DW negative moment:

$MDWn_{0.0} := 2334 \cdot kN \cdot m$ $\quad MDWn_{0.1} := 916.8 \cdot kN \cdot m$

$$MDWn_L := \frac{(MDWn_{0.0} - MDWn_{0.1}) \cdot 1}{10} + MDWn_{0.1} \qquad MDWn_L = 1058.52 \cdot kN \cdot m$$

LL + Impact negative moment:
LL = (Dual Truck Train x Impact) + Lane
Impact = 1.33

$MLLn_{0.0} := 13446 \cdot kN \cdot m$ $\quad MLLn_{0.1} := 6222 \cdot kN \cdot m$

$$MLLn_L := \frac{(MLLn_{0.0} - MLLn_{0.1}) \cdot 1}{10} + MLLn_{0.1} \qquad MLLn_L = 6944.4 \cdot kN \cdot m$$

STRENGTH I.

Maximum negative moment for Strength I Limit State:

$$\eta 1 \Sigma \gamma i MSTn_L := \gamma 1_{DC} \cdot MDCn_L + \gamma 1_{DW} \cdot MDWn_L + \gamma 1_{LL} \cdot DFM1_{int} \cdot MLLn_L$$

$$\eta 1 \Sigma \gamma i MSTn_L = 25058.1065 \cdot kN \cdot m$$

SECTION DESIGN:

Location of the plastic neutral axis (PNA).

$\Sigma An_s = 101700 \cdot mm^2$ $\quad bn_{eff} = 2985 \cdot mm$ $\quad T_c = 230 \cdot mm$ $\quad tn_h = 91.2 \cdot mm$

$F_y = 345 \cdot MPa$ $\quad f_c = 28 \cdot MPa$ $\quad f_y = 420 \cdot MPa$

a.) Top flange:

$tn_{tf} = 38 \cdot mm$

$bn_{tf} = 450 \cdot mm$

b.) Bottom flange:

$tn_{bf} = 66 \cdot mm$

$bn_{bf} = 600 \cdot mm$

c.) Web:

$tn_w = 18 \cdot mm$

$hn_w = 2500 \cdot mm$

Plastic forces:

Reinforcement (assuming deck reinforcement area = 1% of deck area)

Top reinforcement: $P_{rt} := f_y \cdot bn_{eff} \cdot T_c \cdot 0.0067$ $\quad P_{rt} = 1931.9517 \cdot kN$

Bottom reinforcement: $P_{rb} := f_y \cdot bn_{eff} \cdot T_c \cdot 0.0033$ $\quad P_{rb} = 951.5583 \cdot kN$

Tension flange: $Pn_t := F_y \cdot bn_{tf} \cdot tn_{tf}$ $\quad Pn_t = 5899.5 \cdot kN$

Web: $Pn_w := F_y \cdot hn_w \cdot tn_w$ $\quad Pn_w = 15525 \cdot kN$

Compression flange: $Pn_c := F_y \cdot bn_{bf} \cdot tn_{bf}$ $\quad Pn_c = 13662 \cdot kN$

$Pn_w + Pn_c = 29187 \cdot kN$ $\qquad Pn_t + P_{rt} + P_{rb} = 8783 \cdot kN$

$Pn_w + Pn_c \geq Pn_t + P_{rt} + P_{rb}$ PNA in web

Calculation of distance Yn_{PNA} from bottom of top tension flange to PNA:

$$Yn_{PNA} := \begin{cases} \left[\frac{hn_w}{2} \cdot \left(\frac{Pn_c - Pn_t - P_{rt} - P_{rb}}{Pn_w} + 1\right)\right] & \text{if } Pn_c + Pn_w \geq Pn_t + P_{rb} + P_{rt} \quad \text{PNA in web} \\ \left[\frac{tn_{tf}}{2} \cdot \left(\frac{Pn_w + Pn_c - P_{rt} - P_{rb}}{Pn_t} + 1\right)\right] & \text{otherwise} \quad \text{PNA in top flange} \end{cases}$$

PNA in web: $\quad Yn_{PNA} = 1642.8333 \cdot mm$

Calculation of plastic moment capacity (Mn_p).

$tn_h = 0.0912 \cdot m$ $CL_{rt} := 50 \cdot mm$ $CL_{rb} := 25 \cdot mm$ $DIA_{rt} := 15.9 \cdot mm$ $DIA_{rb} := 15.9 \cdot mm$

Distance from P_{rt} to PNA: $dn_{rt} := T_c - \left(CL_{rt} + \frac{DIA_{rt}}{2}\right) + tn_h + tn_{tf} + Yn_{PNA}$ $dn_{rt} = 1944.1 \cdot mm$

Distance from P_{rb} to PNA: $dn_{rb} := CL_{rb} + \frac{DIA_{rb}}{2} + tn_h + Yn_{PNA}$ $dn_{rb} = 1767 \cdot mm$

Distance from P_t to PNA: $dn_t := \frac{tn_{tf}}{2} + Yn_{PNA}$ $dn_t = 1661.8 \cdot mm$

Distance from P_w to PNA: $dn_w := Yn_{PNA} - \frac{hn_w}{2}$ $dn_w = 392.8 \cdot mm$

Distance from P_c to PNA: $dn_c := \left(hn_w + \frac{tn_{bf}}{2}\right) - Yn_{PNA}$ $dn_c = 890.2 \cdot mm$

$$Mn_p := \frac{Pn_w}{2 \cdot hn_w} \cdot \left[Yn_{PNA}^2 + \left(hn_w - Yn_{PNA}\right)^2\right] + \left(Pn_c \cdot dn_c + P_{rt} \cdot dn_{rt} + P_{rb} \cdot dn_{rb} + Pn_t \cdot dn_t\right)$$

$Mn_p = 38064.1455 \cdot kN \cdot m$

Check if the section qualifies as a compact section.

Web slenderness requirement for compact section: $\frac{2 \cdot Dn_{cp}}{tn_w} \le 3.76 \cdot \sqrt{\frac{E_s}{F_y}}$

Depth of the web in compression at the plastic moment - Dn_{cp}

Depth of web in compression at the plastic moment for the section in negative flexure with PNA in the web:

$$Dn_{cp} := \frac{hn_w}{2 \cdot hn_w \cdot tn_w \cdot F_y} \cdot \left(F_y \cdot tn_{tf} \cdot bn_{tf} + F_y \cdot hn_w \cdot tn_w + f_y \cdot bn_{eff} T_c \cdot 0.01 - F_y \cdot tn_{bf} \cdot bn_{bf}\right)$$

$Dn_{cp} = 857.1667 \cdot mm$

$$\frac{2 \cdot Dn_{cp}}{tn_w} = 95.2407 \quad > \quad 3.76 \cdot \sqrt{\frac{E_s}{F_y}} = 90.5302$$

Requirement is not satisfied - section non-compact.

Section proportions requirement:

$$0.1 \le \frac{In_{yc}}{In_y} \le 0.9$$

Moment of interia of the steel section about the vertical axis in the plane of the web in [mm^4]:

$$In_y := \frac{tn_{bf} \cdot bn_{bf}^3}{12} + \frac{hn_w \cdot tn_w^3}{12} + \frac{tn_{tf} \cdot bn_{tf}^3}{12} \qquad In_y = 1.4778 \cdot 10^9 \cdot mm^4$$

Moment of interia of the compression flange of the steel section about the vertical axis in the plane of the web in [mm^4]:

$$In_{yc} := \frac{tn_{tf} \cdot bn_{tf}^3}{12} \qquad In_{yc} = 288562500 \cdot mm^4$$

$$0.1 < \frac{In_{yc}}{In_y} = 0.1953 < 0.9$$

Web slenderness requirement for non-compact section.

$$\frac{2 \cdot Dn_c}{tn_w} \le 6.77 \cdot \sqrt{\frac{E_s}{fn_c}}$$

fn_c - stress in the compression flange due to factored loading [MPa]:

$$fn_{cDC1} := \frac{\eta 1 \cdot \gamma 1_{DC} \cdot MDC1n_L}{Sn_{bot}} \qquad fn_{cDC1} = 122.4609 \cdot MPa$$

$$fn_{cDC2} := \frac{\eta 1 \cdot \gamma 1_{DC} \cdot MDC2n_L}{Sn_{botr}} \qquad fn_{cDC2} = 10.7494 \cdot MPa$$

$$fn_{cDW} := \frac{\eta 1 \cdot \gamma 1_{DW} \cdot MDWn_L}{Sn_{botr}} \qquad fn_{cDW} = 14.2564 \cdot MPa$$

$$fn_{cLL} := \frac{\eta 1 \cdot \gamma 1_{LL} \cdot DFM1_{int} \cdot MLLn_L}{Sn_{botr}} \qquad fn_{cLL} = 84.8408 \cdot MPa$$

$$fn_c := fn_{cDC1} + fn_{cDC2} + fn_{cDW} + fn_{cLL} \qquad fn_c = 232.3075 \cdot MPa$$

Dn_c - depth of the web in compression in the elastic range: $Dn_c := Yn_{sbr} - tn_{bf}$

$$Dn_c = 1079.7535 \cdot mm$$

$$\frac{2 \cdot Dn_c}{tn_w} = 119.9726 < 6.77 \cdot \sqrt{\frac{E_s}{fn_c}} = 198.6425$$

Web slenderness requirement satisfied

Compression flange slenderness requirement for non-compact section.

$$\frac{bn_{bf}}{2 \cdot tn_{bf}} \le 1.38 \cdot \sqrt{\frac{E_s}{fn_c \cdot \sqrt{\frac{2 \cdot Dn_c}{tn_w}}}}$$

$$\frac{bn_{bf}}{2 \cdot tn_{bf}} = 4.5455 \qquad < \qquad 1.38 \cdot \sqrt{\frac{E_s}{fn_c \cdot \sqrt{\frac{2 \cdot Dn_c}{tn_w}}}} = 12.2347$$

Compression flange slenderness requirement satisfied

Compression flange bracing requirement for non-compact section.

L_b - distance between points bracing the compression flange [mm] (assumed $L_b := 6800 \cdot mm$):

$F_{yc} := F_y \qquad F_{yc} = 345 \cdot MPa$

r_t - minimum radius of gyration of the compression flange of the steel section plus one-third of the web in compression taken about the vertical axis

$bn_{bf} = 600 \cdot mm \qquad tn_{bf} = 66 \cdot mm \qquad tn_w = 18 \cdot mm \qquad Dn_c = 1079.7535 \cdot mm$

$$I_t := \frac{bn_{bf}^3 \cdot tn_{bf}}{12} + \frac{tn_w^3 \cdot \frac{Dn_c}{3}}{12} \qquad A_t := bn_{bf} \cdot tn_{bf} + tn_w \cdot \frac{Dn_c}{3} \qquad r_t := \sqrt{\frac{I_t}{A_t}}$$

$I_t = 1.1882 \cdot 10^9 \cdot mm^4 \qquad A_t = 46078.5208 \cdot mm^2 \qquad r_t = 160.5798 \cdot mm$

$$L_b \le 1.76 \cdot r_t \cdot \sqrt{\frac{E_s}{F_{yc}}}$$

$$L_b = 6800 \cdot mm \qquad < \qquad 1.76 \cdot r_t \cdot \sqrt{\frac{E_s}{F_{yc}}} = 6804.701 \cdot mm$$

Compression flange slenderness requirement satisfied

Nominal flexural resistance.

For non-compact sections, a nominal flexural resistance is computed for each flange. Nominal flexural resistance of each flange in terms of stress Fn

Compression flange:

$R_{hc} := 1$ - flange stress-reduction factor (equal to 1 for homogenous sections)

For members with compression flange area equal or greater than the tension flange $\lambda_b = 5.76$.

For members with compression flange area less than the tension flange $\lambda_b = 4.64$.

$$\lambda_b := \begin{cases} 5.76 & \text{if } tn_{bf} \cdot bn_{bf} \geq tn_{tf} \cdot bn_{tf} \\ 4.64 & \text{otherwise} \end{cases} \qquad \lambda_b = 5.76$$

$$\frac{2 \cdot Dn_c}{tn_w} \leq \lambda_b \cdot \sqrt{\frac{E_s}{fn_c}}$$

$$\frac{2 \cdot Dn_c}{tn_w} = 119.9726 < \lambda_b \cdot \sqrt{\frac{E_s}{fn_c}} = 169.0075$$

Therefore: $R_{bc} := 1$

$$F_{nc} := R_{bc} \cdot R_{hc} \cdot F_{yc} \qquad F_{nc} = 345 \cdot MPa$$

Tension flange:

$R_{ht} := 1$ $\quad R_{bt} := 1$ $\quad F_{yt} := F_y$ $\quad F_{nt} := R_{bt} \cdot R_{ht} \cdot F_{yt}$ $\quad F_{nt} = 345 \cdot MPa$

Strength limit state for flexure.

Checking composite non-compacted section for the strength limit state is to compare the sum of the stresses in each flange due to the factored loads (Fu) to the factored flexural resistance of the flange expressed in terms of stress.

Compression flange:

$\eta \Sigma \gamma_i fc_i = fn_c$ - stress in the compression flange due to factored loading [MPa]:

$\phi_f := 1$ $\quad fn_c = 232.3075 \cdot MPa$ $\quad fn_c \leq \phi_f F_{nc}$

$$fn_c = 232.3075 \cdot MPa < \phi_f F_{nc} = 345 \cdot MPa$$

Compression flange satisfies the srtength I limit state for flexure

Tension flange:

$\eta\Sigma\gamma_i ft_i = fn_t$ - stress in the tension flange due to factored loading [MPa]:

$$fn_t \le \phi_f F_{nt}$$

$$fn_{tDC1} := \frac{\eta 1 \cdot \gamma 1_{DC} \cdot MDC1n_L}{Sn_{top}} \qquad fn_{tDC1} = 187.2004 \cdot MPa$$

$$fn_{tDC2} := \frac{\eta 1 \cdot \gamma 1_{DC} \cdot MDC2n_L}{Sn_{topr}} \qquad fn_{tDC2} = 14.7691 \cdot MPa$$

$$fn_{tDW} := \frac{\eta 1 \cdot \gamma 1_{DW} \cdot MDWn_L}{Sn_{topr}} \qquad fn_{tDW} = 19.5876 \cdot MPa$$

$$fn_{tLL} := \frac{\eta 1 \cdot \gamma 1_{LL} \cdot DFM1_{int} \cdot MLLn_L}{Sn_{topr}} \qquad fn_{tLL} = 116.5667 \cdot MPa$$

$$fn_t := fn_{tDC1} + fn_{tDC2} + fn_{tDW} + fn_{tLL} \qquad fn_t = 338.1237 \cdot MPa$$

$$fn_t = 338.1237 \cdot MPa \quad < \quad \phi_f F_{nt} = 345 \cdot MPa$$

Tension flange satisfiesthe srtength I limit state for flexure

$$DIFFRENCE := \phi_f F_{nt} - fn_t \qquad DIFFRENCE = 6.8763 \cdot MPa$$

$$\%DIFFRENCE := \frac{DIFFRENCE \cdot 100}{\phi_f F_{nt}} \qquad \%DIFFRENCE = 1.9931$$

THREE-SPAN, CONTINUOUS PLATE GIRDER BRIDGE SUMMARY

1. CONSTANTS AND UNITS:

Acceleration of gravity constant $g = 9.8066 \cdot m \cdot sec^{-2}$

$ft := 12 \cdot in$

$in := 25.4 \cdot mm$ $\quad ft = 0.3048 \cdot m$

$lbm := 0.4536 \cdot kg$

$lb := 0.4536 \cdot kg \cdot g$ $\quad lb = 4.4483 \cdot newton$

$kN := 1000 \cdot newton$ $\quad kPa := 1000 \cdot Pa$ $\quad MPa := 1000000 \cdot Pa$

$\frac{lb}{in^2} = 6894.8733 \cdot Pa$ $\quad \frac{lb}{in^2} = 6.8949 \cdot kPa$

2. GIVEN REQUIREMENTS:

Number of girders: $N_g := 4$

Number of spans: $N_{sp} := 3$

Length of middle span: $L_2 := 100.0 \cdot m$

Length of side span (equal length): $L_1 := 65.0 \cdot m$ $\quad L_3 := 65 \cdot m$

Girder spacing: $GS := 3.7 \cdot m$

Roadway width: $RW := 12.6 \cdot m$

Concrete deck thickness (structural): $T_c := 0.23 \cdot m$

Concrete deck overhang: $OH_c := 1.15 \cdot m$

Sidewalk: NONE

Haunch thickness: $t_h := 3 \cdot in$ $\quad t_h = 0.0762 \cdot m$

3. INTERIOR GIRDER STEEL VOLUME:

Web volume (total):

web hight: $h_w := 2500 \cdot mm$ web thickness: $t_w := 18 \cdot mm$

$WEB := h_w \cdot t_w \cdot (2 \cdot L_1 + L_2)$ $WEB = 10.35 \cdot m^3$

Flanges volume:

Top and bottom flanges between point A and A (max positive flexure - span 2):

$FL_{max} := (53 \cdot mm \cdot 450 \cdot mm + 73 \cdot mm \cdot 450 \cdot mm) \cdot 33000 \cdot mm$

$FL_{max} = 1.8711 \cdot m^3$

Top and bottom flanges between points A and B (positive flexure - span 2):

$FL_A := (45 \cdot mm \cdot 450 \cdot mm + 56 \cdot mm \cdot 450 \cdot mm) \cdot 2 \cdot 15000 \cdot mm$

$FL_A = 1.3635 \cdot m^3$

Top and bottom flanges between points E and N (positive flexure - span 1 and 3):

$FL_{span1} := (25 \cdot mm \cdot 350 \cdot mm + 35 \cdot mm \cdot 500 \cdot mm) \cdot 2 \cdot 28500 \cdot mm$

$FL_{span1} = 1.4963 \cdot m^3$

Top and bottom flanges (positive flexure between point E and ext. support - span 1 and 3):

$FL_E := (20 \cdot mm \cdot 300 \cdot mm + 25 \cdot mm \cdot 450 \cdot mm) \cdot 2 \cdot 13500 \cdot mm$

$FL_E = 0.4658 \cdot m^3$

Top and bottom flanges between points N and K (negative flexure in span 1 and 3):

$FL_M := (55 \cdot mm \cdot 600 \cdot mm + 75 \cdot mm \cdot 600 \cdot mm) \cdot 2 \cdot 16800 \cdot mm$

$FL_M = 2.6208 \cdot m^3$

Top and bottom flanges between points K and L (negative flexure in span 1, 2 and 3):

$FL_K := (90 \cdot mm \cdot 600 \cdot mm + 90 \cdot mm \cdot 600 \cdot mm) \cdot 2 \cdot 15200 \cdot mm$

$FL_K = 3.2832 \cdot m^3$

Top and bottom flanges between points L and B (negative flexure in span 2):

$FL_L := (38 \cdot mm \cdot 450 \cdot mm + 66 \cdot mm \cdot 600 \cdot mm) \cdot 2 \cdot 9500 \cdot mm$

$FL_L = 1.0773 \cdot m^3$

Top and bottom flanges (total volume):

$$FL := FL_{max} + FL_A + FL_{span1} + FL_E + FL_M + FL_K + FL_L$$
$$FL = 12.1779 \cdot m^3$$

Top and bottom flanges weight :

$$\gamma_s := 7850 \cdot \frac{kg}{m^3}$$

$FLW := FL \cdot \gamma_s$ $\qquad$ $FLW = 95596.515 \cdot kg$

Web weight :

$WEBW := WEB \cdot \gamma_s$ $\qquad$ $WEBW = 81247.5 \cdot kg$

Total steel weight of one interior girder:

$STEEL := WEBW + FLW$ $\qquad$ $STEEL = 176844.015 \cdot kg$

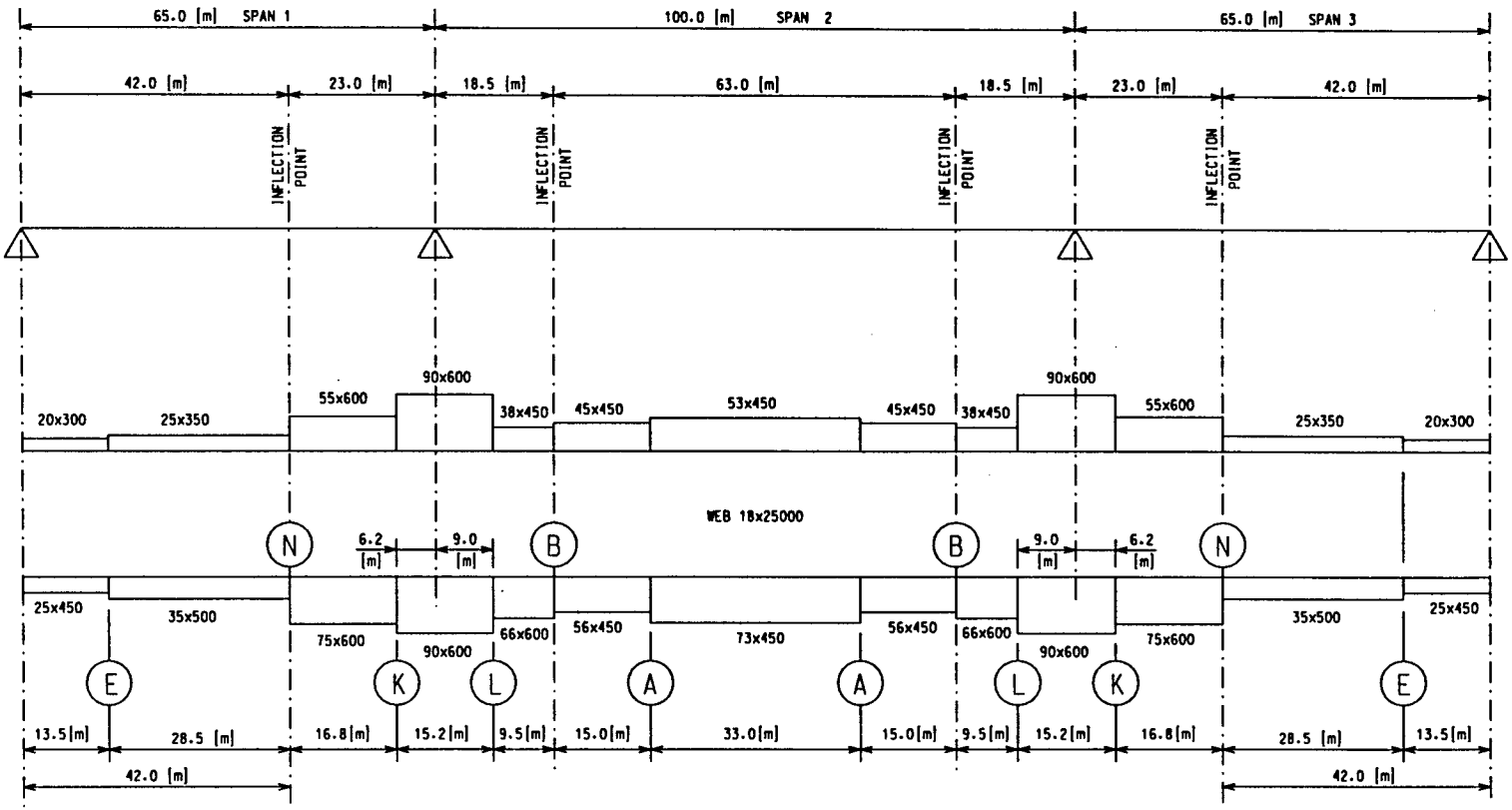

NOTE:

PLATE SIZES IN MILIMETERS.

Appendix E

Double Composite Plate Girder Bridge Design Calculations

COMPOSITE STEEL GIRDER BRIDGE - USF STUDY

MATERIAL PROPERTIES

Steel Modulus of Elasticity =	200000	MPa
Concrete Modulus of Elasticity =	30	MPa
Density of Steel =	77000	N/m3
Density of Concrete =	23600	N/m3
Short Term Modular Ratio =	8	
Long Term Modular Ratio =	24	
Top Flange Steel Yield Stress =	345	MPa
Web Steel Yield Stress =	345	MPa
Bottom Web Steel Yield Stress =	345	MPa
Reinforcement Yield Stress =	420	MPa
Concrete Strength =	30	MPa

ADDITIONAL LOADING REQUIREMENTS

Stay in Place Forms =	1000	N/m2
Future Wearing Surface =	1000	N/m2
Traffic Barries (each) =	5700	N/m

Additional Loads per Girder

Stay in Place Forms =	6166	N/m
Future Wearing Surface =	6166	N/m
Traffic Barries =	5700	N/m

Design Requirements

b =	0.7	

GIRDER INFORMATION

Number of Lanes =	3			
Number of Girders =	2			
Spacing Between Girders =	3657.6	mm		
Bridge Roadway Width =	12331.2	mm		
Top Slab Thickness =	228.6	mm		
Bottom Slab Thickness =	177.8	mm		
Number of Spans =	3			
Span Length 1 =	65	m	L1 =	41.577
Span Length 2 =	100	m	L2 =	
Span Length 3 =	65	m	L3 =	
Width of OverHang =	1219.2	mm		

DOUBLE COMPOSITE STEEL GIRDER BRIDGE DESIGN

		SPAN 1				SPAN 2							SPAN 3				
Section Length, m		13.5	37.8	7.5	6.2	9	10.5	15	31	15	10.5	9	6.2	7.5	37.8	13.5	
Section Start, m		0.0	13.5	51.3	58.8	0.0	9.0	19.5	34.5	65.5	80.5	91.0	0.0	6.2	13.7	51.5	
Section End, m		13.5	51.3	58.8	65.0	9.0	19.5	34.5	65.5	80.5	91.0	100.0	6.2	13.7	51.5	65.0	
Steel Girder																	
Top Flange Thickness, t_{tf}	mm	20	50	60	85	85	35	22	25	22	35	85	85	60	50	20	
Top Flange Width, b_{tf}	mm	360	360	600	600	600	600	450	450	450	600	600	600	600	360	360	
Web Thickness, t_w	mm	18	18	18	18	18	18	18	18	18	18	18	18	18	18	18	
Web Depth, d_w	mm	2500	2500	2500	2500	2500	2500	2500	2500	2500	2500	2500	2500	2500	2500	2500	
Bottom Flange Thickness, t_{bf}	mm	20	50	58	82	82	40	36	55	36	40	82	82	58	50	20	
Bottom Flange Width, b_{bf}	mm	360	450	600	600	600	600	450	450	450	600	600	600	600	450	360	
A_{girder} =	mm^2	59,400	85,500	115,800	145,200	145,200	90,000	71,100	81,000	71,100	90,000	145,200	145,200	115,800	85,500	59,400	
$y_{cg\ girder}$ =	mm	0.00	-67.11	13.56	16.53	16.53	-42.92	-113.33	-215.00	-113.33	-42.92	16.53	16.53	13.56	-67.11	0.00	
$I_{cg\ girder}$ =	mm^4	4.630E+10	8.890E+10	1.393E+11	1.907E+11	1.907E+11	9.572E+10	6.432E+10	7.802E+10	6.432E+10	9.572E+10	1.907E+11	1.907E+11	1.393E+11	8.890E+10	4.630E+10	
Concrete Slabs																	
Top Concrete Slab																	
Distance Top of Web/Concrete Bottom	mm	85	85	85	85	85	85	85	85	85	85	85	85	85	85	85	
Effective Slab Width, b_{ts}	mm	2923.2	2923.2	3043.2	3043.2	3043.2	3043.2	2968.2	2968.2	2968.2	3043.2	3043.2	3043.2	3043.2	2923.2	2923.2	
Slab Thickness, t_{ts}	mm	228.6	228.6	228.6	228.6	228.6	228.6	228.6	228.6	228.6	228.6	228.6	228.6	228.6	228.6	228.6	
$A_{top\ slab}$ =	mm^2	668,244	668,244	695,676	695,676	695,676	695,676	678,531	678,531	678,531	695,676	695,676	695,676	695,676	668,244	668,244	
$y_{cg\ top\ slab}$ =	mm	1449.3	1449.3	1449.3	1449.3	1449.3	1449.3	1449.3	1449.3	1449.3	1449.3	1449.3	1449.3	1449.3	1449.3	1449.3	
$I_{cg\ top\ slab}$ =	mm^4	2.910E+09	2.910E+09	3.030E+09	3.030E+09	3.030E+09	3.030E+09	2.955E+09	2.955E+09	2.955E+09	3.030E+09	3.030E+09	3.030E+09	3.030E+09	2.910E+09	2.910E+09	
Top Concrete Slab Reinforcement																	
Reinforcement Area	% concrete	1.00%	1.00%	1.00%	1.00%	1.00%	1.00%	1.00%	1.00%	1.00%	1.00%	1.00%	1.00%	1.00%	1.00%	1.00%	
Top Layer Reinforcement	% steel	2/3	2/3	2/3	2/3	2/3	2/3	2/3	2/3	2/3	2/3	2/3	2/3	2/3	2/3	2/3	
Bottom Layer Reinforcement	% steel	1/3	1/3	1/3	1/3	1/3	1/3	1/3	1/3	1/3	1/3	1/3	1/3	1/3	1/3	1/3	
Distance Top of Slab/CG Top Rebar	mm	76.2	76.2	76.2	76.2	76.2	76.2	76.2	76.2	76.2	76.2	76.2	76.2	76.2	76.2	76.2	
Distance Top of Slab/CG Bottom Rebar	mm	152.4	152.4	152.4	152.4	152.4	152.4	152.4	152.4	152.4	152.4	152.4	152.4	152.4	152.4	152.4	
A_{rebar} =	mm^2	6,682	6,682	6,957	6,957	6,957	6,957	6,785	6,785	6,785	6,957	6,957	6,957	6,957	6,682	6,682	
$y_{cg\ rebar}$ =	mm	1,462.0	1,462.0	1,462.0	1,462.0	1,462.0	1,462.0	1,462.0	1,462.0	1,462.0	1,462.0	1,462.0	1,462.0	1,462.0	1,462.0	1,462.0	
Bottom Concrete Slab																	
Include Bottom Concrete Slab in Section?	Y or N	N	N	Y	Y	Y	Y	N	N	N	Y	Y	Y	Y	N	N	
Distance Bottom of Web/Concrete Bottom	mm	0	0	0	0	0	0	0	0	0	0	0	0	0	0	0	
Effective Slab Width, b_{bs}	mm	0	0	2162.6	2174.6	2174.6	2153.6	0	0	0	2153.6	2174.6	2174.6	2162.6	0	0	
Slab Thickness, t_{bs}	mm	0	0	177.8	177.8	177.8	177.8	0	0	0	177.8	177.8	177.8	177.8	0	0	
$A_{bot\ slab}$ =	mm^2	0	0	384,510	386,644	386,644	382,910	0	0	0	382,910	386,644	386,644	384,510	0	0	
$y_{cg\ bot\ slab}$ =	mm	-1,250.0	-1,250.0	-1,161.1	-1,161.1	-1,161.1	-1,161.1	-1,250.0	-1,250.0	-1,250.0	-1,161.1	-1,161.1	-1,161.1	-1,161.1	-1,250.0	-1,250.0	
$I_{cg\ bot\ slab}$ =	mm^4	0.000E+00	0.000E+00	1.013E+09	1.019E+09	1.019E+09	1.009E+09	0.000E+00	0.000E+00	0.000E+00	1.009E+09	1.019E+09	1.019E+09	1.013E+09	0.000E+00	0.000E+00	
Steel Weight per Section																	
Top Flange	kg	763	5341	2119	2482	3603	1731	1166	2737	1166	1731	3603	2482	2119	5341	763	37145
Web	kg	4768	13351	2649	2190	3179	3709	5298	10950	5298	3709	3179	2190	2649	13351	4768	81239
Bot Flange	kg	763	6676	2049	2394	3476	1978	1907	6022	1907	1978	3476	2394	2049	6676	763	44507
Total		6294	25368	6817	7066	10257	7417	8371	19709	8371	7417	10257	7066	6817	25368	6294	162891

ELASTIC SECTION PROPERTIES AND LOADING CONDITIONS

1. Section: Steel Girder - Loading: DC_0 (Steel Girder+Bottom Slab w/ Forms)																	
Loading	w_{girder} =	N/m	4,574	6,584	8,917	11,181	11,181	6,930	5,475	6,237	5,475	6,930	11,181	11,181	8,917	6,584	4,574
	$w_{bot\ slab}$ =	N/m	0	0	19,006	19,006	19,006	19,006	0	0	0	19,006	19,006	19,006	19,006	0	0
	w_{DC0} =	N/m	4,574	6,584	27,923	30,187	30,187	25,936	5,475	6,237	5,475	25,936	30,187	30,187	27,923	6,584	4,574
Total Section Possitive Flexure & Negative Flexure	A =	mm^2	59,400	85,500	115,800	145,200	145,200	90,000	71,100	81,000	71,100	90,000	145,200	145,200	115,800	85,500	59,400
	d_s =	mm	0.00	-67.11	13.56	16.53	16.53	-42.92	-113.33	-215.00	-113.33	-42.92	16.53	16.53	13.56	-67.11	0.00
	I_{NA} =	mm^4	4.630E+10	8.890E+10	1.393E+11	1.907E+11	1.907E+11	9.572E+10	6.432E+10	7.802E+10	6.432E+10	9.572E+10	1.907E+11	1.907E+11	1.393E+11	8.890E+10	4.630E+10
	$d_{TOP\ OF\ STEEL}$ =	mm	1,270.0	1,367.1	1,296.4	1,318.5	1,318.5	1,327.9	1,385.3	1,490.0	1,385.3	1,327.9	1,318.5	1,318.5	1,296.4	1,367.1	1,270.0
	$d_{BOT\ OF\ STEEL}$ =	mm	1,270.0	1,232.9	1,321.6	1,348.5	1,348.5	1,247.1	1,172.7	1,090.0	1,172.7	1,247.1	1,348.5	1,348.5	1,321.6	1,232.9	1,270.0
	$S_{TOP\ OF\ STEEL}$ =	mm^3	3.646E+07	6.503E+07	1.075E+08	1.446E+08	1.446E+08	7.209E+07	4.643E+07	5.236E+07	4.643E+07	7.209E+07	1.446E+08	1.446E+08	1.075E+08	6.503E+07	3.646E+07
	$S_{BOT\ OF\ STEEL}$ =	mm^3	3.646E+07	7.211E+07	1.054E+08	1.414E+08	1.414E+08	7.676E+07	5.485E+07	7.158E+07	5.485E+07	7.676E+07	1.414E+08	1.414E+08	1.054E+08	7.211E+07	3.646E+07
2. Section: Steel Girder + Bottom Slab/3n - Loading: DC_1 (Top Slab w/ Forms)																	
Loading	w_{DC1} =	N/m	23,391	23,391	23,391	23,391	23,391	23,391	23,391	23,391	23,391	23,391	23,391	23,391	23,391	23,391	23,391
Total Section	A =	mm^2	59,400	85,500	131,821	161,310	161,310	105,955	71,100	81,000	71,100	105,955	161,310	161,310	131,821	85,500	59,400
	d_s =	mm	0.00	-67.11	-129.20	-101.08	-101.08	-211.29	-113.33	-215.00	-113.33	-211.29	-101.08	-101.08	-129.20	-67.11	0.00
	I_{NA} =	mm^4	4.630E+10	8.890E+10	1.588E+11	2.108E+11	2.108E+11	1.127E+11	6.432E+10	7.802E+10	6.432E+10	1.127E+11	2.108E+11	2.108E+11	1.588E+11	8.890E+10	4.630E+10
Possitive Flexure: Steel Girder	A =	mm^2	59,400	85,500	115,800	145,200	145,200	90,000	71,100	81,000	71,100	90,000	145,200	145,200	115,800	85,500	59,400
	d_s =	mm	0.00	-67.11	13.56	16.53	16.53	-42.92	-113.33	-215.00	-113.33	-42.92	16.53	16.53	13.56	-67.11	0.00
	I_{NA} =	mm^4	4.63E+10	8.89E+10	1.39E+11	1.91E+11	1.91E+11	9.57E+10	6.43E+10	7.80E+10	6.43E+10	9.57E+10	1.91E+11	1.91E+11	1.39E+11	8.89E+10	4.63E+10
	$d_{TOP\ OF\ STEEL}$ =	mm	1,270.0	1,367.1	1,296.4	1,318.5	1,318.5	1,327.9	1,385.3	1,490.0	1,385.3	1,327.9	1,318.5	1,318.5	1,296.4	1,367.1	1,270.0
	$d_{BOT\ OF\ STEEL}$ =	mm	1,270.0	1,232.9	1,321.6	1,348.5	1,348.5	1,247.1	1,172.7	1,090.0	1,172.7	1,247.1	1,348.5	1,348.5	1,321.6	1,232.9	1,270.0
	$S_{TOP\ OF\ STEEL}$ =	mm^3	3.646E+07	6.503E+07	1.075E+08	1.446E+08	1.446E+08	7.209E+07	4.643E+07	5.236E+07	4.643E+07	7.209E+07	1.446E+08	1.446E+08	1.075E+08	6.503E+07	3.646E+07
	$S_{BOT\ OF\ STEEL}$ =	mm^3	3.646E+07	7.211E+07	1.054E+08	1.414E+08	1.414E+08	7.676E+07	5.485E+07	7.158E+07	5.485E+07	7.676E+07	1.414E+08	1.414E+08	1.054E+08	7.211E+07	3.646E+07
Negative Flexure: Steel Girder + Bottom Slab/3n	A =	mm^2	59,400	85,500	131,821	161,310	161,310	105,955	71,100	81,000	71,100	105,955	161,310	161,310	131,821	85,500	59,400
	d_s =	mm	0.00	-67.11	-129.20	-101.08	-101.08	-211.29	-113.33	-215.00	-113.33	-211.29	-101.08	-101.08	-129.20	-67.11	0.00
	I_{NA} =	mm^4	4.630E+10	8.890E+10	1.588E+11	2.108E+11	2.108E+11	1.127E+11	6.432E+10	7.802E+10	6.432E+10	1.127E+11	2.108E+11	2.108E+11	1.588E+11	8.890E+10	4.630E+10
	$d_{TOP\ OF\ STEEL}$ =	mm	1,270.0	1,367.1	1,439.2	1,436.1	1,436.1	1,496.3	1,385.3	1,490.0	1,385.3	1,496.3	1,436.1	1,436.1	1,439.2	1,367.1	1,270.0
	$d_{BOT\ OF\ STEEL}$ =	mm	1,270.0	1,232.9	1,178.8	1,230.9	1,230.9	1,078.7	1,172.7	1,090.0	1,172.7	1,078.7	1,230.9	1,230.9	1,178.8	1,232.9	1,270.0
	$S_{TOP\ OF\ STEEL}$ =	mm^3	3.646E+07	6.503E+07	1.103E+08	1.468E+08	1.468E+08	7.533E+07	4.643E+07	5.236E+07	4.643E+07	7.533E+07	1.468E+08	1.468E+08	1.103E+08	6.503E+07	3.646E+07
	$S_{BOT\ OF\ STEEL}$ =	mm^3	3.646E+07	7.211E+07	1.347E+08	1.713E+08	1.713E+08	1.045E+08	5.485E+07	7.158E+07	5.485E+07	1.045E+08	1.713E+08	1.713E+08	1.347E+08	7.211E+07	3.646E+07
3. Section: Steel Section + Bottom Slab/3n + Top Slab/3n + Top Slab Longitudinal Reinforcement - Loading: DC_2 (Barries) & DW (Wearing Surface)																	
Loading	w_{DC2} =	N/m	2,850	2,850	2,850	2,850	2,850	2,850	2,850	2,850	2,850	2,850	2,850	2,850	2,850	2,850	2,850
	w_{DW} =	N/m	3,083	3,083	3,083	3,083	3,083	3,083	3,083	3,083	3,083	3,083	3,083	3,083	3,083	3,083	3,083
Total Section	A =	mm^2	87,243	113,343	160,808	190,297	190,297	134,941	99,372	109,272	99,372	134,941	190,297	190,297	160,808	113,343	87,243
	d_s =	mm	462.54	305.41	155.33	135.08	135.08	145.42	331.25	215.61	331.25	145.42	135.08	135.08	155.33	305.41	462.54
	I_{NA} =	mm^4	8.624E+10	1.373E+11	2.181E+11	2.700E+11	2.700E+11	1.756E+11	1.138E+11	1.362E+11	1.138E+11	1.756E+11	2.700E+11	2.700E+11	2.181E+11	1.373E+11	8.624E+10
Possitive Flexure: Steel Girder + Top Slab/3n	A =	mm^2	87,243	113,343	144,786	174,186	174,186	118,986	99,372	109,272	99,372	118,986	174,186	174,186	144,786	113,343	87,243
	d_s =	mm	462.5	305.4	301.0	255.0	255.0	320.6	331.3	215.6	331.3	320.6	255.0	255.0	301.0	305.4	462.5
	I_{NA} =	mm^4	8.62E+10	1.37E+11	1.87E+11	2.40E+11	2.40E+11	1.45E+11	1.14E+11	1.36E+11	1.14E+11	1.45E+11	2.40E+11	2.40E+11	1.87E+11	1.37E+11	8.62E+10
	$d_{TOP\ OF\ STEEL}$ =	mm	807.5	994.6	1,009.0	1,080.0	1,080.0	964.4	940.7	1,059.4	940.7	964.4	1,080.0	1,080.0	1,009.0	994.6	807.5
	$d_{BOT\ OF\ STEEL}$ =	mm	1,732.5	1,605.4	1,609.0	1,587.0	1,587.0	1,610.6	1,617.3	1,520.6	1,617.3	1,610.6	1,587.0	1,587.0	1,609.0	1,605.4	1,732.5
	$S_{TOP\ OF\ STEEL}$ =	mm^3	1.068E+08	1.381E+08	1.856E+08	2.226E+08	2.226E+08	1.500E+08	1.210E+08	1.286E+08	1.210E+08	1.500E+08	2.226E+08	2.226E+08	1.856E+08	1.381E+08	1.068E+08
	$S_{BOT\ OF\ STEEL}$ =	mm^3	4.978E+07	8.553E+07	1.164E+08	1.515E+08	1.515E+08	8.982E+07	7.039E+07	8.957E+07	7.039E+07	8.982E+07	1.515E+08	1.515E+08	1.164E+08	8.553E+07	4.978E+07
Negative Flexure: Steel Girder + Top Slab Rebar + Bottom Slab/3n	A =	mm^2	66,082	92,182	138,778	168,267	168,267	112,911	77,885	87,785	77,885	112,911	168,267	168,267	138,778	92,182	66,082
	d_s =	mm	147.84	43.74	-49.44	-36.46	-36.46	-108.20	23.91	-85.38	23.91	-108.20	-36.46	-36.46	-49.44	43.74	147.84
	I_{NA} =	mm^4	5.914E+10	1.034E+11	1.755E+11	2.271E+11	2.271E+11	1.310E+11	7.969E+10	9.563E+10	7.969E+10	1.310E+11	2.271E+11	2.271E+11	1.755E+11	1.034E+11	5.914E+10
	$d_{TOP\ OF\ STEEL}$ =	mm	1,122.2	1,256.3	1,359.4	1,371.5	1,371.5	1,393.2	1,248.1	1,360.4	1,248.1	1,393.2	1,371.5	1,371.5	1,359.4	1,256.3	1,122.2
	$d_{BOT\ OF\ STEEL}$ =	mm	1,417.8	1,343.7	1,258.6	1,295.5	1,295.5	1,181.8	1,309.9	1,219.6	1,309.9	1,181.8	1,295.5	1,295.5	1,258.6	1,343.7	1,417.8
	$S_{TOP\ OF\ STEEL}$ =	mm^3	5.270E+07	8.230E+07	1.291E+08	1.656E+08	1.656E+08	9.402E+07	6.385E+07	7.030E+07	6.385E+07	9.402E+07	1.656E+08	1.656E+08	1.291E+08	8.230E+07	5.270E+07
	$S_{BOT\ OF\ STEEL}$ =	mm^3	4.171E+07	7.694E+07	1.395E+08	1.753E+08	1.753E+08	1.108E+08	6.083E+07	7.841E+07	6.083E+07	1.108E+08	1.753E+08	1.753E+08	1.395E+08	7.694E+07	4.171E+07

4. Section: Steel Section + Bottom Slab/n + Top Slab/n & Top Slab Longitudinal Reinforcement - Loading: LL+IM																		
Total Section	A =	mm^2	142,930	169,030	250,823	280,490	280,490	224,823	155,916	165,816	155,916	224,823	280,490	280,490	250,823	169,030	142,930
	d_s =	mm	847.0	682.3	286.2	257.8	257.8	296.2	736.7	636.3	736.7	296.2	257.8	257.8	286.2	682.3	847.0
	I_{NA} =	mm^4	1.196E+11	1.864E+11	3.668E+11	4.204E+11	4.204E+11	3.239E+11	1.591E+11	1.932E+11	1.591E+11	3.239E+11	4.204E+11	4.204E+11	3.668E+11	1.864E+11	1.196E+11
Possitive Flexure: Steel Girder + Top Slab/n	A =	mm^2	142,930	169,030	202,759	232,159	232,159	176,959	155,916	165,816	155,916	176,959	232,159	232,159	202,759	169,030	142,930
	d_s =	mm	847.0	682.3	629.3	553.2	553.2	690.4	736.7	636.3	736.7	690.4	553.2	553.2	629.3	682.3	847.0
	I_{NA} =	mm^4	1.196E+11	1.864E+11	2.421E+11	3.027E+11	3.027E+11	1.946E+11	1.591E+11	1.932E+11	1.591E+11	1.946E+11	3.027E+11	3.027E+11	2.421E+11	1.864E+11	1.196E+11
	$d_{TOP\ OF\ STEEL}$ =	mm	423.0	617.7	680.7	781.8	781.8	594.6	535.3	638.7	535.3	594.6	781.8	781.8	680.7	617.7	423.0
	$d_{BOT\ OF\ STEEL}$ =	mm	2,117.0	1,982.3	1,937.3	1,885.2	1,885.2	1,980.4	2,022.7	1,941.3	2,022.7	1,980.4	1,885.2	1,885.2	1,937.3	1,982.3	2,117.0
	$S_{TOP\ OF\ STEEL}$ =	mm^3	2.827E+08	3.018E+08	3.557E+08	3.872E+08	3.872E+08	3.272E+08	2.973E+08	3.024E+08	2.973E+08	3.272E+08	3.872E+08	3.872E+08	3.557E+08	3.018E+08	2.827E+08
	$S_{BOT\ OF\ STEEL}$ =	mm^3	5.649E+07	9.404E+07	1.250E+08	1.606E+08	1.606E+08	9.826E+07	7.867E+07	9.950E+07	7.867E+07	9.826E+07	1.606E+08	1.606E+08	1.250E+08	9.404E+07	5.649E+07
Negative Flexure: Steel Girder + Top Slab Rebar + Bottom Slab/n	A =	mm^2	66,082	92,182	170,821	200,487	200,487	144,821	77,885	87,785	77,885	144,821	200,487	200,487	170,821	92,182	66,082
	d_s =	mm	147.8	43.7	-258.0	-217.2	-217.2	-340.2	23.9	-85.4	23.9	-340.2	-217.2	-217.2	-258.0	43.7	147.8
	I_{NA} =	mm^4	5.914E+10	1.034E+11	2.078E+11	2.614E+11	2.614E+11	1.587E+11	7.969E+10	9.563E+10	7.969E+10	1.587E+11	2.614E+11	2.614E+11	2.078E+11	1.034E+11	5.914E+10
	$d_{TOP\ OF\ STEEL}$ =	mm	1,122.2	1,256.3	1,568.0	1,552.2	1,552.2	1,625.2	1,248.1	1,360.4	1,248.1	1,625.2	1,552.2	1,552.2	1,568.0	1,256.3	1,122.2
	$d_{BOT\ OF\ STEEL}$ =	mm	1,417.8	1,343.7	1,050.0	1,114.8	1,114.8	949.8	1,309.9	1,219.6	1,309.9	949.8	1,114.8	1,114.8	1,050.0	1,343.7	1,417.8
	$S_{TOP\ OF\ STEEL}$ =	mm^3	5.270E+07	8.230E+07	1.325E+08	1.684E+08	1.684E+08	9.762E+07	6.385E+07	7.030E+07	6.385E+07	9.762E+07	1.684E+08	1.684E+08	1.325E+08	8.230E+07	5.270E+07
	$S_{BOT\ OF\ STEEL}$ =	mm^3	4.171E+07	7.694E+07	1.979E+08	2.345E+08	2.345E+08	1.670E+08	6.083E+07	7.841E+07	6.083E+07	1.670E+08	2.345E+08	2.345E+08	1.979E+08	7.694E+07	4.171E+07

STRENGTH LIMIT STATE

Positive Flexure (Neglect Top Slab Reinforcement)

Check for Compact Section

Depth From Top of Top Slab to PNA, D_p (mm)	312.1	408.1	310.1	309.6	309.6	313.8	438.4	638.4	438.4	313.8	309.6	309.6	310.1	408.1	312.1
	NA within tf	NA within web	NA within tf	NA within tf	NA within tf	NA within web	NA within web	NA within web	NA within web	NA within web	NA within tf	NA within tf	NA within tf	NA within web	NA within tf
a) Check Ductility Requirement (Article 6.10.5.2.2b) Distance Specified in 6.10.5.2.2c, D' (mm)	264.5	267.3	268.0	270.3	270.3	266.3	266.0	267.7	266.0	266.3	270.3	270.3	268.0	267.3	264.5
	D'<Dp<5D'	D'<Dp<5D'	D'<Dp<5D'	D'<Dp<5D'	D'<Dp<5D'	D'<Dp<5D'	D'<Dp<5D'	D'<Dp<5D'	D'<Dp<5D'	D'<Dp<5D'	D'<Dp<5D'	D'<Dp<5D'	D'<Dp<5D'	D'<Dp<5D'	D'<Dp<5D'
b) Check Web Slenderness (Article 6.10.5.2.2c) Depth of Web in Compression, D_{cp}	0.0	94.5	0.0	0.0	0.0	0.2	124.8	324.8	124.8	0.2	0.0	0.0	0.0	94.5	0.0
$2D_{cp}/t_w$	0.0	10.5	0.0	0.0	0.0	0.0	13.9	36.1	13.9	0.0	0.0	0.0	0.0	10.5	0.0
$3.76\sqrt{E/F_{yc}}$	90.5	90.5	90.5	90.5	90.5	90.5	90.5	90.5	90.5	90.5	90.5	90.5	90.5	90.5	90.5
limit ratio	0.00	0.12	0.00	0.00	0.00	0.00	0.15	0.40	0.15	0.00	0.00	0.00	0.00	0.12	0.00
	compact	compact	compact	compact	compact	compact	compact	compact	compact	compact	compact	compact	compact	compact	compact
c) Check Member Proportions (Article 6.10.1.1) Iyc	7.776E+07	1.944E+08	1.080E+09	1.530E+09	1.530E+09	6.300E+08	1.671E+08	1.898E+08	1.671E+08	6.300E+08	1.530E+09	1.530E+09	1.080E+09	1.944E+08	7.776E+07
Iy	1.567E+08	5.753E+08	2.125E+09	3.007E+09	3.007E+09	1.351E+09	4.417E+08	6.087E+08	4.417E+08	1.351E+09	3.007E+09	3.007E+09	2.125E+09	5.753E+08	1.567E+08
	O.K.	O.K.	O.K.	O.K.	O.K.	O.K.	O.K.	O.K.	O.K.	O.K.	O.K.	O.K.	O.K.	O.K.	O.K.
Positive Plastic Moment Capacity, M_p (N-m)	2.884E+07	4.228E+07	5.344E+07	6.658E+07	6.658E+07	4.370E+07	3.664E+07	4.360E+07	3.664E+07	4.370E+07	6.658E+07	6.658E+07	5.344E+07	4.228E+07	2.884E+07
Yield Moment Positive Composite/n, M_y (N-m)	1.949E+07	3.245E+07	4.311E+07	5.539E+07	5.539E+07	3.390E+07	2.714E+07	3.433E+07	2.714E+07	3.390E+07	5.539E+07	5.539E+07	4.311E+07	3.245E+07	1.949E+07
Yield Moment per 6.10.5.1.2, M_y (N-m)	1.616E+07	3.057E+07	4.261E+07	5.472E+07	5.472E+07	3.365E+07	2.207E+07	2.650E+07	2.207E+07	3.365E+07	5.472E+07	5.472E+07	4.261E+07	3.057E+07	1.616E+07
Nominal Flexural Resistance, M_n (N-m)	2.100E+07	3.974E+07	5.278E+07	6.587E+07	6.587E+07	4.303E+07	2.869E+07	3.445E+07	2.869E+07	4.303E+07	6.587E+07	6.587E+07	5.278E+07	3.974E+07	2.100E+07
Find Hybrid Factor															
ρ	1.000	1.000	1.000	1.000	1.000	1.000	1.000	1.000	1.000	1.000	1.000	1.000	1.000	1.000	1.000
ψ	0.833	0.762	0.740	0.707	0.707	0.769	0.791	0.752	0.791	0.769	0.707	0.707	0.740	0.762	0.833
β	6.250	2.000	1.293	0.915	0.915	1.875	2.778	1.818	2.778	1.875	0.915	0.915	1.293	2.000	6.250
Positive Flexure Hybrid Factor, R_h	1.000	1.000	1.000	1.000	1.000	1.000	1.000	1.000	1.000	1.000	1.000	1.000	1.000	1.000	1.000

Negative Flexure (Include Top Slab Reinforcement)

Check for Compact Section

Depth From Top of Bottom Slab to PNA, D_p (mm)	1496.0	1401.0	839.8	876.3	876.3	708.2	1340.5	1159.5	1340.5	708.2	876.3	876.3	839.8	1401.0	1496.0
	NA within web	NA within web	NA within web	NA within web	NA within web	NA within web	NA within web	NA within web	NA within web	NA within web	NA within web	NA within web	NA within web	NA within web	NA within web
a) Check Web Slenderness (Article 6.10.5.2.2c) Depth of Web in Compression, D_{cp}	1478.0	1351.0	781.8	794.3	794.3	668.2	1304.5	1104.5	1304.5	668.2	794.3	794.3	781.8	1351.0	1476.0
$2D_{cp}/t_w$	164.0	150.1	86.9	88.3	88.3	74.2	144.9	122.7	144.9	74.2	88.3	88.3	86.9	150.1	164.0
$3.76\sqrt{E/F_{yc}}$	90.5	90.5	90.5	90.5	90.5	90.5	90.5	90.5	90.5	90.5	90.5	90.5	90.5	90.5	90.5
limit ratio	1.81	1.66	0.96	0.97	0.97	0.82	1.60	1.36	1.60	0.82	0.97	0.97	0.96	1.66	1.81
b) Check Compression Flange Slenderness $b_f/2_{tf}$	9.0	4.5	5.2	3.7	3.7	7.5	6.3	4.1	6.3	7.5	3.7	3.7	5.2	4.5	9.0
$0.382\sqrt{E/F_{yc}}$	9.2	9.2	9.2	9.2	9.2	9.2	9.2	9.2	9.2	9.2	9.2	9.2	9.2	9.2	9.2
limit ratio	0.98	0.49	0.56	0.40	0.40	0.82	0.68	0.44	0.68	0.82	0.40	0.40	0.56	0.49	0.98
c) Check Slenderness Interaction $2D_{cp}/t_w+9.35b_f/2_{tf}$	248.1	192.2	135.2	122.5	122.5	144.4	203.4	161.0	203.4	144.4	122.5	122.5	135.2	192.2	248.1
$6.25\sqrt{E/F_{yc}}$	150.5	150.5	150.5	150.5	150.5	150.5	150.5	150.5	150.5	150.5	150.5	150.5	150.5	150.5	150.5
limit ratio	1.65	1.28	0.90	0.81	0.81	0.96	1.35	1.07	1.35	0.96	0.81	0.81	0.90	1.28	1.65
	non-compact	non-compact	compact	compact	compact	compact	non-compact	non-compact	non-compact	compact	compact	compact	compact	non-compact	non-compact
Negative Plastic Moment Capacity (N-m)	1.975E+07	3.156E+07	5.449E+07	6.803E+07	6.803E+07	4.215E+07	2.524E+07	2.955E+07	2.524E+07	4.215E+07	6.803E+07	6.803E+07	5.449E+07	3.156E+07	1.975E+07
Nominal Flexural Resistance, Mn (N-m)	0.000E+00	0.000E+00	5.449E+07	6.803E+07	6.803E+07	4.215E+07	0.000E+00	0.000E+00	0.000E+00	4.215E+07	6.803E+07	6.803E+07	5.449E+07	0.000E+00	0.000E+00
Find Hybrid Factor															
ρ	1.000	1.000	1.000	1.000	1.000	1.000	1.000	1.000	1.000	1.000	1.000	1.000	1.000	1.000	1.000
β	12.500	5.000	2.500	1.765	1.765	4.286	9.091	8.000	9.091	4.286	1.765	1.765	2.500	5.000	12.500
Negative Flexure Hybrid Factor, R_h	1.000	1.000	1.000	1.000	1.000	1.000	1.000	1.000	1.000	1.000	1.000	1.000	1.000	1.000	1.000

LIVE-LOAD LATERAL BENDING MOMENT DISTRIBUTION FACTORS

Interior Girder		SPAN 1				SPAN 2							SPAN 3			
e_g =	mm	1,449.3	1,518.4	1,435.7	1,432.8	1,432.8	1,492.2	1,562.6	1,864.3	1,562.6	1,492.2	1,432.8	1,432.8	1,435.7	1,518.4	1,449.3
K_g =	mm^4	1.380E+12	2.284E+12	3.024E+12	3.910E+12	3.910E+12	2.380E+12	1.803E+12	2.419E+12	1.803E+12	2.380E+12	3.910E+12	3.910E+12	3.024E+12	2.284E+12	1.380E+12
Positive Moment Distribution Factor																
Average Span Length	mm	85,000	85,000	85,000	85,000	100,000	100,000	100,000	100,000	100,000	100,000	100,000	85,000	85,000	85,000	85,000
Maximum of One, and two or more lanes loaded		0.758	0.795	0.818	0.835	0.743	0.710	0.686	0.711	0.686	0.710	0.743	0.835	0.818	0.795	0.758
Negative Moment Distribution Factor																
Average Span Length	mm	82,500	82,500	82,500	82,500	82,500	82,500	82,500	82,500	82,500	82,500	82,500	82,500	82,500	82,500	82,500
Maximum of One, and two or more lanes loaded		0.712	0.745	0.764	0.782	0.782	0.748	0.733	0.749	0.733	0.748	0.782	0.782	0.764	0.745	0.712

LOAD COMBINATIONS

		Fy =	345.00	DC_D DL	DC_1 DL	DC_2 DL	DW DL	LL Envelope (Lane Load)		LL Envelope (Girder Load)		Strength I Moment (M_{u1})		Strength IV Moment (M_{u2})		Yield Mom	M_u/M_y		Service II Stresses (MPa)		Service II Stresses (MPa)		$\phi 0.95xR_hxF_{yf}$	$\phi 0.95xR_hxF_{yw}$
				Moment	Moment	Moment	Moment	Min Moment	Max Moment	Min Moment	Max Moment	Min Moment	Max Moment	Min Moment	Max Moment	M_y	Max Moment	Min Moment	Min Moment		Max Moment		top Range	bot Range
	X1	X2		(N-m)	(N-m)	(N-m)	(N-m)	(N-m)	(N-m)	(N)	(N-m)	(N-m)	(N-m)	(N-m)	(N-m)	(N-m)			$R_{h\,yield\,top}$	$R_{h\,yield\,bottom}$	$R_{h\,yield\,top}$	$R_{h\,yield\,bottom}$	ratio	ratio
0.00	0.0	2.2	0.00E+00	0.00E+00	0.00E+00	0.00E+00	0.00E+00	0.00E+00	0.00E+00	0.00E+00	0.00E+00	0.000E+00	0.000E+00	0.000E+00	0.000E+00	1.949E+07	0.00	0.00	0.00	0.00	0.00	0.00	0.00	0.00
13.50	13.0	15.2	7.74E+05	4.05E+06	4.98E+05	5.39E+05	-2.29E+06	6.84E+06	-1.83E+06	5.19E+06	4.362E+06	1.572E+07	8.351E+06	8.351E+06	1.818E+07	0.75	0.21	101.88	102.42	165.90	272.86	0.51	0.83
13.50	13.0	15.2	7.74E+05	4.05E+06	4.98E+05	5.39E+05	-2.29E+06	6.84E+06	-1.70E+06	5.44E+06	4.255E+06	1.613E+07	8.351E+06	8.351E+06	3.057E+07	0.41	0.11	54.77	50.23	105.12	154.21	0.32	0.47
28.17	28.2	30.3	4.78E+05	3.64E+06	4.53E+05	4.90E+05	-4.77E+06	9.28E+06	-3.56E+06	7.38E+06	2.148E+05	1.638E+07	7.211E+06	7.211E+06	3.083E+07	0.46	0.01	14.0	8.1	101.9	170.1	0.31	0.52
51.30	49.8	52.0	-2.74E+06	-7.26E+06	-8.67E+05	-8.38E+05	-1.07E+07	4.49E+06	-7.97E+06	3.57E+06	-2.750E+07	-8.317E+06	-1.663E+07	-1.663E+07	3.659E+07	non-compact	non-compact	-301.70	-298.90	-180.41	-112.90	0.92	0.81
51.30	49.8	52.0	-2.74E+06	-7.26E+06	-8.67E+05	-9.38E+05	-1.07E+07	4.49E+06	-8.18E+06	3.66E+06	-2.784E+07	-8.184E+06	-1.663E+07	-1.663E+07	4.285E+07	0.15	0.51	-185.51	-146.58	-91.83	-54.79	0.57	0.45
58.80	58.5	60.7	-5.10E+06	-1.35E+07	-1.62E+06	-1.75E+06	-1.31E+07	2.17E+06	-1.00E+07	1.77E+06	-4.313E+07	-2.354E+07	-3.127E+07	-3.127E+07	4.261E+07	0.43	0.79	-293.92	-238.35	-189.20	-154.15	0.90	0.73
58.80	58.5	60.7	-5.10E+06	-1.35E+07	-1.62E+06	-1.75E+06	-1.31E+07	2.17E+06	-1.03E+07	1.81E+06	-4.352E+07	-2.347E+07	-3.127E+07	-3.127E+07	5.484E+07	0.34	0.64	-226.55	-190.81	-141.34	-119.32	0.69	0.58
65.00	62.8	65.0	-6.25E+06	-1.96E+07	-2.37E+06	-2.56E+06	-1.59E+07	2.07E+06	-1.25E+07	1.73E+06	-6.026E+07	-3.666E+07	-4.670E+07	-4.670E+07	5.472E+07	0.54	0.89	-316.60	-270.04	-214.51	-186.91	0.97	0.82
0.00	0.0	3.3	-6.25E+06	-1.96E+07	-2.37E+06	-2.56E+06	-1.59E+07	2.07E+06	-1.25E+07	1.54E+06	-6.026E+07	-3.667E+07	-4.670E+07	-4.670E+07	5.472E+07	0.54	0.89	-316.60	-270.04	-215.15	-188.45	0.97	0.82
9.00	8.7	10.0	-3.00E+06	-1.01E+07	-1.20E+06	-1.30E+06	-8.79E+06	2.18E+06	-6.87E+06	1.62E+06	-3.020E+07	-1.809E+07	-2.216E+07	-2.216E+07	5.485E+07	0.24	0.44	-157.37	-132.27	-98.87	-81.06	0.48	0.40
9.00	8.7	10.0	-3.00E+06	-1.01E+07	-1.20E+06	-1.30E+06	-8.79E+06	2.18E+06	-6.57E+06	1.55E+06	-2.870E+07	-1.620E+07	-2.216E+07	-2.216E+07	3.381E+07	0.38	0.70	-289.11	-208.84	-195.47	-137.35	0.88	0.64
19.50	18.7	20.0	3.59E+05	-1.26E+06	-1.31E+05	-1.42E+05	-5.48E+06	4.74E+06	-4.10E+06	3.37E+06	-8.237E+06	4.170E+06	-1.674E+06	-1.674E+06	3.365E+07	0.10	0.20	-89.19	-41.72	-1.26	34.71	0.21	0.13
19.50	18.7	20.0	3.59E+05	-1.26E+06	-1.31E+05	-1.42E+05	-5.48E+06	4.74E+06	-4.02E+06	3.30E+06	-8.104E+06	4.062E+06	-1.674E+06	-1.674E+06	2.771E+07	0.14	non-compact	-105.45	-106.73	-9.26	33.65	0.32	0.33
34.50	33.3	36.7	2.51E+06	6.80E+06	8.50E+05	9.20E+05	-3.28E+06	9.36E+06	-2.41E+06	6.52E+06	9.376E+06	2.421E+07	1.579E+07	1.579E+07	2.207E+07	0.84	0.33	166.17	143.48	243.85	302.57	0.74	0.92
34.50	33.3	36.7	2.51E+06	6.80E+06	8.50E+05	9.20E+05	-3.28E+06	9.36E+06	-2.46E+06	6.66E+06	9.289E+06	2.444E+07	1.579E+07	1.579E+07	2.978E+07	0.71	0.27	146.09	109.06	220.17	236.80	0.67	0.72
50.00	50.0	53.3	3.31E+06	9.64E+06	1.20E+06	1.29E+06	-2.65E+06	1.13E+07	-1.99E+06	8.06E+06	1.534E+07	3.204E+07	2.200E+07	2.200E+07	2.650E+07	0.83	0.45	229.87	175.73	301.27	314.01	0.92	0.96
65.50	63.3	66.7	2.51E+06	6.80E+06	8.50E+05	9.20E+05	-3.28E+06	9.36E+06	-2.46E+06	6.66E+06	9.289E+06	2.444E+07	1.579E+07	1.579E+07	2.978E+07	0.71	0.27	146.09	109.06	220.17	236.80	0.67	0.72
65.50	63.3	66.7	2.51E+06	6.80E+06	8.50E+05	9.20E+05	-3.28E+06	9.36E+06	-2.41E+06	6.52E+06	9.376E+06	2.421E+07	1.579E+07	1.579E+07	2.207E+07	0.84	0.33	166.17	143.48	243.85	302.57	0.74	0.92
80.50	80.0	83.3	3.59E+05	-1.26E+06	-1.31E+05	-1.42E+05	-5.48E+06	4.74E+06	-4.02E+06	3.30E+06	-8.104E+06	4.062E+06	-1.674E+06	-1.674E+06	2.771E+07	0.14	non-compact	-105.45	-106.73	-9.26	33.65	0.32	0.33
80.50	80.0	83.3	3.59E+05	-1.26E+06	-1.31E+05	-1.42E+05	-5.48E+06	4.74E+06	-4.10E+06	3.37E+06	-8.237E+06	4.170E+06	-1.674E+06	-1.674E+06	3.365E+07	0.10	0.20	-89.19	-41.72	-1.26	34.71	0.21	0.13
91.00	90.0	93.3	-3.00E+06	-1.01E+07	-1.20E+06	-1.30E+06	-8.79E+06	2.18E+06	-6.57E+06	1.55E+06	-2.870E+07	-1.620E+07	-2.216E+07	-2.216E+07	3.381E+07	0.38	0.70	-289.11	-208.84	-195.47	-137.35	0.88	0.64
91.00	90.0	93.3	-3.00E+06	-1.01E+07	-1.20E+06	-1.30E+06	-8.79E+06	2.18E+06	-6.87E+06	1.62E+06	-3.020E+07	-1.809E+07	-2.216E+07	-2.216E+07	5.485E+07	0.24	0.44	-157.37	-132.27	-98.87	-81.06	0.48	0.40
100.00	98.7	100.0	-6.25E+06	-1.96E+07	-2.37E+06	-2.56E+06	-1.59E+07	2.07E+06	-1.25E+07	1.54E+06	-6.026E+07	-3.667E+07	-4.670E+07	-4.670E+07	5.472E+07	0.54	0.89	-316.60	-270.04	-215.15	-188.45	0.97	0.82
0.00	0.0	2.2	-6.25E+06	-1.96E+07	-2.37E+06	-2.56E+06	-1.59E+07	2.07E+06	-1.25E+07	1.73E+06	-6.026E+07	-3.666E+07	-4.670E+07	-4.670E+07	5.472E+07	0.54	0.89	-316.60	-270.04	-214.51	-186.91	0.97	0.82
8.20	4.3	6.5	-5.10E+06	-1.35E+07	-1.62E+06	-1.75E+06	-1.31E+07	2.17E+06	-1.03E+07	1.81E+06	-4.352E+07	-2.347E+07	-3.127E+07	-3.127E+07	5.484E+07	0.34	0.64	-226.55	-190.81	-141.34	-119.32	0.69	0.58
8.20	4.3	6.5	-5.10E+06	-1.35E+07	-1.62E+06	-1.75E+06	-1.31E+07	2.17E+06	-1.00E+07	1.77E+06	-4.313E+07	-2.354E+07	-3.127E+07	-3.127E+07	4.261E+07	0.43	0.79	-293.92	-238.35	-189.20	-154.15	0.90	0.73
13.70	13.0	15.2	-2.74E+06	-7.26E+06	-8.67E+05	-8.38E+05	-1.07E+07	4.49E+06	-8.18E+06	3.66E+06	-2.784E+07	-8.184E+06	-1.663E+07	-1.663E+07	4.285E+07	0.15	0.51	-185.51	-146.58	-91.83	-54.79	0.57	0.45
13.70	13.0	15.2	-2.74E+06	-7.26E+06	-8.67E+05	-9.38E+05	-1.07E+07	4.49E+06	-7.97E+06	3.57E+06	-2.750E+07	-8.317E+06	-1.663E+07	-1.663E+07	3.659E+07	non-compact	non-compact	-301.70	-298.90	-180.41	-112.90	0.92	0.81
36.83	36.8	38.0	4.78E+05	3.64E+06	4.63E+05	4.90E+05	-4.77E+06	9.28E+06	-3.56E+06	7.38E+06	2.148E+05	1.638E+07	7.211E+06	7.211E+06	3.083E+07	0.46	0.01	13.99	8.06	101.94	170.13	0.31	0.52
51.50	49.8	52.0	7.74E+05	4.05E+06	4.98E+05	5.39E+05	-2.29E+06	6.84E+06	-1.70E+06	5.44E+06	4.255E+06	1.613E+07	8.351E+06	8.351E+06	3.057E+07	0.41	0.11	54.77	50.23	105.12	154.21	0.32	0.47
51.50	49.8	52.0	7.74E+05	4.05E+06	4.98E+05	5.39E+05	-2.29E+06	6.84E+06	-1.83E+06	5.19E+06	4.362E+06	1.572E+07	8.351E+06	8.351E+06	1.818E+07	0.75	0.21	101.88	102.42	165.90	272.86	0.51	0.83
65.00	62.8	65.0	8.42E-04	4.33E-03	5.31E-04	5.75E-04	-1.88E-03	6.55E-03	-1.21E-03	4.87E-03	5.501E-03	1.588E-02	8.951E-03	8.951E-03	1.949E+07	0.00	0.00	0.00	0.00	0.00	0.00	0.00	0.00

Appendix F

Double Composite Box Girder Bridge Design Calculations

COMPOSITE STEEL GIRDER BRIDGE - USF STUDY

MATERIAL PROPERTIES

Steel Modulus of Elasticity =	200000	MPa
Concrete Modulus of Elasticity =	30	MPa
Density of Steel =	77000	N/m3
Density of Concrete =	23600	N/m3
Short Term Modular Ratio =	8	
Long Term Modular Ratio =	24	
Top Flange Steel Yield Stress =	345	MPa
Web Steel Yield Stress =	345	MPa
Bottom Web Steel Yield Stress =	345	MPa
Reinforcement Yield Stress =	420	MPa
Concrete Strength =	30	MPa

ADDITIONAL LOADING REQUIREMENTS

Stay in Place Forms =	1000	N/m2
Future Wearing Surface =	1000	N/m2
Traffic Barries (each) =	5700	N/m

Additional Loads per Girder

Stay in Place Forms =	6166	N/m
Future Wearing Surface =	6166	N/m
Traffic Barries =	5700	N/m

Design Requirements

b =	0.7	

GIRDER INFORMATION

Number of Lanes =	3	
Number of Girders =	2	
Spacing Between Girders =	3657.6	mm
Bridge Roadway Width =	12331.2	mm
Top Slab Thickness =	228.6	mm
Bottom Slab Thickness =	177.8	mm
Number of Spans =	3	
Span Length 1 =	65	m
Span Length 2 =	100	m
Span Length 3 =	65	m
Width of OverHang =	1219.2	mm

L1 =	41.577
L2 =	
L3 =	

DOUBLE COMPOSITE STEEL BOX GIRDER BRIDGE DESIGN

		SPAN 1				SPAN 2							SPAN 3				
Span Number		1	1	1	1	2	2	2	2	2	2	2	3	3	3	3	
Section Number		1	2	3	4	1	2	3	4	5	6	7	1	2	3	4	
Section Length, m		13.5	37.8	7.5	6.2	9	10.5	15	31	15	10.5	9	6.2	7.5	37.8	13.5	
Section Start, m		0.0	13.5	51.3	58.8	0.0	9.0	19.5	34.5	65.5	80.5	91.0	0.0	6.2	13.7	51.5	
Section End, m		13.5	51.3	58.8	65.0	9.0	19.5	34.5	65.5	80.5	91.0	100.0	6.2	13.7	51.5	65.0	
Box Steel Girder																	
Top Flange Thickness, t_{tf}	mm	20	35	40	70	70	35	22	25	22	35	70	70	40	35	20	
Top Flange Width, b_{tf}	mm	360	360	600	600	600	600	450	450	450	600	600	600	600	360	360	
Web Thickness, t_w	mm	18	18	18	18	18	18	18	18	18	18	18	18	18	18	18	
Web Depth, d_w	mm	2500	2500	2500	2500	2500	2500	2500	2500	2500	2500	2500	2500	2500	2500	2500	
Web Length, L_w	mm	2577	2577	2577	2577	2577	2577	2577	2577	2577	2577	2577	2577	2577	2577	2577	
Web Slope, S		4	4	4	4	4	4	4	4	4	4	4	4	4	4	4	
Bottom Flange Thickness, t_{bf}	mm	20	20	30	40	40	30	20	20	20	30	40	40	30	20	20	
Bottom Flange Width, b_{bf}	mm	2457.6	2457.6	2457.6	2457.6	2457.6	2457.6	2457.6	2457.6	2457.6	2457.6	2457.6	2457.6	2457.6	2457.6	2457.6	
Longitudinal Bottom Stiffener																	
$A_{stiffener}$ =	mm^2																
$y_{cc\ stiffener}$ =	mm																
$I_{xg\ stiffener}$ =	mm^4																
Total Steel Section																	
A_{girder} =	mm^2	156,324	167,124	214,500	275,076	275,076	208,500	161,724	164,424	161,724	208,500	275,076	275,076	214,500	167,124	156,324	
$y_{cc\ girder}$ =	mm	-280.11	-179.45	-150.61	-61.46	-61.46	-191.99	-226.56	-203.90	-226.56	-191.99	-61.46	-61.46	-150.61	-179.45	-280.11	
$I_{xg\ girder}$ =	mm^4	1.370E+11	1.615E+11	2.389E+11	3.446E+11	3.446E+11	2.261E+11	1.494E+11	1.554E+11	1.494E+11	2.261E+11	3.446E+11	3.446E+11	2.389E+11	1.615E+11	1.370E+11	
Concrete Slabs																	
Top Concrete Slab																	
Distance Top of Web/Concrete Bottom	mm	85	85	85	85	85	85	85	85	85	85	85	85	85	85	85	
Effective Slab Width, b_{ts}	mm	5604	5604	5784	5784	5784	5784	5672	5672	5672	5784	5784	5784	5784	5604	5604	
Slab Thickness, t_{ts}	mm	228.6	228.6	228.6	228.6	228.6	228.6	228.6	228.6	228.6	228.6	228.6	228.6	228.6	228.6	228.6	
$A_{top\ slab}$ =	mm^2	1,281,074	1,281,074	1,322,222	1,322,222	1,322,222	1,322,222	1,296,619	1,296,619	1,296,619	1,322,222	1,322,222	1,322,222	1,322,222	1,281,074	1,281,074	
$y_{cc\ top\ slab}$ =	mm	1449.3	1449.3	1449.3	1449.3	1449.3	1449.3	1449.3	1449.3	1449.3	1449.3	1449.3	1449.3	1449.3	1449.3	1449.3	
$I_{xg\ top\ slab}$ =	mm^4	5.579E+09	5.579E+09	5.758E+09	5.758E+09	5.758E+09	5.758E+09	5.647E+09	5.647E+09	5.647E+09	5.758E+09	5.758E+09	5.758E+09	5.758E+09	5.579E+09	5.579E+09	
Top Concrete Slab Reinforcement																	
Reinforcement Area	% concrete	1.00%	1.00%	1.00%	1.00%	1.00%	1.00%	1.00%	1.00%	1.00%	1.00%	1.00%	1.00%	1.00%	1.00%	1.00%	
Top Layer Reinforcement	% steel	2/3	2/3	2/3	2/3	2/3	2/3	2/3	2/3	2/3	2/3	2/3	2/3	2/3	2/3	2/3	
Bottom Layer Reinforcement	% steel	1/3	1/3	1/3	1/3	1/3	1/3	1/3	1/3	1/3	1/3	1/3	1/3	1/3	1/3	1/3	
Distance Top of Slab/CG Top Rebar	mm	76.2	76.2	76.2	76.2	76.2	76.2	76.2	76.2	76.2	76.2	76.2	76.2	76.2	76.2	76.2	
Distance Top of Slab/CG Bottom Rebar	mm	152.4	152.4	152.4	152.4	152.4	152.4	152.4	152.4	152.4	152.4	152.4	152.4	152.4	152.4	152.4	
A_{rebar} =	mm^2	12,811	12,811	13,222	13,222	13,222	13,222	12,966	12,966	12,966	13,222	13,222	13,222	13,222	12,811	12,811	
$y_{cc\ rebar}$ =	mm	1,462.0	1,462.0	1,462.0	1,462.0	1,462.0	1,462.0	1,462.0	1,462.0	1,462.0	1,462.0	1,462.0	1,462.0	1,462.0	1,462.0	1,462.0	
Bottom Concrete Slab																	
Include Bottom Concrete Slab in Sectio	Y or N	N	N	Y	Y	Y	Y	N	N	N	Y	Y	Y	Y	N	N	
Distance Bottom of Web/Concrete Botto	mm	0	0	0	0	0	0	0	0	0	0	0	0	0	0	0	
Effective Slab Width, b_{bs}	mm	0	0	2371.6	2371.6	2371.6	2371.6	0	0	0	2371.6	2371.6	2371.6	2371.6	0	0	
Slab Thickness, t_{bs}	mm	0	0	177.8	177.8	177.8	177.8	0	0	0	177.8	177.8	177.8	177.8	0	0	
$A_{bot\ slab}$ =	mm^2	0	0	421,670	421,670	421,670	421,670	0	0	0	421,670	421,670	421,670	421,670	0	0	
$y_{cc\ bot\ slab}$ =	mm	-1,250.0	-1,250.0	-1,161.1	-1,161.1	-1,161.1	-1,161.1	-1,250.0	-1,250.0	-1,250.0	-1,161.1	-1,161.1	-1,161.1	-1,161.1	-1,250.0	-1,250.0	
$I_{xg\ bot\ slab}$ =	mm^4	0.000E+00	0.000E+00	1.111E+09	1.111E+09	1.111E+09	1.111E+09	0.000E+00	0.000E+00	0.000E+00	1.111E+09	1.111E+09	1.111E+09	1.111E+09	0.000E+00	0.000E+00	
Steel Weight per Section																	
Top Flange	kg	1526	7477	2826	4088	5934	3461	2331	5475	2331	3461	5934	4088	2826	7477	1526	60760
100 Web	kg	9537	26703	5208	4380	6358	7417	10506	21809	10506	7417	6358	4380	5208	26703	9537	162477
Bot Flange	kg	5208	14583	4340	4784	6944	6076	5787	11960	5787	6076	6944	4784	4340	14583	5208	107407
Total x 0.5		8135	24381	6232	6626	9618	8478	9357	19667	9357	8478	9618	6626	6232	24381	8135	165322
Total		16271	48763	12464	13252	19236	16955	18715	39334	18715	16955	19236	13252	12464	48763	16271	330644

ELASTIC SECTION PROPERTIES AND LOADING CONDITIONS

1. Section: Steel Girder + Loading: DC_0 (Steel Girder+Bottom Slab w/o Forms)																	
Loading	w_{girder} =	N/m	12,037	12,869	16,517	21,181	21,181	16,055	12,453	12,661	12,453	16,055	21,181	21,181	16,517	12,869	12,037
	$w_{bot\ slab}$ =	N/m	0	0	9,952	9,952	9,952	9,952	0	0	0	9,952	9,952	9,952	9,952	0	0
	w_{DC0} =	N/m	12,037	12,869	26,469	31,133	31,133	26,007	12,453	12,661	12,453	26,007	31,133	31,133	26,469	12,869	12,037
Total Section Positive Flexure & Negative Flexure	A =	mm^2	156,324	167,124	214,500	275,076	275,076	208,500	161,724	164,424	161,724	208,500	275,076	275,076	214,500	167,124	156,324
	d_s =	mm	-280.11	-179.45	-150.61	-61.46	-61.46	-191.99	-228.56	-203.90	-228.56	-191.99	-61.46	-61.46	-150.61	-179.45	-280.11
	I_{NA} =	mm^4	1.370E+11	1.615E+11	2.389E+11	3.446E+11	3.446E+11	2.261E+11	1.494E+11	1.554E+11	1.494E+11	2.261E+11	3.446E+11	3.446E+11	2.389E+11	1.615E+11	1.370E+11
	$d_{TOP\ OF\ STEEL}$	mm	1,550.1	1,464.5	1,440.6	1,381.5	1,381.5	1,477.0	1,500.6	1,478.9	1,500.6	1,477.0	1,381.5	1,381.5	1,440.6	1,464.5	1,550.1
	$d_{BOT\ OF\ STEEL}$	mm	989.9	1,090.5	1,129.4	1,228.5	1,228.5	1,068.0	1,041.4	1,066.1	1,041.4	1,068.0	1,228.5	1,228.5	1,129.4	1,090.5	989.9
	$S_{TOP\ OF\ STEEL}$	mm^3	8.835E+07	1.103E+08	1.658E+08	2.494E+08	2.494E+08	1.531E+08	9.956E+07	1.051E+08	9.956E+07	1.531E+08	2.494E+08	2.494E+08	1.658E+08	1.103E+08	8.835E+07
	$S_{BOT\ OF\ STEEL}$	mm^3	1.384E+08	1.481E+08	2.115E+08	2.805E+08	2.805E+08	2.078E+08	1.434E+08	1.457E+08	1.434E+08	2.078E+08	2.805E+08	2.805E+08	2.115E+08	1.481E+08	1.384E+08
2. Section: Steel Girder + Bottom Slab/3n + Loading: DC_1 (Top Slab w/ Forms)																	
Loading	w_{DC1} =	N/m	39,430	39,430	39,430	39,430	39,430	39,430	39,430	39,430	39,430	39,430	39,430	39,430	39,430	39,430	39,430
Total Section	A =	mm^2	156,324	167,124	232,070	292,646	292,646	226,070	161,724	164,424	161,724	226,070	292,646	292,646	232,070	167,124	156,324
	d_s =	mm	-280.11	-179.45	-227.11	-127.48	-127.48	-267.31	-228.56	-203.90	-228.56	-267.31	-127.48	-127.48	-227.11	-179.45	-280.11
	I_{NA} =	mm^4	1.370E+11	1.615E+11	2.555E+11	3.646E+11	3.646E+11	2.414E+11	1.494E+11	1.554E+11	1.494E+11	2.414E+11	3.646E+11	3.646E+11	2.555E+11	1.615E+11	1.370E+11
Positive Flexure: Steel Girder	A =	mm^2	156,324	167,124	214,500	275,076	275,076	208,500	161,724	164,424	161,724	208,500	275,076	275,076	214,500	167,124	156,324
	d_s =	mm	-280.11	-179.45	-150.61	-61.46	-61.46	-191.99	-228.56	-203.90	-228.56	-191.99	-61.46	-61.46	-150.61	-179.45	-280.11
	I_{NA} =	mm^4	1.37E+11	1.61E+11	2.39E+11	3.45E+11	3.45E+11	2.26E+11	1.49E+11	1.55E+11	1.49E+11	2.26E+11	3.45E+11	3.45E+11	2.39E+11	1.61E+11	1.37E+11
	$d_{TOP\ OF\ STEEL}$	mm	1,550.1	1,464.5	1,440.6	1,381.5	1,381.5	1,477.0	1,500.6	1,478.9	1,500.6	1,477.0	1,381.5	1,381.5	1,440.6	1,464.5	1,550.1
	$d_{BOT\ OF\ STEEL}$	mm	989.9	1,090.5	1,129.4	1,228.5	1,228.5	1,068.0	1,041.4	1,066.1	1,041.4	1,068.0	1,228.5	1,228.5	1,129.4	1,090.5	989.9
	$S_{TOP\ OF\ STEEL}$	mm^3	8.835E+07	1.103E+08	1.658E+08	2.494E+08	2.494E+08	1.531E+08	9.956E+07	1.051E+08	9.956E+07	1.531E+08	2.494E+08	2.494E+08	1.658E+08	1.103E+08	8.835E+07
	$S_{BOT\ OF\ STEEL}$	mm^3	1.384E+08	1.481E+08	2.115E+08	2.805E+08	2.805E+08	2.078E+08	1.434E+08	1.457E+08	1.434E+08	2.078E+08	2.805E+08	2.805E+08	2.115E+08	1.481E+08	1.384E+08
Negative Flexure: Steel Girder + Bottom Slab/3n	A =	mm^2	156,324	167,124	232,070	292,646	292,646	226,070	161,724	164,424	161,724	226,070	292,646	292,646	232,070	167,124	156,324
	d_s =	mm	-280.11	-179.45	-227.11	-127.48	-127.48	-267.31	-228.56	-203.90	-228.56	-267.31	-127.48	-127.48	-227.11	-179.45	-280.11
	I_{NA} =	mm^4	1.370E+11	1.615E+11	2.555E+11	3.646E+11	3.646E+11	2.414E+11	1.494E+11	1.554E+11	1.494E+11	2.414E+11	3.646E+11	3.646E+11	2.555E+11	1.615E+11	1.370E+11
	$d_{TOP\ OF\ STEEL}$	mm	1,550.1	1,464.5	1,517.1	1,447.5	1,447.5	1,552.3	1,500.6	1,478.9	1,500.6	1,552.3	1,447.5	1,447.5	1,517.1	1,464.5	1,550.1
	$d_{BOT\ OF\ STEEL}$	mm	989.9	1,090.5	1,052.9	1,162.5	1,162.5	1,012.7	1,041.4	1,066.1	1,041.4	1,012.7	1,162.5	1,162.5	1,052.9	1,090.5	989.9
	$S_{TOP\ OF\ STEEL}$	mm^3	8.835E+07	1.103E+08	1.684E+08	2.519E+08	2.519E+08	1.555E+08	9.956E+07	1.051E+08	9.956E+07	1.555E+08	2.519E+08	2.519E+08	1.684E+08	1.103E+08	8.835E+07
	$S_{BOT\ OF\ STEEL}$	mm^3	1.384E+08	1.481E+08	2.427E+08	3.136E+08	3.136E+08	2.383E+08	1.434E+08	1.457E+08	1.434E+08	2.383E+08	3.136E+08	3.136E+08	2.427E+08	1.481E+08	1.384E+08
3. Section: Steel Section + Bottom Slab/3n + Top Slab/3n + Top Slab Longitudinal Reinforcement + Loading: DC_2 (Barriers) & DW (Wearing Surface)																	
Loading	w_{DC2} =	N/m	5,700	5,700	5,700	5,700	5,700	5,700	5,700	5,700	5,700	5,700	5,700	5,700	5,700	5,700	5,700
	w_{DW} =	N/m	6,166	6,166	6,166	6,166	6,166	6,166	6,166	6,166	6,166	6,166	6,166	6,166	6,166	6,166	6,166
Total Section	A =	mm^2	209,702	220,502	287,162	347,738	347,738	281,162	215,750	218,450	215,750	281,162	347,738	347,738	287,162	220,502	209,702
	d_s =	mm	160.10	214.83	94.51	122.33	122.33	60.05	191.59	204.06	191.59	60.05	122.33	122.33	94.51	214.83	160.10
	I_{NA} =	mm^4	2.562E+11	2.690E+11	3.809E+11	4.801E+11	4.801E+11	3.721E+11	2.636E+11	2.668E+11	2.636E+11	3.721E+11	4.801E+11	4.801E+11	3.809E+11	2.690E+11	2.562E+11
Positive Flexure: Steel Girder + Top Slab/3n	A =	mm^2	209,702	220,502	269,593	330,169	330,169	263,593	215,750	218,450	215,750	263,593	330,169	330,169	269,593	220,502	209,702
	d_s =	mm	160.10	214.83	178.34	190.63	190.63	151.05	191.59	204.06	191.59	151.05	190.63	190.63	178.34	214.83	160.10
	I_{NA} =	mm^4	2.56E+11	2.69E+11	3.51E+11	4.50E+11	4.50E+11	3.44E+11	2.64E+11	2.67E+11	2.64E+11	3.44E+11	4.50E+11	4.50E+11	3.51E+11	2.69E+11	2.56E+11
	$d_{TOP\ OF\ STEEL}$	mm	1,109.9	1,070.2	1,113.7	1,129.4	1,129.4	1,134.0	1,060.4	1,070.0	1,060.4	1,134.0	1,129.4	1,129.4	1,113.7	1,070.2	1,109.9
	$d_{BOT\ OF\ STEEL}$	mm	1,430.1	1,484.8	1,458.3	1,480.6	1,480.6	1,431.0	1,461.6	1,475.0	1,461.6	1,431.0	1,480.6	1,480.6	1,458.3	1,484.8	1,430.1
	$S_{TOP\ OF\ STEEL}$	mm^3	2.308E+08	2.514E+08	3.155E+08	3.981E+08	3.981E+08	3.031E+08	2.440E+08	2.493E+08	2.440E+08	3.031E+08	3.981E+08	3.981E+08	3.155E+08	2.514E+08	2.308E+08
	$S_{BOT\ OF\ STEEL}$	mm^3	1.791E+08	1.812E+08	2.412E+08	3.036E+08	3.036E+08	2.402E+08	1.804E+08	1.809E+08	1.804E+08	2.402E+08	3.036E+08	3.036E+08	2.412E+08	1.812E+08	1.791E+08
Negative Flexure: Steel Girder + Top Slab Rebar + Bottom Slab/3n	A =	mm^2	169,135	179,935	245,292	305,868	305,868	239,292	174,890	177,390	174,890	239,292	305,868	305,868	245,292	179,935	169,135
	d_s =	mm	-148.16	-82.58	-136.06	-58.77	-58.77	-171.76	-103.06	-82.13	-103.06	-171.76	-58.77	-58.77	-136.06	-82.58	-148.16
	I_{NA} =	mm^4	1.729E+11	1.935E+11	2.912E+11	3.966E+11	3.966E+11	2.787E+11	1.837E+11	1.887E+11	1.837E+11	2.787E+11	3.966E+11	3.966E+11	2.912E+11	1.935E+11	1.729E+11
	$d_{TOP\ OF\ STEEL}$	mm	1,418.2	1,347.8	1,426.1	1,378.8	1,378.8	1,458.8	1,375.1	1,357.1	1,375.1	1,458.8	1,378.8	1,378.8	1,426.1	1,347.8	1,418.2
	$d_{BOT\ OF\ STEEL}$	mm	1,121.8	1,207.4	1,143.9	1,231.2	1,231.2	1,108.2	1,166.9	1,187.9	1,166.9	1,108.2	1,231.2	1,231.2	1,143.9	1,207.4	1,121.8
	$S_{TOP\ OF\ STEEL}$	mm^3	1.219E+08	1.436E+08	2.042E+08	2.876E+08	2.876E+08	1.913E+08	1.336E+08	1.391E+08	1.336E+08	1.913E+08	2.876E+08	2.876E+08	2.042E+08	1.436E+08	1.219E+08
	$S_{BOT\ OF\ STEEL}$	mm^3	1.541E+08	1.603E+08	2.545E+08	3.221E+08	3.221E+08	2.515E+08	1.574E+08	1.589E+08	1.574E+08	2.515E+08	3.221E+08	3.221E+08	2.545E+08	1.603E+08	1.541E+08

4. Section: Steel Section + Bottom Slab/n + Top Slab/n & Top Slab Longitudinal Reinforcement - Loading: LL+IM																	
Total Section	A =	mm^2	316,458	327,258	432,487	493,063	493,063	426,487	323,801	326,501	323,801	426,487	493,063	493,063	432,487	327,258	316,458
	d_s =	mm	595.0	617.5	337.7	327.4	327.4	324.3	611.3	616.8	611.3	324.3	327.4	327.4	337.7	617.5	595.0
	I_{NA} =	mm^4	3.742E+11	3.791E+11	6.135E+11	7.119E+11	7.119E+11	6.080E+11	3.780E+11	3.792E+11	3.780E+11	6.080E+11	7.119E+11	7.119E+11	6.135E+11	3.791E+11	3.742E+11
Positive Flexure: Steel Girder + Top Slab/n	A =	mm^2	316,458	327,258	379,778	440,354	440,354	373,778	323,801	326,501	323,801	373,778	440,354	440,354	379,778	327,258	316,458
	d_s =	mm	595.0	617.5	545.7	505.6	505.6	533.8	611.3	616.8	611.3	533.8	505.6	505.6	545.7	617.5	595.0
	I_{NA} =	mm^4	3.742E+11	3.791E+11	4.785E+11	5.810E+11	5.810E+11	4.752E+11	3.780E+11	3.792E+11	3.780E+11	4.752E+11	5.810E+11	5.810E+11	4.785E+11	3.791E+11	3.742E+11
	$d_{TOP\ OF\ STEEL}$	mm	675.0	667.5	744.3	814.4	814.4	751.2	660.7	658.2	660.7	751.2	814.4	814.4	744.3	667.5	675.0
	$d_{BOT\ OF\ STEEL}$	mm	1,865.0	1,887.5	1,825.7	1,795.6	1,795.6	1,813.8	1,881.3	1,886.8	1,881.3	1,813.8	1,795.6	1,795.6	1,825.7	1,887.5	1,865.0
	$S_{TOP\ OF\ STEEL}$	mm^3	5.544E+06	5.680E+06	6.429E+06	7.133E+06	7.133E+06	6.325E+06	5.721E+06	5.760E+06	5.721E+06	6.325E+06	7.133E+06	7.133E+06	6.429E+06	5.680E+06	5.544E+06
	$S_{BOT\ OF\ STEEL}$	mm^3	2.007E+06	2.008E+06	2.621E+06	3.235E+06	3.235E+06	2.620E+06	2.009E+06	2.010E+06	2.009E+06	2.620E+06	3.235E+06	3.235E+06	2.621E+06	2.008E+06	2.007E+06
Negative Flexure: Steel Girder + Top Slab Rebar + Bottom Slab/n	A =	mm^2	169,135	179,935	280,431	341,007	341,007	274,431	174,690	177,390	174,690	274,431	341,007	341,007	280,431	179,935	169,135
	d_s =	mm	-148.2	-62.6	-264.5	-172.4	-172.4	-296.4	-103.1	-82.1	-103.1	-296.4	-172.4	-172.4	-264.5	-62.6	-148.2
	I_{NA} =	mm^4	1.729E+11	1.935E+11	3.236E+11	4.350E+11	4.350E+11	3.088E+11	1.837E+11	1.887E+11	1.837E+11	3.088E+11	4.350E+11	4.350E+11	3.236E+11	1.935E+11	1.729E+11
	$d_{TOP\ OF\ STEEL}$	mm	1,418.2	1,347.6	1,554.5	1,492.4	1,492.4	1,583.4	1,375.1	1,357.1	1,375.1	1,583.4	1,492.4	1,492.4	1,554.5	1,347.6	1,418.2
	$d_{BOT\ OF\ STEEL}$	mm	1,121.8	1,207.4	1,015.5	1,117.6	1,117.6	961.6	1,166.9	1,187.9	1,166.9	961.6	1,117.6	1,117.6	1,015.5	1,207.4	1,121.8
	$S_{TOP\ OF\ STEEL}$	mm^3	1.219E+06	1.436E+06	2.082E+06	2.915E+06	2.915E+06	1.950E+06	1.336E+06	1.391E+06	1.336E+06	1.950E+06	2.915E+06	2.915E+06	2.082E+06	1.436E+06	1.219E+06
	$S_{BOT\ OF\ STEEL}$	mm^3	1.541E+06	1.603E+06	3.186E+06	3.892E+06	3.892E+06	3.146E+06	1.574E+06	1.589E+06	1.574E+06	3.146E+06	3.892E+06	3.892E+06	3.186E+06	1.603E+06	1.541E+06

STRENGTH LIMIT STATE

Positive Flexure (Neglect Top Slab Reinforcement)

Check for Compact Section

Depth From Top of Top Slab to PNA, I mm	756.0	610.5	593.5	439.5	439.5	674.3	667.8	631.4	667.8	674.3	439.5	439.5	593.5	610.5	756.0
	NA within web	NA within web	NA within web	NA within web	NA within web	NA within web	NA within web	NA within web	NA within web	NA within web	NA within web	NA within web	NA within web	NA within web	NA within web
a) Check Ductility Requirement (Article 6.10.5.2.2b)															
Distance Specified in 6.10.5.2.2c, mm	264.5	264.5	265.4	266.3	266.3	265.4	264.5	264.5	264.5	265.4	266.3	266.3	265.4	264.5	264.5
	D'<Dp<5D'	D'<Dp<5D'	D'<Dp<5D'	D'<Dp<5D'	D'<Dp<5D'	D'<Dp<5D'	D'<Dp<5D'	D'<Dp<5D'	D'<Dp<5D'	D'<Dp<5D'	D'<Dp<5D'	D'<Dp<5D'	D'<Dp<5D'	D'<Dp<5D'	D'<Dp<5D'
b) Check Web Slenderness (Article 6.10.5.2.2c)															
Depth of Web in Compression, D_{cw}	442.4	298.9	279.9	125.9	125.9	360.7	354.2	317.8	354.2	360.7	125.9	125.9	279.9	298.9	442.4
$2D_{cw}/t_w$	49.2	33.0	31.1	14.0	14.0	40.1	39.4	35.3	39.4	40.1	14.0	14.0	31.1	33.0	49.2
$3.76\sqrt{E/F_{yc}}$	90.5	90.5	90.5	90.5	90.5	90.5	90.5	90.5	90.5	90.5	90.5	90.5	90.5	90.5	90.5
limit ratio	0.54	0.36	0.34	0.15	0.15	0.44	0.43	0.39	0.43	0.44	0.15	0.15	0.34	0.36	0.54
	compact	compact	compact	compact	compact	compact	compact	compact	compact	compact	compact	compact	compact	compact	compact
c) Check Member Proportions (Article 6.10.1.1)															
Iyc	7.776E+07	1.361E+08	7.200E+08	1.260E+09	1.260E+09	6.300E+08	1.671E+08	1.896E+08	1.671E+08	6.300E+08	1.260E+09	1.260E+09	7.200E+08	1.361E+08	7.776E+07
Iy	2.482E+10	2.488E+10	3.783E+10	5.074E+10	5.074E+10	3.774E+10	2.491E+10	2.493E+10	2.491E+10	3.774E+10	5.074E+10	5.074E+10	3.783E+10	2.488E+10	2.482E+10
	O.K.	O.K.	O.K.	O.K.	O.K.	O.K.	O.K.	O.K.	O.K.	O.K.	O.K.	O.K.	O.K.	O.K.	O.K.
Positive Plastic Moment Capacity, M_p N-m	8.663E+07	8.811E+07	1.100E+08	1.330E+08	1.330E+08	1.093E+08	8.783E+07	8.796E+07	8.783E+07	1.093E+08	1.330E+08	1.330E+08	1.100E+08	8.811E+07	8.663E+07
Yield Moment Positive Composite, M_y N-m	6.923E+07	6.929E+07	9.043E+07	1.116E+08	1.116E+08	9.039E+07	6.932E+07	6.933E+07	6.932E+07	9.039E+07	1.116E+08	1.116E+08	9.043E+07	6.929E+07	6.923E+07
Yield Moment per 6.10.5.1.2, M_y N-m	6.418E+07	6.526E+07	9.303E+07	1.140E+08	1.133E+08	9.073E+07	6.141E+07	5.878E+07	6.141E+07	9.073E+07	1.133E+08	1.140E+08	9.303E+07	6.526E+07	6.418E+07
Nominal Flexural Resistance, M_n N-m	7.372E+07	7.855E+07	9.978E+07	1.268E+08	1.268E+08	9.678E+07	7.668E+07	7.642E+07	7.668E+07	9.678E+07	1.268E+08	1.268E+08	9.978E+07	7.855E+07	7.372E+07
Find Hybrid Factor															
ρ	1.000	1.000	1.000	1.000	1.000	1.000	1.000	1.000	1.000	1.000	1.000	1.000	1.000	1.000	1.000
ψ	0.734	0.739	0.710	0.688	0.688	0.707	0.740	0.741	0.740	0.707	0.688	0.688	0.710	0.739	0.734
β	0.918	0.918	0.610	0.458	0.458	0.610	0.918	0.918	0.918	0.610	0.458	0.458	0.610	0.918	0.918
Positive Flexure Hybrid Factor, R_h	1.000	1.000	1.000	1.000	1.000	1.000	1.000	1.000	1.000	1.000	1.000	1.000	1.000	1.000	1.000

Negative Flexure (Include Top Slab Reinforcement)

Check for Compact Section

Depth From Top of Bottom Slab to PN mm	1011.9	1157.4	730.3	894.2	894.2	649.4	1067.2	1123.6	1067.2	649.4	894.2	894.2	730.3	1157.4	1011.9
	NA within web	NA within web	NA within web	NA within web	NA within web	NA within web	NA within web	NA within web	NA within web	NA within web	NA within web	NA within web	NA within web	NA within web	NA within web
a) Check Web Slenderness (Article 6.10.5.2.2c)															
Depth of Web in Compression, D_{cw}	991.9	1137.4	700.3	854.2	854.2	619.4	1067.2	1103.6	1067.2	619.4	854.2	854.2	700.3	1137.4	991.9
$2D_{cw}/t_w$	110.2	126.4	77.8	94.9	94.9	68.8	118.6	122.6	118.6	68.8	94.9	94.9	77.8	126.4	110.2
$3.76\sqrt{E/F_{yc}}$	90.5	90.5	90.5	90.5	90.5	90.5	90.5	90.5	90.5	90.5	90.5	90.5	90.5	90.5	90.5
limit ratio	1.22	1.40	0.86	1.05	1.05	0.76	1.31	1.35	1.31	0.76	1.05	1.05	0.86	1.40	1.22
b) Check Compression Flange Slenderness															
$b_f/2_d$	61.4	61.4	41.0	30.7	30.7	41.0	61.4	61.4	61.4	41.0	30.7	30.7	41.0	61.4	61.4
$0.382\sqrt{E/F_{yc}}$	9.2	9.2	9.2	9.2	9.2	9.2	9.2	9.2	9.2	9.2	9.2	9.2	9.2	9.2	9.2
limit ratio	6.68	6.68	0.00	0.00	0.00	0.00	6.68	6.68	6.68	0.00	0.00	0.00	0.00	6.68	6.68
c) Check Slenderness Interaction															
$2D_{cw}/t_w+9.35b_f/2_d$	684.7	700.8	460.8	382.1	382.1	451.8	693.0	697.1	693.0	451.8	382.1	382.1	460.8	700.8	684.7
$6.25\sqrt{E/F_{yc}}$	150.5	150.5	150.5	150.5	150.5	150.5	150.5	150.5	150.5	150.5	150.5	150.5	150.5	150.5	150.5
limit ratio	4.55	4.66	0.00	0.00	0.00	0.00	4.61	4.63	4.61	0.00	0.00	0.00	0.00	4.66	4.55
NOTE: THIS IS NEGLECTED DUE TO SLAB STIF	non-compact	non-compact	compact	non-compact	non-compact	compact	non-compact	non-compact	non-compact	compact	non-compact	non-compact	compact	non-compact	non-compact
Negative Plastic Moment Capacity N-m	5.484E+07	6.009E+07	8.995E+07	1.189E+08	1.189E+08	8.608E+07	5.752E+07	5.886E+07	5.752E+07	8.608E+07	1.189E+08	1.189E+08	8.995E+07	6.009E+07	5.484E+07
Nominal Flexural Resistance, Mn N-m	0.000E+00	0.000E+00	8.995E+07	0.000E+00	0.000E+00	8.608E+07	0.000E+00	0.000E+00	0.000E+00	8.608E+07	0.000E+00	0.000E+00	8.995E+07	0.000E+00	0.000E+00
Find Hybrid Factor															
ρ	1.000	1.000	1.000	1.000	1.000	1.000	1.000	1.000	1.000	1.000	1.000	1.000	1.000	1.000	1.000
β	12.500	7.143	3.750	2.143	2.143	4.286	9.091	8.000	9.091	4.286	2.143	2.143	3.750	7.143	12.500
Negative Flexure Hybrid Factor, R_h	1.000	1.000	1.000	1.000	1.000	1.000	1.000	1.000	1.000	1.000	1.000	1.000	1.000	1.000	1.000

LIVE-LOAD LATERAL BENDING MOMENT DISTRIBUTION FACTORS

Interior Girder		SPAN 1				SPAN 2							SPAN 3			
I_L =	mm	3	3	3	3	3	3	3	3	3	3	3	3	3	3	3
I_s =	mm⁴	3	2	2	2	3	2	2	2	2	2	2	2	2	2	2
I_L / I_s =		1.50	1.50	1.50	1.50	1.50	1.50	1.50	1.50	1.50	1.50	1.50	1.50	1.50	1.50	1.50
Positive Moment Distribution Factor																
Maximum any number of lanes loaded		1.467	1.467	1.467	1.467	1.467	1.467	1.467	1.467	1.467	1.467	1.467	1.467	1.467	1.467	1.467
Negative Moment Distribution Factor																
Maximum any number of lanes loaded		1.467	1.467	1.467	1.467	1.467	1.467	1.467	1.467	1.467	1.467	1.467	1.467	1.467	1.467	1.467

LOAD COMBINATIONS

Fy = 345.00

			F	G	H	I	J	K	L	M
			DC₁ DL	DC₂ DL	DC₃ DL	DW DL	LL Envelope (Lane Load)		LL Envelope (Girder Load)	
			Moment	Moment	Moment	Moment	Min Moment	Max Moment	Min Moment	Max Moment
	X1	X2	(N-m)	(N-m)	(N-m)	(N-m)	(N)	(N-m)	(N)	(N-m)
0.00	0.0	2.7	0.00E+00	0.00E+00	0.00E+00	0.00E+00	0.00E+00	0.00E+00	0.00E+00	0.00E+00
13.50	13.0	15.2	2.04E+06	6.79E+06	1.01E+06	1.00E+06	-2.72E+06	6.66E+06	-3.30E+06	1.01E+07
13.50	13.0	15.2	2.04E+06	6.79E+06	1.01E+06	1.00E+06	-2.72E+06	6.66E+06	-3.30E+06	1.01E+07
30.17	28.2	30.3	1.88E+06	6.08E+06	9.36E+05	1.01E+06	-4.64E+06	9.36E+06	-6.00E+06	1.37E+07
51.30	49.0	52.0	-4.61E+06	-1.24E+07	-1.64E+06	-1.83E+06	-1.04E+07	4.96E+06	-1.53E+07	6.66E+06
51.30	49.5	52.0	-4.51E+06	-1.24E+07	-1.64E+06	-1.83E+06	-1.04E+07	4.96E+06	-1.53E+07	6.66E+06
56.00	54.5	60.7	-6.30E+06	-2.29E+07	-3.10E+06	-3.44E+06	-1.27E+07	2.11E+06	-1.88E+07	3.00E+06
56.00	54.5	60.7	-6.30E+06	-2.29E+07	-3.10E+06	-3.44E+06	-1.27E+07	2.11E+06	-1.88E+07	3.00E+06
65.00	62.0	66.0	-1.27E+07	-3.32E+07	-4.08E+06	-5.06E+06	-1.64E+07	1.91E+06	-2.27E+07	2.60E+06
0.00	0.0	3.3	-1.27E+07	-3.32E+07	-4.07E+06	-5.06E+06	-1.64E+07	1.91E+06	-2.27E+07	2.60E+06
9.00	8.7	10.0	-6.63E+06	-1.71E+07	-2.34E+06	-2.53E+06	-8.30E+06	2.17E+06	-1.23E+07	3.19E+06
9.00	6.7	10.0	-6.63E+06	-1.71E+07	-2.34E+06	-2.53E+06	-8.30E+06	2.17E+06	-1.23E+07	3.19E+06
19.50	16.7	20.0	-1.51E+06	-2.30E+06	-1.96E+05	-2.11E+05	-6.23E+06	4.96E+06	-7.66E+06	7.30E+06
19.50	16.7	20.0	-1.51E+06	-2.30E+06	-1.96E+05	-2.11E+05	-6.23E+06	4.96E+06	-7.66E+06	7.30E+06
34.50	33.3	36.7	4.13E+06	1.13E+07	1.77E+06	1.91E+06	-3.10E+06	9.63E+06	-4.00E+06	1.41E+07
34.50	33.3	36.7	4.13E+06	1.13E+07	1.77E+06	1.91E+06	-3.10E+06	9.63E+06	-4.00E+06	1.41E+07
50.00	50.0	53.3	5.73E+06	1.61E+07	2.40E+06	2.60E+06	-3.56E+06	1.16E+07	-3.79E+06	1.70E+07
65.50	63.3	66.7	4.13E+06	1.13E+07	1.77E+06	1.91E+06	-3.10E+06	9.63E+06	-4.00E+06	1.41E+07
65.50	63.3	66.7	4.13E+06	1.13E+07	1.77E+06	1.91E+06	-3.10E+06	9.63E+06	-4.00E+06	1.41E+07
80.50	80.0	83.3	-1.51E+06	-2.30E+06	-1.96E+05	-2.11E+05	-6.27E+06	4.96E+06	-7.66E+06	7.30E+06
80.50	80.0	83.3	-1.51E+06	-2.30E+06	-1.96E+05	-2.11E+05	-6.27E+06	4.96E+06	-7.66E+06	7.30E+06
91.00	90.0	93.3	-6.63E+06	-1.71E+07	-2.34E+06	-2.53E+06	-8.30E+06	2.17E+06	-1.23E+07	3.19E+06
91.00	90.0	93.3	-6.63E+06	-1.71E+07	-2.34E+06	-2.53E+06	-8.30E+06	2.17E+06	-1.23E+07	3.19E+06
100.00	96.7	100.0	-1.27E+07	-3.32E+07	-4.08E+06	-5.06E+06	-1.64E+07	1.91E+06	-2.27E+07	2.60E+06
0.00	0.0	3.3	-1.27E+07	-3.32E+07	-4.07E+06	-5.06E+06	-1.64E+07	1.91E+06	-2.27E+07	2.60E+06
0.70	4.3	6.5	-6.30E+06	-2.29E+07	-3.10E+06	-3.44E+06	-1.27E+07	2.11E+06	-1.88E+07	3.00E+06
0.70	4.3	6.5	-6.30E+06	-2.29E+07	-3.10E+06	-3.44E+06	-1.27E+07	2.11E+06	-1.88E+07	3.00E+06
13.70	13.0	15.2	-4.51E+06	-1.24E+07	-1.64E+06	-1.83E+06	-1.04E+07	4.96E+06	-1.53E+07	6.66E+06
13.70	13.0	15.2	-4.51E+06	-1.24E+07	-1.64E+06	-1.83E+06	-1.04E+07	4.96E+06	-1.53E+07	6.66E+06
30.43	28.0	30.0	1.88E+06	6.08E+06	9.36E+05	1.01E+06	-4.64E+06	9.36E+06	-6.00E+06	1.37E+07
51.90	49.0	52.0	2.04E+06	6.79E+06	1.01E+06	1.00E+06	-2.72E+06	6.66E+06	-3.30E+06	1.01E+07
51.90	49.0	52.0	2.04E+06	6.79E+06	1.01E+06	1.00E+06	-2.72E+06	6.66E+06	-3.30E+06	1.01E+07
66.00	62.0	66.0	2.29E-03	7.77E-03	1.07E-03	1.10E-03	-1.08E-03	6.64E-03	-2.41E-03	3.03E-03

x	Strength I Moment (M_u)		Strength IV Moment (M_u)		Yield Mom.	M_u/M_n	
	Min Moment	Max Moment	Min Moment	Max Moment	M_y	Min Moment	Max Moment
	(N-m)	(N-m)	(N-m)	(N-m)	(N-m)		
0.00	0.000E+00	0.000E+00	0.000E+00	0.000E+00	5.623E+07	0.00	0.00
13.50	7.621E+06	3.000E+07	1.567E+07	1.567E+07	6.410E+07	0.41	0.11
13.50	7.621E+06	3.000E+07	1.567E+07	1.567E+07	6.520E+07	0.34	0.10
30.17	4.430E+06	3.457E+07	1.301E+07	1.301E+07	8.574E+07	0.44	0.01
51.30	-4.904E+07	-1.300E+07	-2.900E+07	-2.900E+07	7.701E+07	non-compact	non-compact
51.30	-4.904E+07	-1.300E+07	-2.900E+07	-2.900E+07	9.303E+07	0.16	0.56
56.00	-7.000E+07	-4.000E+07	-6.300E+07	-6.300E+07	9.520E+07	0.45	0.00
56.00	-7.000E+07	-4.000E+07	-6.300E+07	-6.300E+07	1.100E+08	non-compact	non-compact
65.00	-1.000E+08	-6.300E+07	-7.933E+07	-7.933E+07	1.153E+08	non-compact	non-compact
0.00	-1.000E+08	-6.300E+07	-7.933E+07	-7.933E+07	1.153E+08	non-compact	non-compact
9.00	-6.300E+07	-3.000E+07	-3.934E+07	-3.934E+07	1.123E+08	non-compact	non-compact
9.00	-6.300E+07	-3.000E+07	-3.934E+07	-3.934E+07	9.441E+07	0.33	0.63
19.50	-1.610E+07	6.634E+06	-4.079E+06	-4.079E+06	9.973E+07	0.00	0.19
19.50	-1.610E+07	6.634E+06	-4.079E+06	-4.079E+06	7.063E+07	0.11	non-compact
34.50	1.949E+07	4.000E+07	2.772E+07	2.772E+07	6.141E+07	0.01	0.30
34.50	1.949E+07	4.000E+07	2.772E+07	2.772E+07	6.184E+07	0.61	0.30
50.00	2.630E+07	6.000E+07	3.038E+07	3.038E+07	6.079E+07	0.80	0.36
65.50	1.949E+07	4.000E+07	2.772E+07	2.772E+07	6.164E+07	0.01	0.30
65.50	1.949E+07	4.000E+07	2.772E+07	2.772E+07	6.141E+07	0.61	0.30
80.50	-1.610E+07	6.634E+06	-4.079E+06	-4.079E+06	7.061E+07	0.11	non-compact
80.50	-1.610E+07	6.634E+06	-4.079E+06	-4.079E+06	9.073E+07	0.00	0.19
91.00	-6.300E+07	-3.000E+07	-3.934E+07	-3.934E+07	9.441E+07	0.33	0.63
91.00	-6.300E+07	-3.000E+07	-3.934E+07	-3.934E+07	1.133E+08	non-compact	non-compact
100.00	-1.000E+08	-6.300E+07	-7.933E+07	-7.933E+07	1.153E+08	non-compact	non-compact
0.00	-1.000E+08	-6.300E+07	-7.933E+07	-7.933E+07	1.163E+08	non-compact	non-compact
0.70	-7.000E+07	-4.000E+07	-6.300E+07	-6.300E+07	1.140E+08	non-compact	non-compact
0.70	-7.000E+07	-4.000E+07	-6.300E+07	-6.300E+07	9.534E+07	0.46	0.00
13.70	-4.904E+07	-1.300E+07	-2.900E+07	-2.900E+07	9.303E+07	0.19	0.00
13.70	-4.904E+07	-1.300E+07	-2.900E+07	-2.900E+07	7.701E+07	non-compact	non-compact
30.43	4.430E+06	3.457E+07	1.301E+07	1.301E+07	8.574E+07	0.44	0.01
51.90	7.621E+06	3.000E+07	1.567E+07	1.567E+07	6.520E+07	0.39	0.10
51.90	7.621E+06	3.000E+07	1.567E+07	1.567E+07	6.410E+07	0.41	0.11
66.00	1.010E-02	3.010E-02	1.000E-02	1.000E-02	6.093E+07	0.00	0.00

x	Ultimate I Stresses (MPa)		Ultimate I Stresses (MPa)		Service II Stresses (MPa)		Service II Stresses (MPa)		f_{bu} / $R_h F_{yf}$	f_{bu} / $R_h F_{yf}$
	Min Moment		Max Moment		Min Moment		Max Moment		top flange	bot flange
	$f_{b,top}$	$f_{b,bottom}$	$f_{b,top}$	$f_{b,bottom}$	$f_{b,top}$	$f_{b,bottom}$	$f_{b,top}$	$f_{b,bottom}$	ratio	ratio
0.00	0.00	0.00	0.00	0.00	0.00	0.00	0.00	0.00	0.00	0.00
13.50	88.16	86.00	160.01	174.60	74.77	40.65	132.00	140.47	0.40	0.43
13.50	66.31	52.21	136.56	160.40	64.93	44.79	111.50	135.49	0.34	0.42
30.17	14.8	5.7	133.7	160.6	16.4	7.8	100.4	151.9	0.33	0.46
51.30	306.07	321.00	194.36	160.80	-316.36	-300.38	-162.31	-62.72	0.96	0.79
51.30	203.42	183.34	134.62	81.50	-212.01	-144.10	-164.37	-62.90	0.66	0.46
56.00	412.04	300.90	266.75	172.43	-374.09	-230.60	-212.46	-144.52	1.42	0.72
56.00	353.77	230.31	170.60	133.11	-230.20	-186.36	-141.76	-110.91	0.70	0.57
65.00	300.75	316.00	256.00	304.87	-317.77	-257.10	-211.62	-170.26	0.97	0.76
0.00	300.75	316.02	266.00	304.87	-317.77	-257.10	-211.62	-170.26	0.97	0.76
9.00	190.80	191.00	122.73	82.05	-162.34	-130.86	-101.62	-76.93	0.80	0.49
9.00	312.05	307.40	160.33	132.56	-264.33	-160.10	-165.72	-102.41	0.76	0.52
19.50	88.74	94.07	7.40	30.67	-40.00	-43.01	-2.90	20.02	0.71	0.13
19.50	138.43	164.47	12.18	36.30	-100.11	-42.00	-11.16	27.20	0.31	0.36
34.50	146.35	165.03	246.38	271.74	126.16	80.79	200.00	215.00	0.62	0.67
34.50	136.84	163.80	230.00	300.02	116.46	80.30	153.94	217.34	0.58	0.66
50.00	320.01	175.80	300.23	306.00	182.50	146.80	200.27	267.61	0.81	0.86
65.50	130.94	163.90	230.00	300.02	116.46	80.30	153.94	217.34	0.80	0.66
65.50	146.36	166.03	246.38	271.74	126.96	80.79	202.00	215.00	0.62	0.67
80.50	138.43	164.47	12.10	30.30	-100.11	-42.00	-11.16	27.20	0.31	0.36
80.50	88.74	94.67	7.40	31.62	-40.00	-43.01	-2.90	20.02	0.71	0.13
91.00	312.05	307.00	160.33	177.96	-264.33	-160.10	-165.72	-102.41	0.76	0.52
91.00	190.80	161.00	122.33	82.06	-162.34	-130.86	-161.62	-76.93	0.80	0.49
100.00	300.75	316.00	256.00	304.87	-317.77	-257.10	-211.62	-170.26	0.97	0.76
0.00	300.75	310.02	256.00	304.87	-317.77	-257.10	-211.62	-170.26	0.97	0.76
0.70	353.77	226.31	170.60	133.11	-230.20	-186.36	-141.76	-110.91	0.70	0.57
0.70	412.04	300.90	266.75	172.43	-374.09	-230.60	-212.46	-144.52	1.00	0.72
13.70	203.03	183.34	134.62	81.50	-212.01	-144.10	-164.37	-62.90	0.66	0.46
13.70	306.07	321.00	194.36	160.80	-316.30	-300.30	-162.31	-62.72	0.96	0.79
30.43	14.80	5.66	133.74	160.64	16.42	7.80	100.40	151.98	0.33	0.46
51.90	66.31	52.21	136.56	160.40	64.93	44.79	111.50	135.49	0.34	0.42
51.90	88.16	86.00	160.01	174.80	74.77	40.65	132.00	140.47	0.40	0.43
66.00	0.00	0.00	0.00	0.00	0.00	0.00	0.00	0.00	0.00	0.00

Appendix G

Double Composite Hybrid Plate Girder Bridge Design Calculations

COMPOSITE STEEL GIRDER BRIDGE - USF STUDY

MATERIAL PROPERTIES

Steel Modulus of Elasticity =	200000	MPa
Concrete Modulus of Elasticity =	30	MPa
Density of Steel =	77000	N/m3
Density of Concrete =	23600	N/m3
Short Term Modular Ratio =	8	
Long Term Modular Ratio =	24	
Top Flange Steel Yield Stress =	345	MPa
Web Steel Yield Stress =	345	MPa
Bottom Web Steel Yield Stress =	345	MPa
Reinforcement Yield Stress =	420	MPa
Concrete Strength =	30	MPa

ADDITIONAL LOADING REQUIREMENTS

Stay in Place Forms =	1000	N/m2
Future Wearing Surface =	1000	N/m2
Traffic Barries (each) =	5700	N/m

Additional Loads per Girder

Stay in Place Forms =	6166	N/m
Future Wearing Surface =	6166	N/m
Traffic Barries =	5700	N/m

Design Requirements

b =	0.7	

GIRDER INFORMATION

Number of Lanes =	3	
Number of Girders =	2	
Spacing Between Girders =	3657.6	mm
Bridge Roadway Width =	12331.2	mm
Top Slab Thickness =	228.6	mm
Bottom Slab Thickness =	177.8	mm
Number of Spans =	3	
Span Length 1 =	65	m
Span Length 2 =	100	m
Span Length 3 =	65	m
Width of OverHang =	1219.2	mm

L1 =	41.577
L2 =	
L3 =	

DOUBLE COMPOSITE STEEL I GIRDER BRIDGE DESIGN

		SPAN 1				SPAN 2							SPAN 3				
Section Length, m		13.5	37.8	7.5	6.2	9	10.5	15	31	15	10.5	9	6.2	7.5	37.8	13.5	
Section Start, m		0.0	13.5	51.3	58.8	0.0	9.0	19.5	34.5	65.5	80.5	91.0	0.0	6.2	13.7	51.5	
Section End, m		13.5	51.3	58.8	65.0	9.0	19.5	34.5	65.5	80.5	91.0	100.0	6.2	13.7	51.5	65.0	
I Steel Girder																	
Top Flange Thickness, t_{tf}	mm	20	35	60	75	75	35	20	25	20	35	75	75	60	35	20	
Top Flange Width, b_{tf}	mm	350	350	400	450	450	450	400	400	400	450	450	450	400	350	350	
Web Thickness, t_w	mm	18	18	18	18	18	18	18	18	18	18	18	18	18	18	18	
Web Depth, d_w	mm	2500	2500	2500	2500	2500	2500	2500	2500	2500	2500	2500	2500	2500	2500	2500	
Bottom Flange Thickness, t_{bf}	mm	20	35	65	80	75	35	35	35	35	35	75	80	65	35	20	
Bottom Flange Width, b_{bf}	mm	350	400	400	450	450	450	400	400	400	450	450	450	400	400	350	
A_{girder} =	mm^2	59,000	71,250	95,000	114,750	112,500	76,500	67,000	69,000	67,000	76,500	112,500	114,750	95,000	71,250	59,000	
$y_{cg\ girder}$ =	mm	0.00	-31.13	-27.63	-26.03	0.00	0.00	-114.40	-74.20	-114.40	0.00	0.00	-26.03	-27.63	-31.13	0.00	
$I_{cg\ girder}$ =	mm^4	4.566E+10	6.554E+10	1.055E+11	1.392E+11	1.354E+11	7.405E+10	5.775E+10	6.149E+10	5.775E+10	7.405E+10	1.354E+11	1.392E+11	1.055E+11	6.554E+10	4.566E+10	
Concrete Slabs																	
Top Concrete Slab																	
Distance Top of Web/Concrete Bottom	mm	85	85	85	85	85	85	85	85	85	85	85	85	85	85	85	
Effective Slab Width, b_{ts}	mm	2918.2	2918.2	2943.2	2968.2	2968.2	2968.2	2943.2	2943.2	2943.2	2968.2	2968.2	2968.2	2943.2	2918.2	2918.2	
Slab Thickness, t_{ts}	mm	228.6	228.6	228.6	228.6	228.6	228.6	228.6	228.6	228.6	228.6	228.6	228.6	228.6	228.6	228.6	
$A_{top\ slab}$ =	mm^2	667,101	667,101	672,816	678,531	678,531	678,531	672,816	672,816	672,816	678,531	678,531	678,531	672,816	667,101	667,101	
$y_{cg\ top\ slab}$ =	mm	1449.3	1449.3	1449.3	1449.3	1449.3	1449.3	1449.3	1449.3	1449.3	1449.3	1449.3	1449.3	1449.3	1449.3	1449.3	
$I_{cg\ top\ slab}$ =	mm^4	2.905E+09	2.905E+09	2.930E+09	2.955E+09	2.955E+09	2.955E+09	2.930E+09	2.930E+09	2.930E+09	2.955E+09	2.955E+09	2.955E+09	2.930E+09	2.905E+09	2.905E+09	
Top Concrete Slab Reinforcement																	
Reinforcement Area	% concrete	1.00%	1.00%	1.00%	1.00%	1.00%	1.00%	1.00%	1.00%	1.00%	1.00%	1.00%	1.00%	1.00%	1.00%	1.00%	
Top Layer Reinforcement	% steel	2/3	2/3	2/3	2/3	2/3	2/3	2/3	2/3	2/3	2/3	2/3	2/3	2/3	2/3	2/3	
Bottom Layer Reinforcement	% steel	1/3	1/3	1/3	1/3	1/3	1/3	1/3	1/3	1/3	1/3	1/3	1/3	1/3	1/3	1/3	
Distance Top of Slab/CG Top Rebar	mm	76.2	76.2	76.2	76.2	76.2	76.2	76.2	76.2	76.2	76.2	76.2	76.2	76.2	76.2	76.2	
Distance Top of Slab/CG Bottom Rebar	mm	152.4	152.4	152.4	152.4	152.4	152.4	152.4	152.4	152.4	152.4	152.4	152.4	152.4	152.4	152.4	
A_{rebar} =	mm^2	6,671	6,671	6,728	6,785	6,785	6,785	6,728	6,728	6,728	6,785	6,785	6,785	6,728	6,671	6,671	
$y_{cg\ rebar}$ =	mm	1,462.0	1,462.0	1,462.0	1,462.0	1,462.0	1,462.0	1,462.0	1,462.0	1,462.0	1,462.0	1,462.0	1,462.0	1,462.0	1,462.0	1,462.0	
Bottom Concrete Slab																	
Include Bottom Concrete Slab in Section?	Y or N	N	N	Y	Y	Y	Y	N	N	N	Y	Y	Y	Y	N	N	
Distance Bottom of Web/Concrete Bottom	mm	0	0	0	0	0	0	0	0	0	0	0	0	0	0	0	
Effective Slab Width, b_{bs}	mm	0	0	2166.1	2173.6	2171.1	2151.1	0	0	0	2151.1	2171.1	2173.6	2166.1	0	0	
Slab Thickness, t_{bs}	mm	0	0	177.8	177.8	177.8	177.8	0	0	0	177.8	177.8	177.8	177.8	0	0	
$A_{bot\ slab}$ =	mm^2	0	0	385,133	386,466	386,022	382,466	0	0	0	382,466	386,022	386,466	385,133	0	0	
$y_{cg\ bot\ slab}$ =	mm	-1,250.0	-1,250.0	-1,161.1	-1,161.1	-1,161.1	-1,161.1	-1,250.0	-1,250.0	-1,250.0	-1,161.1	-1,161.1	-1,161.1	-1,161.1	-1,250.0	-1,250.0	
$I_{cg\ bot\ slab}$ =	mm^4	0.000E+00	0.000E+00	1.015E+09	1.018E+09	1.017E+09	1.008E+09	0.000E+00	0.000E+00	0.000E+00	1.008E+09	1.017E+09	1.018E+09	1.015E+09	0.000E+00	0.000E+00	
Steel Weight per Section																	
Top Flange	kg	742	3635	1413	1642	2384	1298	942	2433	942	1298	2384	1642	1413	3635	742	26545
Web	kg	4768	13351	2649	2190	3179	3709	5298	10950	5298	3709	3179	2190	2649	13351	4768	81239
Bot Flange	kg	742	4154	1531	1752	2384	1298	1648	3407	1648	1298	2384	1752	1531	4154	742	30424
Total		6252	21140	5593	5584	7947	6305	7888	16789	7888	6305	7947	5584	5593	21140	6252	138207

ELASTIC SECTION PROPERTIES AND LOADING CONDITIONS

1. Section: Steel Girder - Loading: DC_0 (Steel Girder+Bottom Slab w/ Forms)																	
Loading	w_{girder} =	N/m	4,543	5,487	7,315	8,836	8,663	5,891	5,159	5,313	5,159	5,891	8,663	8,836	7,315	5,487	4,543
	$w_{bot\ slab}$ =	N/m	0	0	19,006	19,006	19,006	19,006	0	0	0	19,006	19,006	19,006	19,006	0	0
	w_{DC0} =	N/m	4,543	5,487	26,321	27,842	27,669	24,897	5,159	5,313	5,159	24,897	27,669	27,842	26,321	5,487	4,543
Total Section Possitive Flexure & Negative Flexure	A =	mm^2	59,000	71,250	95,000	114,750	112,500	76,500	67,000	69,000	67,000	76,500	112,500	114,750	95,000	71,250	59,000
	d_s =	mm	0.00	-31.13	-27.63	-26.03	0.00	0.00	-114.40	-74.20	-114.40	0.00	0.00	-26.03	-27.63	-31.13	0.00
	I_{NA} =	mm^4	4.566E+10	6.554E+10	1.055E+11	1.392E+11	1.354E+11	7.405E+10	5.775E+10	6.149E+10	5.775E+10	7.405E+10	1.354E+11	1.392E+11	1.055E+11	6.554E+10	4.566E+10
	$d_{TOP\ OF\ STEEL}$ =	mm	1,270.0	1,316.1	1,337.6	1,351.0	1,325.0	1,285.0	1,384.4	1,349.2	1,384.4	1,285.0	1,325.0	1,351.0	1,337.6	1,316.1	1,270.0
	$d_{BOT\ OF\ STEEL}$ =	mm	1,270.0	1,253.9	1,287.4	1,304.0	1,325.0	1,285.0	1,170.6	1,210.8	1,170.6	1,285.0	1,325.0	1,304.0	1,287.4	1,253.9	1,270.0
	$S_{TOP\ OF\ STEEL}$ =	mm^3	3.596E+07	4.980E+07	7.885E+07	1.031E+08	1.022E+08	5.762E+07	4.172E+07	4.558E+07	4.172E+07	5.762E+07	1.022E+08	1.031E+08	7.885E+07	4.980E+07	3.596E+07
	$S_{BOT\ OF\ STEEL}$ =	mm^3	3.596E+07	5.227E+07	8.193E+07	1.068E+08	1.022E+08	5.762E+07	4.934E+07	5.079E+07	4.934E+07	5.762E+07	1.022E+08	1.068E+08	8.193E+07	5.227E+07	3.596E+07
2. Section: Steel Girder + Bottom Slab/3n - Loading: DC_1 (Top Slab w/ Forms)																	
Loading	w_{DC1} =	N/m	23,391	23,391	23,391	23,391	23,391	23,391	23,391	23,391	23,391	23,391	23,391	23,391	23,391	23,391	23,391
Total Section	A =	mm^2	59,000	71,250	111,047	130,853	128,584	92,436	67,000	69,000	67,000	92,436	128,584	130,853	111,047	71,250	59,000
	d_s =	mm	0.00	-31.13	-191.43	-165.71	-145.24	-200.17	-114.40	-74.20	-114.40	-200.17	-145.24	-165.71	-191.43	-31.13	0.00
	I_{NA} =	mm^4	4.566E+10	6.554E+10	1.231E+11	1.575E+11	1.544E+11	9.187E+10	5.775E+10	6.149E+10	5.775E+10	9.187E+10	1.544E+11	1.575E+11	1.231E+11	6.554E+10	4.566E+10
Possitive Flexure: Steel Girder	A =	mm^2	59,000	71,250	95,000	114,750	112,500	76,500	67,000	69,000	67,000	76,500	112,500	114,750	95,000	71,250	59,000
	d_s =	mm	0.00	-31.13	-27.63	-26.03	0.00	0.00	-114.40	-74.20	-114.40	0.00	0.00	-26.03	-27.63	-31.13	0.00
	I_{NA} =	mm^4	4.57E+10	6.55E+10	1.05E+11	1.39E+11	1.35E+11	7.40E+10	5.78E+10	6.15E+10	5.78E+10	7.40E+10	1.35E+11	1.39E+11	1.05E+11	6.55E+10	4.57E+10
	$d_{TOP\ OF\ STEEL}$ =	mm	1,270.0	1,316.1	1,337.6	1,351.0	1,325.0	1,285.0	1,384.4	1,349.2	1,384.4	1,285.0	1,325.0	1,351.0	1,337.6	1,316.1	1,270.0
	$d_{BOT\ OF\ STEEL}$ =	mm	1,270.0	1,253.9	1,287.4	1,304.0	1,325.0	1,285.0	1,170.6	1,210.8	1,170.6	1,285.0	1,325.0	1,304.0	1,287.4	1,253.9	1,270.0
	$S_{TOP\ OF\ STEEL}$ =	mm^3	3.596E+07	4.980E+07	7.885E+07	1.031E+08	1.022E+08	5.762E+07	4.172E+07	4.558E+07	4.172E+07	5.762E+07	1.022E+08	1.031E+08	7.885E+07	4.980E+07	3.596E+07
	$S_{BOT\ OF\ STEEL}$ =	mm^3	3.596E+07	5.227E+07	8.193E+07	1.068E+08	1.022E+08	5.762E+07	4.934E+07	5.079E+07	4.934E+07	5.762E+07	1.022E+08	1.068E+08	8.193E+07	5.227E+07	3.596E+07
Negative Flexure: Steel Girder + Bottom Slab/3n	A =	mm^2	59,000	71,250	111,047	130,853	128,584	92,436	67,000	69,000	67,000	92,436	128,584	130,853	111,047	71,250	59,000
	d_s =	mm	0.00	-31.13	-191.43	-165.71	-145.24	-200.17	-114.40	-74.20	-114.40	-200.17	-145.24	-165.71	-191.43	-31.13	0.00
	I_{NA} =	mm^4	4.566E+10	6.554E+10	1.231E+11	1.575E+11	1.544E+11	9.187E+10	5.775E+10	6.149E+10	5.775E+10	9.187E+10	1.544E+11	1.575E+11	1.231E+11	6.554E+10	4.566E+10
	$d_{TOP\ OF\ STEEL}$ =	mm	1,270.0	1,316.1	1,501.4	1,490.7	1,470.2	1,485.2	1,384.4	1,349.2	1,384.4	1,485.2	1,470.2	1,490.7	1,501.4	1,316.1	1,270.0
	$d_{BOT\ OF\ STEEL}$ =	mm	1,270.0	1,253.9	1,123.6	1,164.3	1,179.8	1,084.8	1,170.6	1,210.8	1,170.6	1,084.8	1,179.8	1,164.3	1,123.6	1,253.9	1,270.0
	$S_{TOP\ OF\ STEEL}$ =	mm^3	3.596E+07	4.980E+07	8.202E+07	1.056E+08	1.050E+08	6.186E+07	4.172E+07	4.558E+07	4.172E+07	6.186E+07	1.050E+08	1.056E+08	8.202E+07	4.980E+07	3.596E+07
	$S_{BOT\ OF\ STEEL}$ =	mm^3	3.596E+07	5.227E+07	1.096E+08	1.353E+08	1.309E+08	8.469E+07	4.934E+07	5.079E+07	4.934E+07	8.469E+07	1.309E+08	1.353E+08	1.096E+08	5.227E+07	3.596E+07
3. Section: Steel Section + Bottom Slab/3n + Top Slab/3n + Top Slab Longitudinal Reinforcement - Loading: DC_2 (Barriers) & DW (Wearing Surface)																	
Loading	w_{DC2} =	N/m	2,850	2,850	2,850	2,850	2,850	2,850	2,850	2,850	2,850	2,850	2,850	2,850	2,850	2,850	2,850
	w_{DW} =	N/m	3,083	3,083	3,083	3,083	3,083	3,083	3,083	3,083	3,083	3,083	3,083	3,083	3,083	3,083	3,083
Total Section	A =	mm^2	86,796	99,046	139,081	159,125	156,856	120,708	95,034	97,034	95,034	120,708	156,856	159,125	139,081	99,046	86,796
	d_s =	mm	464.13	384.33	139.29	121.23	142.16	186.16	346.87	365.95	346.87	186.16	142.16	121.23	139.29	384.33	464.13
	I_{NA} =	mm^4	8.547E+10	1.095E+11	1.835E+11	2.182E+11	2.134E+11	1.509E+11	1.062E+11	1.079E+11	1.062E+11	1.509E+11	2.134E+11	2.182E+11	1.835E+11	1.095E+11	8.547E+10
Possitive Flexure: Steel Girder + Top Slab/3n	A =	mm^2	86,796	99,046	123,034	143,022	140,772	104,772	95,034	97,034	95,034	104,772	140,772	143,022	123,034	99,046	86,796
	d_s =	mm	464.1	384.3	308.9	265.6	291.1	391.1	346.9	366.0	346.9	391.1	291.1	265.6	308.9	384.3	464.1
	I_{NA} =	mm^4	8.55E+10	1.09E+11	1.53E+11	1.89E+11	1.83E+11	1.18E+11	1.06E+11	1.08E+11	1.06E+11	1.18E+11	1.83E+11	1.89E+11	1.53E+11	1.09E+11	8.55E+10
	$d_{TOP\ OF\ STEEL}$ =	mm	805.9	900.7	1,001.1	1,059.4	1,033.9	893.9	923.1	909.0	923.1	893.9	1,033.9	1,059.4	1,001.1	900.7	805.9
	$d_{BOT\ OF\ STEEL}$ =	mm	1,734.1	1,669.3	1,623.9	1,595.6	1,616.1	1,676.1	1,631.9	1,651.0	1,631.9	1,676.1	1,616.1	1,595.6	1,623.9	1,669.3	1,734.1
	$S_{TOP\ OF\ STEEL}$ =	mm^3	1.061E+08	1.216E+08	1.526E+08	1.782E+08	1.769E+08	1.315E+08	1.150E+08	1.187E+08	1.150E+08	1.315E+08	1.769E+08	1.782E+08	1.526E+08	1.216E+08	1.061E+08
	$S_{BOT\ OF\ STEEL}$ =	mm^3	4.929E+07	6.559E+07	9.410E+07	1.183E+08	1.132E+08	7.012E+07	6.508E+07	6.535E+07	6.508E+07	7.012E+07	1.132E+08	1.183E+08	9.410E+07	6.559E+07	4.929E+07
Negative Flexure: Steel Girder + Top Slab Rebar + Bottom Slab/3n	A =	mm^2	65,671	77,921	117,775	137,638	135,370	99,221	73,728	75,728	73,728	99,221	135,370	137,638	117,775	77,921	65,671
	d_s =	mm	148.51	96.70	-96.97	-85.47	-64.68	-86.51	29.45	62.28	29.45	-86.51	-64.68	-85.47	-96.97	96.70	148.51
	I_{NA} =	mm^4	5.847E+10	7.914E+10	1.405E+11	1.746E+11	1.710E+11	1.093E+11	7.295E+10	7.596E+10	7.295E+10	1.093E+11	1.710E+11	1.746E+11	1.405E+11	7.914E+10	5.847E+10
	$d_{TOP\ OF\ STEEL}$ =	mm	1,121.5	1,188.3	1,407.0	1,410.5	1,389.7	1,371.5	1,240.5	1,212.7	1,240.5	1,371.5	1,389.7	1,410.5	1,407.0	1,188.3	1,121.5
	$d_{BOT\ OF\ STEEL}$ =	mm	1,418.5	1,381.7	1,218.0	1,244.5	1,260.3	1,198.5	1,314.5	1,347.3	1,314.5	1,198.5	1,260.3	1,244.5	1,218.0	1,381.7	1,418.5
	$S_{TOP\ OF\ STEEL}$ =	mm^3	5.214E+07	6.660E+07	9.985E+07	1.238E+08	1.231E+08	7.972E+07	5.880E+07	6.263E+07	5.880E+07	7.972E+07	1.231E+08	1.238E+08	9.985E+07	6.660E+07	5.214E+07
	$S_{BOT\ OF\ STEEL}$ =	mm^3	4.122E+07	5.728E+07	1.153E+08	1.403E+08	1.357E+08	9.123E+07	5.550E+07	5.638E+07	5.550E+07	9.123E+07	1.357E+08	1.403E+08	1.153E+08	5.728E+07	4.122E+07

4. Section: Steel Section + Bottom Slab/n + Top Slab/n & Top Slab Longitudinal Reinforcement - Loading: LL+IM																		
Total Section	A =	mm^2	142,388	154,638	227,244	247,875	245,569	209,125	151,102	153,102	151,102	209,125	245,569	247,875	227,244	154,638	142,388
	d_s =	mm	848.8	767.2	278.8	257.6	272.4	322.4	755.9	762.7	755.9	322.4	272.4	257.6	278.8	767.2	848.8
	I_{NA} =	mm^4	1.186E+11	1.501E+11	3.299E+11	3.667E+11	3.608E+11	2.954E+11	1.493E+11	1.498E+11	1.493E+11	2.954E+11	3.608E+11	3.667E+11	3.299E+11	1.501E+11	1.186E+11
Possitive Flexure: Steel Girder + Top Slab/n	A =	mm^2	142,388	154,638	179,102	199,566	197,316	161,316	151,102	153,102	151,102	161,316	197,316	199,566	179,102	154,638	142,388
	d_s =	mm	848.8	767.2	665.9	601.0	623.0	762.0	755.9	762.7	755.9	762.0	623.0	601.0	665.9	767.2	848.8
	I_{NA} =	mm^4	1.186E+11	1.501E+11	2.031E+11	2.458E+11	2.373E+11	1.589E+11	1.493E+11	1.498E+11	1.493E+11	1.589E+11	2.373E+11	2.458E+11	2.031E+11	1.501E+11	1.186E+11
	$d_{TOP\ OF\ STEEL}$ =	mm	421.2	517.8	644.1	724.0	702.0	523.0	514.1	512.3	514.1	523.0	702.0	724.0	644.1	517.8	421.2
	$d_{BOT\ OF\ STEEL}$ =	mm	2,118.8	2,052.2	1,980.9	1,931.0	1,948.0	2,047.0	2,040.9	2,047.7	2,040.9	2,047.0	1,948.0	1,931.0	1,980.9	2,052.2	2,118.8
	$S_{TOP\ OF\ STEEL}$ =	mm^3	2.816E+08	2.899E+08	3.154E+08	3.395E+08	3.380E+08	3.038E+08	2.904E+08	2.925E+08	2.904E+08	3.038E+08	3.380E+08	3.395E+08	3.154E+08	2.899E+08	2.816E+08
	$S_{BOT\ OF\ STEEL}$ =	mm^3	5.598E+07	7.315E+07	1.026E+08	1.273E+08	1.218E+08	7.763E+07	7.316E+07	7.317E+07	7.316E+07	7.763E+07	1.218E+08	1.273E+08	1.026E+08	7.315E+07	5.598E+07
Negative Flexure: Steel Girder + Top Slab Rebar + Bottom Slab/n	A =	mm^2	65,671	77,921	149,870	169,844	167,538	131,094	73,728	75,728	73,728	131,094	167,538	169,844	149,870	77,921	65,671
	d_s =	mm	148.5	96.7	-324.9	-289.4	-275.2	-347.8	29.5	62.3	29.5	-347.8	-275.2	-289.4	-324.9	96.7	148.5
	I_{NA} =	mm^4	5.847E+10	7.914E+10	1.691E+11	2.049E+11	2.024E+11	1.373E+11	7.295E+10	7.596E+10	7.295E+10	1.373E+11	2.024E+11	2.049E+11	1.691E+11	7.914E+10	5.847E+10
	$d_{TOP\ OF\ STEEL}$ =	mm	1,121.5	1,188.3	1,634.9	1,614.4	1,600.2	1,632.8	1,240.5	1,212.7	1,240.5	1,632.8	1,600.2	1,614.4	1,634.9	1,188.3	1,121.5
	$d_{BOT\ OF\ STEEL}$ =	mm	1,418.5	1,381.7	990.1	1,040.6	1,049.8	937.2	1,314.5	1,347.3	1,314.5	937.2	1,049.8	1,040.6	990.1	1,381.7	1,418.5
	$S_{TOP\ OF\ STEEL}$ =	mm^3	5.214E+07	6.660E+07	1.035E+08	1.269E+08	1.265E+08	8.407E+07	5.880E+07	6.263E+07	5.880E+07	8.407E+07	1.265E+08	1.269E+08	1.035E+08	6.660E+07	5.214E+07
	$S_{BOT\ OF\ STEEL}$ =	mm^3	4.122E+07	5.728E+07	1.708E+08	1.969E+08	1.928E+08	1.465E+08	5.550E+07	5.638E+07	5.550E+07	1.465E+08	1.928E+08	1.969E+08	1.708E+08	5.728E+07	4.122E+07

STRENGTH LIMIT STATE

Positive Flexure (Neglect Top Slab Reinforcement)

Check for Compact Section

Depth From Top of Top Slab to PNA, D_p	mm	312.6	353.6	352.4	351.2	312.2	312.2	508.6	430.5	508.6	312.2	312.2	351.2	352.4	353.6	312.6
		NA within tf	NA within web	NA within web	NA within web	NA within tf	NA within tf	NA within web	NA within web	NA within web	NA within tf	NA within tf	NA within web	NA within web	NA within web	NA within tf
a) Check Ductility Requirement (Article 6.10.5.2.2b) Distance Specified in 6.10.5.2.2c, D'	mm	264.5	265.9	268.7	270.1	269.6	265.9	265.9	265.9	265.9	265.9	269.6	270.1	268.7	265.9	264.5
		D'<Dp<5D'	D'<Dp<5D'	D'<Dp<5D'	D'<Dp<5D'	D'<Dp<5D'	D'<Dp<5D'	D'<Dp<5D'	D'<Dp<5D'	D'<Dp<5D'	D'<Dp<5D'	D'<Dp<5D'	D'<Dp<5D'	D'<Dp<5D'	D'<Dp<5D'	D'<Dp<5D'
b) Check Web Slenderness (Article 6.10.5.2.2c) Depth of Web in Compression, D_{cp}		0.0	40.0	38.8	37.6	0.0	0.0	195.0	116.9	195.0	0.0	0.0	37.6	38.8	40.0	0.0
$2D_{cp}/t_w$		0.0	4.4	4.3	4.2	0.0	0.0	21.7	13.0	21.7	0.0	0.0	4.2	4.3	4.4	0.0
$3.76\sqrt{E/F_{yc}}$		76.4	76.4	76.4	76.4	76.4	76.4	76.4	76.4	76.4	76.4	76.4	76.4	76.4	76.4	76.4
limit ratio		0.00	0.06	0.06	0.05	0.00	0.00	0.28	0.17	0.28	0.00	0.00	0.05	0.06	0.06	0.00
		compact	compact	compact	compact	compact	compact	compact	compact	compact	compact	compact	compact	compact	compact	compact
c) Check Member Proportions (Article 6.10.1.1) Iyc		7.146E+07	1.251E+08	3.200E+08	5.695E+08	5.695E+08	2.658E+08	1.067E+08	1.333E+08	1.067E+08	2.658E+08	5.695E+08	5.695E+08	3.200E+08	1.251E+08	7.146E+07
Iy		1.441E+08	3.129E+08	6.679E+08	1.178E+09	1.140E+09	5.328E+08	2.945E+08	3.212E+08	2.945E+08	5.328E+08	1.140E+09	1.178E+09	6.679E+08	3.129E+08	1.441E+08
		O.K.	O.K.	O.K.	O.K.	O.K.	O.K.	O.K.	O.K.	O.K.	O.K.	O.K.	O.K.	O.K.	O.K.	O.K.
Positive Plastic Moment Capacity, M_p	N-m	3.113E+07	3.976E+07	5.487E+07	6.758E+07	6.477E+07	4.199E+07	3.949E+07	3.967E+07	3.949E+07	4.199E+07	6.477E+07	6.758E+07	5.487E+07	3.976E+07	3.113E+07
Yield Moment Positive Composite/n, M_y	N-m	1.931E+07	2.524E+07	3.538E+07	4.391E+07	4.203E+07	2.678E+07	2.524E+07	2.524E+07	2.524E+07	2.678E+07	4.203E+07	4.391E+07	3.538E+07	2.524E+07	1.931E+07
Yield Moment per 6.10.5.1.2, M_y	N-m	2.378E+07	3.303E+07	4.974E+07	6.153E+07	5.861E+07	3.732E+07	2.986E+07	2.832E+07	2.986E+07	3.732E+07	5.861E+07	6.153E+07	4.974E+07	3.303E+07	2.378E+07
Nominal Flexural Resistance, M_n	N-m	2.874E+07	3.825E+07	5.294E+07	6.531E+07	6.363E+07	4.115E+07	3.538E+07	3.494E+07	3.538E+07	4.115E+07	6.363E+07	6.531E+07	5.294E+07	3.825E+07	2.874E+07
Find Hybrid Factor																
ρ		0.711	0.711	0.711	0.711	0.711	0.711	0.711	0.711	0.711	0.711	0.711	0.711	0.711	0.711	0.711
ψ		0.834	0.799	0.755	0.727	0.735	0.797	0.799	0.800	0.799	0.797	0.735	0.727	0.755	0.799	0.834
β		6.429	3.214	1.731	1.250	1.333	2.857	3.214	3.214	3.214	2.857	1.333	1.250	1.731	3.214	6.429
Positive Flexure Hybrid Factor, R_h		0.930	0.949	0.966	0.974	0.972	0.952	0.949	0.949	0.949	0.952	0.972	0.974	0.966	0.949	0.930

Negative Flexure (Include Top Slab Reinforcement)

Check for Compact Section

Depth From Top of Bottom Slab to PNA, D_p	mm	1495.6	1442.3	726.4	731.0	814.7	781.5	1278.2	1356.3	1278.2	781.5	814.7	731.0	726.4	1442.3	1495.6
		NA within web	NA within web	NA within web	NA within web	NA within web	NA within web	NA within web	NA within web	NA within web	NA within web	NA within web	NA within web	NA within web	NA within web	NA within web
a) Check Web Slenderness (Article 6.10.5.2.2c) Depth of Web in Compression, D_{cp}		1475.6	1407.3	661.4	651.0	739.7	746.5	1243.2	1321.3	1243.2	746.5	739.7	651.0	661.4	1407.3	1475.6
$2D_{cp}/t_w$		164.0	156.4	73.5	72.3	82.2	82.9	138.1	146.8	138.1	82.9	82.2	72.3	73.5	156.4	164.0
$3.76\sqrt{E/F_{yc}}$		76.4	76.4	76.4	76.4	76.4	76.4	76.4	76.4	76.4	76.4	76.4	76.4	76.4	76.4	76.4
limit ratio		2.15	2.05	0.96	0.95	1.08	1.09	1.81	1.92	1.81	1.09	1.08	0.95	0.96	2.05	2.15
b) Check Compression Flange Slenderness $b_f/2_{tf}$		8.8	5.7	3.1	2.8	3.0	6.4	5.7	5.7	5.7	6.4	3.0	2.8	3.1	5.7	8.8
$0.382\sqrt{E/F_{yc}}$		7.8	7.8	7.8	7.8	7.8	7.8	7.8	7.8	7.8	7.8	7.8	7.8	7.8	7.8	7.8
limit ratio		1.13	0.74	0.40	0.36	0.39	0.83	0.74	0.74	0.74	0.83	0.39	0.36	0.40	0.74	1.13
c) Check Slenderness Interaction $2D_{cp}/t_w+9.35b_f/2_{tf}$		245.8	209.8	102.3	98.6	110.2	143.1	191.6	200.2	191.6	143.1	110.2	98.6	102.3	209.8	245.8
$6.25\sqrt{E/F_{yc}}$		126.9	126.9	126.9	126.9	126.9	126.9	126.9	126.9	126.9	126.9	126.9	126.9	126.9	126.9	126.9
limit ratio		1.94	1.65	0.81	0.78	0.87	1.13	1.51	1.58	1.51	1.13	0.87	0.78	0.81	1.65	1.94
		non-compact	non-compact	compact	compact	non-compact	non-compact	non-compact	non-compact	non-compact	non-compact	non-compact	compact	compact	non-compact	non-compact
Negative Plastic Moment Capacity	N-m	2.204E+07	2.978E+07	5.340E+07	6.592E+07	6.507E+07	4.223E+07	2.733E+07	2.853E+07	2.733E+07	4.223E+07	6.507E+07	6.592E+07	5.340E+07	2.978E+07	2.204E+07
Nominal Flexural Resistance, Mn	N-m	0.000E+00	0.000E+00	5.340E+07	6.592E+07	0.000E+00	0.000E+00	0.000E+00	0.000E+00	0.000E+00	0.000E+00	0.000E+00	6.592E+07	5.340E+07	0.000E+00	0.000E+00
Find Hybrid Factor																
ρ		0.711	0.711	0.711	0.711	0.711	0.711	0.711	0.711	0.711	0.711	0.711	0.711	0.711	0.711	0.711
β		12.857	7.347	3.750	2.667	2.667	5.714	11.250	9.000	11.250	5.714	2.667	2.667	3.750	7.347	12.857
Negative Flexure Hybrid Factor, R_h		0.923	0.938	0.957	0.965	0.965	0.945	0.926	0.932	0.926	0.945	0.965	0.965	0.957	0.938	0.923

LIVE-LOAD LATERAL BENDING MOMENT DISTRIBUTION FACTORS

Interior Girder		SPAN 1				SPAN 2							SPAN 3			
a_g =	mm	1,449.3	1,480.4	1,478.9	1,475.3	1,449.3	1,449.3	1,563.7	1,523.5	1,563.7	1,449.3	1,449.3	1,475.3	1,478.9	1,480.4	1,449.3
K_g =	mm^4	1.357E+12	1.774E+12	2.502E+12	3.112E+12	2.973E+12	1.878E+12	1.773E+12	1.773E+12	1.773E+12	1.878E+12	2.973E+12	3.112E+12	2.502E+12	1.774E+12	1.357E+12
Positive Moment Distribution Factor																
Average Span Length	mm	65,000	65,000	65,000	65,000	100,000	100,000	100,000	100,000	100,000	100,000	100,000	65,000	65,000	65,000	65,000
Maximum of One, and two or more lanes loaded		0.759	0.777	0.802	0.816	0.725	0.686	0.682	0.682	0.682	0.686	0.725	0.816	0.802	0.777	0.759
Negative Moment Distribution Factor																
Average Span Length	mm	82,500	82,500	82,500	82,500	82,500	82,500	82,500	82,500	82,500	82,500	82,500	82,500	82,500	82,500	82,500
Maximum of One, and two or more lanes loaded		0.711	0.729	0.752	0.766	0.783	0.732	0.729	0.729	0.729	0.732	0.783	0.766	0.752	0.729	0.711

LOAD COMBINATIONS

Fy =		485.00	DC_D DL	DC_1 DL	DC_2 DL	DW DL	LL Envelope (Lane Load)		LL Envelope (Girder Load)		Strength I Moment (M_{u1})		Strength IV Moment (M_{u4})		Yield Mom	M_u/M_y		Service II Stresses (MPa)		Service II Stresses (MPa)		I/0.95xR$_h$xF$_{yf}$	I/0.95xR$_h$xF$_{yb}$
			Moment	Moment	Moment	Moment	Min Moment	Max Moment	Min Moment	Max Moment	Min Moment	Max Moment	Min Moment	Max Moment	M_y	Max Moment	Min Moment	Min Moment		Max Moment		top flange	bot flange
	X1	X2	(N-m)	(N-m)	(N-m)	(N-m)	(N-m)	(N-m)	(N)	(N-m)	(N-m)	(N-m)	(N-m)	(N-m)	(N-m)			$R_{h\,deck\,top}$	$R_{h\,deck\,bottom}$	$R_{h\,deck\,top}$	$R_{h\,deck\,bottom}$	ratio	ratio
0.00	0.0	2.2	0.00E+00	0.00E+00	0.00E+00	0.00E+00	0.00E+00	0.00E+00	0.00E+00	0.00E+00	0.000E+00	0.000E+00	0.000E+00	0.000E+00	2.715E+07	0.00	0.00	0.00	0.00	0.00	0.00	0.00	0.00
13.50	13.0	15.2	7.74E+05	4.05E+06	4.98E+05	5.39E+05	-2.29E+06	6.84E+06	-1.63E+06	5.19E+06	4.384E+06	1.571E+07	8.351E+06	8.351E+06	2.378E+07	0.55	0.15	103.38	103.91	187.88	275.70	0.38	0.60
13.50	13.0	15.2	7.74E+05	4.05E+06	4.98E+05	5.39E+05	-2.29E+06	6.84E+06	-1.67E+06	5.32E+06	4.318E+06	1.583E+07	8.351E+06	8.351E+06	3.303E+07	0.42	0.11	72.88	70.29	129.23	202.57	0.28	0.44
28.17	28.2	30.3	4.78E+05	3.64E+06	4.53E+05	4.80E+05	-4.77E+06	9.28E+06	-3.48E+06	7.21E+06	3.477E+05	1.812E+07	7.211E+06	7.211E+06	3.338E+07	0.47	0.01	22.6	14.3	122.8	221.3	0.27	0.48
51.30	49.8	52.0	-2.74E+06	-7.26E+06	-8.67E+05	-8.38E+05	-1.07E+07	4.49E+06	-7.79E+06	3.49E+06	-2.720E+07	-8.451E+06	-1.663E+07	-1.663E+07	4.068E+07	non-compact	non-compact	-380.10	-380.77	-212.34	-180.94	0.86	0.63
51.30	49.8	52.0	-2.74E+06	-7.26E+06	-8.67E+05	-8.38E+05	-1.07E+07	4.49E+06	-8.04E+06	3.80E+06	-2.761E+07	-8.268E+06	-1.663E+07	-1.663E+07	4.974E+07	0.15	0.52	-242.39	-178.54	-126.58	-89.78	0.53	0.38
58.80	56.5	60.7	-5.10E+06	-1.35E+07	-1.62E+06	-1.75E+06	-1.31E+07	2.17E+06	-9.85E+06	1.74E+06	-4.265E+07	-2.350E+07	-3.127E+07	-3.127E+07	4.974E+07	0.44	0.80	-386.45	-289.34	-255.55	-192.37	0.88	0.63
58.80	56.5	60.7	-5.10E+06	-1.35E+07	-1.62E+06	-1.75E+06	-1.31E+07	2.17E+06	-1.00E+07	1.77E+06	-4.317E+07	-2.353E+07	-3.127E+07	-3.127E+07	6.153E+07	0.36	0.65	-307.14	-237.71	-197.47	-153.29	0.67	0.52
85.00	82.8	85.0	-8.25E+06	-1.96E+07	-2.37E+06	-2.56E+06	-1.50E+07	2.07E+06	-1.22E+07	1.69E+06	-5.964E+07	-3.672E+07	-4.670E+07	-4.670E+07	6.184E+07	0.56	0.91	-430.54	-337.94	-298.88	-239.98	0.97	0.73
0.00	0.0	3.3	-8.25E+06	-1.96E+07	-2.37E+06	-2.56E+06	-1.50E+07	2.07E+06	-1.22E+07	1.50E+06	-5.976E+07	-3.704E+07	-4.670E+07	-4.670E+07	5.870E+07	non-compact	non-compact	-432.53	-348.69	-301.67	-250.63	0.97	0.78
9.00	8.7	10.0	-3.00E+06	-1.01E+07	-1.20E+06	-1.30E+06	-8.79E+06	2.18E+06	-8.71E+06	1.58E+06	-2.992E+07	-1.615E+07	-2.218E+07	-2.218E+07	5.861E+07	non-compact	non-compact	-214.33	-189.81	-139.32	-107.74	0.47	0.37
9.00	8.7	10.0	-3.00E+06	-1.01E+07	-1.20E+06	-1.30E+06	-8.79E+06	2.18E+06	-8.43E+06	1.51E+06	-2.947E+07	-1.626E+07	-2.218E+07	-2.218E+07	3.740E+07	non-compact	non-compact	-345.37	-255.22	-239.39	-172.75	0.79	0.55
19.50	18.7	20.0	3.59E+05	-1.26E+06	-1.31E+05	-1.42E+05	-5.48E+06	4.74E+06	-4.01E+06	3.30E+06	-8.066E+06	4.055E+06	-1.674E+06	-1.674E+06	3.732E+07	0.10	non-compact	-78.58	-47.25	-3.46	43.58	0.17	0.10
19.50	18.7	20.0	3.59E+05	-1.26E+06	-1.31E+05	-1.42E+05	-5.48E+06	4.74E+06	-3.99E+06	3.29E+06	-8.062E+06	4.027E+06	-1.674E+06	-1.674E+06	3.611E+07	0.11	non-compact	-114.46	-116.85	-11.57	35.12	0.25	0.25
34.50	33.3	36.7	2.51E+06	6.80E+06	8.50E+05	9.20E+05	-3.28E+06	9.36E+06	-2.30E+06	6.48E+06	9.402E+06	2.414E+07	1.579E+07	1.579E+07	2.866E+07	0.09	0.27	189.57	155.28	267.96	330.95	0.58	0.72
34.50	33.3	36.7	2.51E+06	6.80E+06	8.50E+05	9.20E+05	-3.28E+06	9.36E+06	-2.30E+06	6.48E+06	9.402E+06	2.414E+07	1.579E+07	1.579E+07	3.034E+07	0.09	0.27	189.57	155.28	247.96	325.44	0.54	0.71
50.00	50.0	53.3	3.31E+06	9.84E+06	1.20E+06	1.29E+06	-2.65E+06	1.13E+07	-1.83E+06	7.84E+06	1.543E+07	3.188E+07	2.200E+07	2.200E+07	2.832E+07	0.91	0.44	264.95	248.49	339.92	432.38	0.74	0.99
85.50	83.3	86.7	2.51E+06	6.80E+06	8.50E+05	9.20E+05	-3.28E+06	9.36E+06	-2.30E+06	6.48E+06	9.402E+06	2.414E+07	1.579E+07	1.579E+07	3.034E+07	0.09	0.27	189.57	155.28	247.96	325.44	0.54	0.71
85.50	83.3	86.7	2.51E+06	6.80E+06	8.50E+05	9.20E+05	-3.28E+06	9.36E+06	-2.30E+06	6.48E+06	9.402E+06	2.414E+07	1.579E+07	1.579E+07	2.866E+07	0.09	0.27	185.69	150.89	267.52	330.95	0.58	0.72
80.50	80.0	83.3	3.59E+05	-1.26E+06	-1.31E+05	-1.42E+05	-5.48E+06	4.74E+06	-3.99E+06	3.29E+06	-8.062E+06	4.027E+06	-1.674E+06	-1.674E+06	3.611E+07	0.11	non-compact	-114.46	-116.85	-11.57	35.12	0.25	0.25
80.50	80.0	83.3	3.59E+05	-1.26E+06	-1.31E+05	-1.42E+05	-5.48E+06	4.74E+06	-4.01E+06	3.30E+06	-8.066E+06	4.055E+06	-1.674E+06	-1.674E+06	3.732E+07	0.10	non-compact	-78.58	-47.25	-3.46	43.58	0.17	0.10
91.00	90.0	93.3	-3.00E+06	-1.01E+07	-1.20E+06	-1.30E+06	-8.79E+06	2.18E+06	-8.43E+06	1.51E+06	-2.947E+07	-1.626E+07	-2.218E+07	-2.218E+07	3.740E+07	non-compact	non-compact	-345.37	-255.22	-239.39	-172.75	0.79	0.55
91.00	90.0	93.3	-3.00E+06	-1.01E+07	-1.20E+06	-1.30E+06	-8.79E+06	2.18E+06	-8.71E+06	1.58E+06	-2.992E+07	-1.615E+07	-2.218E+07	-2.218E+07	5.861E+07	non-compact	non-compact	-214.33	-189.81	-139.32	-107.74	0.47	0.37
100.00	98.7	100.0	-8.25E+06	-1.96E+07	-2.37E+06	-2.56E+06	-1.50E+07	2.07E+06	-1.22E+07	1.50E+06	-5.976E+07	-3.704E+07	-4.670E+07	-4.670E+07	5.870E+07	non-compact	non-compact	-432.53	-348.69	-301.67	-250.63	0.97	0.78
0.00	0.0	2.2	-8.25E+06	-1.96E+07	-2.37E+06	-2.56E+06	-1.50E+07	2.07E+06	-1.22E+07	1.69E+06	-5.964E+07	-3.672E+07	-4.670E+07	-4.670E+07	6.184E+07	0.56	0.91	-430.54	-337.94	-298.88	-239.98	0.97	0.73
6.20	4.3	6.5	-5.10E+06	-1.35E+07	-1.62E+06	-1.75E+06	-1.31E+07	2.17E+06	-1.00E+07	1.77E+06	-4.317E+07	-2.353E+07	-3.127E+07	-3.127E+07	6.153E+07	0.36	0.65	-307.14	-237.71	-197.47	-153.29	0.67	0.52
6.20	4.3	6.5	-5.10E+06	-1.35E+07	-1.62E+06	-1.75E+06	-1.31E+07	2.17E+06	-9.85E+06	1.74E+06	-4.265E+07	-2.350E+07	-3.127E+07	-3.127E+07	4.974E+07	0.44	0.80	-386.45	-289.34	-255.55	-192.37	0.88	0.63
13.70	13.0	15.2	-2.74E+06	-7.26E+06	-8.67E+05	-8.38E+05	-1.07E+07	4.49E+06	-8.04E+06	3.80E+06	-2.761E+07	-8.268E+06	-1.663E+07	-1.663E+07	4.974E+07	0.15	0.52	-242.39	-178.54	-126.58	-89.78	0.53	0.38
13.70	13.0	15.2	-2.74E+06	-7.26E+06	-8.67E+05	-8.38E+05	-1.07E+07	4.49E+06	-7.79E+06	3.49E+06	-2.720E+07	-8.451E+06	-1.663E+07	-1.663E+07	4.068E+07	non-compact	non-compact	-380.10	-380.77	-212.34	-180.94	0.86	0.63
36.83	36.8	39.0	4.78E+05	3.64E+06	4.53E+05	4.80E+05	-4.77E+06	9.28E+06	-3.48E+06	7.21E+06	3.477E+05	1.812E+07	7.211E+06	7.211E+06	3.338E+07	0.47	0.01	22.60	14.27	122.78	221.32	0.27	0.48
51.50	49.8	52.0	7.74E+05	4.05E+06	4.98E+05	5.39E+05	-2.29E+06	6.84E+06	-1.67E+06	5.32E+06	4.318E+06	1.583E+07	8.351E+06	8.351E+06	3.303E+07	0.42	0.11	72.88	70.29	129.23	202.57	0.28	0.44
51.50	49.8	52.0	7.74E+05	4.05E+06	4.98E+05	5.39E+05	-2.29E+06	6.84E+06	-1.63E+06	5.19E+06	4.384E+06	1.571E+07	8.351E+06	8.351E+06	2.378E+07	0.55	0.15	103.38	103.91	187.88	275.70	0.38	0.60
85.00	82.8	85.0	8.42E-04	4.33E-03	5.31E-04	5.75E-04	-1.69E-03	6.55E-03	-1.20E-03	4.87E-03	5.592E-03	1.585E-02	9.951E-03	9.951E-03	2.715E+07	0.00	0.00	0.00	0.00	0.00	0.00	0.00	0.00