TECHNICAL ASSISTANCE
REPORT

PB99-152977

ESTIMATING INTERSECTION TURNING MOVEMENTS

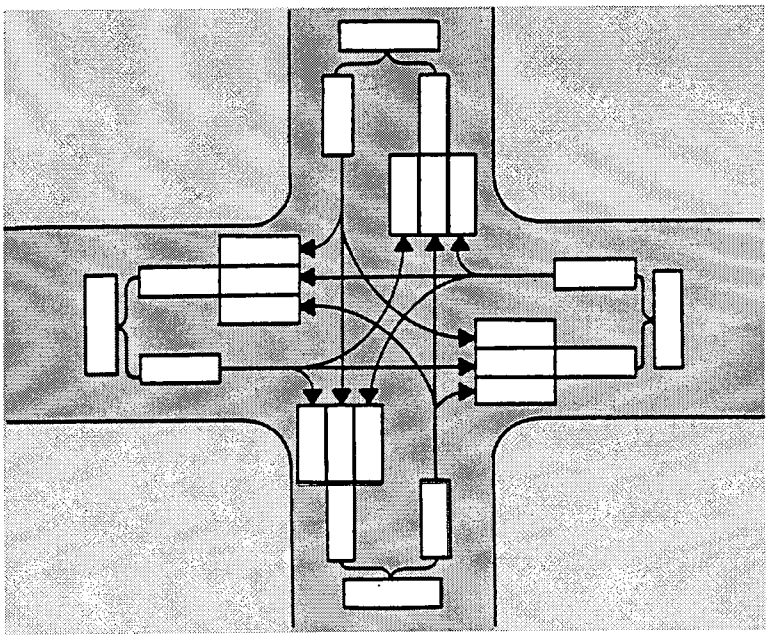

STEVEN L. JONES, JR.
Research Scientist

EUGENE D. ARNOLD, JR.
Senior Research Scientist

V · I · R · G · I · N · I · A
VTRC
TRANSPORTATION RESEARCH COUNCIL

REPRODUCED BY
U.S. DEPARTMENT OF COMMERCE
NATIONAL TECHNICAL
INFORMATION SERVICE
SPRINGFIELD, VA 22161

VIRGINIA TRANSPORTATION RESEARCH COUNCIL

PB99-152977

Standard Title Page - Report on State Project

Report No.	Report Date	No. Pages	Type Report: Technical Assistance	Project No.: 00021532-6940
VTRC 99-TAR8	May 1999	25	Period Covered: Aug. 1998 – May 1999	Contract No.

Title and Subtitle:
ESTIMATING INTERSECTION TURNING MOVEMENTS

Key Words:
Turning movements
Estimating turning movements
Forecasting turning movements

Authors:
Steven L. Jones, Jr., and Eugene D. Arnold, Jr.

Performing Organization Name and Address:

Virginia Transportation Research Council
530 Edgemont Road
Charlottesville, VA 22903

Sponsoring Agencies' Name and Address

Virginia Department of Transportation
1401 E. Broad Street
Richmond, VA 23219

Supplementary Notes

Abstract

Turning movement (TM) counts are used for a variety of intersection analyses, including traffic operations analyses, intersection design, and transportation planning applications. For many planning and design applications, especially in the case of proposed future improvements to an intersection or even proposed new intersections, future year TM counts are needed for the analysis. Accordingly, there is a need to forecast turning movements at the intersection.

The purpose of the research was to inventory and review the methods used to forecast intersection turning movements. The effort was limited to a literature review and a limited survey of practitioners to determine methods currently being used to make such forecasts.

Based on this limited review, it was found that the state-of-the-practice for estimating turning movements is based on using growth factors to project link volumes and TM counts. In many cases, engineering judgement is used to account for special conditions or to accommodate known or anticipated land use changes that may significantly impact turning movements. The implication, therefore, is that although there are similarities among methods used by a variety of organizations for a variety of purposes, there is no identifiable preferred means of estimating turning movements. The most definitive technique found is the procedures described in the National Cooperative Highway Research Project (NCHRP) Report 255.

PROTECTED UNDER INTERNATIONAL COPYRIGHT
ALL RIGHTS RESERVED.
NATIONAL TECHNICAL INFORMATION SERVICE
U.S. DEPARTMENT OF COMMERCE

TECHNICAL ASSISTANCE REPORT

ESTIMATING INTERSECTION TURNING MOVEMENTS

Steven L. Jones, Jr.
Research Scientist

Eugene D. Arnold, Jr.
Senior Research Scientist

(The opinions, findings, and conclusions expressed in this report are those of the authors and not necessarily those of the sponsoring agency.)

Virginia Transportation Research Council
(A Cooperative Organization Sponsored Jointly by the Virginia Department of Transportation and the University of Virginia)

Charlottesville, Virginia

May 1999
VTRC 99-TAR8

Copyright 1999 by the Virginia Department of Transportation.

NTIS is authorized to reproduce and sell this report. Permission for further reproduction must be obtained from the copyright owner.

ABSTRACT

Turning movement (TM) counts are used for a variety of intersection analyses, including traffic operations analyses, intersection design, and transportation planning applications. For many planning and design applications, especially in the case of proposed future improvements to an intersection or even proposed new intersections, future year TM counts are needed for the analysis. Accordingly, there is a need to forecast turning movements at the intersection.

The purpose of the research was to inventory and review the methods used to forecast intersection turning movements. The effort was limited to a literature review and a limited survey of practitioners to determine methods currently being used to make such forecasts.

Based on this limited review, it was found that the state-of-the-practice for estimating turning movements is based on using growth factors to project link volumes and TM counts. In many cases, engineering judgement is used to account for special conditions or to accommodate known or anticipated land use changes that may significantly impact turning movements. The implication, therefore, is that although there are similarities among methods used by a variety of organizations for a variety of purposes, there is no identifiable preferred means of estimating turning movements. The most definitive technique found is the procedures described in the National Cooperative Highway Research Project (NCHRP) Report 255.

ESTIMATING INTERSECTION TURNING MOVEMENTS

Steven L. Jones, Jr.
Research Scientist

Eugene D. Arnold, Jr.
Senior Research Scientist

INTRODUCTION

Although the movements at a specific intersection are dependent upon its configuration, vehicles arriving at an intersection can typically proceed straight through it or turn left or right. The number of vehicles making each movement is referred to as an intersection turning movement (TM) count.

TM counts are used for a variety of intersection analyses, including traffic operations analyses, intersection design, and transportation planning applications. When operational analyses are undertaken at existing intersections, e.g., for capacity analysis or to evaluate/change signal timings, TM counts can be manually collected. However, for many planning and design applications, especially in the case of proposed future improvements to an intersection or even proposed new intersections, future year TMs are needed for the analysis. That is, there is a need to forecast TMs at the intersection. Often, forecast link volumes (approach volumes on the legs of the intersection) are available from transportation planning models or other forecasting procedures. However, methods used to forecast the TMs, either by distributing the link volumes within the intersection or by other means, are not as well defined or straightforward.

PURPOSE AND SCOPE

The purpose of the research was to inventory and review the methods used to forecast intersection TMs and address concerns regarding their accuracy and cost. The effort was limited to a literature review and a limited survey of practitioners to determine methods currently being used to make such forecasts.

METHODOLOGY

Literature Review

A literature review was conducted primarily through the use of the Silver Platter CD-ROM database and search software. Several journal articles and technical reports relevant to the present effort were identified and reviewed.

Internal Survey

The primary focus of this effort was to provide VDOT personnel information regarding the estimation of intersection TMs for forecasting and planning purposes. The initial effort, therefore, was to determine the current state of the practice within VDOT. An e-mail survey was distributed to the six heads of the planning sections in VDOT's Transportation Planning Division (TPD) in its central office in Richmond and to four district planners in field offices having planning personnel. The survey was intended to allow various VDOT personnel to describe the methodology they use to estimate or forecast TMs as well as identify the traffic engineering and transportation applications for which they utilize estimated TMs. It also allowed VDOT personnel the opportunity to comment on their perceptions of the accuracy and costs associated with the methodology they used. A copy of the VDOT internal survey is provided in Appendix A. A follow-up e-mail requesting example calculations was then sent to six VDOT respondents. Replies were received from two respondents.

External Survey

An additional e-mail survey was sent to a more general sample of transportation professionals. An on-line discussion group, the ITE Traffic Engineering list server sponsored by the Institute of Traffic Engineers (ITE), was used to distribute the survey. The list server reaches transportation professionals from around the world that have voluntarily subscribed to the list. A total of 32 responses to the external survey were received. The external survey maintained the same objectives as the internal survey to allow comparisons among all respondents. A copy of the external survey is provided in Appendix B.

Final Report

The results of the literature review and surveys were then compiled and synthesized into a technical assistance document.

RESULTS

Literature Review

The majority of the literature identified on forecasting TMs provided more detail than was necessary for the present effort. These reports and articles typically described the mathematical theory of various estimation techniques. A bibliography of some of the more germane literature is provided in Appendix C.

A 1993 study conducted at the Texas Transportation Institute (TTI) entitled *The State-of-the-Practice in Forecasting Turning Flows* was very similar in its approach to

the present effort. Several methods were identified and discussed in the literature review section of the study. The TTI study also presented the results of a telephone survey of forecasting practices from 10 state DOTs. The survey results indicated wide variability in the methods used to develop TM estimates (Piper, J. L. et al., 1993).

Internal survey

All of the respondents from within VDOT reported that they used TM forecasts for individual intersection analyses, corridor analyses, and traffic impact analyses. Five of the six stated that forecasted TMs were used in their intersection design/improvement and long-range planning efforts. Four of the six indicated that forecasted TMs were used in pedestrian-related studies as well as in signal-timing plan development.

With regard to the specific methodology used, five of the six respondents indicated that they used conventional growth factor based techniques to forecast TMs. Four of the respondents explicitly indicated that land use was considered in the process. One VDOT representative noted the use of the procedures contained in the National Cooperative Highway Research Project (NCHRP) Report 255.

Half of the respondents considered their methods to be moderately accurate. None of the respondents indicated highly accurate results and two expressed uncertainties about the accuracy of the forecasts. Half of the respondents also indicated that costs associated with performing forecasts were moderate. None of the respondents reported high costs, and four indicated low costs.

After the initial survey, a follow-up request asking for more detailed information was sent to the respondents. Two of the original respondents transmitted examples of TM forecasting studies. The examples were very helpful and indicated the similarity of the methodologies used within VDOT. A copy of one study is provided in Appendix D for informational purposes only.

External Survey

An e-mail survey very similar to the one distributed to VDOT representatives was administered over the ITE's e-mail list server. The distribution of responses among various types of organizations is shown in Figure 1.

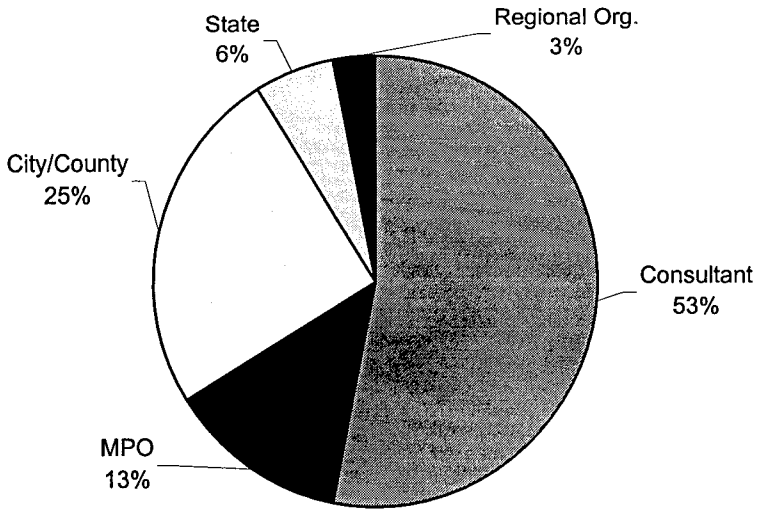

Figure 1. Distribution of Respondent Organizational Types.

The majority of respondents to the external survey indicated that they forecasted TMs for the purposes of individual intersection analyses, corridor analyses, traffic impact analyses, and intersection design/improvement efforts. Roughly half of the respondents indicated that they used TM forecasts for the development of long-range plans and signal timing plans. Less than 20 percent reported using forecasted TMs for pedestrian-related studies.

In contrast to the internal survey, responses to the external survey indicated a wide range of techniques for forecasting TMs. The most common response concurred with the results of the internal VDOT survey; i.e., existing counts and growth factors are used to produce forecasts. Three transportation planning software packages were also identified. Other respondents indicated some lesser known computer applications (e.g., TRAFFIX and FRATURN) or some combination of methods. The different methodologies are listed in Table 1.

Table 1. Forecasting Methods Identified in External Survey.

Number or Respondents	Method
8	counts & growth factors
3	NCHRP 255
3	MINUTP
3	EMME2
1	TRANPLAN
1	TMOVES
11	Other

Over half of the respondents to the external survey indicated that they consider the method they use to be fairly accurate. Half also responded that they associated low costs with their methodology. The majority of respondents citing methods similar to those used within VDOT indicated fair accuracy and low-to-moderate costs.

Discussion

There are numerous techniques and even computerized methods available to generate TM estimates. The most common technique used is the application of growth factors to existing link volumes and TM data. It was noted that in many cases this information must be "adjusted" due to land use considerations or other reasons that may cause a straight growth factor to be insufficient. No definitive or analytically based methods for performing these adjustments were identified by respondents, who apparently relied solely on knowledge of the project or local conditions and also primarily on their engineering judgement. Most respondents associated moderate accuracy and low-to-moderate costs with the technique used.

A few respondents to the external survey, as well as one VDOT respondent, indicated the use of the methodology described in the NCHRP Report 255 entitled *Highway Traffic Data for Urbanized Area Project Planning and Design* (Pedersen, N.J. & Samdahl, D.R., 1982). For this reason, a brief discussion of these procedures is provided below. For additional detail, readers are referred to the original report.

NCHRP Report 255 identifies three methods for estimating TMs: the ratio method, the difference method, and the combined method. The use of these methods is dependent on the availability of various types of data. Each method is an iterative procedure and, as a minimum, requires base year turning counts (although the ratio method may be used when only link volumes are available).

CONCLUSIONS

The state-of-the-practice for estimating TMs is based on using growth factors to project link volumes and TM counts. In many cases, engineering judgement is used to account for special conditions or to accommodate known or anticipated land use changes that may significantly impact TMs. *The implication, therefore, is that although there are similarities among methods used by a variety of organizations for a variety of purposes, there is no identifiable preferred means of estimating TMs.* The most definitive technique found is the procedures described in the NCHRP Report 255. VDOT professionals responsible for estimating TMs may find it beneficial to familiarize themselves with the concepts and procedures outlined in this report.

ACKNOWLEDGEMENTS

The researchers would like to thank all of the survey participants both internal to VDOT and those outside the organization. Special thanks are in order to Ben Mannell and Peggy Todd for providing detailed examples of the procedures they currently use.

REFERENCES

Pedersen, N.J., and Samdahl, D.R. 1982. *Highway Traffic Data for Urbanized Area Project Planning and Design*. NCHRP 255. Washington, D.C.: Transportation Research Board.

Piper, J. L., Pearson, D.F., and Dresser, G.B. 1993. *The State-of-the-Practice in Forecasting Turning Movements*. Research Report No. 1235-11. College Station, TX: Texas Transportation Institute.

APPENDIX A
Internal Survey

Fellow VDOT Professionals:

The Virginia Transportation Research Council is involved in an effort to ascertain the various methods available and currently in use to forecast turning movement volumes for project and planning applications. The purpose of the effort is to ultimately compile a list of potential procedures that VDOT personnel might follow as they review and conduct traffic studies requiring turning movement forecasts. The survey is very brief and can be submitted by using the "REPLY" function of your e-mail package. Thank you for your participation.

Turning Movement Forecasting Survey

Use the "REPLY" function of your e-mail package and place an X by the appropriate response(s) and provide short (if applicable) answers in blank provided.

1) Do you currently use forecasted turning movements for planning and analysis purposes? (check one)

- Yes
- No

2) For what purposes do you use forecasted turning movements? (check all that apply)

- Individual intersection analysis
- Corridor analysis
- Long-range planning
- Impact analysis of proposed development(s)
- Signal timing
- Intersection design/improvement
- Pedestrian-related studies
- Other (please describe below)

3) What methodology do you use to forecast turning movements? (please describe below)

4) Is the methodology you use generally conducted by hand or computer? (check one)

- Hand
- Computer

5) Who in your organization is responsible for applying the forecasting methodology? (check all that apply)

- Technician
- Junior Engineer (e.g., Engineer-In-Training)
- Senior Engineer (e.g., Professional Engineer)
- Planner
- Other (please describe below)

6) How do you rate the method you use with respect to its accuracy and costs? (check all that apply)

- Highly accurate
- Moderately accurate
- Fairly accurate
- Unknown accuracy
- High costs
- Moderate costs
- Low costs
- Unknown costs

7) Would you be interested in the results of our study? (check one)

- Yes
- No

APPENDIX B
External Survey

Fellow Transportation Professionals:

The Virginia Transportation Research Council is involved in an effort to ascertain the various methods available and currently in use to forecast turning movement volumes for project and planning applications. The purpose of the effort is to ultimately compile a list of procedural recommendations for Virginia Department of Transportation personnel to follow as they review and conduct traffic studies requiring turning movement forecasts. The survey is very brief and can be submitted by using the "REPLY" function of your e-mail package. Thank you for your participation.

Turning Movement Forecasting Survey

Use the "REPLY" function of your e-mail package and place an X by the appropriate response(s) and provide short (if applicable) answers in blank provided.

1) Which best describes your organization? (check one)

- Consulting Firm
- Metropolitan Planning Organization (MPO)
- City/ County Government
- State Government
- Other Regional Organization
- Other (please describe below)

2) Do you currently use forecasted turning movements for planning and analysis purposes? (check one)

- Yes
- No

If you answered yes to Question #2, please proceed to Question # 3. If you answer was no, please skip to question #8.

---

3) For what purposes do you use forecasted turning movements? (check all that apply)

- Individual intersection analysis
- Corridor analysis
- Long-range planning
- Impact analysis of proposed development(s)
- Signal timing
- Intersection design/improvement
- Pedestrian-related studies
- Other (please describe below)

4) What methodology do you use to forecast turning movements? (please describe below)

5) Is the methodology you use generally conducted by hand or computer? (check one)

- Hand
- Computer

6) Who in your organization is responsible for applying the forecasting methodology? (check all that apply)

- Technician
- Junior Engineer (e.g., Engineer-In-Training)
- Planner
- Senior Engineer (e.g., Professional Engineer)
- Other (please describe below)

7) How do you rate the method you use with respect to its accuracy and costs? (check all that apply)

- Highly accurate
- Moderately accurate
- Fairly accurate
- Unknown accuracy
- High costs
- Moderate costs
- Low costs
- Unknown costs

8) Would you be interested in the results of our study? (check one)

- Yes
- No

APPENDIX C
Annotated Bibliography

Davis, G.A., & Lan, C.J. 1996. Estimating Intersection Turning Movement Proportions from Less-Than-Complete Sets of Traffic Counts. *Transportation Research Record*, No. 1510: 51-59.

ABSTRACT: The feasibility of estimating turning movements proportions from less-than-complete sets of traffic counts is assessed and the statistical properties of less-than-complete count estimates are compared with estimates generated from complete counts. The results indicate that estimation can be done providing the initial count/detector configuration satisfies an identifiability condition. The identifiability condition is explained. A numerical test is presented to assess whether or not this condition is satisfied, along with some simple rules for designing count/detector configurations that are likely to satisfy this condition. A Monte Carlo experiment suggests that estimates from less-than-complete count are more variable than those generated from complete count sets.

Furth, P.G. 1990. Model of Turning Movement Propensity. *Transportation Research Record*, No. 1287: 195-204.

ABSTRACT: A model is described for determining the seed propensity matrix from which turning movement flows at an intersection can be estimated to match given inflow and outflow volumes, using the bi-proportional method when intersection-specific counts are unavailable. Normalizing counts to standard inflow and outflow totals is demonstrated to reveal striking similarity in underlying turning propensities for different intersections. Roadway functional class is shown to be a poor explanator of turning propensity. Rather, turning angle , competing short cuts, presence of dead-end approaches, and overall grid density are to better explain turning movement propensity.

Hauer, E., Pagitsas, E., and Shin, B.T. 1981. Estimation of Turning Flows from Automatic Counts. *Transportation Research Record*, No. 795: 147-154.

ABSTRACT: A method for estimating and developing turning movements is presented. The problem is solved by identifying the most likely traffic-flow matrix that agrees with given approach counts. It is based on a field study of 145 intersections. Characteristic right- and left-turn proportions are the given for five intersection types.

Martin, P.T., & Bell, M.C. 1992. Network Programming to Derive Turning Movements from Link Flows. *Transportation Research Record*, No. 1365: 147-154.

ABSTRACT: A novel approach that uses linear programming techniques to estimating turning movements from link flows is presented. The principles of the approach are explained and an example application, calibration, and validation are presented. The results indicate that the approach predicts turning movements from link flows with sufficient accuracy.

Mekky, A. 1996. Forecasting Balanced Highway Volumes Using Modeling Packages and Spreadsheets. *Transportation Research Record*, No. 1556: 47-57.

ABSTRACT: The question of producing forecasts that are consistent among themselves and compatible with the base year counts using modeling packages and spreadsheet techniques is addressed. Simple techniques using a spreadsheet with or without transportation modeling software are described and applied to an example case study. The results are compared with more sophisticated techniques. The results indicate that the simple techniques are good approximations to the more sophisticated ones in certain applications.

Schaeffer, M.C. 1988. Estimation of Intersection Turning Movement from Approach Counts. *ITE Journal*. Washington, D.C.: Institute of Transportation Engineers. October, 1998. pp. 41-46.

ABSTRACT: A summary of currently used techniques for estimating turning movements using Kruithoff's algorithm is presented. It is a model that has historically been used outside the United States. The principles of the algorithm and related application techniques are described and a case study from a Denver data set is given as an example. The author presents an algorithm presented by Hauer et al. (listed in this bibliography) to be effective.

APPENDIX D
Example Turning Movement Forecast

Turning Movements:

In performing a turning movement, there is no one "exact" way—rather a group of basic methods applied by the user. The end product normally depends on user preference. Here are methods that we currently use:

If the turning movement is to be performed on a three legged intersection, the usual practice is to take the traffic history of the approaches, normally using counts from the last 10 years (if available) to present day to establish an actual count line for each road. Then, a trend line is created, normally using a spreadsheet, such as MS Excel, or a projection program. The trend line is a "best fit" projection using the least squares method, based on the actual counts. If there are extreme outliers (and there usually are) they can be either discarded from the data sample, or the trend line adjusted upward or downward. If there is no traffic history data available for a road(s) the an "area" wide growth factor can be used. I believe the "trend" function in Excel and Lotus spreadsheets calculates the least squares fit for a line represented by: $y=mx+b$, where m is the slope and b is the intercept.

Where there are extreme out lining data (for example a count that varied more than a thousand over a year) an examination of an average of the growth trend from year to year, may provide a more accurate average growth rate. The percent growth per year which can best be described by the formula:

([Present Year (Example 1999 traffic volume)] / [Past Year (Example 1988 traffic volume)] – 1) / (Number of Years (Example 11)) *100

This formula is equal to the percent growth per year.

For example, using the above formula, if an actual count in 1999 is 2000 vehicles, and an actual count in 1988 was 1000 vehicles—(([2000/1000] –1) / (11)) * 100 = 9.09% growth over that period. Using this formula, you can take the growth rate from year to year of the actual counts, and then take the average rate and project it out to whatever your design year is.

You can use this to calculate the trend for each road, and then proceed to perform the turning movement, by using a factor for each leg. A factor can be provided by an actual turning movement (machine counts or human counts), a traffic model if the location is within an urbanized study area, or can be an average growth rate from the two roads. Which of these methods is used generally depends on the location, amount of traffic, and availability of machine counts or human counts in the field.

Finding the factor for a turning movement is the tricky part of the equation. If the two roads have very disproportionate amounts of traffic, or have very different rates of growth, an average factor for the entire intersection (i.e., a factor used to "bump up" each leg of the intersection) may not work. This scenario requires using a different growth factor for each leg. Within our Division, the 24 hour ADT is normally (but not always)

balanced (i.e., whatever traffic goes in must come out, for every movement in one direction, there must be an **equal and opposite** movement). (NOTE: Balancing of the 24 hr ADT is not required, in this case, it is a section policy). AM and PM Peak hour turning movements are not balanced. Finding the turning movement factor normally requires hand calibration and patience. Some planners use a matrix-based method or Fratar model to perform this type of turning movement. However, the development of this model can take some time, and is generally as effective as hand calibration.

Depending on the circumstances—for example, if there were a large intersection of two primary routes (four legs) without a previous turning movement, field data would be the most desirable information to obtain. If at all possible, a 24 hour machine classification count and actual field observation for a 12 hour turning movement would provide ample information for a base year turning movement for a projection.

Normal procedure involves providing a present day 24 hour, ADT turning movement, as well as the present PM Peak turning movement. The balanced future ADT turning movement is also supplied as well. Procedure is normally to first check files for previous traffic requests, Corridor Studies, and Urban Plans. Traffic should fall in line with previous traffic given out—especially with Transportation plans, unless there is a valid reason why they are different.

Here is an attached spreadsheet providing an example of a trend line, and a turning movement.

MS Excel Spreadsheet Example
Brunswick Co. Rte. 46

Years

Actual Counts, from Traffic History

The Forecast ADT using Excel's "Trend" Function (linear growth projection using least squares)

Year	Actual Count	Forecast ADT
1981	2695	2498
1982.	2495	2657
1983	2775	2815
1984	2875	2974
1985	3170	3133
1986	3250	3292
1987	3420	3450
1988	3595	3609
1989	3365	3768
1990	3375	3927
1991	4900	4085
1992	4700	4244
1993	5000	4403
1994	4700	4561
1995	4300	4720
1996	4400	4879
1997		5038
1998		5196
1999		5355
2000		5514
2001		5673
2002		5831
2003		5990
2004		6149
2005		6307
2006		6466
2007		6625
2008		6784
2009		6942
2010		7101
2011		7260
2012		7419
2013		7577
2014		7736
2015		7895
2016		8053
2017		8212
2018		8371
2019		8530

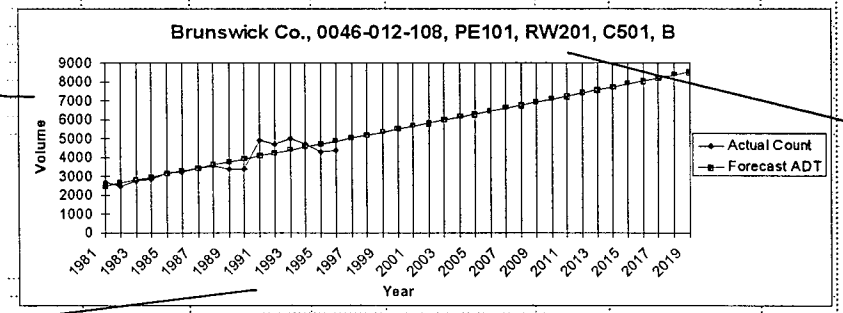

Traffic Volume

Year

Graph Plotting Traffic History , The Traffic Trend (Straightline) to 2021

Base Year 24 Hour ADT Turning Movement Example

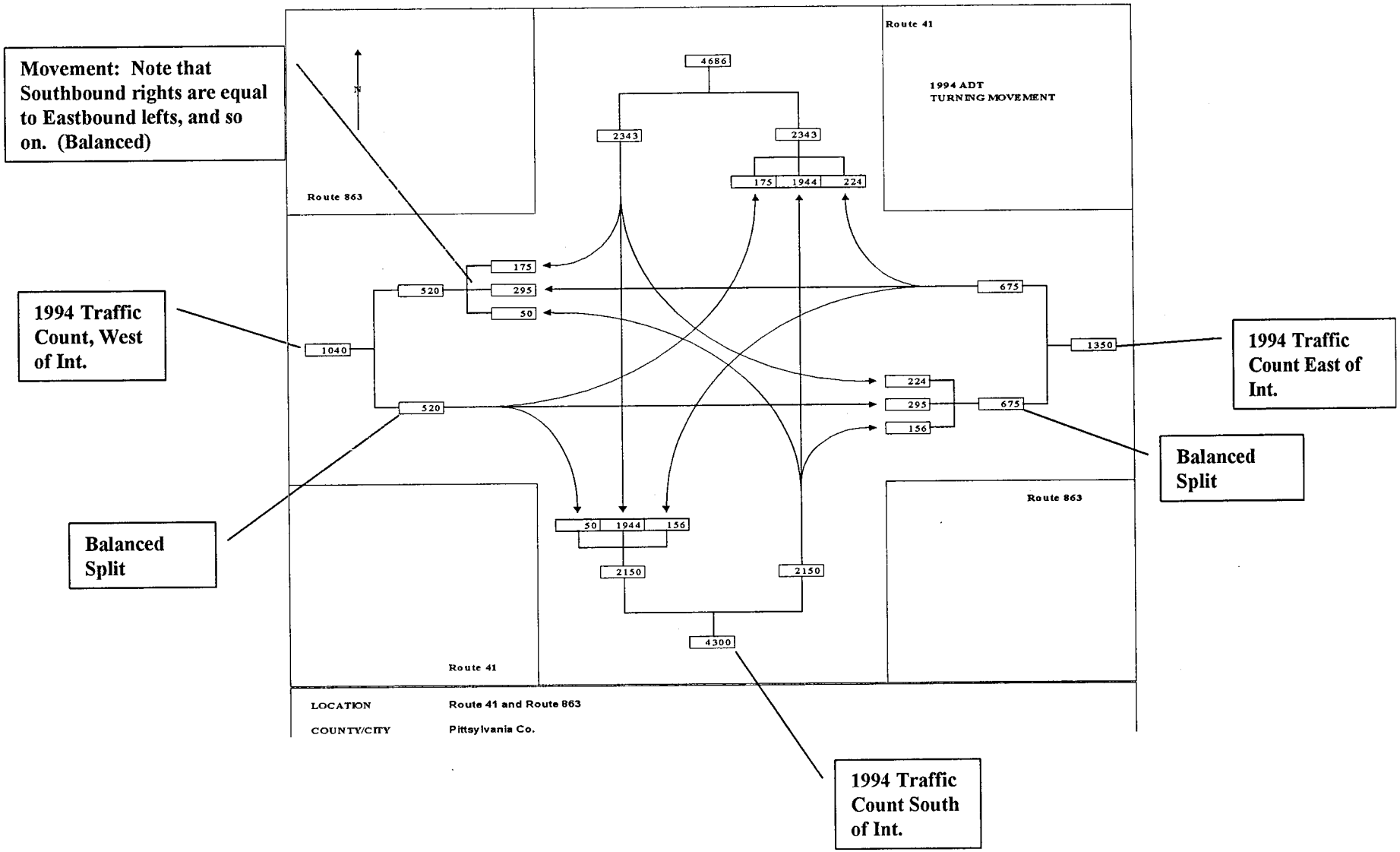
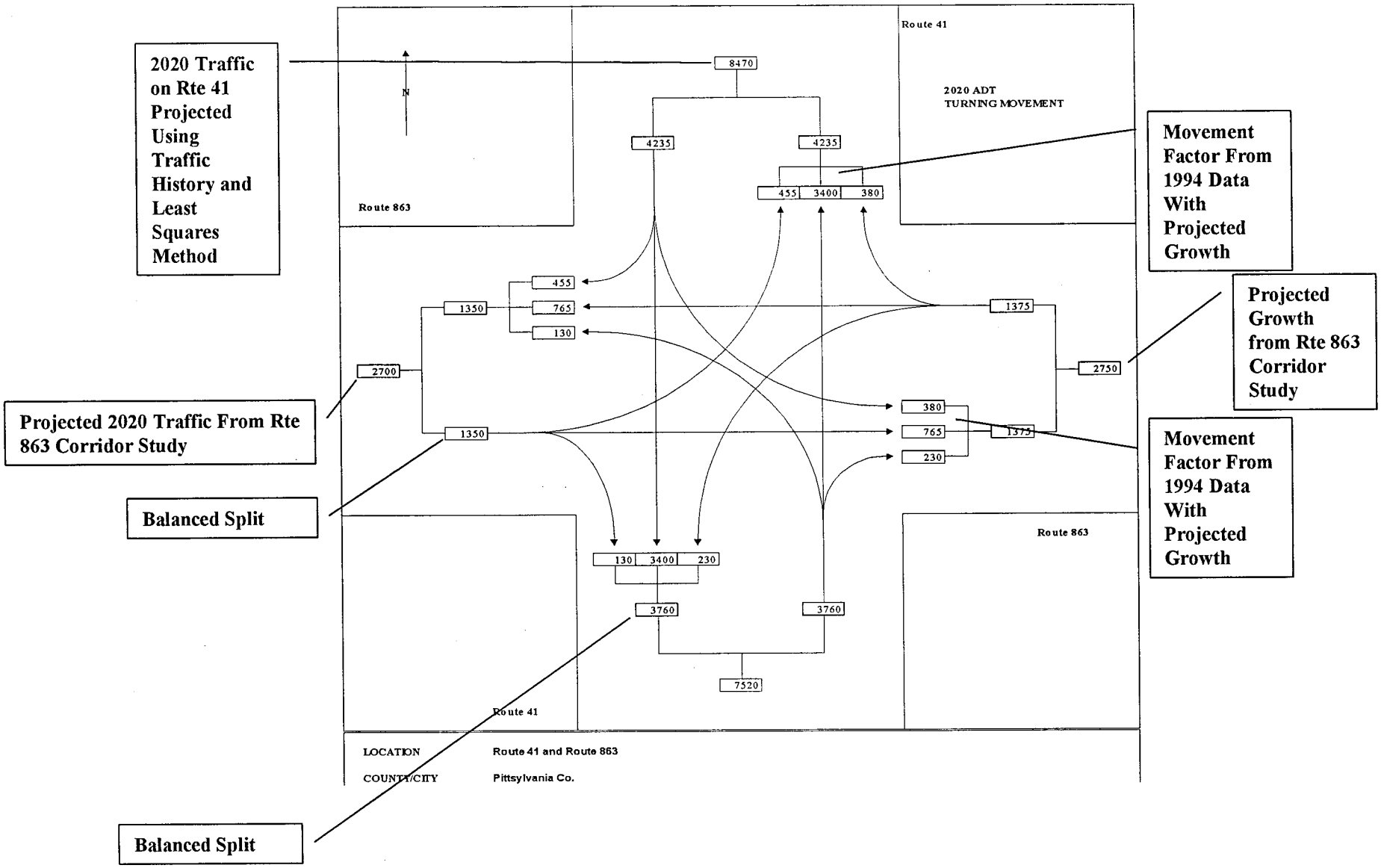
2020 ADT Turning Movement Example