PROJECT SUMMARY REPORT 1788-S

EVALUATION OF THE CAPE SEAL PROCESS AS A PAVEMENT REHABILITATION ALTERNATIVE

Mansour Solaimanian and Thomas W. Kennedy

CENTER FOR TRANSPORTATION RESEARCH
BUREAU OF ENGINEERING RESEARCH
THE UNIVERSITY OF TEXAS AT AUSTIN

OCTOBER 1998

Technical Report Documentation Page

1. Report No.	2. Government Accession No.	3. Recipient's Catalog No.
FHWA/TX-99/1788-S		

4. Title and Subtitle	5. Report Date
EVALUATION OF THE CAPE SEAL PROCESS AS A PAVEMENT REHABILITATION ALTERNATIVE	October 1998
	6. Performing Organization Code
7. Author(s)	8. Performing Organization Report No.
Mansour Solaimanian and Thomas W. Kennedy	1788-S
9. Performing Organization Name and Address	10. Work Unit No. (TRAIS)
Center for Transportation Research The University of Texas at Austin 3208 Red River, Suite 200 Austin, TX 78705-2650	11. Contract or Grant No. 0-1788
12. Sponsoring Agency Name and Address	13. Type of Report and Period Covered
Texas Department of Transportation Research and Technology Transfer Section/Construction Division P.O. Box 5080 Austin, TX 78763-5080	Project Summary Report (9/97 — 8/98)
	14. Sponsoring Agency Code

15. Supplementary Notes

Project conducted in cooperation with the Federal Highway Administration.

16. Abstract

A 1-year research project was sponsored by TxDOT and conducted by University of Texas at Austin researchers to evaluate the Cape seal process as a pavement rehabilitation technique. During the course of this research project, most of the Cape seal projects that have been constructed within the state were visited as part of the evaluation. Projects documented during the visits included both successes and failures. Of the failed projects, most of the problems could be attributed to the underlying chip seal failing as a result of aggregate loss or insufficient chip seal-pavement bond.

As part of this investigation, the researchers performed a series of laboratory tests. Specifically, permeability tests, shear tests, and loaded wheel tests were performed on laboratory-made Cape seal specimens. Permeability tests were also conducted using field cores. The results indicated that the permeability of microsurfacing does not exceed that of typical hot mix asphalt overlays. If properly constructed, microsurfacing can result in a permeability lower than that associated with coarse hot mix asphalt concrete (HMAC) mixes.

The shear tests were performed in a repeated mode at 58 °C, a typical hot pavement temperature for Texas. The tests indicated that debonding failure most often occurs at the interface of the chip seal and the underlying pavement, rather than at the interface of the chip seal and the microsurfacing. However, partial movement of the microsurfacing and the chip seal — though not as severe as the first mode discussed — could be observed.

Excellent performance was observed for microsurfacing specimens under loaded-wheel tests (LWTs). However, specimens prepared as Cape seals failed after a limited number of cycles. This finding indicates that the test setup is not well suited for the chip seal/microsurfacing combination (i.e., it is not necessarily indicative of a bad mixture). This is the case because of the very smooth frictionless surface of the specimen mounting plate under the chip seal. However, the test underscores the significance of a good bond between the chip seal and the underlying layer. Based on the field observations and the laboratory results, a set of guidelines are provided that can improve Cape seal performance.

17. Key Words	18. Distribution Statement
Cape seal process, pavement rehabilitation, asphalt pavement	No restrictions. This document is available to the public through the National Technical Information Service, Springfield, Virginia 22161.

19. Security Classif. (of report)	20. Security Classif. (of this page)	21. No. of pages	22. Price
Unclassified	Unclassified	96	

Form DOT F 1700.7 (8-72) Reproduction of completed page authorized

EVALUATION OF THE CAPE SEAL PROCESS AS A PAVEMENT REHABILITATION ALTERNATIVE

Mansour Solaimanian

and

Thomas W. Kennedy

Project Summary Report 1788-S

Research Project 0-1788

Project Title: *Evaluation of the Cape Seal Process as a Pavement Rehabilitation Alternative*

Conducted for the

TEXAS DEPARTMENT OF TRANSPORTATION

in cooperation with the

U.S. DEPARTMENT OF TRANSPORTATION
FEDERAL HIGHWAY ADMINISTRATION

by the

CENTER FOR TRANSPORTATION RESEARCH
Bureau of Engineering Research
THE UNIVERSITY OF TEXAS AT AUSTIN

October 1998

IMPLEMENTATION RECOMMENDATIONS

The results of this study can be used to develop a comprehensive, helpful, and practical construction guide, one that could establish construction practice for Cape seal implementation. Such a guide could then be expanded into a specification for Cape seal construction. This initiative would eliminate industry confusion regarding selection of proper construction practice for Cape seals. The following are the implementation recommendations for this study:

1. It is recommended that two types of studies be pursued to validate or strengthen the findings of this study. First, it is suggested that a series of test sections having similar traffic and climatic conditions be constructed. For each condition, the test sections will include:

   - emulsions, AC+latex, AC15-5TR
   - different aggregate sizes
   - different times for exposure of chip seal to traffic before microsurfacing
   - different application rates for chip seal construction and microsurfacing

   For the last item, the application rate for the microsurfacing will be selected to create a nodular situation, as well as full coverage, of the chips. This will be an extensive field study, one that will provide the basis for a good comparison and for the establishment of best criteria.

2. It is also suggested that the laboratory tests carried out during the course of this research program be conducted on a larger number of specimens covering a wide spectrum of emulsions, polymer-modified asphalt concretes (ACs), aggregates, and microsurfacing. The specimen mounting plate for the LWT should be replaced by a rougher plate so as to prevent severe movement of chip seal under the loading conditions of the test. It is also recommended that the LWT be conducted under temperature conditions that simulate high pavement temperatures.

3. The performance of seals under adverse conditions could be explored by constructing experimental laboratory seal strips and then testing these with TxDOT's model mobile load simulator (MMLS). This could be further improved quality-wise by utilizing a newly developed upgrade of the mobile load simulator (MLS), namely, the 1/3-scale model, dubbed the MMLS MkIII. This device has been specifically developed to test asphalt surfaces with rolling pneumatic tires under laboratory-controlled conditions using accelerated aging. In this regard, the results of tests using the MMLS for validating Superpave design parameters could serve as an excellent source of information.

ACKNOWLEDGMENTS

The success of this project was made possible through the cooperation and assistance of a number of dedicated people. Special thanks are extended to the project director of the research study, Lenny Bobrowski, of the Austin District, who provided the research team with valuable guidance throughout the course of the program. The dedicated assistance of engineers and personnel from various districts of the state, in regard to the visual survey of the projects, is greatly appreciated.

Special thanks are extended to Professor Fred Hugo for his very helpful assistance and guidance. We are highly grateful to Barry Dunn of Viking Construction and James Moulthrop of Koch Materials, both of whom assisted the research team with inspecting the Cape seal projects and provided invaluable guidance and useful information throughout the course of the research program.

David Straud from Ergon Materials provided the team with the emulsions for microsurfacing and Cary Brownlee and his staff from Koch provided the HFRS-2P emulsion for preparation of seal coat specimens. Their support is greatly appreciated. The assistance of Pierr Peltier from Koch Materials is greatly appreciated for providing the list of Cape seal projects and gathering the initial valuable information on the construction of the projects.

The authors also acknowledge the efforts of Bill Elmore, who assisted the research team with the visual survey of the projects. The support of the Center for Transportation Research (CTR) is also greatly appreciated.

DISCLAIMERS

The contents of this report reflect the views of the authors, who are responsible for the facts and the accuracy of the data presented herein. The contents do not necessarily reflect the official views or policies of the Federal Highway Administration or the Texas Department of Transportation. This report does not constitute a standard, specification, or regulation.

There was no invention or discovery conceived or first actually reduced to practice in the course of or under this contract, including any art, method, process, machine, manufacture, design or composition of matter, or any new and useful improvement thereof, or any variety of plant, which is or may be patentable under the patent laws of the United States of America or any foreign country.

NOT INTENDED FOR CONSTRUCTION,
BIDDING, OR PERMIT PURPOSES

Thomas W. Kennedy, P.E. (Texas No. 29596)
Research Supervisor

TABLE OF CONTENTS

CHAPTER 1. INTRODUCTION 1
NEED FOR MAINTENANCE AND REHABILITATION 1
WHAT IS CAPE SEAL? 1
BACKGROUND REGARDING USE OF CAPE SEAL 2
USE OF CAPE SEAL IN TEXAS AND THE ASSOCIATED PROBLEMS 3
OBJECTIVES AND THE RESEARCH APPROACH 4

CHAPTER 2. CONSTRUCTION PRACTICE AND SITE INVESTIGATION 7
PREVIOUS AND CURRENT PRACTICE IN CAPE SEAL CONSTRUCTION 7
SITE VISITS AND VISUAL INSPECTION 9
TYPICAL DISTRESSES IN CAPE SEALS 15

CHAPTER 3. EXPERIMENTAL PROGRAM 17
LABORATORY STUDY 17
MATERIALS USED FOR THE LABORATORY TESTS 17
PERMEABILITY TEST 18
EQUIPMENT USED 23
SHEAR TESTS 25
LOADED-WHEEL TEST 28

CHAPTER 4. DISCUSSION OF RESULTS AND GUIDELINES 31
CONDITIONS OF EXISTING PAVEMENT 32
SELECTION OF MATERIALS 32
AGGREGATE SELECTION 32
AGGREGATE SIZE 33
PROPER CHIP SEAL CONSTRUCTION 33
CLIMATIC CONDITIONS 34
WHERE CAPE SEAL SHOULD BE USED 34
APPLICATION RATE OF MICROSURFACING 35
COST-EFFECTIVENESS ANALYSIS 36

CHAPTER 5. CONCLUSIONS AND RECOMMENDATIONS 41
CONCLUSIONS 41
RECODMMENDATIONS 41

REFERENCES 43
APPENDIX A 45
APPENDIX B 69

SUMMARY

A 1-year research project was sponsored by TxDOT and conducted by researchers at The University of Texas at Austin to evaluate the Cape seal process as a pavement rehabilitation technique.

During the course of the research project, most of the Cape seal projects that have been constructed within the state were visited as part of the evaluation. Very successful projects as well as serious failures were observed during the visits. Most of the failures could be attributed to the failure of the underlying chip seal as a result of aggregate loss or insufficient chip seal-pavement bond.

As part of the research program, we performed a series of laboratory tests. Specifically, permeability tests, shear tests, and loaded wheel tests were performed on laboratory-made Cape seal specimens. Permeability tests were also conducted on field cores. The results indicate that the permeability of microsurfacing does not exceed that of typical hot mix asphalt overlays. If properly constructed, microsurfacing can result in a permeability lower than that of coarse hot mix asphalt concrete (HMAC) mixes.

The shear tests were performed in a repeated mode at 58 °C, a typical hot pavement temperature for Texas. The tests indicated that most of the debonding failure occurs at the interface of the chip seal and the underlying pavement, rather than at the interface of the chip seal and the microsurfacing. However, partial movement of the microsurfacing and the chip seal could be observed, though such movement was not as severe as that of the first mode discussed.

Excellent performance was observed for microsurfacing specimens under loaded-wheel tests (LWTs). However, specimens prepared as Cape seals did not perform well, many having failed after a limited number of cycles. This observation is indicative of the fact that the test setup is not well suited for the chip seal/microsurfacing combination; it is not necessarily indicative of a bad mixture. This is the case because of the very smooth frictionless surface of the specimen mounting plate under the chip seal. However, the test does underscore the significance of a good bond between the chip seal and the underlying layer.

Based on the field observations and the laboratory results, a set of guidelines are provided for improving Cape seal performance.

CHAPTER 1. INTRODUCTION

NEED FOR MAINTENANCE AND REHABILITATION

The maintenance/preservation of highways currently represents a primary responsibility of state highway agencies (SHAs). Underscoring the scope of such operations is the fact that the percent of funds allocated to new route construction nationally fell from 24 percent in 1989 to 14 percent in 1993, whereas allocations for restoration, rehabilitation, and resurfacing increased from 53 percent to 66 percent within the same time frame (1). At the same time, determining when to rehabilitate, as well as what type of treatment is required, tends to be constrained by the schedules and budgets of the individual SHAs. Because of budget limitations, agencies must seek the most cost-effective method of pavement preservation. In terms of extending pavement life, then, the challenge is to identify the method that provides the best treatment at the least cost.

Texas, with the largest network of highways in the country, has approximately 120,000 kilometers of its roads paved with asphalt. Clearly, such a large road network requires constant maintenance and preservation. Accordingly, the Texas Department of Transportation (TxDOT) has been aggressive in its pursuit of the best, most cost-effective methods for maintaining roads. Among the conventional surface treatment methods, chip seal and thin hot mix overlays have been the most commonly used by TxDOT. However, a major problem with chip seals is the consequent loss of aggregate and damage to vehicles (other problems include streaking and bleeding). In addition, application in cold weather can lead to premature failures. In looking at alternative solutions, TxDOT has investigated the use of such emerging treatment methods as stone matrix asphalt, Novachip, and microsurfacing. Again, however, a number of problems have been associated with microsurfacing. Moreover, this type of treatment is not adequately capable of preventing reflective cracking. As a result, TxDOT has been seeking more effective treatment techniques to extend pavement life. To this end, the process known as *Cape seal* has been used by TxDOT on several projects. In all these cases, Cape seal has been used as a rehabilitation process rather than as a preventive maintenance measure.

WHAT IS CAPE SEAL?

Cape seal consists of a chip seal covered by a slurry seal or a microsurface. The Cape seal, if constructed properly, provides a smooth, dense surface, one having good skid resistance and a relatively long service life. Cape seal, in addition, provides a durable and an impervious surface. The rich slurry mix over the chip seal eliminates the problem of loose aggregate, holds stones of the seal coat firmly in place, and reduces traffic noise. Construction is performed in a delicate two-step surfacing operation involving the application of two layers — a chip seal and a slurry. Given the delicacy of the operation, there should be clear and effective communication between the contractor constructing the

chip seal and the contractor applying the microsurfacing. It should also be noted that the chip seal and the covering slurry are integrated in a Cape seal and should not be treated as separate layers.

Cape seal can be a very successful method of treatment — provided the operation is performed according to well-established procedures. For that reason, it is important to establish guidelines for the use of Cape seal as a pavement rehabilitation technique. Development of such guidelines is an essential task, considering the failures associated with several Cape seal projects.

BACKGROUND REGARDING USE OF CAPE SEAL

The Cape seal process was developed in South Africa by the Cape Province, centered around Cape Town in South Africa. It grew out of a process of applying a hot premix of crusher dust and asphalt over a 19-mm seal. This procedure, first specified in 1950 (CAPSA 1979), was largely an effort to improve the durability of the existing single- and multicoat chip seal methods; initially, it was used only on new roads whose traffic did not exceed 300 heavy vehicles per day. Hot mix was used as a wearing course on the more heavily trafficked roads. With time, improvements made to this practice led — around 1957 — to the modern Cape seal process: a 19-mm chip seal coated with two layers of slurry seal and a 13-mm chip seal coated with a single layer of slurry.

In Australia, the use of Cape seals dates back to early sixties and, as in South Africa, was used primarily for new construction. In Australia's practice, anionic slurry was applied over large stone chip seals to improve ride and to increase durability. More recently, the process has been used in an indirect manner, such that the slurry is used as a rehabilitation method over chip seals as a means of replenishing binder (as the seal ages). Slurry in this instance is used as a void filler. Any sized stone from 7 to 20 mm may be used in the chip seal with Type I or Type II slurry.

The first projects using Cape seal in the U.S. represent technology transferred from South Africa, much like the transfer that has occurred in recent years regarding stone mastic asphalt (SMA). The Cape seal process appears to have been introduced by Robin Campbell in a paper submitted to the 1977 International Slurry Surfacing Association (ISSA) (2).

Following this introduction, a number of Cape seal projects were undertaken on northern California's farm arterial roads using chip seals applied with a 6–7 mm top size stone and a Type II slurry; city streets and major roads used 9–10 mm top size aggregate and Type II slurry. (In this instance, heavier traffic generally requires a larger stone in the chip seal; the slurry remains unchanged, as it is essentially a void filler. Type I slurry has also been used for this purpose.)

Yet the market for the Cape seal process did not much grow in the years following, mainly because the application of chip seal and slurry seal were considered separate processes. This could lead to technical problems of aggregate overspread in the chip seal, asphalt emulsion levels being too high in either the chip seal or the slurry, slurry being

overapplied and totally covering the chip seal, or excessive chip loss in the chip seal before slurry application. These problems sometimes lead to poor surface finish, poor skid resistance, bleeding, and a general perception that Cape seals are not as effective as advertised.

Many of these problems were largely rectified in California by the emergence of contractors who carried out both chip and slurry work. In 1984 an upswing in use began with northern California, in cities like Salinas and Sacramento. Here the process was used for arterial roads and residential areas. In the early nineties, about 15 percent of surface dressing had been carried out in cities using Cape seal, with about 5 percent of the work carried out in counties. The numbers are somewhat misleading in that many counties do their own chip seals, and slurry may or may not be applied as a part of a Cape seal. Developments that have abetted the increase in Cape seal deployment relate to the use of modified binders to promote crack resistance and increase stone retention.

In terms of the cost-effective rehabilitation of pavements, Cape seals fill the gap between straight surfacings (such as slurry and chip seals) and hot-mixed asphalt. Cape seals are viewed as alternatives to more costly overlays. In general, a well-constructed Cape seal should not require resealing for a relatively prolonged period. The Cape seal provides a dense surface having good skid resistance and a relatively long service life. The slurry or microsurfacing over the chip seal eliminates the problem of loose aggregates and can reduce traffic noise. These advantages are achieved by holding the chip seal aggregates in place by a high quality slurry mix. Using Cape seal for surface treatment results in a higher cost compared with, for example, the application of a single-layer chip seal. However, Cape seal will be more cost effective if, through proper construction, the life of the rehabilitated pavement is considerably extended, without dealing with problems associated with chip seals.

While the literature on Cape seals is limited, there is a considerable amount of information relating to the *components* of Cape seal treatment, i.e., chip seals, slurry seals, and microsurfacing. Chip seals are covered extensively, especially in a recent publication (3) that describes its application on high volume roads. A field evaluation of surface treatments and slurry seals is also reported by Mills (4), who selected 500 projects for evaluation and rating. Defects observed and cited by Mills vary widely and include bleeding, raveling, streaking, cracking, uneven riding, poor drainage, and weak base. In pursuing the literature, we detected a lack of information on guidelines and procedures for Cape seal treatments. In most cases, brief discussions are presented in the literature regarding the definition of Cape seal and its advantages.

USE OF CAPE SEAL IN TEXAS AND ASSOCIATED PROBLEMS

Texas is among the few states that have been using Cape seal as a preventive maintenance or rehabilitation strategy. While in some of the districts it has been common practice to cover an old layer of chip seal (months and years old) with microsurfacing, not

until recently (since the early nineties) have chip seal and microsurfacing been sequentially combined — i.e., a layer of microsurfacing placed over a newly built layer of chip seal — within the same construction project.

Despite Texas being among the few states using Cape seal, the deployment of this maintenance/rehabilitation strategy has been limited to a few Texas districts. Even the construction of microsurfacing alone is not yet widely practiced throughout the state (the use of the chip seal as a surface treatment technique is more common). In spite of this, microsurfacing has become an increasingly popular pavement rehabilitation alternative to seal coats and hot mix asphalt concrete (HMAC) overlays, providing as it does satisfactory service in most situations. However, reflection cracks that develop rapidly in microsurfacings have been a major problem in areas where microsurfacing has been placed over pavements that have experienced fatigue or alligator cracking. On the other hand, problems with aggregate loss, windshield damage, and a rough riding surfaces discourage wide use of chip sealing by itself. Thus, the two procedures have been combined to provide the benefits of both (better crack prevention and less water permeation provided by the chip seal, combined with the retention of aggregates and skid resistance provided by microsurfacing), while avoiding the disadvantages of each. Some of the districts do chip seal/microsurface to extend pavement life a few additional years (3 to 5 years), with the expectation that funds will at some point become available for a major rehabilitation with a hot mix overlay. However, South African experience with Cape seal projects has indicated that surfaces need not be resealed even after being exposed to heavy trucks for 7 to 10 years.

The few Cape seal projects built thus far in Texas have exhibited both good and poor performance. To be sure, TxDOT has been concerned about the poor performance and the premature failures observed on some of the projects built under this recently introduced technology (bleeding and shoving have been the most common problems identified so far). This research project was initiated and sponsored by TxDOT to address the need to develop and apply guidelines and procedures in the selection and utilization of Cape seal as an effective rehabilitation technique. This project, conducted by The University of Texas at Austin, undertook to review the associated problems and to develop guidelines to be used in construction practice. TxDOT's experience with Cape seal projects over the last decade was to be used as the framework for this endeavor.

OBJECTIVES AND THE RESEARCH APPROACH

The main objective of this research project has been the evaluation of the Cape seal construction procedure and the development of guidelines to improve the current practice. To achieve these objectives, the following activities have been pursued during the course of this research program.

- Survey and evaluate existing procedures for Cape seal construction
- Visit sites and visually inspect the constructed projects
- Undertake laboratory testing and investigate microsurfacing and Cape seals

The existing construction procedures for Cape seal and the conditions of the pavements inspected during the research program are presented in Chapter 2. The laboratory study is discussed in Chapter 3. Guidelines based on the findings of this study are presented in Chapter 4. The last chapter provides conclusions and makes recommendations for further investigation and analysis.

CHAPTER 2. CONSTRUCTION PRACTICE AND SITE INVESTIGATION

PREVIOUS AND CURRENT PRACTICE IN CAPE SEAL CONSTRUCTION

A survey was conducted to review Cape seal application and current practices. Different states, as well as some countries, have deployed Cape seals to various degrees. The practice and performance experiences of the constructed projects were obtained both through literature and through contact with knowledgeable authorities. Information was also obtained from Texas Department of Transportation (TxDOT) districts with regard to their experience with Cape seal projects. Information on South African practice was obtained for comparison with current U.S. seal coat construction techniques.

Cape Seal Construction, South African Practice

Cape seal has been used in South Africa for new construction since the late fifties. The method was originally developed in South Africa by the provincial administration of the Western Cape. The South African Cape seal consists mainly of a single seal of 13-mm or 19-mm aggregate penetrated with a binder and covered with a slurry seal (2). The 13-mm aggregate is covered with one layer of slurry, whereas for the 19-mm aggregate the slurry is applied in two layers. The size of the aggregate is selected based on the traffic level. The following is given as a guide:

Traffic Level	Aggregate size
< 7500 elv/lane/day	13 mm
> 7500 elv/lane/day	19 mm

The term *elv/lane/day* is used to express traffic volume as the number of equivalent light vehicles per lane per day. *Equivalent light vehicles* is determined as the sum of the light vehicles and 40 times the number of heavy vehicles.

The appropriate binder content in the slurry used with a Cape seal depends on whether the traffic will drive directly on the slurry or on top of the large aggregate. If the slurry is applied by hand, it will flow between the large aggregate particles irrespective of the shape of the road. In this case, the slurry will be able to accommodate high binder content without any risk of bleeding. However, if the slurry is applied with a spreader box on an uneven surface, there will be areas where the slurry will cover the large aggregate and will, therefore, be in direct contact with the tires. In this case, it is recommended that a lower binder content be selected, one similar to the binder content of a slurry applied as a slurry seal. A heavy pneumatic compactor rolls on the chips, making a minimum of eight passes.

Cape seal, in its nodular form, is a single layer of aggregate placed shoulder to shoulder on a film of asphalt with a layer of slurry filling the interstitial voids of the chip seal and leaving the tops of the stone exposed.

According to Campbell (2), Cape seal results have been extremely satisfactory in South Africa: Numerous sections of road in the 500 vehicles/lane/day (with heavy trucks) category have not been resealed after 7 to 10 years.

Experience of States

Cape seal construction is by no means widely practiced in the U.S. Virginia and California are among the few states that have been experimenting with Cape seal.

With respect to Virginia, there have been three Cape seal projects reported to have been constructed on that state's mountainous roads (5). In all cases, a CRS-2 type emulsion was used for the seal coat, along with a 10-mm maximum sized granite aggregate applied at rates in the range of 7.7 to 8.2 kg/m^2. The slurry has been covering the chips completely. In one of the test sections, there was a 30-day time delay between construction of the seal coat and application of microsurfacing, with considerable loss of aggregate and some windshield damage reported. In the other two projects, there was a 3-day delay before slurry was placed over the chip seal. These two projects have been very successful and have demonstrated very good performance. The microsurfacing was applied at a rate of about 12 kg/m^2. The cost of the constructed Cape seal was reported to be about $1.30 to $1.40 per square meter (about half the cost of a 38-mm hot mix asphalt concrete [HMAC] overlay, which typically costs about $2.70 per square meter).

Although the California Department of Transportation has not been experimenting with Cape seal, it has made extensive use of chip seals with emulsions and polymer-modified and tire-rubber modified asphalts. Precoated 10-mm aggregates are mainly used with tire-rubber-modified asphalt. Slurries are also utilized, but not in connection with chip seals. City and county officials within the state have, however, rehabilitated roads using Cape seal techniques, primarily to provide a skid-resistant surface and a good appearance (important in terms of favorable public perceptions). The slurry seal is applied at a rate of about 9.8 kg/m^2 about 48 hours after the application of the asphalt-rubber chip seal. The constructed Cape seals have apparently been performing very well and have been effective in preventing reflective cracking. The life expectancy of the constructed Cape seals is about 10 years (roughly equivalent to 50 mm of hot mix asphalt). The cost is about 35 percent less than that for a 50-mm HMAC overlay (6).

SITE VISITS AND VISUAL INSPECTION

As an important part of this research effort, we visited about twenty Cape seal projects within Texas. Table 2.1 lists the projects visited (the list covers the majority, if not all, of the Cape seal projects constructed in the state), while Table 2.2 identifies the projects' aggregate and asphalt/emulsion composition. The projects are distributed across seven

districts and thirteen counties. In most cases a Grade 5 chip seal is used; in one case Grade 3 was used, while three other projects were built using a Grade 4 chip seal. Emulsions, unmodified binders, polymer-modified binders, and tire-rubber asphalt were all used for these projects. Detailed information regarding each project is provided in Appendix A.

Table 2.1. List of Cape seal projects visited during the research program

No.	Date Let	District	County	Project Number	Highway	Kilometers
1	Feb-95	Atlanta	Titus	IM 30-3 (91) 153	IH-30	44.3
2	May-05	Atlanta	Titus	STP 96 (52)R	US 271	1.88
3		Austin	Bastrop		HW 21	
4	Feb-94	Austin	Hays	IM36-3(172)204	IH-35	6.7
5	Feb-92	Austin	Williamson	CPM 15-8-95	IH-35	21.3
6		Austin	Williamson		IH-35, BL	
7	Jun-93	Austin	Burnet/Will	CPM-251-8-22	US 281	19.6
8	Jan-95	Austin	Travis	CPM 3136-1-95	LP1	28.4
9	Feb-97	Austin	Travis	CPM 3136-1-105	LP 1	5.3
10	Feb-96	Austin	Travis	IM 36-3(191)240	IH-35	10.9
11		Austin	Travis		IH-35	
12	Jan-97	Ft. Worth	Wise	CPM 13-8-97	US 281	16.1
13	Apr-97	Odessa	Pecos	IM 10-2 (92)281	IH-10	31.7
14	Mar-96	Paris	Rains	CPM200-3-34	US 69	
15	Mar-95	Tyler	Henderson	STP 96 (182)R	SH 19	39.4
16	Mar-96	Tyler	Smith	IM 20-6(74)572	IH-20	22.1
17		Tyler	Smith		SH 155	
18	Feb-95	Waco	Bell	IM 36-4 (183)278	IH-35	19.7
19	Dec-96	Waco	Bell	NH 97 (40)	US 190	43.9
20		Waco	McLennan		SH 6	

Table 2.2. Cape seal projects' aggregate and asphalt/emulsion composition

No.	District	County	Highway	Year Built	Aggregate Type	Asphalt/ Emulsion
1	Atlanta	Titus	IH-30	1995	L, GR 4	AC15-5TR
2	Atlanta	Titus	US 271	1995	LW,GR 4	CRS-2P
3	Austin	Bastrop		1997	B, GR 5	HFRS-2P
4	Austin	Hays	IH-35	1994	B, GR 5	AC-5&10+latex
5	Austin	Williamson	IH-35	1992	GR 5	HFRS2/2P
6	Austin	Williamson	IH-35, BL		B, GR 5	HFRS2-P
7	Austin	Burnet/Will	US 281		GR 5	HFRS2-P
8	Austin	Travis	LP1	95/96	B, GR 5	AC10+Latex
9	Austin	Travis	LP 1	1997	B, GR 5	AC10+Latex
10	Austin	Travis	IH-35	1996	B, GR 5	AC10+2%Latex
11	Austin	Travis	IH-35	1995	B, GR 5	AC-5
12	Ft. Worth	Wise	US 281	1997	B, GR 4	CRS-2
13	Odessa	Pecos	IH-10	1997	B, GR 5, Prec	AC10+Latex
14	Paris	Rains	US 69	1996	B, GR 5	CRS2-P
15	Tyler	Henderson	SH 19	1995	B, GR 5	AC10
16	Tyler	Smith	IH-20		B, GR 5	AC10
17	Tyler	Smith	SH 155		B, GR 5	AC10
18	Waco	Bell	IH-35	1995	B, GR 5	HFRS-2P
19	Waco	Bell	US 190	1997	B, GR 5	AC-15-5TR
20	Waco	McLennan	SH 6	1993	B, GR 3	AC +Latex

Highway US 281, Wise County, Fort Worth District

We visited a section of US 281 on November 25, 1997. Highway US 281, stretching from the southeast of the state all the way through the northwest, is a four-lane highway (two lanes on each side) between Dallas/Fort Worth and Wichita Falls.

The seal coat/microsurface is built over an old concrete pavement. The surface of this pavement is very slick and has been patched in some areas. Because of its high slickness, some portions of the old concrete pavement were milled to give it a rough surface prior to applying the seal coat/microsurface.

The seal coat on the northbound lanes was constructed within a 2-day time frame (May 5 and 6, 1997). Microsurfacing on the northbound lanes was started on May 8. Thus, there was a 2-day and a 3-day time delay between completion of the seal coat and the start of the microsurfacing. Owing to rain, there was no work performed May 9 through May 11. Microsurfacing on the northbound lanes was continued and completed on May 12.

The seal coat on the southbound right lane was initiated on May 7 and completed on May 8. No work was done May 9 through May 11 and no seal coat was laid on May 12. The seal coat on the southbound (left) lane was started and completed on May 13.

Microsurfacing on the southbound (right) lane started on May 12 (4-day time delay). Microsurfacing on the southbound (left) lane started on May 14 and was completed on the same day (1-day time interval between the finish of seal coat and the start of microsurfacing). Microsurfacing on the southbound (right) lane was continued on May 15 and was completed on the same day, despite morning showers that interrupted the work.

Based on the information available from the construction dates, it appears that the time interval between the completion of the seal coat and the start of the microsurface for different locations varies between 1 to 4 days. It is not clear if this variation has played any role in observed pavement distress. However, with the seal coat operation it is very important to ensure that the seal coat emulsion sets and cures completely before applying the microsurface. It is also important to determine how long it takes the emulsion to cure completely. It appears that a major part of the problem has to do with the considerable aggregate loss under traffic following rain; thus the microsurface in such cases was laid on top of a seal coat having insufficient aggregate. The following are the observations documented during this site visit.

Northbound Right Lane (Driving Lane)

- Severe bleeding and flushing, especially under the wheelpath
- Severe shoving to the sides noticed
- Movement and sliding of the seal coat/microsurfacing over the concrete base noticeable
- Loss of the seal coat and microsurfacing at several spots such that the concrete base is completely exposed at those spots

Northbound Left Lane (Passing Lane)

- Slight bleeding and flushing
- Moderate shoving to the sides noticed
- Loss of the seal coat and microsurfacing at several spots such that the concrete base is completely exposed at those spots

Southbound Right and Left Lanes

- Severe bleeding and flushing, especially under the wheelpath
- Severe shoving to the sides noticed
- Movement and sliding of the seal coat/microsurfacing over the concrete base noticeable
- Loss of the seal coat and microsurfacing at several spots such that the concrete base is completely exposed at those spots

Conditions under the Bridges

- The constructed seal coat/microsurfacing at those sections of the lanes that happen to be passing under the bridge do not exhibit noticeable signs of distresses described above.

Shoulders

- The seal coat covering the shoulders appeared to be in good condition.

Possible Reasons for Observed Distresses

There has been a very weak bond between the seal coat and the underlying slick, old concrete pavement. This weak bond has contributed to sliding and shoving of the seal coat/microsurface structure. It is also possible that the emulsion for the seal coat has been applied at too high a rate (1.82 liters/m^2) for the existing base (old concrete), thus not allowing any absorption or penetration of the binder down into the old pavement. This could have contributed to movement of the binder up to the surface under traffic and hot temperatures, leading to bleeding, flushing, and shoving.

Time Distresses Were Noticed

It has been reported that the first signs of distress were observed about a week after construction, during very hot days in May.

Conclusions

1. The seal coat/microsurface under the bridges appears to be in better condition than the seal coat/microsurface in the exposed areas (these latter areas were highly distressed). This difference is an indication of the important effect of the climatic conditions. The pavement under the bridge is not exposed to the afternoon sun at times of extremely high temperatures. Therefore, it does not get as hot as the pavement in the exposed section. The extremely hot asphalt in the exposed section of the pavement has a lower viscosity and is more susceptible to flow, compared with the section under the bridge. For this reason, bleeding and shoving are severe for areas exposed to the sun, and very slight for the areas under the bridge. This implies that a harder asphalt and a surface having higher friction could have resisted shoving and bleeding under the hot conditions of this region. The other factor, possibly of lesser importance, is that the section under the bridge is not exposed to as much water. This might have made the exposed section more susceptible to aggregate loss and, eventually, to bleeding.

2. The seal coat/microsurface that was constructed on the milled rough concrete section is by far less distressed by flushing and shoving than is the seal coat/microsurface constructed on the unmilled slick surface of the concrete pavement. This is an indication that the slick surface has contributed to the shoving and bleeding problems.

The seal coat on the shoulders was built on an old asphalt concrete pavement and appeared to be in good shape. The shoulders have not been exposed to the heavy traffic traveling on the through lanes. Also, they were built on asphalt concrete rather than on smooth rigid concrete pavement, which was the case for the through lanes. These two observations may explain the good shape of the seal coat on the shoulders, compared with what was observed on the through lanes.

Highway US 190, Bell County, Waco District

This highway is located on the west side of IH-35. The section extends from W. S. Young Boulevard in Killeen to 1.85 kilometers east of SP 439. The underlying layer had been a mildly oxidized HMAC showing hairline cracks. Construction had taken place during the summer of 1997.

AC15-5TR and Type B, Grade 5, aggregate were used for the seal coat. Slight-to-moderate bleeding for most of the road, including severe shoving for one of the sections, was observed. The chips did not have sufficient embedment in the binder. In some sections, it appears that the surface of the microsurface between the wheelpath had been dragged. On the eastbound lane, there was one section with very noticeable shoving to the side and to the front. It appears that, after applying the chips and before placing the microsurfacing, there had been rain and a consequent loss of aggregate. To address the problem of aggregate loss, new binder (AC15-5TR) was shot to the surface at a high rate (1.59 liters/m^2) and then covered with Grade 4 lightweight aggregate.

For this project, as for the previous one, loss of aggregate has played a major role in causing the observed distresses. The use of precoated aggregates could have possibly improved the bond and reduced the aggregate loss. It also appears that using a high rate of binder application a second time on a surface that does not have sufficient coverage of the aggregate has contributed to the problem.

Highway SH 6, McLennan County, Waco District

This highway is covered with chip seal/microsurfacing from the Bosque County line to 2.1 kilometers east of FM 185. The underlying layer includes moderately oxidized HMAC with stripped aggregate at a 75-mm depth. Construction of the chip seal took place during May 1993 and was followed by microsurfacing in June 1993. During October and November 1992, the roadway had received a scratch layer of rut-filling microsurfacing in the

wheelpath. The latex-modified asphalt cement used for the seal coat had been shot at a variable rate (1.82 to 2.73 liters/m^2), though the design application rate has been set at 1.91 liters/m^2. It is quite possible that the poorly controlled binder application rate has contributed to the immediate bleeding and flushing observed after construction. It appears that the seal coat binder had migrated to the surface.

Highway Business Loop 35, Williamson County, Austin District

This surveyed section is located north of Georgetown. The chip seal made with Grade 5 aggregate and HFRS2 emulsion and overlaid with microsurface has a very good appearance, with no noticeable problems after 5 years following its construction.

Highway IH-35, Bell County, Waco District

The segment visited stretches from the Williamson County line to Loop 121 south of Belton. Originally, the underlying HMAC was covered with a layer of microsurfacing in 1989. A Grade 5 chip seal with HFRS-2P was placed over this layer in 1995. A few months later in the same year, microsurfacing was placed on the chip seal.

The pavement section experienced a considerable failure (cracking, disintegrating) within 1 year of placement. Apparently the failure was the result of freezes that occurred over January 12–13, 1996. In such freeze-related failures, water entrapped between the original microsurfacing layer and the underlying HMAC causes debonding between those layers as well as between the chip seal and the original microsurfacing. In addition, the chip seal, which was covered with microsurface, apparently had some aggregate loss (i.e., aggregate loss was noticed on the shoulders that were not covered with microsurfacing).

The fines have been pumped out of the Grade 5 chip seal through water and traffic exposure. The seal coat aggregate is reported to be extremely clean on the bottom, with a light oily coat held together with the top microsurfacing. It is also interesting that the southbound lanes, even though constructed with the same materials and at the same time as the northbound lanes, appeared to be in a considerably better condition, compared with the major failure noticed on the northbound side.

Possible Causes for Failure

There is strong evidence that the combination of the entrapped water and freezing weather have played major roles in the pavement's rapid failure. This problem cannot be related to the Cape seal construction per se. The problem does not in fact differ much from typical moisture-induced stripping problems where, after an HMAC overlay is applied, entrapped water damages the underlying layer. The situation with this specific project is aggravated by the development of freezing conditions. The stripping and damage of underlying layers through prolonged contact with water is a common problem.

Highway US 271, Titus County, Atlanta District

This section of highway, visited on February 6, 1998, lies between IH-30 and FM 899. The Cape seal is constructed over an old HMAC layer. Grade 4 lightweight aggregate with CRS-2P emulsion forms the chip seal placed on August 9–10, 1995. Microsurfacing was applied about a week later, from August 16–22, 1995.

The project in general has a good appearance. There are some cracks observed on the shoulders and on the inside (passing) lane, whereas the outside (driving) lane appears to be in better shape. The explanation for this discrepancy is that the asphalt concrete pavement of the inside lane was badly cracked and was, therefore, completely milled before construction of the Cape seal, which then prevented rapid reflection of the cracks. However, the cracks of the outside lane, not being as severe as those in the other lane, were simply sealed before the application of the Cape seal (with no milling operation). This difference clearly indicates the significance of the condition of the underlying pavement on newly placed treatment.

Highway IH-30, Titus County, Atlanta District

The section visited lies between the Franklin County line and the Sulphur River. The Cape seal is built over a 12-year-old, 50-mm-thick HMAC. AC15-5TR and Grade 4 lightweight aggregate were used for the seal coat built May 22–June 30, 1995. The microsurfacing was placed July 6–August 7, 1995. In some areas, moderate shoving was observed. Reflective fine transverse cracks were also noticed, along with some aggregate loss.

TYPICAL DISTRESSES IN CAPE SEALS

Our visual survey of Cape seal projects indicated that bleeding and shoving are the most common problems associated with this type of surface treatment, even though rutting and cracking were also observed on a number of projects. A summary of the distress evaluations of the visited projects is presented in Table 2.3.

Table 2.3. Distress summary from Cape seal projects visited during the research project

No.	Highway	Agg. Type	Rate m^2/m^3	Asphalt/ Emulsion	Rate Lit/m^2	Micro Rate	Distress	Overall Condition
						kg/ m^2		
1	IH-30	L, GR 4	109	AC15-5TR	1.36	16.3	Some agg. loss and fine cracks	Average
2	US 271	LW, GR 4	98	CRS-2P	1.73		Cracks, inside lane	Good
3		B, GR 5		HFRS-2P			None	Very good
4	IH-35	B, GR 5	179	AC-5&10+latex	1.14		Slight shoving, moderate bleeding	Average
5	IH-35	GR 5	182	HFRS2/2P	1.91		None	Very good
6	IH-35, BL	B, GR 5		HFRS2-P			Wheelpath bleeding, slight rutting, edge crack	Average +
7	US 281	GR 5	168	HFRS2-P	1.00			
8	LP1	B, GR 5	179	AC10+Latex				Average
9	LP 1	B, GR 5		AC10+Latex				Average
10	IH-35	B, GR 5	184	AC10+ 2%Latex	0.82		Slight/moderate flushing	Good
11	IH-35	B, GR 5		AC-5			Bleeding	Average
12	US 81	B, GR 4	114	CRS-2	1.86		Severe shoving/ bleeding	Very poor
13	IH-10	B, GR 5	179	AC10+Latex	1.18			Good
14	US 69	B, GR 5		CRS2-P				Good
15	SH 19	B, GR 5		AC10		13.0	None except some reflective cracks	Good
16	IH-20	B, GR 5	149	AC10	0.91	14.1	Slight rut/spots of flush	Average
17	SH 155	B, GR 5		AC10				Very good
18	IH-35	B, GR 5		HFRS-2P		14.1		Failure
19	US 190	B, GR 5		AC-15-5TR	1.27		Rough appearance, moderate bleeding	Average +
20	SH 6	B, GR 3	103	AC +Latex	1.82/2.73	14.9	Flushed/bled immediately	Poor

CHAPTER 3. EXPERIMENTAL PROGRAM

LABORATORY STUDY

The design of a Cape seal must take into account three distinct aspects:

- The chip seal design
- The slurry design
- The combination effects to achieve the final performance

Coincident with the visual survey of the Cape seal projects, a laboratory study was undertaken to evaluate the behavior — including factors that can affect behavior — of Cape seals constructed using typical design procedures. As part of this study, the interaction between the chip seal and the microsurfacing was investigated. Specifically, the following items were evaluated as part of the laboratory study:

- The deformation resistance of Cape seal versus microsurfacing
- The chip seal/microsurfacing bond and possibility of delamination
- The shear resistance of the chip seal/microsurface interface with other layers above or below
- The permeability of the microsurfacing as well as the permeability of chip seal/microsurfacing

The following laboratory tests were conducted on specimens:

- Permeability test
- Shear constant height repeated test
- Loaded-wheel test (LWT)

The tests and the results are explained subsequently.

MATERIALS USED FOR THE LABORATORY TESTS

1. Microsurfacing

The design prepared by Ergon for a microsurfacing job in Texas was used for the laboratory study. The utilized gradation differed slightly from that of the original design, but was within the acceptable range for a Type II microsurfacing mix (see Appendix B, Figure B.1).

The microsurfacing design used for this study included the following proportions:

Aggregate	100 (percent)
Filler (cement)	1.5
Water	10
Additive	0.1
Emulsion	11

All values are a percent of the mass of the aggregate. Emulsion was a CCS-1HP type and the aggregate was sandstone from Marble Falls (Delta Materials) having a polish value of 38 and a Los Angeles abrasion value of 22. Two different application rates were used to prepare microsurfacing specimens for shear tests: approximately 13.4 Kg/m^2 and 19.5 kg/m^2, labeled "low" and "high," respectively. For LWTs, application rates were approximately 11.6 and 20.6 kg/m^2.

2. Seal Coat

The chip seal was prepared using limestone from Texas Industries (Bridgeport, Texas) having a polish value of 32 and a Los Angeles abrasion value of 32. Two gradations were used, one corresponding to a Texas Type B Grade 5 (on the fine side of Grade 5), and the other corresponding to a Texas Type B Grade 4 (on the coarse side of Grade 4). The gradations used are presented in Figures B.2 and B.3 (Appendix B). The HFRS-2P emulsion used, obtained from Koch Materials, had a specific gravity of 1.018 and an asphalt residue of 71 percent. The application rate of the emulsion varied between 1.5 to 2.3 liters/m^2, depending on the aggregate size.

PERMEABILITY TEST

This test is performed in various ways. For simplicity, a one-dimensional permeation is typically selected, and the coefficient of permeability is measured in one direction. The test results are analyzed and interpreted based on Darcy's law, which presents the following formula:

$$q = kiA$$

where

q = flow rate (amount of flow per unit of time),

k = coefficient of permeability (cm/sec),

i = hydraulic gradient, and

A = area through which water permeates.

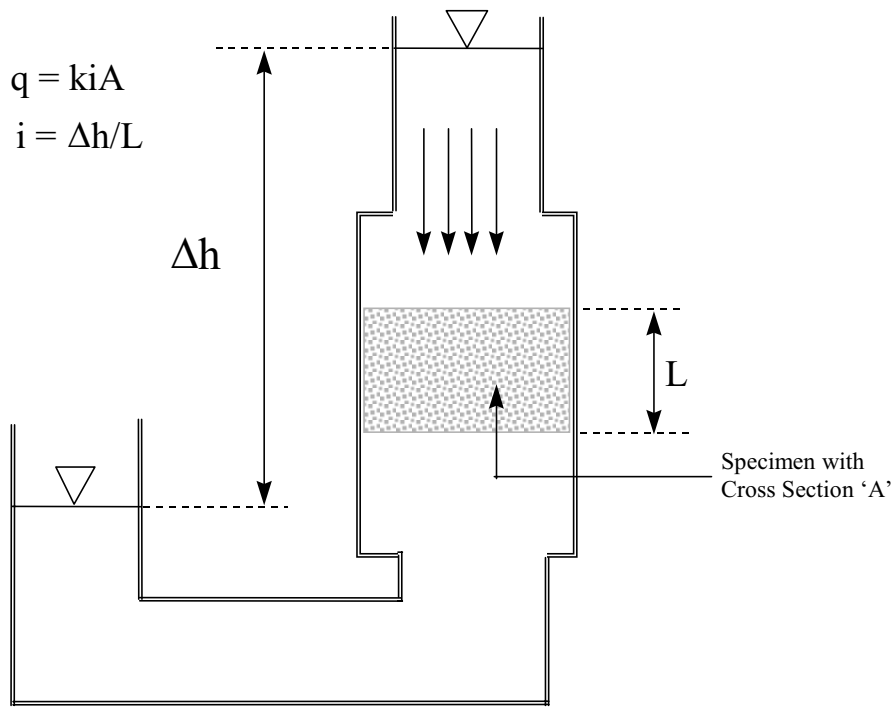

Figure 3.1. Schematic demonstrating the concept of Darcy's law

The hydraulic conductivity i is defined as $\Delta h/L$, where Δh is the difference between the water head at the top and bottom of the specimen, and L is the length of specimen through which the drop in the head takes place. The fundamental assumption in Darcy's law is that the rate of flow per unit area is proportional to the hydraulic gradient. The constant of proportionality is defined as the coefficient of permeability k. For most practical cases, one-dimensional permeability tests can be performed assuming steady laminar flow even though in reality the flow can be steady or nonsteady, continuous or transient, laminar or turbulent. The test can be performed under falling or constant head conditions.

Significance of Permeability

Permeability of compacted asphalt mixtures is important with respect to both water and air permeation. Too much air permeating through the mixture will expedite aging and hardening of the mixture, resulting in brittleness and susceptibility to cracking. Water entering the pavement as a result of high permeability can lead to premature failure of the

underlying layers through stripping and expansion under freezing conditions. The entrapped excess water can damage the mixture (especially the underlying layer) as a result of the imposed pressure from the pumping action that results from deflection under heavy loads.

It is practically impossible to create a layer of hot mix asphalt concrete (HMAC) or slurry seal with zero permeability. Even if this were possible, creating a 100 percent water barrier would be advisable only if other properties would not be sacrificed, and if water could run off the pavement surface quickly enough to prevent a surface prone to hydroplaning. Typically, a limiting value for permeability is specified. If permeability is less than a certain value, the pavement is considered sufficiently impermeable to prevent premature moisture damage.

The Purpose of Using Permeability Test for this Study

One of the most important concerns about the use of slurry seals and microsurfacing has been the permeability of these surface treatments. In some cases it is perceived that, because of high air void levels, microsurfacing has a very high permeability and results in premature moisture damage if used alone. The risk of high permeability is considered the second most important reason for not using microsurfacing by itself (the risk of reflective cracking is the primary reason). In this research project, tests were performed to evaluate this issue.

Past Experience with Pavement Permeability

There have been a series of laboratory and field tests developed for determination of permeability of asphaltic materials. One of the early studies is reported by Zube (7), who developed and utilized simple equipment for determining the relative permeability of asphalt mixtures in the field. Briefly, the test is performed by forming a small reservoir by means of a grease ring around a previously marked 150-mm circle on the pavement. The ring of grease is sealed to the surface by running the finger around the outside edge of the grease. A specific solution is fed into the area within the ring using a special graduated cylinder. The area within the ring is kept moist during a test period of 2 minutes. At the end of the 2-minute period, permeability is reported in terms of millimeters per minute for a 150-mm diameter.

It should be noted that the test does not provide a measure of the coefficient of permeability; rather, it delivers a measure of relative permeability of different pavements, since permeation takes place in radial, as well as vertical, directions. No account is made of the water head or the thickness of the layers through which the solution permeates.

Using this technique, Zube tested a series of pavements. He demonstrated that the permeability of a new pavement was significantly reduced once it was sealed with slurry (a significant reduction from an average permeability of about 100 to 500 milliliters/min to only 10 milliliters/min after slurry sealing). Based on his tests, Zube suggested that a pavement

with a permeability of less than 150 ml/min for a 150-mm diameter area will be considered capable of preventing the introduction of excess water into the pavement.

A study on the permeability of slurry seals, microsurfacing, and seal coats (8) revealed that permeability values for microsurfacing and slurry seals were in the range of 10^{-5} to 10^{-6} cm/sec. The seal coat demonstrated practically no permeability, as shown in Table 3.1. (The specimens for this study were all prepared in the laboratory.) The resulting slurry seal and microsurfacing specimens contained 8 to 12 percent voids, respectively. However, samples obtained from constructed microsurfacing in the field revealed air voids to be around 20 percent in the beginning and about 10 percent after 6 months (9).

Table 3.1. Summary of water permeability test results (after Reference 8)

Material Tested	Water Head, cm	Avg. Permeability, cm/sec
Slurry Seal	20	3.9×10^{-5}
	5	2.0×10^{-6}
Microsurfacing	20	1.1×10^{-5}
	5	1.2×10^{-6}
Seal Coat	20	0.0
	5	0.0

In another study comparing coarse matrix high binder (CMHB) and Type C mixes (10), permeability values were found to be in the range of 10^{-5} to 10^{-3} cm/sec for an air void range of 2 to 12 percent, with lower permeability values corresponding to lower air voids. Coarser CMHB mixes indicated higher permeability than Type C mixes for the same air void level. The results from these two studies indicate that microsurfacing is not more permeable than HMAC mixes. As a matter of fact, microsurfacing seems to exhibit a *lower* level of permeability. Comparing HMAC mixes with respect to permeability has shown that, as the mixture becomes coarser, permeability increases. This phenomenon may explain why microsurfacing, in spite of a higher air void level, does not cause higher permeability. This observation is probably the result of a much finer gradation for microsurfacing compared with typical HMAC mixes. Such a fine gradation results in a void structure that differs from that of typical mixtures, possibly with a smaller number of voids being interconnected.

A permeability study conducted by the Arkansas State Highway and Transportation Department on Marshall and Superpave mixes, using a falling head permeability apparatus, indicated that permeability values varied within a very wide range, from 10^{-2} cm/sec for specimens with 11 percent voids to 10^{-6} cm/sec for specimens with 4–5 percent voids. Based on this study, 10^{-4} cm/sec is considered as the break value between high and low permeability values. The categories for different levels of permeability are suggested as:

Permeability Category	Permeability Rates, cm/sec
High permeability	10^{1} to 10^{-4}
Low permeability	10^{-4} to 10^{-6}
Practically impervious	10^{-6} to 10^{-9}

The researchers suggest that pavements having densities less than 94 percent had permeability coefficients greater than 10^{-4} cm/sec. They also report higher permeability values for Superpave coarse mixes, compared with Marshall compacted fine mixes.

Similar conclusions were drawn by the Florida Department of Transportation (11). However, in that agency's studies the break value was considered to be 10^{-5} cm/sec. The tests were performed with a falling head apparatus on specimens 150 mm in diameter and 50 mm thick, with a water head of about 40 to 60 cm.

Permeability Tests from this Study

Sample Preparation: Two microsurfacing specimens were prepared in the laboratory with an application rate of about 16.1 kg/m^2. The specimens were tested along with a number of laboratory and field specimens, as shown in Table 3.2.

Table 3.2. Permeability values for specimens tested in this study

Specimen Source	Type	# of Replicates	Average Permeability, cm/sec
Laboratory	Microsurfacing	2	4.7×10^{-5}
Laboratory	HMAC	2	8.4×10^{-5}
Field Cores	HMAC + Cape seal	2	1.5×10^{-5}
Field Cores	HMAC + Old Chip Seal + Micro	2	7.5×10^{-5}

The microsurfacing specimens, with thicknesses of about 8 to 9 millimeters, had air voids of approximately 18 percent before the test and 16 percent after the test. The air voids were determined using test methods Tex 204-F (Specimen Specific Gravity) and Tex 227-F (Maximum Theoretical Specific Gravity), respectively. The laboratory-compacted HMAC specimens had air voids in the range of about 5 to 6 percent. No data were available on the air voids of the field cores.

EQUIPMENT USED

The permeability tests were performed using a permeameter cell and a water flow control panel. The equipment, very efficient for running permeability tests, includes several vacuum and pressure gauges capable of accurate application of pressure and measure of flow (Figure 3.2).

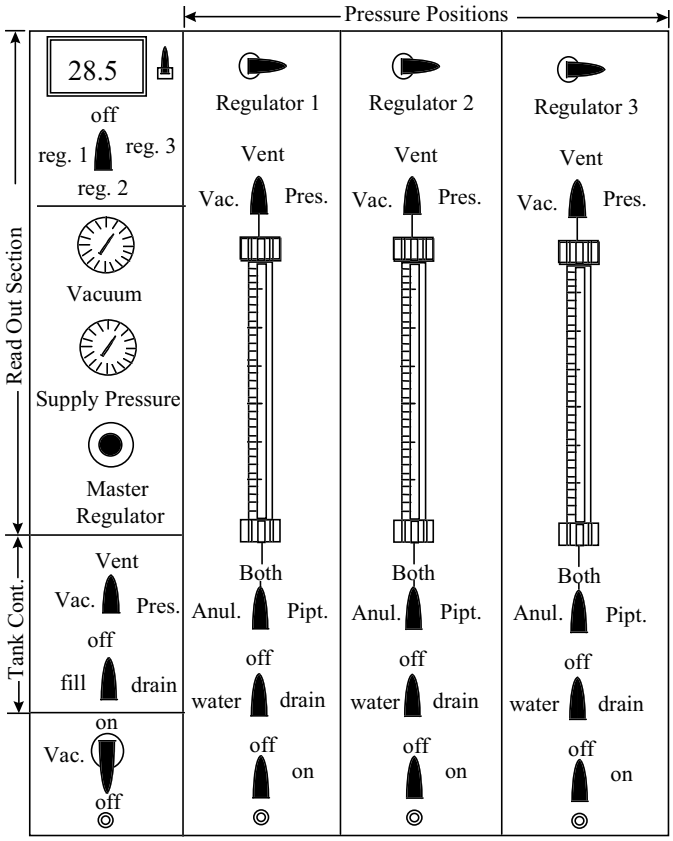

Figure 3.2. Pressure-drainage-vacuum control panel used for permeability study

The cell (Figure 3.3) is capable of performing the test under confining pressure and flexible wall permeation. Two issues are considered sensitive in this kind of test: saturation of the specimen and prevention of water flow through the sides of the specimen using good, sealed contact of the specimen sides, with the membrane acting as the flexible wall. The test can be considered a constant head permeability test if the pressure forcing the water into the specimen is high enough so that the drop in the head can be considered negligible. However,

if the test is performed under low pressure, the test may be under falling head conditions and thus, the effect of the head drop should be accounted for in calculating the permeability.

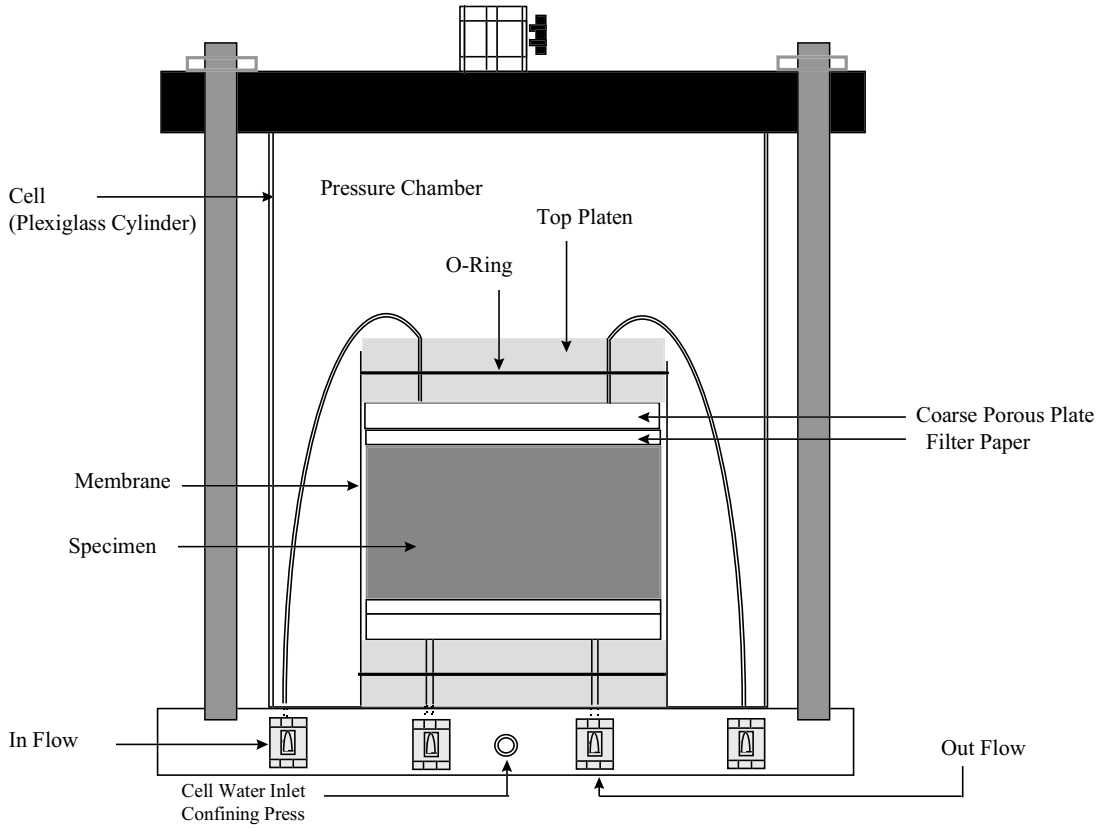

Figure 3.3. Schematic of the permeability cell used in this study

The test was conducted under different confining pressures and different inflow pressures. Detailed results from the permeability tests are provided in Appendix B. A summary of the results is presented in Table 3.2.

Discussion of Permeability Results

The results reported in Table 3.2 and in Appendix B validate the previous results reported with respect to the permeability of hot mix and microsurfacing. The results indicate that, in general, the microsurfacing specimens prepared in the laboratory, even with 16 percent voids, have permeability values less than those for laboratory-compacted HMAC

specimens with 5 percent voids. The lowest permeabilities were obtained for field cores with a layer of Cape seal.

SHEAR TESTS

Purpose of the Test for This Study

The main reason for utilizing the shear test in this study was to evaluate the bond strength between the chip seal and the underlying layer, as well as between the chip seal and the overlying microsurface. It was also used to evaluate the possibility of delamination occurring between the different layers.

Description of the Test

The testing equipment is run by a closed-loop servo hydraulic system. It is capable of applying both shear and vertical loads to the specimen through the two actuators, which can function simultaneously. Both static testing and dynamic testing are possible. Two linear variable differential transducers (LVDTs) were used to measure deformations in both vertical and horizontal directions (Figure 3.4).

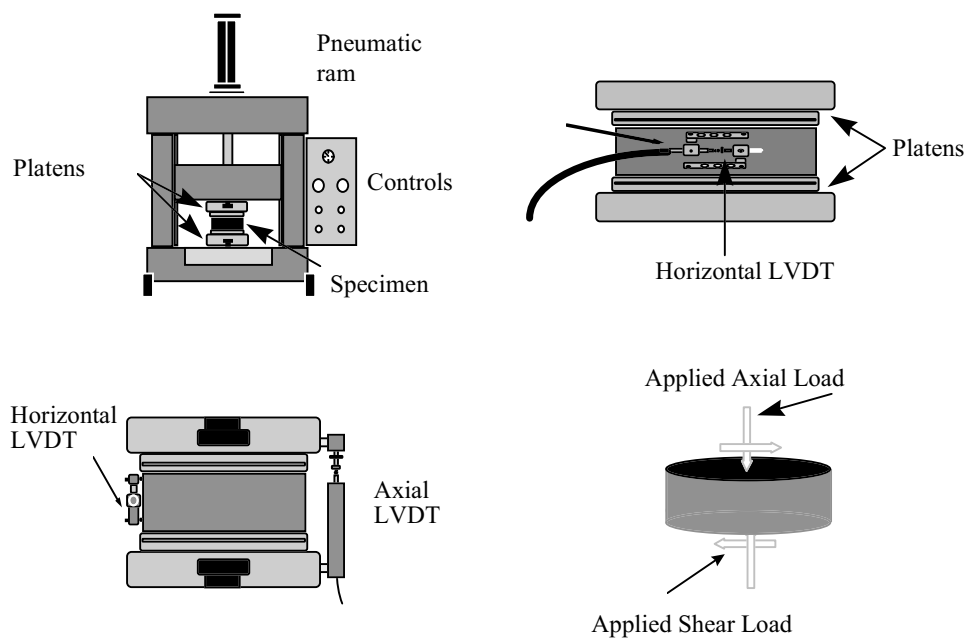

Figure 3.4. Schematics presenting specimen setup for repeated shear test

For the purpose of this study, the constant height repeated shear test was performed on the specimens in accordance with American Association of State Highway and Transportation Officials (AASHTO) TP7. However, the shear stress level and the number of cycles were reduced to suit the conditions of the specimens prepared for this study. During the test, the height of the specimen was held constant through the vertical actuator while a shear load was applied to the specimen. The shear load of 600 N (shear stress of 34 kPa) was applied for 1,000 cycles, or until the specimen failed. The tests were conducted at 58 °C, a typical high pavement temperature.

Preparation of Specimens

The five specimens shown in Table 3.3were prepared for the shear test.

Table 3.3. Specimens and the corresponding application rates

Specimen Number	Seal Coat Grade	HFRS-2P Appl. Rate, liter/m^2	Agg. Appli. Rate, kg/m^2	Microsurface Appli. Rate, kg/m
ShG4-21	4	2.22	10.4	13.4
ShG4-22	4	2.34	10.8	19.5
ShG5-21	5	1.67	6.5	13.3
ShG5-22	5	1.67	6.5	19.5
Sh_HMAC[1]	N/A[2]	N/A	N/A	N/A

1. For this specimen, only a laboratory-compacted hot mix asphalt was used.
2. N/A: Not applicable.

The chip seal/microsurfacing layers were placed on top of laboratory-compacted HMAC specimens. First, chip seal was placed on the grooved surface of the HMAC specimens, and then the microsurfacing was placed on the chip seal (Figure 3.5). The HMAC surface had been grooved to provide a rough texture.

Discussion of Test Results

Table 3.4 shows the shear deformations. The repeated shear force gradually had caused movement of the Cape seal over HMAC. The observed shear strains were in the range of 1 to 7 percent under the applied load.

After the tests, the interface between the chip seal and the HMAC, as well as the interface between the microsurfacing and the chip seal, was visually investigated. Some of the failure could be attributed to the movement of microsurfacing with respect to the chip seal. However, most of the movement occurred as a result of shoving taking place at the interface between the chip seal and the microsurfacing. The HMAC sample with no Cape seal had the least shear strain (about 1 percent), considerably less than the strain observed for the HMAC specimens covered with Cape seal.

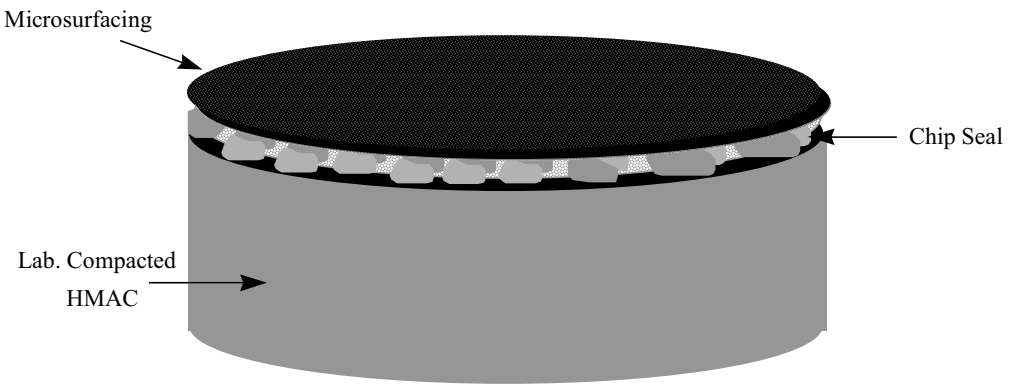

Figure 3.5. Schematic showing the laboratory construction of Cape seal over HMAC for the repeated shear test

Table 3.4. Results from the constant height repeated shear test

Specimen	Number of Cycles	Shear Deformation mm
ShG4-21	1000	3.6
ShG4-22	1000	4.2
ShG5-21	1000	1.1
ShG5-22	800	4.4
Specimen with no Cape seal	1000	1.0

For the tests performed, lower application rates of microsurfacing resulted in lower shear strains for both Grade 4 and Grade 5 chip seals.

LOADED-WHEEL TEST

Purpose of the Test for this Study

The test was used in this study to determine how bleeding and permanent deformation in the Cape seal compared with microsurfacing.

Description of the Test

The loaded-wheel test (LWT), illustrated in Figure 3.6, is intended to establish maximum limits of asphalt content in slurry and microsurfacing mixes to avoid severe flushing under heavy traffic loads. The test can also be used to determine the compaction rate and magnitude of plastic deformations in the mix. The tests for this research were performed according to the procedure outlined by the International Slurry Surfacing Association (ISSA, 12).

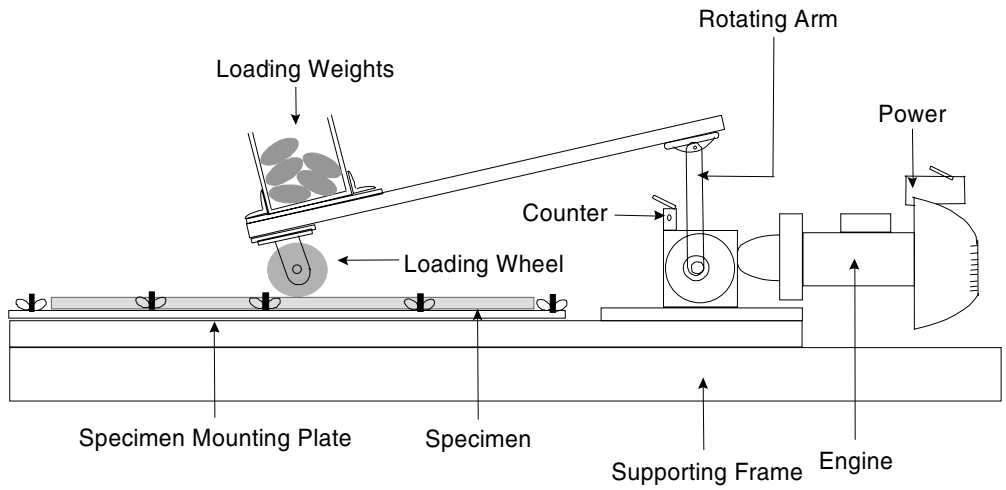

Figure 3.6. Schematic of the loaded-wheel tester used for this study

The test procedure requires briefly running the loaded wheel (about 0.6 kN) on a slab of the specimen (with dimensions of about 380 mm by 50 mm) for 1,000 cycles. Measurement can be made of the permanent deformation after completion of the cycles. After 1,000 cycles are completed, 300 grams of 82 °C hot sand is spread over the specimen and 100 cycles are run over it under load. After completion of the hundred cycles, loose sand is removed from the specimen. The gain in weight of the specimen indicates the amount of sand adhered to the specimen. The sand adhesion phase of the test is conducted to determine the severity of flushing. Adhesion of more sand implies higher flushing severity.

Sample Preparation

Five specimens were prepared for the LWT. The following table indicates the prepared specimens and the application rates.

Table 3.5. Specimens and application rates for the LWT

Specimen Number	Seal Coat Grade	HFRS-2P Appl. Rate, liter/m^2	Agg. Appli. Rate, kg/m^2	Microsurface Appli. Rate, kg/m^2
MC-00	4	0	0	20.6
MC-4/L	4	1.79	12.4	11.6
MC-4/H	5	1.79	11.6	20.6
MC-5/L	5	1.39	6.8	11.6
MC-5/H	5	1.39	7.0	20.6

Discussion of Results Obtained from the Loaded-Wheel Tests

The microsurfacing specimen (without the underlying chip seal) exhibited excellent behavior during the LWT, with no signs of bleeding or significant permanent deformation. Sand adhesion was minimal and the appearance of the specimen after the test was excellent.

The microsurfacing/chip seal specimens all failed extensively during the test. Considerable permanent deformation was also noticed. The observed significant failures were not because of weak specimens; rather, they were the result of the unsuitability of the LWT to Cape seal. The test setup seemed inappropriate for the chip seal testing. The seal coat under the microsurfacing was placed over a very smooth aluminum plate (which is the plate used for microsurfacing testing), one providing minimal friction and roughness during the test. As a result, the seal binder gradually shoved to the sides, causing failure of the specimen under repeated cycles of the load. These tests, however, demonstrate the significance of a good bond between the chip seal and the underlying layer. The test clearly indicates that even in the case of an excellent microsurface properly integrated with a well-designed chip seal, failure can occur if a good, strong bond does not exist between the chip seal and the underlying layer.

CHAPTER 4. DISCUSSION OF RESULTS AND GUIDELINES

To be sure, Cape seal has a place as a rehabilitation option; and like any other surface treatment, it requires good materials and workmanship. Selecting proper materials, crafting a high quality design, and utilizing appropriate construction techniques are the three basic components of any successful construction. The discussion and guidelines presented here are based on the following important phases of this research project:

Discussions and meetings with industry experts

- Visual inspection of existing Cape seal projects
- Laboratory study

Some of the ideas proposed in the guidelines may need to be further explored and evaluated. However, the following provides the basic and essential items that need to be considered.

Factors To Be Considered in Design

Once the proper materials are selected for the project, chip seal and microsurfacing are designed. The most important issues addressed by chip seal design include:

- Application temperature and rate for emulsion or asphalt binder
- Gradation size and application rate of aggregates
- Rolling pattern
- Required environmental and site conditions for application

The most important items determined by design of microsurfacing are:

- Gradation and amount of aggregate in the mix
- Amount of emulsion in the mix
- Amount of filler in the mix
- Amount of additive
- Amount of water to provide workability
- Required environmental and site conditions for application

In addition, the design of microsurfacing should follow test method Tex-240-F.

CONDITIONS OF EXISTING PAVEMENT

Results of the shear and loaded-wheel tests (LWTs) performed during the course of this research program, including the results of visual inspections, indicate that most of the shoving-related problems occur at the interface of the chip seal and the underlying pavement; that is, there was observed some partial separation of the microsurfacing layer and chip seal. Therefore, it is important to ensure that a relatively rough surface exists before attempts are made to place the chip seal. In case of slick and slippery surfaces (asphalt or concrete), it might be necessary to create a rough surface through a milling operation before chip seal is placed. In general, conditions of the underlying layer in terms of type and magnitude of distresses, as well as texture and affinity for binder absorption, should be considered when designing and applying the seal coat.

SELECTION OF MATERIALS

Emulsion or Binder

Within the state, both emulsions and binders have been used for construction of seal coats. Product preference is a matter of familiarity, local experience, cost, and availability, rather than of technicality. For construction of Cape seals, both emulsions and binders are acceptable for the chip seal construction. Typical emulsions and binders that have been used include CRS-2, HFRS-2, HFRS-2P, AC-10, AC-5P, AC-10P, and AC15-5TR.

Based on field observations so far, it appears that the grade of the asphalt residue both in the chip seal and in the microsurfacing plays an important role. It is recommended that the selection process include the performance characteristics of the binder residue in which the chips will be embedded. The performance characteristics should be evaluated based on the PG Superpave Grading System, considering the high and low pavement temperatures of the region where construction is to take place. Cape seal, and specifically the seal coat underlying the microsurfacing, will be strongly susceptible to bleeding and shoving if the binder is not stiff enough for the climatic and traffic conditions of the construction site. Insufficient asphalt stiffness can be attributed to at least one of the shoving/bleeding problems for Cape seal, namely, in situations where the pavement under a bridge appears to be in good shape, while the pavement exposed to the sun appears heavily shoved.

AGGREGATE SELECTION

Characteristics of the selected aggregate should meet the requirements for polish value, sand equivalency, abrasion, flakiness, soundness, and deleterious materials according to standard specifications on aggregates for surface treatments, Item 302 (13). It is recommended that clean hard rock be used and that dusty limestone be avoided so as to prevent coverage of aggregates with dust and loss of skid resistance owing to polishing. The dust prevents development of a good bond between microsurfacing and chip seal as well as between the chips and the underlying emulsion.

AGGREGATE SIZE

Grades 3, 4, and 5 are all acceptable for the chip seal construction under microsurfacing. Larger grades are recommended, however, if there is no concern about aggregate loss and windshield damage. The African practice of constructing Cape seals requires the use of 19-mm and 13-mm aggregates, the larger size being for higher traffic volumes. However, cases of good Cape seal performance with Grade 5 chip seal underscore the fact that fine-sized chips can be used with Cape seal if proper materials are selected and if construction is performed properly. Existence of a Grade 5 aggregate in the chip seal of IH-35 (north of Georgetown) covered by microsurfacing in 1992 is a good example of a high-quality job that is performing well under heavy traffic and hot climatic conditions.

As the aggregate size becomes smaller, the application rate of the binder or emulsion becomes a more sensitive issue. Also, fewer voids remain to be filled, and a small error in the application rate of binder can result in bleeding or insufficient embedment. In other words, a larger-sized aggregate allows more binder to be applied with less risk of bleeding. Aggregates of large size (Grades 4 and 5) are also better suited for areas marked by major cracks, given the need for thicker layers of binder under the chips on one hand, and the better load transfer capability of the larger aggregates on the other.

PROPER CHIP SEAL CONSTRUCTION

Expose the chip seal to traffic 2 to 7 days before the construction of microsurfacing. Careful consideration should be given to the construction of chip seal to prevent aggregate loss. An important point to consider is that if there are problems with the chip seal, they must be fixed before microsurfacing is applied. Covering chips with slurry seal does not justify leaving problems with the seal coat unresolved or inadequately addressed. In case there is aggregate loss under traffic because of rain or other factors, the seal coat should not be covered with microsurfacing. The aggregate loss problem should be fixed in a different way before application of the microsurfacing. Significant shoving and bleeding have been occurring in cases where there has been a loss of aggregate of the chip seal and the seal has been covered with the microsurfacing. Sufficient embedment and a strong bond between the seal coat aggregate and the binder is important to ensure no loss of aggregate takes place under traffic or owing to rain. This can be achieved through proper construction and through the use of an appropriate antistripping agent to ensure a strong bond between binder and aggregate.

Aggregate loss from a seal coat cannot be adequately resolved by adding aggregates to the surface. In this case, the binder in which the aggregate is to be embedded has already cooled. If emulsion is used, the necessary bond will not develop between the aggregate and the residue. In some cases, another layer of hot asphalt concrete (AC) or emulsion might be applied to the surface that has lost some of its aggregate before new chips are applied. But while this action may resolve the problem with asphalt/aggregate bond and embedment, it will create another problem: excessive asphalt causing strong susceptibility to shoving and

bleeding. The best approach is to remove the residue that has lost the aggregate and redo the job before microsurfacing.

CLIMATIC CONDITIONS

In areas where the possibility of freezing exists, Cape seal should be placed after a good period of dry weather to ensure that water will not be trapped under the seal. The presence of water under freezing conditions has the most damaging effect on the sealed pavement. Also, it should be noted that construction of Cape seal carries a great risk in wet, freezing areas where the frozen water may be confined within the body of the microsurface at the top of the chip seal as well as under the chip seal. The seal coat acts as an effective sealant and prevents water permeating into the underlying layers. This water, if frozen, can damage both the seal coat and the microsurfacing.

WHERE CAPE SEAL SHOULD BE USED

In general, seal coat, slurry seal, and microsurfacing are applied to existing pavements for the overall purpose of extending the life of the pavements. The application of these different systems depends on a large number of factors, including local experience, technical knowledge, cost, and availability of materials. Among the most important factors are the condition of the existing pavement and the expectations regarding the surface treatment. The following brief discussion covers these techniques.

Application of Seal Coat

Seal coats are typically used when deficiencies such as cracks, raveling, bleeding, and lack of skid resistance become noticeable. However, seal coats do not add to the strength or the structural capacity of the existing road. Nor do they resolve problems such as permanent deformation and shoving. Also, large cracks must be properly fixed with a crack sealant before the seal coat is applied. Seal coats indirectly preserve the structural capacity of the pavement by preventing the progress of the damage.

Application of Microsurfacing

Microsurfacing is used to address such problems as lack of skid resistance and bleeding. It is also used for rut filling. The mixture provides a smooth, skid-resistant surface. This technique is not suitable for pavements that have been severely cracked. Microsurfacing, like a seal coat, preserves the structural capacity of the existing pavement by preventing further damage.

Guidelines for the use and quality assurance of microsurfacing are extensively covered by West and Smith (14). The work of Hassan (15) also provides a good source for designing and constructing microsurfacing.

Application of Cape Seal

Seal coating is preferred to microsurfacing in cases where a very tight seal against water permeation is required or where the pavement in question has been exposed to major transverse or alligator cracks. Microsurfacing is preferred over seal coating in cases where aggregate loss is a concern and where a smooth, high skid-resistant surface with a good appearance is required. The use of microsurfacing by itself is appropriate where some water permeation will not adversely affect the pavement, and where the surface is not highly cracked. Permeability of microsurfacing to water is within the range of permeability of hot mix asphalt overlays; in this regard, it can be used where use of a hot mix asphalt concrete (HMAC) overlay is justified. Of course, it should be understood that HMAC with coarse aggregate gradation (such as Types C and B) is more permeable than HMAC with fine aggregate gradation (such as Type D). While finer gradation will provide less permeation, it may impose other problems, such as greater susceptibility to rutting.

Cape seal is a viable rehabilitation option in situations where the benefits of both seal coating and microsurfacing are sought. The chips will be sealed and firmly held in place by the microsurfacing, which will provide a smooth ride. Aggregate loss and polishing are also prevented by the sealing microsurface.

APPLICATION RATE OF MICROSURFACING

As mentioned before, it is possible to apply the microsurfacing in two ways (see Figure 4.1):

- Applying at a rate low enough to only fill the voids between the aggregates (this is possible for Grade 4 and Grade 3 chips). In this way, the slurry or microspreader box squeegees are adjusted so that the voids between the chips are filled, though no overlay is formed. This results in a nodular effect, with the tops of the stone exposed and providing a greater nonskid treatment.

- Applying at a rate to form a layer of microsurfacing at the top of the chips. In this case, it is recommended that the rate be high enough to create a thin layer of micro on the top without excessive microsurfacing.

Generally, there is no preference as to which method to use, but it is recommended that microsurfacing be applied at a rate low enough either to only fill the gaps or to just create a thin layer over the chip seal. Microsurfacing should have sufficient fluidity to fill the voids between the chips in either case. Filling the voids will cause the chip seal and microsurfacing to be well integrated and will prevent slippage of the microsurfacing over the seal coat.

The experience of the construction crew in the application of microsurfacing and proper use of squeegees can influence the quality of the final product. In cases where

permeability is a major concern, it is recommended that a pneumatic roller be used on the slurry seal to provide a less permeable surface.

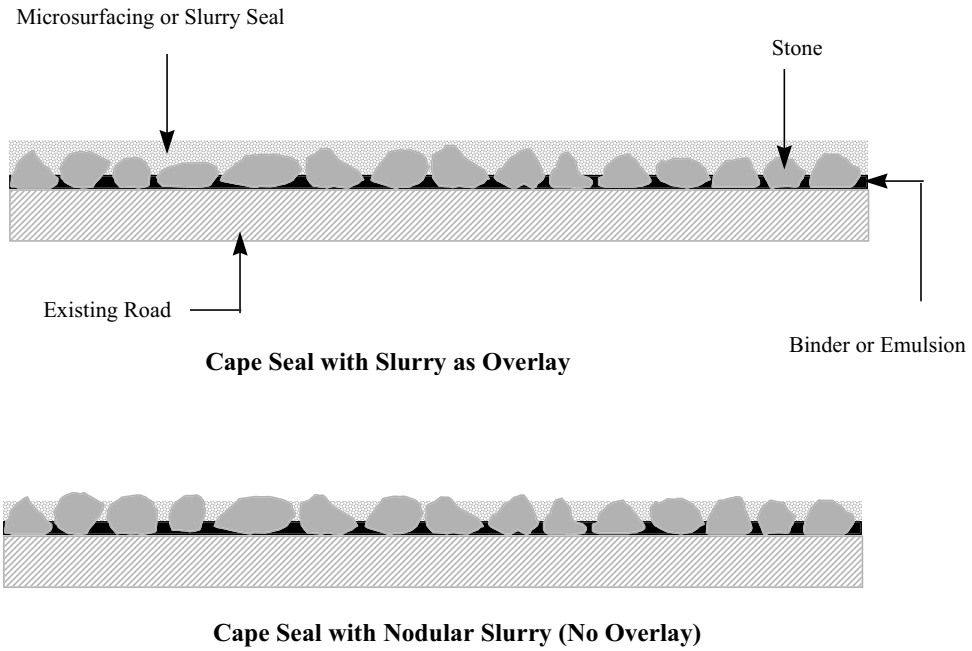

Figure 4.1. Two modes of Cape seal construction: Complete coverage of chip seal and chips exposed

COST-EFFECTIVENESS ANALYSIS

It is evident that an improved rehabilitation technique should result in the extended life of the pavement at a reasonable cost. In an economic analysis and comparison of different techniques, the overall cost of the project should be considered, i.e., the initial cost in addition to future maintenance and rehabilitation costs. The following cost-influencing items are considered in a sound cost-effectiveness analysis:

- Inflation rates
- Analysis period
- Unit cost for rehabilitation or treatment
- Estimated life of treatment

The expected pavement performance curve shown in Figure 4.2 provides the basis for conducting the cost comparison. The ordinate on the graph is a performance index, which can be determined using one of several existing approaches. One common approach is the pavement condition index (PCI), which ranges from 0 to 100, with 100 representing a new pavement in excellent condition and 0 representing a completely deteriorated pavement. Another approach is the pavement serviceability index (PSI), which ranges from 0 to 5, with 5 being the highest level of serviceability.

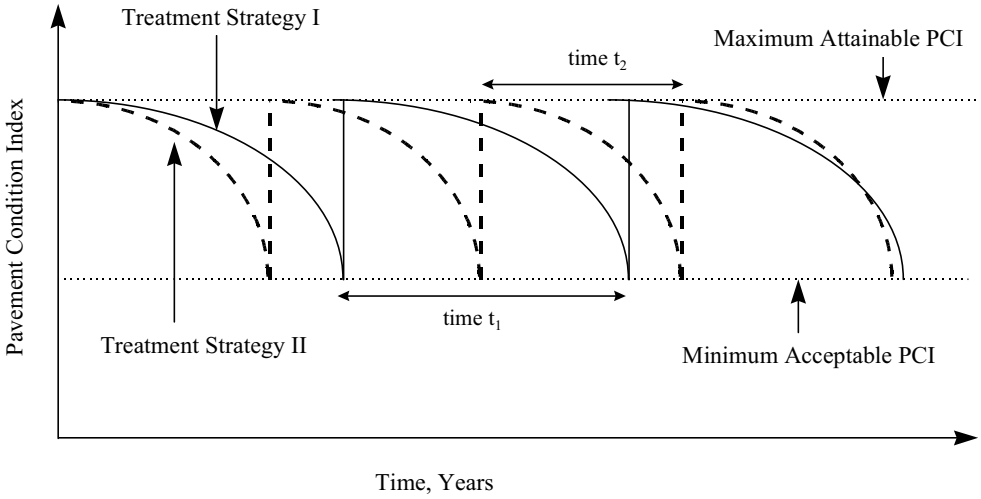

Figure 4.2. Generalized pavement performance curve for cost comparisons between two strategies

In comparing the cost of rehabilitation using Cape seal with microsurfacing or HMAC, it is assumed that the condition level achieved after rehabilitation is almost the same regardless of the strategy selected. This is not necessarily true if the condition is quantified in the form of PCI or PSI. As shown in Figure 4.2, it is assumed that the rate of deterioration (i.e., reduction in PCI) varies between different strategies. The difference in performance requires that the pavement be treated at different points in time (Figure 4.2). These different points in time are bounded by (1) the present time, and (2) the time of maximum tolerable "poor" condition. It is also assumed that the user costs during treatment are the same whether

Cape seal or HMAC is used. User costs during treatment are related to increases in travel time caused by traffic congestion or by detours.

The performance of HMAC on high-volume roads has been considerably varied, given that such performance can be affected by construction/structural/materials parameters, conditions of the existing pavement, climatic conditions, and traffic level. An average life of 7 to 8 years can be considered typical for 50-mm HMAC mixes. A good Cape seal is assumed to last about the same time. The oldest Cape seal application visited during this research project is 6 years old. The project is in good shape as of today (October 1998). However, if we assume a shorter life span for Cape seal (i.e., Strategy I representing Cape seal in Figure 4.2, and Strategy II representing HMAC), then use of this treatment is required at a higher frequency. During a certain time frame (for example, a 30-year period), with a fixed inflation rate, the construction cost for these two strategies will follow the pattern shown in Figure 4.3.

The agency construction cost for each point in time when rehabilitation is needed can be calculated as $F=P(1+i)^n$ where P is the present worth (the construction cost at the present time), i is the inflation rate, and n is the number of years from now when construction is to take place. Thus, during a 30-year time span, *present worth* of a treatment that is to take place m times will be mP. Assuming Strategy I requires m_1 times treatments with a present equivalent cost of P_1, and Strategy II requires m_2 number of constructions (i.e., time interval between treatments = t_2) and with a present equivalent cost of P_2, then the ratio of cost effectiveness of Strategy II over I will be:

Cost-effectiveness ratio of II/I = $(t_1/t_2)(P_2/P_1)$

It is not known exactly how the average service life of Cape seals constructed under Texas traffic and climatic conditions compares with that of HMAC overlays. However, based on the information obtained from some of the projects, the construction cost of the Cape seal appears to be in the range of 45 to 60 percent of HMAC, depending on the location, material, construction, and thickness of the overlay. A 50-mm HMAC overlay roughly costs about $3 per square meter. Thus, even with a service life about 60 percent of HMAC life, the Cape seal represents a cost-effective strategy. In such a comparison, however, it is assumed that user costs and regular annual maintenance costs are the same regardless of strategy used. It should also be noted that it is difficult to predict actual technical, structural, or other factors not otherwise accounted for in a life-cycle cost analysis, even though such factors will of course be important in selecting a specific strategy.

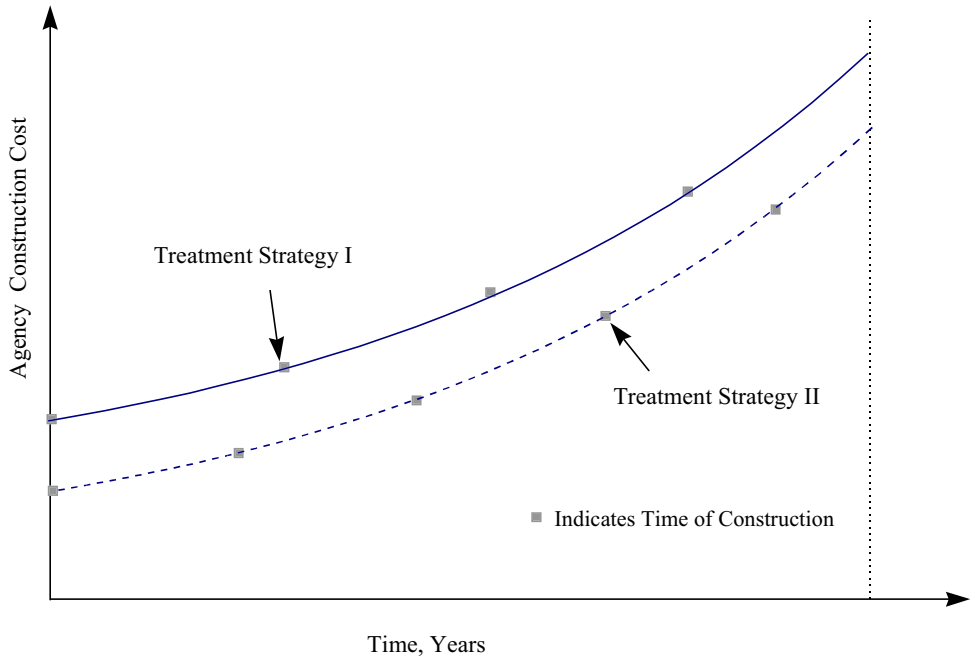

Figure 4.3. The change in construction cost with time for two different strategies assuming a fixed inflation rate and assuming equivalent user cost and annual typical maintenance cost for both strategies (note Strategy II with more construction frequency because of shorter life)

CHAPTER 5. CONCLUSIONS AND RECOMMENDATIONS

The most important conclusions and recommendations, drawn from the findings of this study, are presented below.

CONCLUSIONS

Cape seal projects were visually inspected throughout the state. Pavement distresses were identified, and excellent, as well as poor, performers were noted. Permeability, shear, and loaded-wheel tests (LWTs) were performed on Cape seals in the laboratory. The tests underscored the significance of a good bond between the chip seal and the underlying layer. The following are some of the specific conclusions drawn from the study:

1. The permeability of microsurfacing appears to be within the same range as that of hot mix asphalt concrete (HMAC), with actual measurements sometimes lower.

2. Bleeding and shoving appeared to be the most significant distresses associated with Cape seals, even though some rutting and cracking were observed for some projects.

3. During Cape seal construction, the chip seal needs to be constructed properly before microsurfacing is applied. The problems with chip seal cannot be fixed with microsurfacing.

4. The bond between the chip seal and underlying pavement must be strong enough to avoid shoving. This bond is especially important in the case of Cape seal, because of the existence of higher shear stresses.

It is recommended that two types of studies be pursued to validate or strengthen the findings of this study. First, it is suggested that a series of test sections be constructed under the same traffic and climatic conditions. For each condition, the test sections will include:

1. emulsions, AC+latex, AC15-5TR
2. different aggregate sizes
3. different times for exposure of chip seal to traffic before microsurfacing
4. different application rates for chip seal construction and microsurfacing

For the last item, application rate for the microsurfacing will be selected to create a nodular situation, as well as full coverage, of the chips. This will be an extensive study. Such

a field study will provide the basis for a good comparison and for the establishment of best criteria.

It is also suggested that the laboratory tests carried out during the course of this research program be conducted on a larger number of specimens covering a wide spectrum of emulsions, polymer-modified asphalt concretes (ACs), aggregates, and microsurfacing. The specimen mounting plate for the LWT should be replaced by a rougher plate so as to prevent severe movement of chip seal under the loading conditions of the test. It is also recommended that the LWT be conducted under temperature conditions that simulate high pavement temperatures.

The performance of seals under adverse conditions could be explored by constructing experimental laboratory seal strips and then testing these with TxDOT's model mobile load simulator (MMLS). This could be further improved quality-wise by utilizing a newly developed upgrade of the mobile load simulator (MLS), namely, the 1/3-scale model (16), dubbed the MMLS MkIII. This device has been specifically developed to test asphalt surfaces with rolling pneumatic tires under laboratory-controlled conditions using accelerated aging. In this regard, the results of tests using the MMLS for validating Superpave design parameters could serve as an excellent source of information (17).

REFERENCES

1. Zaniewski, J. P., and M. S. Mamlouk, *Preventive Maintenance Effectiveness Preventive Maintenance Treatments*, Federal Highway Administration (FHWA), Report No. FHWA-SA-96-027, February 1996.

2. Campbell, R., *Slurry Seal in New Construction*, Shell Bitumen Review No. 56, Shell International Petroleum Company, September 1977.

3. Shuler, S., *Chip Seals for High-Traffic Volume Asphalt Concrete Pavements*, Final Report, Project 14-8A, National Cooperative Highway Research Program (NCHRP), June 1996.

4. Mills, W. H., "Evaluation of Surface Treatment and Slurry Seal," *Proceedings of the Association of Asphalt Paving Technologists,* Vol. 52, 1983.

5. Telephone conversation with Chuck Payne, Virginia Transportation Institute.

6. Telephone conversation with Cliff Ashcraft, Manhole Adjusting, California.

7. Zube, E., *Compaction Studies of Asphalt Concrete Pavements as Related to the Water Permeability Test*, Highway Research Board, Bulletin 358, January 1962.

8. Button, J. W., "Permeability of Asphalt Surface Seals and their Effect on Aging of Underlying Asphalt Concrete," *Transportation Research Record 1535,* Transportation Research Board (TRB), National Research Council (NRC), Washington, D.C., 1996.

9. Andrews, E. M., R. E. Smith, C. K. Beatty, and J. W. Button, *Evaluation of Micro-surfacing Mixture Design Procedures and the Effects of Material Variation on Test Responses*, Research Project Report FHWA/TX-95/1289-1, Texas Transportation Institute, Texas A&M University System, College Station, TX, November 1994.

10. Izzo, R. P., and J. W. Button, *Permeability of Coarse Matrix-High Binder Mixtures and Its Effects on Performance*, Research Report 1238-1F, Texas Transportation Institute, Texas A&M University System, College Station, TX, April 1997.

11. Telephone conversation with Jim Musselman, Florida Department of Transportation.

12. *Test Method for Measurement of Excess Asphalt in Bituminous Mixtures by Use of a Loaded Wheel Tester and Sand Adhesion*, Technical Bulletin Number 109, International Slurry Surfacing Association (ISSA), revised version, January 1990.

13. *Standard Specifications for Construction and Maintenance of Highways, Streets, and Bridges*, Texas Department of Transportation, March 1995.

14. West, K., and R. Smith, *Microsurfacing, Guidelines for Use and Quality Assurance*, Texas Transportation Institute, Texas A&M University System, College Station, August 1996.

15. Hassan, R., *State-of-the-Practice Design, Construction, and Performance of Micro-surfacing*, FHWA Publication, No. FHWA-SA-94-051, June 1994.

16. Committee of State Road Authorities, Republic of South Africa, *Draft Revision of Technical Recommendations for Highways, TRH3,* Pretoria, South Africa, February 1996.

17. Van de Ven, M., A. F. Smit, R. Lorio, and R. McGennis, *Validation of Some Superpave Design Parameters by Wheel Testing with the Scale Model Mobile Load Simulator*, presented at the Eighth International Conference on Asphalt Pavements, Seattle, Washington, August 10–14, 1997.

APPENDIX A

DISTRESS SURVEY
OF CAPE SEAL PROJECTS

CAPE SEAL
CHIP SEAL/MICROSURFACE DATA SHEET

Project Identification

Project No.: *NH 92(42) R* District: *Atlanta* County: *Titus*
Road and Location: *US 271, southbound, from IH-30 to FM 899*
Underlying Layer: 8-10 year old 50-mm thick HMAC over cement treated flexible base
Survey Date and Time: *2/6/98, 10:30 a.m.* Traffic Level:

Construction Information

Chip Seal Information Dates of Construction: *8/9/95–8/10/95*

	Source	Type	Application Rate
Asphalt/Emulsion	Channelview	CRS-2P	1.73 liters/m^2
Aggregate	TXI	Grade 4 Lightweight	1/98 m^3/m^2

Microsurfacing Information Dates of Construction: *8/17/95–8/22/95*

	Source (Contractor)	Type	Application Rate
Microsurface	Ballou		

Distress	None	Slight	Moderate	Severe	Very Severe
Aggregate Loss	√				
Bleeding	√				
Shoving	√				
Cracking		√	√		
Rutting	√				
Disbonding	√				

Overall Cond.	Excellent	Good	Average	Bad	Very Bad
General Appearance		√			

General Remarks

The project has a generally good appearance. There are some cracks observed on the shoulders and on the inside lane (passing lane), whereas the outside lane (driving lane) appears to be in good shape. The reason is that the asphalt concrete pavement of the inside lane was badly cracked, and, consequently, it was first completely milled before construction of the Cape seal, preventing rapid reflection of the cracks. However, the cracks of the outside lane, not being as severe as those of the other lane, were simply sealed before application of Cape seal (with no milling operation).

CAPE SEAL
CHIP SEAL/MICROSURFACE DATA SHEET

Project Identification

Project No.: *IM 30-3 (91) 53* District: *Atlanta* County: *Titus*
Road and Location: *IH-30, from Franklin county line to Sulphur River*
Underlying Layer: *Twelve-year-old ACP (50 mm)*

Survey Date and Time: *2/6/98, 9:10 a.m.* Traffic Level:

Construction Information

Chip Seal Information Dates of Construction: *5/22/95–6/30/95*

	Source	Type	Application Rate
Asphalt/Emulsion		AC15-5TR	1.36 liters/m^2
Aggregate	TXI	Grade 4, Lightweight	1/109 m^3/m^2

Microsurfacing Information Dates of Construction: 7*/6/95–8/7/95*

	Source (Contractor)	Type	Application Rate
Microsurface	Ballou		16.3 Kg/m^2

Distress	None	Slight	Moderate	Severe	Very Severe
Aggregate Loss		√			
Bleeding		√			
Shoving	√		√		
Cracking			√		
Rutting		√			
Disbonding	√				

Overall Cond.	Excellent	Good	Average	Bad	Very Bad
General Appearance			√		

General Remarks
The pavement has an average appearance. Fine transverse cracks (reflective) and some aggregate loss (eastbound), some flushing, rutting, and longitudinal cracks at the edge (westbound) are noticeable.
On westbound: quarter-sized pockets of asphalt were showing up at the surface on the passing lane. These pockets are possibly indicative of migration of the binder to the surface. In time they become severely cracked and result in potholes.

CAPE SEAL
CHIP SEAL/MICROSURFACE DATA SHEET

Project Identification

Project No.: *CPM 3136-1-95* District: *Austin* County: *Travis*
Road and Location: *Loop 1, from US 183 to 35th Street*
Underlying Layer:
Survey Date and Time: *12/10/97, 10:00 a.m.* Traffic Level:

Construction Information

Chip Seal Information Date of Construction: *7/1/95–3/1/96*

	Source	Type	Application Rate
Asphalt/Emulsion		AC-10 with Latex	0.91 liters/m^2
Aggregate		Type B, Grade 5	1/179 m^3/m^2

Microsurfacing Information Date of Construction: *7/1/95–3/1/96*

	Source (Contractor)	Type	Application Rate
Microsurface			Kg/m^2

Distress	None	Slight	Moderate	Severe	Very Severe
Aggregate Loss	√				
Bleeding			√		
Shoving		√			
Cracking	√				
Rutting		√			
Disbonding					

Overall Cond.	Excellent	Good	Average	Poor	Very Poor
General Appearance			√		

General Remarks
In some areas a lot of flushing is observed on the mainlane wheelpath. No rut filling or level was performed before application of chip seal or microsurfacing. Fat joints were noticed at spots where distributor started.

CAPE SEAL
CHIP SEAL/MICROSURFACE DATA SHEET

Project Identification

Project No.:_____ District: *Austin* County: *Williamson*
Road and Location: *IH-35, Business Loop, Georgetown*
Underlying Layer:
Survey Date and Time: *1/28/98, 8 a.m..* Traffic Level:

Construction Information

Chip Seal Information Date of Construction: *1995*

	Source	Type	Application Rate
Asphalt/Emulsion		HFRS-2P	1.14 liters/m^2
Aggregate		Type B, Grade 5	1/184 m^3/m^2

Microsurfacing Information Date of Construction: *1995*

	Source (Contractor)	Type	Application Rate
Microsurface			Kg/m^2

Distress	None	Slight	Moderate	Severe	Very Severe
Aggregate Loss	√				
Bleeding			√		
Shoving	√				
Cracking			√		
Rutting		√			
Disbonding	√				

Overall Cond.	Excellent	Good	Average	Poor	Very Poor
General Appearance			√		

General Remarks
Bleeding on wheelpath was noticed in some areas. Some edge longitudinal cracks were also noticed. Rutting and major reflective cracks were noticed at the intersection (at the square in town).

CAPE SEAL
CHIP SEAL/MICROSURFACE DATA SHEET

Project Identification

Project No.: *IM 35-3 (191) 240* District: *Austin* County: *Williamson*
Road and Location: *IH-35, north of Round Rock*
Underlying Layer:
Survey Date and Time: *12/10/97, 11:30 a.m.* Traffic Level:

Construction Information

Chip Seal Information Date of Construction: *1995*

	Source	Type	Application Rate
Asphalt/Emulsion		AC-5	liters/m^2
Aggregate		Type B, Grade 5	m^3/m^2

Microsurfacing Information Date of Construction: *1995*

	Source (Contractor)	Type	Application Rate
Microsurface			Kg/m^2

Distress	None	Slight	Moderate	Severe	Very Severe
Aggregate Loss	√				
Bleeding			√		
Shoving	√				
Cracking	√				
Rutting	√				
Disbonding	√				

Overall Condition	Excellent	Good	Average	Poor	Very Poor
General Appearance		√			

General Remarks
Traffic was allowed for 3 to 7 days on the chip seal before it was covered with microsurfacing. Chip seal was performed during the day and microsurface was performed at night.

CAPE SEAL
CHIP SEAL/MICROSURFACE DATA SHEET

Project Identification

Project No.: *CPM 15-8-95* District: *Austin* County: *Williamson*
Road and Location: *IH-35, northbound, north of Georgetown*
Underlying Layer:
Survey Date and Time: *1/28/98, 8:30 a.m.* Traffic Level:

Construction Information

Chip Seal Information Date of Construction: *1992*

	Source	Type	Application Rate
Asphalt/Emulsion		HFRS-2P	1.91 liters/m^2
Aggregate		Type B, Grade 5	1/182 m^3/m^2

Microsurfacing Information Date of Construction: *1992*

	Source (Contractor)	Type	Application Rate
Microsurface			Kg/m^2

Distress	None	Slight	Moderate	Severe	Very Severe
Aggregate Loss	√				
Bleeding	√				
Shoving	√				
Cracking	√				
Rutting	√				
Disbonding	√				

Overall Condition	Excellent	Good	Average	Poor	Very Poor
General Appearance		√			

General Remarks
The surface has a very good general appearance, both on northbound and southbound lanes, with no signs of distress.

CAPE SEAL
CHIP SEAL/MICROSURFACE DATA SHEET

Project Identification

Project No.:_____ District: *Austin* County: *Bastrop*
Road and Location: *SH 21, Bastrop*
Underlying Layer:
Survey Date and Time: *1/28/98, 11:45 a.m.* Traffic Level:

Construction Information

Chip Seal Information Date of Construction: *1997*

	Source	Type	Application Rate
Asphalt/Emulsion		HFRS-2P	liters/m^2
Aggregate		Type B, Grade 5	m^3/m^2

Microsurfacing Information Date of Construction: *1997*

	Source (Contractor)	Type	Application Rate
Microsurface			Kg/m^2

Distress	None	Slight	Moderate	Severe	Very Severe
Aggregate Loss	√				
Bleeding	√				
Shoving	√				
Cracking	√				
Rutting	√				
Disbonding	√				

Overall Condition	Excellent	Good	Average	Poor	Very Poor
General Appearance		√			

General Remarks
The surface has a very good general appearance.

CAPE SEAL
CHIP SEAL/MICROSURFACE DATA SHEET

Project Identification

Project No.: *IM 35-3 (172) 204* District: *Austin* County: *Hays*
Road and Location: *IH-35, north of Blanco River to north of Loop 82*
Underlying Layer:
Survey Date and Time: *12/10/97, 9:38 a.m.* Traffic Level:

Construction Information

Chip Seal Information Dates of Construction: *5/18/94–6/23/94*

	Source	Type	Application Rate
Asphalt/Emulsion		AC-10 with Latex	1.05 liters/m^2
Aggregate		Type B, Grade 5	1/179 m^3/m^2

Microsurfacing Information Dates of Construction: *5/18/94–6/23/94*

	Source (Contractor)	Type	Application Rate
Microsurface			Kg/m^2

Distress	None	Slight	Moderate	Severe	Very Severe
Aggregate Loss	√				
Bleeding			√		
Shoving		√			
Cracking	√				
Rutting		√			
Disbonding	√				

Overall Condition	Excellent	Good	Average	Poor	Very Poor
General Appearance			√		

General Remarks
Moderate-to-severe bleeding is observed in wheelpath in some areas.

CAPE SEAL
CHIP SEAL/MICROSURFACE DATA SHEET

Project Identification

Project No.: ____ District: *Austin* County: *Hays*
Road and Location: *IH-35, north of San Marcos*
Underlying Layer:
Survey Date and Time: *12/10/97, 10:30 a.m.* Traffic Level:

Construction Information

Chip Seal Information Date of Construction: Spring 1994

	Source	Type	Application Rate
Asphalt/Emulsion		CRS-2P	1.14 liters/m^2
Aggregate		Type B, Grade 5	m^3/m^2

Microsurfacing Information Date of Construction: Spring 1994

	Source (Contractor)	Type	Application Rate
Microsurface			Kg/m^2

Distress	None	Slight	Moderate	Severe	Very Severe
Aggregate Loss	√				
Bleeding			√		
Shoving		√			
Cracking	√				
Rutting		√			
Disbonding	√				

Overall Condition	Excellent	Good	Average	Poor	Very Poor
General Appearance		√			

General Remarks
The road has a good-to-average appearance. Microsurface was placed 1 to 2 weeks after construction of chip seal.

CAPE SEAL
CHIP SEAL/MICROSURFACE DATA SHEET

Project Identification

Project No.: *IM 35-3 (191) 240* District: *Austin* County: *Hays*
Road and Location: *IH-35, north of US 183*
Underlying Layer:
Survey Date and Time: *12/10/97, 11:10 a.m.* Traffic Level:

Construction Information

Chip Seal Information Dates of Construction: 5/12/96–6/18/96

	Source	Type	Application Rate
Asphalt/Emulsion		AC-10+Latex	0.82-0.91 liters/m^2
Aggregate		Type B, Grade 5	1/184 m^3/m^2

Microsurfacing Information Dates of Construction: 5/12/96–6/18/96

	Source (Contractor)	Type	Application Rate
Microsurface			Kg/m^2

Distress	None	Slight	Moderate	Severe	Very Severe
Aggregate Loss	√				
Bleeding			√		
Shoving	√				
Cracking	√				
Rutting	√				
Disbonding	√				

Overall Condition	Excellent	Good	Average	Poor	Very Poor
General Appearance		√			

General Remarks
The road has a generally good appearance. Slight-to-moderate flushing is evident.

CAPE SEAL
CHIP SEAL/MICROSURFACE DATA SHEET

Project Identification

Project No.: *CPM 383-4-47* District: *Corpus Christi* County: *Kleberg*
Road and Location: *SH 141, Kingsville*
Underlying Layer: *6-7 year-old HMAC over Lime Stabilized Base over Lime Stabilized Subgrade*
Survey Date and Time: *Direct from District* Traffic Level: *7700 ADT (1992)*

Construction Information

Chip Seal Information Date of Construction: 6/2/94

	Source	Type	Application Rate
Asphalt/Emulsion	TFA	AC-5	1.25 liters/m^2
Aggregate		Type B, Grade 4	?

Microsurfacing Information Date of Construction: 6/2/94

	Source (Contractor)	Type	Application Rate
Microsurface	Ballou Const.	Polymer-Modified Grade 2	13.5 Kg/m^2

Distress	None	Slight	Moderate	Severe	Very Severe
Aggregate Loss					
Bleeding					
Shoving					
Cracking					
Rutting					
Disbonding					

Overall Condition	Excellent	Good	Average	Poor	Very Poor
General Appearance					

General Remarks
A level-up scratch course of microsurface was placed at a rate of 8.1 kg/m^2 before application of the main course.

CAPE SEAL
CHIP SEAL/MICROSURFACE DATA SHEET

Project Identification

Project No.: *IM 10-2 (92) 281* District: *Odessa* County: *Pecos*
Road and Location: *IH-10*
Underlying Layer:
Survey Date and Time: *Direct Report from County* Traffic Level:

Construction Information

Chip Seal Information Date of Construction: Summer *1997*

	Source	Type	Application Rate
Asphalt/Emulsion	Ergon	AC-10 with Latex	*1.18 liters/m*^{2}
Aggregate		Type B, Grade 5, Preco	1/179 m^3/m^2

Microsurfacing Information Date of Construction: Summer *1997*

	Source (Contractor)	Type	Application Rate
Microsurface	Viking Const.	Polymer-Modified. Grade 2	Kg/m^2

Distress	None	Slight	Moderate	Severe	Very Severe
Aggregate Loss					
Bleeding					
Shoving					
Cracking					
Rutting					
Disbonding					

Overall Condition	Excellent	Good	Average	Poor	Very Poor
General Appearance		√			

General Remarks
Traffic was allowed on chip seal for 1 to t2wo weeks before construction of microsurfacing. The surface is reported to have a very good appearance. After the seal coat, a scratch layer of microsurface was performed for rut filling, followed by the main course of microsurfacing.

CAPE SEAL
CHIP SEAL/MICROSURFACE DATA SHEET

Project Identification

Project No.: *CPM 200-3-34* District: *Paris* County: *Rains*
Road and Location: *US 69, from Hunt County line (270+00) to FM 2795 (278+0.458)*
Underlying Layer: *Two Courses of Surf. Treat., 150 mm Cement Sta. Flex. Base, 150 mm Flex Base.*
Survey Date and Time: *Direct Report from County* Traffic Level: *3700 ADT*

Construction Information

Chip Seal Information Date of Construction: Summer *1996*

	Source	Type	Application Rate
Asphalt/Emulsion	Ergon	CRS-2P	1.14 liters/m^2
Aggregate		Type B, Grade 5	1/125 m^3/m^2

Microsurfacing Information Date of Construction: Summer *1996*

	Source (Contractor)	Type	Application Rate
Microsurface	Viking Const.	Poly Mod. Gr 2	15.2 Kg/m^2

Distress	None	Slight	Moderate	Severe	Very Severe
Aggregate Loss					
Bleeding					
Shoving					
Cracking					
Rutting					
Disbonding					

Overall Condition	Excellent	Good	Average	Poor	Very Poor
General Appearance		√			

General Remarks:
Before construction of Cape seal, rut-filling of the badly rutted pavement was performed using microsurfacing. Traffic was allowed on chip seal for approximately 30 days before construction of microsurfacing. There was also a time interval of about 30 days between construction of rut-filling microsurface and the chip seal. The surface has a very good appearance.

CAPE SEAL
CHIP SEAL/MICROSURFACE DATA SHEET

Project Identification

Project No.: *STP 96 (182)R* District: *Tyler* County: *Henderson*
Road and Location: *SH 19 from FM 59 to US 175, Athens*
Underlying Layer: Chip seal built around 1990.
Survey Date and Time: *2/6/98, 12:20 p.m.* Traffic Level:

Construction Information

Chip Seal Information Date of Construction: *1990*

	Source	Type	Application Rate
Asphalt/Emulsion		AC-10	1 liters/m^2
Aggregate		Type B, Grade 5	1/136 m^3/m^2

Microsurfacing Information Date of Construction: Summer *1990*

	Source (Contractor)	Type	Application Rate
Microsurface			13 Kg/m^2

Distress	None	Slight	Moderate	Severe	Very Severe
Aggregate Loss	√				
Bleeding	√				
Shoving	√				
Cracking			√		
Rutting	√				
Disbonding	√				

Overall Condition	Excellent	Good	Average	Poor	Very Poor
General Appearance		√			

General Remarks:
This is not a typical Cape seal. The microsurfacing was placed over a chip seal, which at the time was 5 years old. Transverse reflective cracks observed at 4-meter intervals.

CAPE SEAL
CHIP SEAL/MICROSURFACE DATA SHEET

Project Identification

Project No.: *IM 20-6(74)572* District: *Tyler* County: *Smith*
Road and Location: *IH-20 West, from US 271 to Gregg County line*
Underlying Layer: *81-88 mm ACP over 200 mm of RCP over 150 mm of Cement Stabilized Base*
Survey Date and Time: *2/6/98, 3:30 p.m..* Traffic Level:

Construction Information

Chip Seal Information Date of Construction: *1990*

	Source	Type	Application Rate
Asphalt/Emulsion		AC-10	0.9 liters/m^2
Aggregate		Type B, Grade 5	1/150 m^3/m^2

Microsurfacing Information Date of Construction: Summer 1995

	Source (Contractor)	Type	Application Rate
Microsurface			13 Kg/m^2

Distress	None	Slight	Moderate	Severe	Very Severe
Aggregate Loss	√				
Bleeding		√			
Shoving	√				
Cracking	√				
Rutting		√			
Disbonding	√				

Overall Condition	Excellent	Good	Average	Poor	Very Poor
General Appearance			√		

General Remarks
No cracks or aggregate loss is observed. Spots of flushing on outside lane (driving lane) are noticed, possibly an indication of binder migrating from the bottom to the top.

CAPE SEAL
CHIP SEAL/MICROSURFACE DATA SHEET

Project Identification

Project No.:_____ District: *Tyler* County: *Smith*
Road and Location: *SH 155, from IH-20 to Upshur County line*
Underlying Layer:
Survey Date and Time: *2/6/98, 3:10 p.m.* Traffic Level:

Construction Information

Chip Seal Information Date of Construction: *May 1990*

	Source	Type	Application Rate
Asphalt/Emulsion			liters/m^2
Aggregate			m^3/m^2

Microsurfacing Information Date of Construction: *Summer 1995*

	Source (Contractor)	Type	Application Rate
Microsurface			13 Kg/m^2

Distress	None	Slight	Moderate	Severe	Very Severe
Aggregate Loss	√				
Bleeding	√				
Shoving	√				
Cracking	√				
Rutting	√				
Disbonding	√				

Overall Condition	Excellent	Good	Average	Poor	Very Poor
General Appearance	√				

General Remarks
This is not a typical Cape seal. The microsurfacing was placed over a 2-year old chip seal. The surface looks very good. No signs of any kind of problem exist. **11/26/97**
Lenny,

I had the opportunity to drive up to Fort Worth and take a look at the US 287 seal coat/microsurface project with Richard Williammee and some other good people. At this point, it appears that there are more than just one factor contributing to the severe distresses observed on this road. I put my preliminary thoughts together as a simple report, which is attached to this memo. We will know more once some questions are answered on this project. I believe designing microsurface is influenced by the type and condition of the seal coat used; and microsurface needs adjustment depending on the type and condition of the chip seal. Of course, for this particular project that we visited yesterday, as of now it appears that factors other than incompatibility of seal coat and microsurface have contributed to the problem. Anyway, this is a brief preliminary report I put together for your information.
Mansour

CAPE SEAL PROJECT 1788

SITE VISIT REPORT

DATE: November 25, 1997

LOCATION: Highway US 287, close to Rhome & Highway 114, Wise County, Fort Worth District

ATTENDEES:

Mark Schluter, Area Engineer, Forth Worth District
Mansour Solaimanian, Research Engineer, The University of Texas at Austin
James Wier, General Superintendent, Viking Construction, Inc., Austin
Richard Williammee, District Materials Engineer, Fort Worth District
Andrew Wimsat, District Pavement Engineer, Fort Worth District

PROJECT DESCRIPTION:

Highway US 281, stretching from southeast of the state all the way through the northwest, is a four-lane highway (two lanes on each side) between Dallas/Fort Worth and Wichita Falls.
The seal coat/microsurface is built over an old concrete pavement. The surface of this pavement is very slick and has been patched in some areas. In some portions of the road where seal coat/microsurface was to be built (owing to extreme slickness), the surface of the old concrete pavement was milled to give it a rough surface before applying the seal coat/microsurface.
The seal coat on the north bound was constructed within a 2-day time frame (May 5 and 6, 1997). Microsurfacing on northbound was started on May 8. So, there was a 2-day and a 3-day time delay between completion of seal coat and start of microsurface.
There was no work performed on May 9 (rain) through May 11. Microsurfacing on northbound was continued and completed on May 12.
The seal coat on the southbound (right lane) was initiated on May 7. It was continued and completed on May 8. No work was done on May 9 through May 11. No seal coat was constructed on May 12. The seal coat on southbound (left lane) was started and completed on May 13. Microsurfacing on southbound (right lane) started on May 12 (4-day time delay). Microsurface on southbound (left lane) started on May 14 and was completed on the same day (1-day time interval between the finish of seal coat and start of the microsurface). Microsurface on southbound right lane was continued on May 15 and completed on this day. On this day there was an interruption of work because of showers around 8:30 a.m.
Based on the information available on the dates of construction, it appears that the time interval between the completion of the seal coat and start of the microsurface for different locations varies between 1 to 4 days. It is not clear if this variation has played any role in the distresses observed. However, it is very important to ensure that the seal coat emulsion has set and has cured completely before application of the microsurface. It is important to determine the time period for complete curing of the emulsion.
James Wier (Viking Construction) was telling me that he thinks part of the problem comes from the fact that after the rain, there was considerable aggregate loss under traffic, and therefore microsurface was laid on top of a seal coat with insufficient aggregate.

MATERIALS

For the Chip Seal

Asphalt Emulsion CRS-2, Kock Asphalt, Saginaw, TX
Aggregate TY B GR 4, Texas Industries, Chico, TX

For the Microsurface

Asphalt Emulsion CSS-1P Ergon Refining, Waco, TX
Aggregate Smith Crushed Stone Inc., Tehuacana, TX

Seal Coat Rate of Application

Aggregate 1 M3/115 M2
Asphalt 1.86 Liters/M2 (0.4 gallons/yd2)

GENERAL OBSERVATIONS

Northbound, Right Lane (Driving Lane)

Severe bleeding and flushing, especially under the wheel path

Severe shoving to the sides noticed

Movement and sliding of the seal coat/microsurfacing over the concrete base noticeable

Loss of the seal coat and microsurfacing at several spots so that the concrete base is completely exposed at those spots

Northbound, Left lane (Passing Lane)

Slight bleeding and flushing

Moderate shoving to the sides noticed

Loss of the seal coat and microsurfacing at several spots so that the concrete base is completely exposed at those spots

Southbound, both Right and Left Lanes

Severe bleeding and flushing, especially under the wheel path

Severe shoving to the sides noticed

Movement and sliding of the seal coat/microsurfacing over the concrete base noticeable

Loss of the seal coat and microsurfacing at several spots so that the concrete base is completely exposed at those spots

Conditions under the Bridges

The constructed seal coat/microsurfacing at those sections of the lanes that happen to be passing under the bridge do not exhibit signs of distresses described above.

Shoulders

The seal coat covering the shoulders looked in good condition.

Possible Reasons for Observed Distresses

There has been a very weak bond between the seal coat and the underlying very slick, old concrete pavement. This weak bond has contributed to sliding and shoving of the seal coat/microsurface structure.

Emulsion for the seal coat shot too rich (0.4 gallons/yd^2) for the existing base (old concrete), not allowing any absorption or penetration of the binder down into the old pavement. This could have contributed to movement of the binder up to the surface under traffic and hot temperatures leading to bleeding and flushing.

Time Distresses Were Noticed

Based on Mr. Mark Schluter's comments, the first signs of distress were observed about a week after construction. This was during some very hot days of May.

IMPORTANT NOTES

NOTE 1. The fact that the seal coat/microsurface under the bridges appears in sound condition and in exposed areas it is highly distressed is an indication of the important effect of the climatic conditions. The pavement under the bridge is not exposed to the afternoon sun radiation at the time of extremely high temperatures. Therefore, it does not get as hot as the pavement in the exposed section. The asphalt on the extremely hot exposed section of the pavement has a lower viscosity and is more susceptible to flow, as compared with the section covered by the bridge. For this reason, bleeding and shoving are severe for unexposed areas and practically very slight under the bridge. This implies that a harder asphalt might have better resisted shoving and bleeding under hot conditions of this region. The other factor, possibly of less importance, is that the section under the bridge is not exposed to water to the degree that the exposed area is. This might have contributed to more susceptibility of the exposed section to aggregate loss, and, eventually, to a high susceptibility to bleeding.

NOTE 2. The seal coat/microsurface, which was constructed on the milled rough concrete section, is by far less distressed with flushing and shoving compared with seal coat/microsurface constructed on the unmilled slick smooth surface of the concrete pavement. This is an indication of the fact that the slick surface has contributed to the shoving-bleeding phenomenon.

NOTE 3. The seal coat on the shoulders was built on an old asphalt concrete pavement and looked to be in good shape. Shoulders have not been exposed to the heavy traffic as the through lanes have been; in addition, they were built on asphalt concrete rather than on smooth cement concrete pavement, which was the case for the through lanes. These two reasons have contributed to the good shape of the seal coat on shoulders, compared to what is observed on through lanes.

CAPE SEAL
CHIP SEAL/MICROSURFACE DATA SHEET

Project Identification

Project No.: *NH 92(42) R* District: *Waco* County: *McLennan*
Road and Location: *SH 6 from Bosque County line to 1.3 miles east of FM 185*
Underlying Layer: *Moderately oxidized HMAC with stripped aggregates at 3-inch depth*
Survey Date and Time: *Direct Report from District* Traffic Level: *8300-4800 (1996)*

Construction Information

Chip Seal Information Date of Construction: *May 1993*

	Source	Type	Application Rate
Asphalt/Emulsion	Star Enterprises	AC with Latex	1.91 liters/m^2
Aggregate	Brazos Point	Type B Grade 3	1/103 m^3/m^2

Microsurfacing Information Date of Construction: June *1993*

	Source (Contractor)	Type	Application Rate
Microsurface	Delta Mat'l, Brownlee	Grade 2	14.9 Kg/m^2

Distress	None	Slight	Moderate	Severe	Very Severe
Aggregate Loss		√			
Bleeding				√	
Shoving			√		
Cracking		√	√		
Rutting			√		
Disbonding			√		

Overall Cond.	Excellent	Good	Average	Bad	Very Bad
General Appearance				√	

General Remarks
Roadway had received microsurfacing level-up in wheelpath during October and November of 1992. Seal was shot poorly and at varying rates. Flushing and bleeding occurred soon after construction. Seal asphalt migrated to the surface.

CAPE SEAL
CHIP SEAL/MICROSURFACE DATA SHEET

Project Identification

Project No.: *IM 35-4(183) 278* District: *Waco* County: *Bell*
Road and Location: *IH-35, from Williamson County line to Loop 121 south of Belton*
Underlying Layer: *an old microsurfacing (1988) placed over HMAC*
Survey Date and Time: *Direct Report from District* Traffic Level: *37,000 (1996)*

Construction Information

Chip Seal Information Date of Construction: *May 1993*

	Source	Type	Application Rate
Asphalt/Emulsion		HFRS-2P	liters/m^2
Aggregate		Type B Grade 5	m^3/m^2

Microsurfacing Information Date of Construction: *June 1993*

	Source (Contractor)	Type	Application Rate
Microsurface			Kg/m^2

Distress	None	Slight	Moderate	Severe	Very Severe
Aggregate Loss					√
Bleeding			√		
Shoving				√	
Cracking					√
Rutting				√	
Disbonding			√		

Overall Cond.	Excellent	Good	Average	Poor	Very Poor
General Appearance					√

General Remarks

The project failed within 1 year of placement and was milled off. Basic cause of failure is attributed to debonding of 1988 microsurfacing from underlying hot mix asphalt concrete (HMAC) owing to entrapped water and hard freeze of January 1996.

APPENDIX B

RESULTS OF LABORATORY STUDY:

GRADATIONS

PERMEABILITY TESTS

SHEAR TESTS

LOADED-WHEEL TESTS

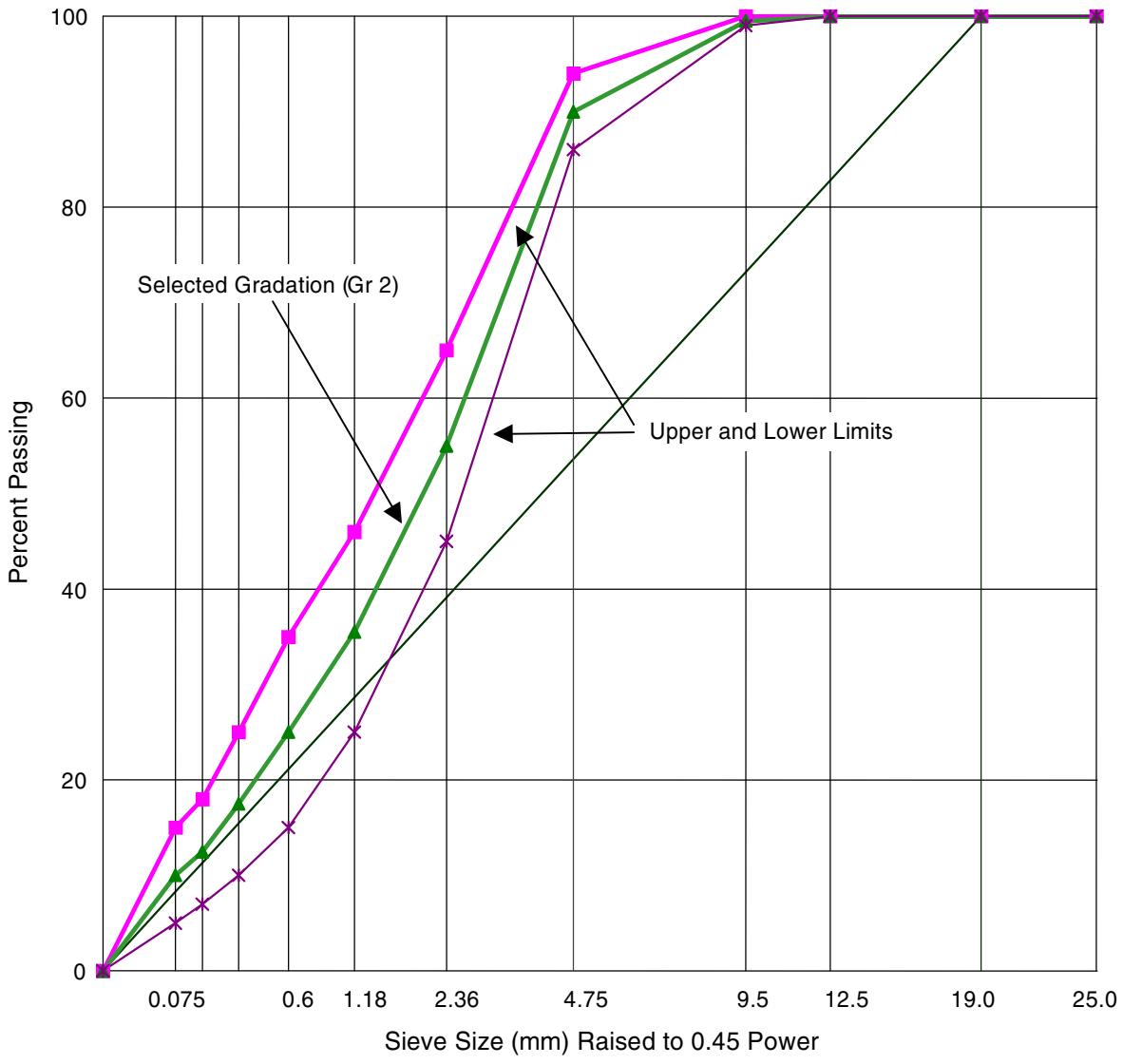

Figure B.1. Gradation selected for preparation of microsurfacing specimens

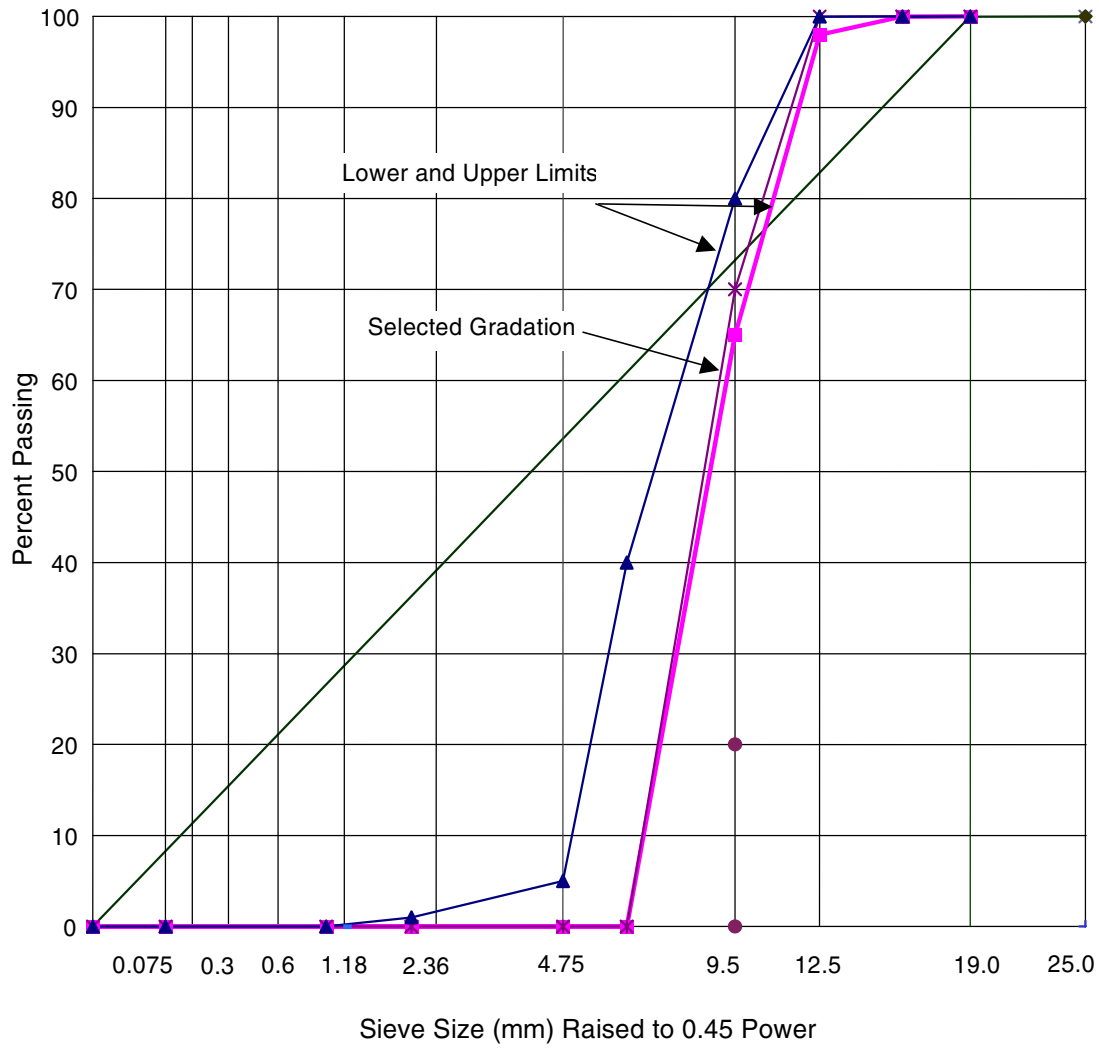

Figure B.2. Gradation selected for preparing Grade 4 chip seal specimens (gradation is selected at the coarse side considering the limits)

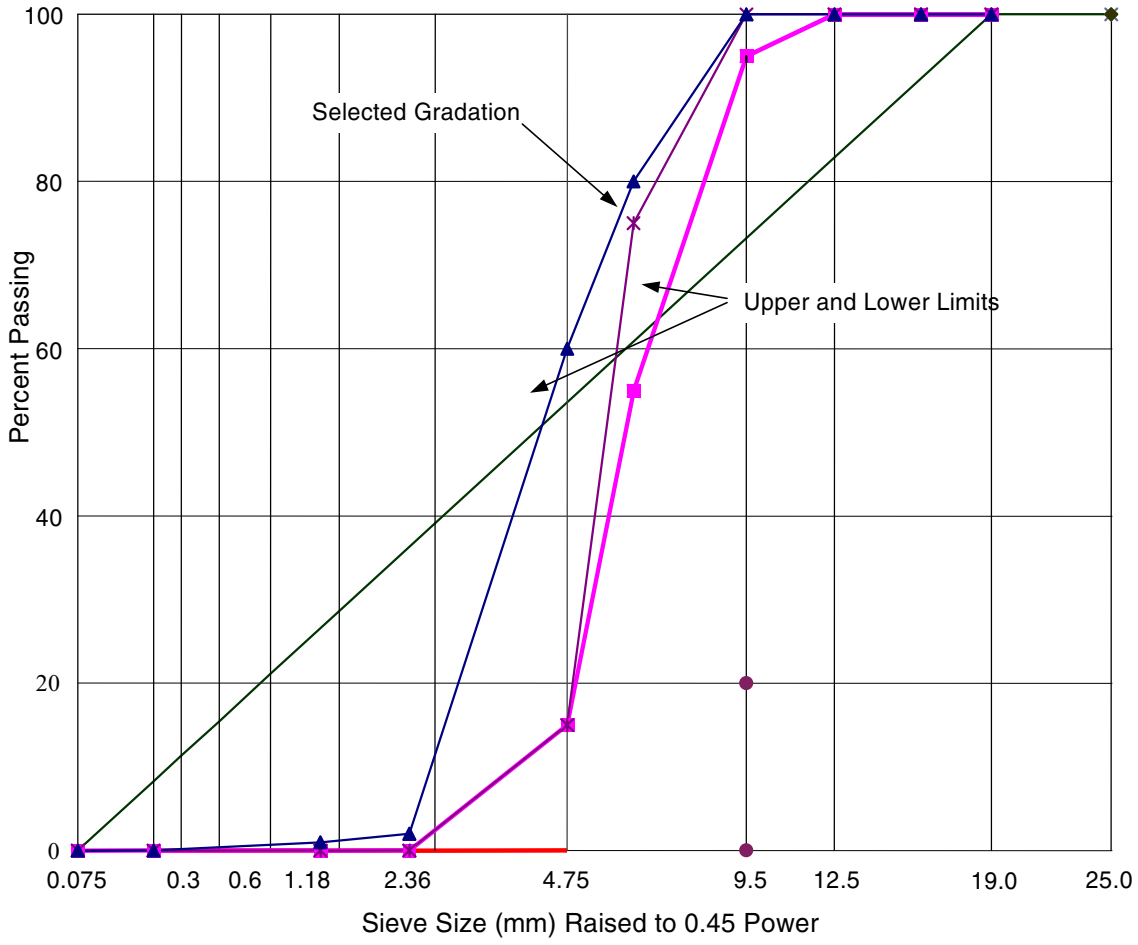

Figure B.3. Gradation selected for preparing Grade 5 chip seal specimens

PERMEABILITY TESTS
CAPE SEAL PROJECT

Symbols & Devices Used:	p (pipette), a (annulus), b (both pipette and annulus)					
Correction Factor	for 'p'	1	for 'a'	3.45	for 'b'	4.45

Test Dates	7/22/98
	7/24/98

	Thick-ness cm	Diam. cm	Area cm2	Conf. Press. psi	Top Press. psi	Bott. Press psi	Flow In Read 1	Flow In Read 2	Flow Out Read 1	Flow Out Read 2	Device	Flow Time sec	Flow Sum	Avg. Flow cc	Flow Rate,Q cc/sec	h cm	k cm/sec
Micro-	0.85	10	78.5	17.0	10.0	4.0	1.2	19.2	23.0	5.0	p	14	18.0	18.0	1.3	422.5	3.3E-05
Surf.	0.85	10	78.5	17.0	2.7	0.8	2.1	23.0	22.5	1.0	b	269	21.2	94.3	0.4	133.8	2.9E-05
Spec.	0.85	10	78.5	17.0	6.0	1.1	2.4	23.5	22.2	0.9	b	87	21.2	94.3	1.1	345.1	3.4E-05
	0.85	10	78.5	17.0	3.8	0.8	0.6	23.3	23.5	0.4	b	189	22.9	101.9	0.5	211.3	2.8E-05
# 1	0.85	10	78.5	17.0	1.1	0.6	0.2	20.6	24.0	3.2	b	570	20.6	91.7	0.2	35.2	5.7E-05
	0.85	10	78.5	17.0	10.0	1.4	3.8	23.7	22.6	2.3	b	52	20.1	89.4	1.7	605.6	3.1E-05
	0.85	10	78.5	5.1	2.0	1.3	1.6	21.3	23.2	3.1	b	500	19.9	88.6	0.2	49.3	4.2E-05
	0.85	10	78.5	5.1	2.0	1.3	0.7	23.2	23.5	0.6	p	140	22.7	22.7	0.2	49.3	4.2E-05
															AVERAGE		**3.7E-05**
	0.85	10	78.5	6	1.3	0.8	2	24.5	23.5	0.7	p	90	22.7	22.7	0.3	35.2	1.2E-04
Micro-	0.85	10	78.5	9	1.3	0.7	0.6	22.6	23.3	1.1	p	80	22.1	22.1	0.3	42.3	8.6E-05
Surf.	0.85	10	78.5	17	1.7	0.6	0.3	23.6	24.3	0.8	p	70	23.4	23.4	0.3	77.5	4.9E-05
Spec.	0.85	10	78.5	17	6	1.1	1.5	23.9	23.2	0.4	p	19	22.6	22.6	1.2	345.1	3.8E-05
	0.85	10	78.5	17	6	1.1	3	24.4	24	2.2	b	83	21.6	96.1	1.2	345.1	3.6E-05
# 2	0.85	10	78.5	17	6	0	3	24.9	24	1.7	b	84	22.1	98.3	1.2	422.5	3.0E-05
	0.85	10	78.5	17	1.7	0.6	0.8	23.9	24.3	0.9	p	85	23.3	23.3	0.3	77.5	4.1E-05
															AVERAGE		**5.7E-05**
Lab.	4.76	10	78.5	3.2	1.3	0.8	1.5	23	24	2.1	p	315	21.7	21.7	0.1	35.2	1.6E-04
Made	4.76	10	78.5	6	1.3	0.8	1	23.1	23.8	1.3	p	345	22.3	22.3	0.1	35.2	1.5E-04
HMAC	4.76	10	78.5	17	1.3	0.8	0	20.5	23.8	2.9	p	425	20.7	20.7	0.0	35.2	9.7E-05
Specin	4.76	10	78.5	17	6	1.1	0.5	24.4	23.9	0	p	70	23.9	23.9	0.3	345.1	6.0E-05
7-B v2	4.76	10	78.5	30	10	1	1.9	26	24	0	p	50	24.1	24.1	0.5	633.8	4.6E-05
	4.76	10	78.5	30	10	1	1	23.5	23.8	1.5	p	45	22.4	22.4	0.5	633.8	4.8E-05

PERMEABILITY TESTS
CAPE SEAL PROJECT

Symbols & Devices Used:	p (pipette), a (annulus), b (both pipette and annulus)																		
Correction Factor			for 'p'	1		for 'a'	3.45		for 'b'	4.45									
Test Dates																			7/22/98
																			7/24/98
Lab.	4.76	10	78.5	3.2	1.3	0.8	2.1	21.2	21.5	2.3	p	410	19.2	19.2	0.0	35.2	1.0E-04
Made	4.76	10	78.5	3.2	1.3	0.8	1.2	21.4	23.5	3	p	440	20.4	20.4	0.0	35.2	9.6E-05
HMAC	4.76	10	78.5	3.2	1.3	0.8	22.5	23.5	1.9	1	p	390	1.0	1.0	0.0	35.2	1.1E-05
Specim	4.76	10	78.5	6	1.3	0.8	1	8	22.9	15.7	p	88	7.1	7.1	0.1	35.2	9.9E-05
7-B v1	4.76	10	78.5	6	1.3	0.8	1	11	22.9	12.7	p	138	10.1	10.1	0.1	35.2	9.7E-05
	4.76	10	78.5	6	1.3	0.8	1	14	22.9	9.7	p	203	13.1	13.1	0.1	35.2	9.5E-05
	4.76	10	78.5	6	1.3	0.8	1	16	22.9	7.6	p	260	15.2	15.2	0.1	35.2	9.2E-05
	4.76	10	78.5	6	1.3	0.8	1	18	22.9	5.6	p	338	17.2	17.2	0.1	35.2	8.8E-05
	4.76	10	78.5	6	1.3	0.8	1	20	22.9	3.6	p	460	19.2	19.2	0.0	35.2	8.1E-05
	4.76	10	78.5	6	1.3	0.8	1	21.5	22.9	2.1	p	635	20.7	20.7	0.0	35.2	7.0E-05
	4.76	10	78.5	17	6	1.1	2.5	23.1	22.5	1.6	p	50	20.8	20.8	0.4	345.1	7.3E-05
	4.76	10	78.5	30	10	1	1	23.7	23	0.1	p	46	22.8	22.8	0.5	633.8	4.8E-05
	4.76	10	78.5	30	8	2	0.1	23.1	23.8	0.5	p	73	23.2	23.2	0.3	422.5	4.6E-05
	4.76	10	78.5	30	8	2	4.2	22.8	19	0	p	64	18.8	18.8	0.3	422.5	4.3E-05
																AVERAGE	**7.4E-05**
Field	5.3	10	78.5	8.0	4.2	1.3	2.3	23.9	6.0	21.5	p	85	3.1	3.1	0.0	204.2	1.2E-05
Core	5.3	10	78.5	8.0	4.2	1.3	2.3	23.9	7.5	19.9	p	150	4.6	4.6	0.0	204.2	1.0E-05
	5.3	10	78.5	8.0	4.2	1.3	2.3	23.9	10.5	17.0	p	286	7.6	7.6	0.0	204.2	8.7E-06
from	5.3	10	78.5	8.0	4.2	1.3	2.3	23.9	14.5	13.1	p	485	11.5	11.5	0.0	204.2	7.8E-06
	5.3	10	78.5	8.0	4.2	1.3	2.3	23.9	16.0	11.7	p	278	13.0	13.0	0.0	204.2	1.5E-05
US181	5.3	10	78.5	8.0	4.2	1.3	10.5	17.0	16.0	11.7	p	260	5.4	5.4	0.0	204.2	6.9E-06
	5.3	10	78.5	15.0	10.0	2.0	3.0	21.5	4.5	20.0	p	24	1.5	1.5	0.1	563.4	7.5E-06
Sp. # 1	5.3	10	78.5	15.0	10.0	2.0	3.0	21.5	6.0	19.0	p	56	2.8	2.8	0.0	563.4	5.9E-06
	5.3	10	78.5	15.0	10.0	2.0	3.0	21.5	8.5	16.6	p	110	5.2	5.2	0.0	563.4	5.7E-06
HMAC	5.3	10	78.5	15.0	10.0	2.0	3.0	21.5	12.5	12.7	p	202	9.2	9.2	0.0	563.4	5.4E-06
+	5.3	10	78.5	15.0	10.0	2.0	3.0	21.5	17.0	8.4	p	309	13.6	13.6	0.0	563.4	5.3E-06
Chip	5.3	10	78.5	15.0	10.0	2.0	0.1	23.1	20.0	5.3	p	385	18.9	18.9	0.0	563.4	5.9E-06
Seal	5.3	10	78.5	15.0	10.0	2.0	12.5	12.7	20.0	5.3	p	183	7.5	7.5	0.0	563.4	4.9E-06
+	5.3	10	78.5	30.0	10.0	2.0	2.0	21.8	3.0	20.7	p	213	1.1	1.1	0.0	563.4	5.9E-07
Micro-	5.3	10	78.5	30.0	8.0	2.0	2.0	21.8	4.0	19.5	p	474	2.2	2.2	0.0	422.5	7.3E-07
	5.3	10	78.5	30.0	8.0	2.0	2.0	21.8	4.5	19.0	p	615	2.7	2.7	0.0	422.5	6.9E-07
	5.3	10	78.5	20.0	10.0	2.0	6.0	18.0	7.0	17.0	p	84	1.0	1.0	0.0	563.4	1.4E-06
	5.3	10	78.5	20.0	10.0	2.0	6.0	18.0	10.0	14.0	p	356	4.0	4.0	0.0	563.4	1.3E-06
																AVERAGE	**5.9E-06**

PERMEABILITY TESTS
CAPE SEAL PROJECT

Symbols & Devices Used:	p (pipette), a (annulus), b (both pipette and annulus)																		
Correction Factor			for 'p'	1		for 'a'	3.45		for 'b'	4.45									
Test Dates																			7/22/98
																			7/24/98
Field	5.1	10	78.5	8.0	5.0	2.0	3.0	21.7	5.0	19.7	p	16	2.0	2.0	0.1	211.3	3.8E-05
Core	5.1	10	78.5	8.0	5.0	2.0	3.0	21.7	7.0	17.7	p	32	4.0	4.0	0.1	211.3	3.8E-05
	5.1	10	78.5	8.0	5.0	2.0	3.0	21.7	9.0	15.9	p	50	5.9	5.9	0.1	211.3	3.6E-05
from	5.1	10	78.5	8.0	5.0	2.0	3.0	21.7	12.0	12.6	p	76	9.1	9.1	0.1	211.3	3.7E-05
	5.1	10	78.5	8.0	5.0	2.0	3.0	21.7	16.0	8.9	p	102	12.9	12.9	0.1	211.3	3.9E-05
US181	5.1	10	78.5	8.0	5.0	2.0	3.0	21.7	20.0	4.8	p	148	17.0	17.0	0.1	211.3	3.5E-05
	5.1	10	78.5	8.0	5.0	2.0	3.0	21.7	23.0	1.8	p	178	20.0	20.0	0.1	211.3	3.5E-05
Sp. # 3	5.1	10	78.5	15.6	8.0	2.0	8.0	20.0	11.0	17.0	p	23	3.0	3.0	0.1	422.5	2.0E-05
	5.1	10	78.5	15.6	8.0	2.0	8.0	20.0	14.0	14.0	p	46	6.0	6.0	0.1	422.5	2.0E-05
HMAC	5.1	10	78.5	15.6	8.0	2.0	8.0	20.0	18.0	10.0	p	78	10.0	10.0	0.1	422.5	2.0E-05
+	5.1	10	78.5	15.6	8.0	2.0	8.0	20.0	21.0	7.0	p	102	13.0	13.0	0.1	422.5	2.0E-05
Chip	5.1	10	78.5	15.6	8.0	2.0	8.0	20.0	23.0	5.2	p	120	14.9	14.9	0.1	422.5	1.9E-05
Seal	5.1	10	78.5	30.0	15.0	2.0	2.0	23.5	4.5	21.0	b	46	2.5	11.1	0.2	915.5	1.7E-05
+	5.1	10	78.5	30.0	15.0	2.0	2.0	23.5	6.0	19.5	b	77	4.0	17.8	0.2	915.5	1.6E-05
Micro-	5.1	10	78.5	30.0	15.0	2.0	2.0	23.5	9.0	16.4	b	135	7.1	31.4	0.2	915.5	1.6E-05
	5.1	10	78.5	30.0	15.0	2.0	2.0	23.5	12.0	13.4	b	189	10.1	44.7	0.2	915.5	1.7E-05
	5.1	10	78.5	30.0	15.0	2.0	2.0	23.5	16.0	9.4	b	260	14.1	62.5	0.2	915.5	1.7E-05
	5.1	10	78.5	30.0	15.0	2.0	2.0	23.5	20.0	5.4	b	334	18.1	80.3	0.2	915.5	1.7E-05
	5.1	10	78.5	20.0	15.0	2.0	3.0	22.5	5.0	20.5	b	28	2.0	8.9	0.3	915.5	2.3E-05
	5.1	10	78.5	20.0	15.0	2.0	3.0	22.5	8.0	17.5	b	72	5.0	22.3	0.3	915.5	2.2E-05
	5.1	10	78.5	20.0	15.0	2.0	3.0	22.5	12.0	13.5	b	130	9.0	40.1	0.3	915.5	2.2E-05
	5.1	10	78.5	20.0	15.0	2.0	3.0	22.5	17.0	8.5	b	200	14.0	62.3	0.3	915.5	2.2E-05
	5.1	10	78.5	20.0	15.0	2.0	3.0	22.5	20.0	5.5	b	245	17.0	75.7	0.3	915.5	2.2E-05
																AVERAGE	**2.5E-05**
Field	4.5	10	78.5	25.0	5.3	2.0	3.0	22.7	8.0	17.5	b	75	5.1	22.7	0.3	232.4	7.5E-05
Core	4.5	10	78.5	25.0	5.3	2.0	3.0	22.7	10.0	15.5	b	105	7.1	31.6	0.3	232.4	7.4E-05
1100-2	4.5	10	78.5	25.0	5.3	2.0	3.0	22.7	14.0	11.5	b	162	11.1	49.4	0.3	232.4	7.5E-05
	4.5	10	78.5	25.0	5.3	2.0	3.0	22.7	17.0	8.5	b	202	14.1	62.7	0.3	232.4	7.7E-05
																AVERAGE	**7.5E-05**

Specimen Preparation and Testing

Shear Test

Chip Seal Preparation						
Date	HFRS-2P			Aggregare		
	Weight grams	Area cm2	Appl. Rate Litre/m2	Grade	Weight grams	Appl. Rate Kg/m2
8/10/98	42.0	176.6	2.34	4	191	10.8

Microsurfacing Specimen Preparation			
Specimen ID **ShG4-22**		Date	8/11/98
	Type	Percent*	Weight grams
Aggregate	Delta	100	300.0
Filler	Cement	1.5	4.5
Water	Tap	10	30.0
Additive		0.1	0.3
Emulsion	CCS-1P	11	33.0
		Total	367.8

* Percent of the Aggregate Weight

Specimen Dimensions		
Diameter	150	mm
Height	72	mm
Area	176.6	cm^2
Volume	1271.7 Approx.	cm^3

Gradation for Microsurfacing				
Grade 2				
Sieves		Range		
U.S. Units	SI,mm Units	Upper Limit	Lower Limit	Selected Gradation
1	25	100	100	100
3/4	19	100	100	100
1/2	12.5	100	100	100
3/8	9.5	100	99	99.5
#4	4.75	94	86	90
#8	2.36	65	45	55
#16	1.18	46	25	35.5
#30	0.6	35	15	25
#50	0.3	25	10	17.5
#100	0.15	18	7	12.5
#200	0.075	15	5	10
pan	0	0	0	0

Microsurfacing Application Rate		
Weight Applied	344	Grams
Application Rate	19.5	Kg/m^2

Conditioning		
Temperature	25	C
Duration	72	hours
Date		8/11/98

Repeated Shear Test at Constant Height		
Test Date		
Shear Load	0.6	KN
Shear Stress	34	KPa
Temperature	58	C
Loading Frequency	10	Hz
# of Cycles	1000	
Max. Deformation	4.2	mm

Remarks: Chip seal was first laid over a 150-mm lab-compacted HMAC, followed by microsurfacing over the chip seal. After the test, visual inspection of the specimen indicated most failure at the interface of chip seal and HMAC and some failure at the interface of chip seal and microsurfacing.

Cape Seal

Specimen Preparation and Testing

Shear Test

Chip Seal Preparation						
Date	HFRS-2P			Aggregare		
	Weight grams	Area cm2	Appl. Rate Litre/m2	Grade	Weight grams	Appl. Rate Kg/m2
8/10/98	30.0	176.6	1.67	5	115	6.5

Microsurfacing Specimen Preparation			
Specimen ID **ShG5-22**		Date	8/11/98
	Type	Percent*	Weight grams
Aggregate	Delta	100	300.0
Filler	Cement	1.5	4.5
Water	Tap	10	30.0
Additive		0.1	0.3
Emulsion	CCS-1P	11	33.0
		Total	367.8

* Percent of the Aggregate Weight

Gradation for Microsurfacing				
Grade 2				
Sieves		Range		
U.S. Units	SI,mm Units	Upper Limit	Lower Limit	Selected Gradation
1	25	100	100	100
3/4	19	100	100	100
1/2	12.5	100	100	100
3/8	9.5	100	99	99.5
#4	4.75	94	86	90
#8	2.36	65	45	55
#16	1.18	46	25	35.5
#30	0.6	35	15	25
#50	0.3	25	10	17.5
#100	0.15	18	7	12.5
#200	0.075	15	5	10
pan	0	0	0	0

Specimen Dimensions			
Diameter	150		mm
Height	63		mm
Area	176.6		cm^2
Volume	1112.7	Approx.	cm^3

Microsurfacing Application Rate		
Weight Applied	344	Grams
Application Rate	19.5	Kg/m^2

Conditioning		
Temperature	25	C
Duration	72	hours
Date		8/11/98

Repeated Shear Test at Constant Height		
Test Date		
Shear Load	0.6	KN
Shear Stress	34	KPa
Temperature	58	C
Loading Frequency	10	Hz
# of Cycles	800	
Max. Deformation	4.4	mm

Remarks: Chip seal was first laid over a 150-mm lab-compacted HMAC, followed by microsurfacing over the chip seal. Failure towards the sides was basically coming from separation of chip seal from HMAC. To a lesser extent, separation of microsurfacing from the chip seal was observed around the center.

Cape Seal

Specimen Preparation and Testing

Shear Test

Chip Seal Preparation						
Date	HFRS-2P			Aggregare		
	Weight grams	Area cm2	Appl. Rate Litre/m2	Grade	Weight grams	Appl. Rate Kg/m2
8/10/98	30.0	176.6	1.67	5	115	6.5

Microsurfacing Specimen Preparation			
Specimen ID **ShG5-21**		Date	8/11/98
	Type	Percent*	Weight grams
Aggregate	Delta	100	205.0
Filler	Cement	1.5	3.1
Water	Tap	10	20.5
Additive		0.1	0.2
Emulsion	CCS-1P	11	22.6
		Total	251.3

* Percent of the Aggregate Weight

Gradation for Microsurfacing				
Grade 2				
Sieves		Range		
U.S. Units	SI,mm Units	Upper Limit	Lower Limit	Selected Gradation
1	25	100	100	100
3/4	19	100	100	100
1/2	12.5	100	100	100
3/8	9.5	100	99	99.5
#4	4.75	94	86	90
#8	2.36	65	45	55
#16	1.18	46	25	35.5
#30	0.6	35	15	25
#50	0.3	25	10	17.5
#100	0.15	18	7	12.5
#200	0.075	15	5	10
pan	0	0	0	0

Microsurfacing Application Rate		
Weight Applied	234	Grams
Application Rate	13.3	Kg/m^2

Specimen Dimensions		
Diameter	150	mm
Height	70	mm
Area	176.6	cm^2
Volume	1236.4 Approx.	cm^3

Conditioning	
Temperature	25 C
Duration	72 hours
Date	8/11/98

Repeated Shear Test at Constant Height		
Test Date		
Shear Load	0.6	KN
Shear Stress	34	KPa
Temperature	58	C
Loading Frequency	10	Hz
# of Cycles	1000	
Max. Deformation	1.1	mm

Remarks: Chip seal was first laid over a 150-mm lab-compacted HMAC, followed by microsurfacing over the chip seal.

Cape Seal
Specimen Preparation and Testing
Shear Test

Chip Seal Preparation						
Date	HFRS-2P			Aggregare		
	Weight grams	Area cm^2	Appl. Rate Litre/m^2	Grade	Weight grams	Appl. Rate Kg/m^2
8/10/98	40.0	176.6	2.22	4	183	10.4

Microsurfacing Specimen Preparation			
Specimen ID	**ShG4-21**	Date	8/11/98
	Type	Percent*	Weight grams
Aggregate	Delta	100	205.0
Filler	Cement	1.5	3.1
Water	Tap	10	20.5
Additive		0.1	0.2
Emulsion	CCS-1P	11	22.6
		Total	251.3

* Percent of the Aggregate Weight

Specimen Dimensions		
Diameter	150	mm
Height	67	mm
Area	176.6	cm^2
Volume	1183 Approx.	cm^3

Gradation for Microsurfacing				
Grade 2				
Sieves		Range		
U.S. Units	SI,mm Units	Upper Limit	Lower Limit	Selected Gradation
1	25	100	100	100
3/4	19	100	100	100
1/2	12.5	100	100	100
3/8	9.5	100	99	99.5
#4	4.75	94	86	90
#8	2.36	65	45	55
#16	1.18	46	25	35.5
#30	0.6	35	15	25
#50	0.3	25	10	17.5
#100	0.15	18	7	12.5
#200	0.075	15	5	10
pan	0	0	0	0

Microsurfacing Application Rate		
Weight Applied	236	Grams
Application Rate	13.4	Kg/m^2

Conditioning		
Temperature	25	C
Duration	72	hours
Date		8/11/98

Repeated Shear Test at Constant Height		
Test Date		
Shear Load	0.6	KN
Shear Stress	34	KPa
Temperature	58	C
Loading Frequency	10	Hz
# of Cycles	1000	
Max. Deformation	3.6	mm

Remarks: Chip seal was first laid over a 150-mm lab-compacted HMAC, followed by microsurfacing over the chip seal. After the test, visual inspection of the specimen indicated most failure at the interface of chip seal and HMAC and some failure at the interface of chip seal and microsurfacing.

Cape Seal

Specimen Preparation and Testing

Chip Seal Preparation						
Date	HFRS-2P			Aggregare		
	Weight grams	Area cm2	Appl. Rate Litre/m2	Grade	Weight grams	Appl. Rate Kg/m2
7/28/98	0.0	197.6	0.00	N/A	0	0.0

Microsurfacing Specimen Preparation			
Specimen ID	**MC-00**	Date	7/29/98
	Type	Percent*	Weight grams
Aggregate	Delta	100	350.0
Filler	Cement	1.5	5.3
Water	Tap	10	35.0
Additive		0.1	0.4
Emulsion	CCS-1P	11	38.5
		Total	429.1

* Percent of the Aggregate Weight

Gradation for Microsurfacing				
Grade 2				
Sieves		Range		
U.S. Units	SI,mm Units	Upper Limit	Lower Limit	Selected Gradation
1	25	100	100	100
3/4	19	100	100	100
1/2	12.5	100	100	100
3/8	9.5	100	99	99.5
#4	4.75	94	86	90
#8	2.36	65	45	55
#16	1.18	46	25	35.5
#30	0.6	35	15	25
#50	0.3	25	10	17.5
#100	0.15	18	7	12.5
#200	0.075	15	5	10
pan	0	0	0	0

Specimen Dimensions			
Length	370		mm
Width	51		mm
Height	10.4		mm
Area	188.7		cm3
Volume	196.2	Approx.	cm^3

Microsurfacing Application Rate		
Weight Applied	408	Grams
Application Rate	20.6	Kg/m2

Conditioning		
Temperature	60	C
Duration	15	hours
Date		7/28/98

LWT

Measurements				
	Before Test	After Test		Percent Change
Height	10.4	8.5	mm	18.3
Width	51	54	mm	5.9
Wgt,PL	112	112	grams	
Wgt,w/P	441.3	447.6	grams	
Net Wgt	329.3	335.6	grams	1.9
Sand Adhesion		6.3	grams	

LWT

Load	Newtons	560+130
No. of Cycles w/o Sand		1000
No. of Cycles with San		100
Test Date		7/30/98

Remarks: For this specimen, only a layer of microsurfacing was made. No chip seal was made. Specimen was in very good shape after the LWT.

Cape Seal

Specimen Preparation and Testing

Chip Seal Preparation						
Date	HFRS-2P			Aggregare		
	Weight grams	Area cm2	Appl. Rate Litre/m2	Grade	Weight grams	Appl. Rate Kg/m2
7/28/98	36.0	197.6	1.79	4	246	12.4

Microsurfacing Specimen Preparation			
Specimen ID	**MC-4/L**	Date	7/29/98
	Type	Percent*	Weight grams
Aggregate	Delta	100	220.0
Filler	Cement	1.5	3.3
Water	Tap	10	22.0
Additive		0.1	0.2
Emulsion	CCS-1P	11	24.2
		Total	269.7

* Percent of the Aggregate Weight

Gradation for Microsurfacing				
Grade 2				
Sieves		Range		
U.S. Units	SI,mm Units	Upper Limit	Lower Limit	Selected Gradation
1	25	100	100	100
3/4	19	100	100	100
1/2	12.5	100	100	100
3/8	9.5	100	99	99.5
#4	4.75	94	86	90
#8	2.36	65	45	55
#16	1.18	46	25	35.5
#30	0.6	35	15	25
#50	0.3	25	10	17.5
#100	0.15	18	7	12.5
#200	0.075	15	5	10
pan	0	0	0	0

Specimen Dimensions		
Length	380	mm
Width	52	mm
Height	15	mm
Area	197.6	cm3
Volume	296.4 Approx.	cm^3

Microsurfacing Application Rate		
Weight Applied	230	Grams
Application Rate	11.6	Kg/m2

Conditioning		
Temperature	60	C
Duration	15	hours
Date		7/30/98

LWT

Measurements				
	Before Test	After Test		Percent Change
Height	15	4.5	mm	70.0
Width	52	93	mm	78.8
Wgt,PL	112	112	grams	
Wgt,w/P	594.8	619.2	grams	
Net Wgt	482.8	507.2	grams	5.1
Sand Adhesion		24.4	grams	

LWT

Load	Newtons	560+130
No. of Cycles w/o Sand		1000
No. of Cycles with Sanc		100
Test Date		7/31/98

Remarks: The microsurfacing was laid over the chip seal for the LWT.

Cape Seal

Specimen Preparation and Testing

Chip Seal Preparation						
Date	HFRS-2P			Aggregare		
	Weight grams	Area cm2	Appl. Rate Litre/m2	Grade	Weight grams	Appl. Rate Kg/m2
7/28/98	36.0	197.6	1.79	4	229	11.6

Microsurfacing Specimen Preparation			
Specimen II	**MC-4/H**	Date	7/29/98
	Type	Percent*	Weight grams
Aggregate	Delta	100	350.0
Filler	Cement	1.5	5.3
Water	Tap	10	35.0
Additive		0.1	0.4
Emulsion	CCS-1P	11	38.5
		Total	429.1

* Percent of the Aggregate Weight

Gradation for Microsurfacing				
Grade 2				
Sieves		Range		
U.S. Units	SI,mm Units	Upper Limit	Lower Limit	Selected Gradation
1	25	100	100	100
3/4	19	100	100	100
1/2	12.5	100	100	100
3/8	9.5	100	99	99.5
#4	4.75	94	86	90
#8	2.36	65	45	55
#16	1.18	46	25	35.5
#30	0.6	35	15	25
#50	0.3	25	10	17.5
#100	0.15	18	7	12.5
#200	0.075	15	5	10
pan	0	0	0	0

Specimen Dimensions		
Length	380	mm
Width	53	mm
Height	16	mm
Area	201.4	cm3
Volume	322.2 Approx.	cm^3

Microsurfacing Application Rate		
Weight Applied	408	Grams
Application Rate	20.6	Kg/m2

Conditioning		
Temperature	60	C
Duration	15	hours
Date		7/30/98

LWT

Measurements				
	Before Test	After Test		Percent Change
Height	16	3.5	mm	78.1
Width	53	99	mm	86.8
Wgt,PL	112	112	grams	
Wgt,w/P	715.2	739.4	grams	
Net Wgt	603.2	627.4	grams	4.0
Sand Adhesion		24.2	grams	

LWT

Load	Newtons	560+130
No. of Cycles w/o Sand		1000
No. of Cycles with San		100
Test Date		7/31/98

Remarks: The microsurfacing was laid over the chip seal for the LWT.

Cape Seal

Specimen Preparation and Testing

Chip Seal Preparation						
Date	HFRS-2P			Aggregare		
	Weight grams	Area cm2	Appl. Rate Litre/m2	Grade	Weight grams	Appl. Rate Kg/m2
7/27/98	28.0	197.6	1.39	5	135	6.8

Microsurfacing Specimen Preparation			
Specimen ID	**MC-5/L**	Date	7/28/98
	Type	Percent*	Weight grams
Aggregate	Delta	100	220.0
Filler	Cement	1.5	3.3
Water	Tap	10	22.0
Additive		0.1	0.2
Emulsion	CCS-1P	11	24.2
		Total	269.7

* Percent of the Aggregate Weight

Specimen Dimensions		
Length	380	mm
Width	52	mm
Height	11.2	mm
Area	197.6	cm3
Volume	221.3 Approx.	cm^3

Gradation for Microsurfacing				
Grade 2				
Sieves		Range		
U.S. Units	SI,mm Units	Upper Limit	Lower Limit	Selected Gradation
1	25	100	100	100
3/4	19	100	100	100
1/2	12.5	100	100	100
3/8	9.5	100	99	99.5
#4	4.75	94	86	90
#8	2.36	65	45	55
#16	1.18	46	25	35.5
#30	0.6	35	15	25
#50	0.3	25	10	17.5
#100	0.15	18	7	12.5
#200	0.075	15	5	10
pan	0	0	0	0
Microsurfacing Application rate				
Weight Applied		230	Grams	
Application Rate		11.6	Kg/m2	

Conditioning		
Temperature	60	C
Duration	15	hours
Date		7/28/98

LWT TEST

Load	Newtons	560+130
No. of Cycles w/o Sand		1000
No. of Cycles with Sanc		100
Test Date		7/31/98

LWT TEST

Measurements				
	Before Test	After Test		Percent Change
Height	11.2	3.5	mm	68.8
Width	52	85	mm	63.5
Wgt,PL	112	112	grams	
Wgt,w/P	483	492	grams	
Net Wgt	371	380	grams	2.4
Sand Adhesion		9	grams	

Remarks: The microsurfacing was laid over the chip seal for the loaded-wheel testing.

Cape Seal

Specimen Preparation and Testing

Chip Seal Preparation						
Date	HFRS-2P			Aggregare		
	Weight grams	Area cm2	Appl. Rate Litre/m2	Grade	Weight grams	Appl. Rate Kg/m2
7/27/98	28.0	197.6	1.39	5	139	7.0

Microsurfacing Specimen Preparation			
Specimen II	**MC-5/H**	Date	7/28/98
	Type	Percent*	Weight grams
Aggregate	Delta	100	350.0
Filler	Cement	1.5	5.3
Water	Tap	10	35.0
Additive		0.1	0.4
Emulsion	CCS-1P	11	38.5
		Total	429.1

* Percent of the Aggregate Weight

Gradation for Microsurfacing				
Grade 2				
Sieves		Range		
U.S. Units	SI,mm Units	Upper Limit	Lower Limit	Selected Gradation
1	25	100	100	100
3/4	19	100	100	100
1/2	12.5	100	100	100
3/8	9.5	100	99	99.5
#4	4.75	94	86	90
#8	2.36	65	45	55
#16	1.18	46	25	35.5
#30	0.6	35	15	25
#50	0.3	25	10	17.5
#100	0.15	18	7	12.5
#200	0.075	15	5	10
pan	0	0	0	0

Specimen Dimensions		
Length	380	mm
Width	52	mm
Height	14.5	mm
Area	197.6	cm3
Volume	286.5 Approx.	cm^3

Microsurfacing Application Rate		
Weight Applied	408	Grams
Application Rate	20.6	Kg/m2

Conditioning		
Temperature	60	C
Duration	15	hours
Date		7/28/98

LWT

Measurements				
	Before Test	After Test		Percent Change
Height	14.5	3.5	mm	75.9
Width	52	85	mm	63.5
Wgt,PL	112	112	grams	
Wgt,w/P	601.6	615.3	grams	
Net Wgt	489.6	503.3	grams	2.8
Sand Adhesion		13.7	grams	

LWT TEST

Load	Newtons	560+130
No. of Cycles w/o Sand		1000
No. of Cycles with San		100
Test Date		7/30/98

Remarks: The microsurfacing was laid over the chip seal for the LWT.