Appendix 12

FED. ROAD DIV. NO.	STATE	FEDERAL AID PROJECT NO.	SHEET NO.
6	TEXAS	STP 2005(792) SFT	1
STATE DISTRICT	COUNTY	STATE CONTROL NO.	HIGHWAY NO.
FTW	PARKER	0314-07-032	IH 20

STATE OF TEXAS
DEPARTMENT OF TRANSPORTATION

PLANS OF PROPOSED
STATE HIGHWAY IMPROVEMENT

FEDERAL AID PROJECT STP 2005(792) SFT
PARKER COUNTY
IH 20

FROM: SP 312
TO: FM 1884

FOR THE CONSTRUCTION OF INSTALLING MEDIAN BARRIER

NET LENGTH = 25,417 FT = 4.8 MI

LETTING DATE: _____
DATE WORK BEGAN: _____
DATE WORK COMPLETED: _____
DATE WORK ACCEPTED: _____
CONTRACTOR: _____

INDEX OF SHEETS

SHEET NO.	DESCRIPTION
1	TITLE SHEET
2	TYPICAL SECTIONS
3, 3A-3B	GENERAL NOTES
4	ESTIMATE & QUANTITY
5	TCP (2-1) - 98
6	TCP (6-1) - 98A
7	BC (1) - 03
8	BC (2) - 03
9	BC (3) - 03
10	BC (4) - 03
11 **	BC (5) - 03
12	BC (6) - 03
13	BC (7) - 03
14	BC (8) - 03
15	BC (9) - 03
16	BC (10) - 03
17	BC (11) - 03
18	BC (12) - 03
19	PROJECT LAYOUT
20	ROADWAY DETAILS
21	WIRE ROPE SAFETY FENCE
22	CABLE SAFETY SYSTEM
△ 22A	GIBRALTAR CABLE BARRIER SYSTEM
23	EPIC (FW)
24	SW3P
25 **	EC (1) - 93

△ REVISED 6.28.2005

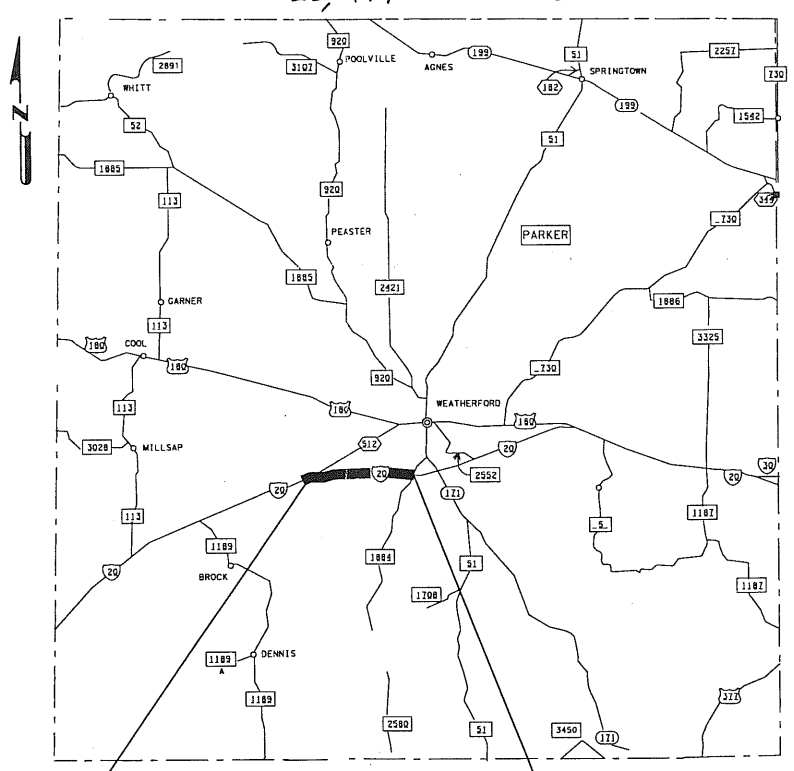

BEGIN PROJECT
STA 1983 + 09.10
REF MKR = 402 + 0.283

END PROJECT
STA 2237+26.50
REF MKR = 407+0.097 MI

NO RAILROADS
NO EXCEPTION
NO EQUATIONS

STATE OF TEXAS
JIMMEY F. BODIFORD
74250
REGISTERED
PROFESSIONAL ENGINEER

Jimmey F. Bodiford, P.E.
3-23-05

TEXAS DEPARTMENT OF TRANSPORTATION

SUBMITTED FOR LETTING: 3-23-05
Jimmey F. Bodiford, P.E.
AREA ENGINEER

RECOMMEND FOR LETTING: 3/29/05
Manuel P. Chavez P.E.
DISTRICT ENGINEER

APPROVED FOR LETTING: _____
DIRECTOR, TRAFFIC OPERATIONS DIVISION

APPROVED FOR LETTING: _____
DIRECTOR OF BRIDGE DIVISION

APPROVED FOR LETTING: 05.26.05
Maria C. Rodriguez, P.E.
FOR DIRECTOR OF DESIGN DIVISION

** — STANDARD SHEETS SPECIFICALLY IDENTIFIED ABOVE HAVE BEEN SELECTED BY ME OR UNDER MY RESPONSIBLE SUPERVISION AS BEING APPLICABLE TO THIS PROJECT.

NOTE: SPECIFICATIONS ADOPTED BY THE TEXAS DEPARTMENT OF TRANSPORTATION, JUNE 1, 2004 AND SPECIFICATIONS ITEMS LISTED AND DATED AS FOLLOWS, SHALL GOVERN ON THIS PROJECT: REQUIRED CONTRACT PROVISIONS FOR ALL FEDERAL-AID CONSTRUCTION CONTRACTS (FORM FHWA 1273, DECEMBER, 1993)

© 2005 by Texas Department of Transportation; all rights reserved

STP2005(792)SFT

PARKER

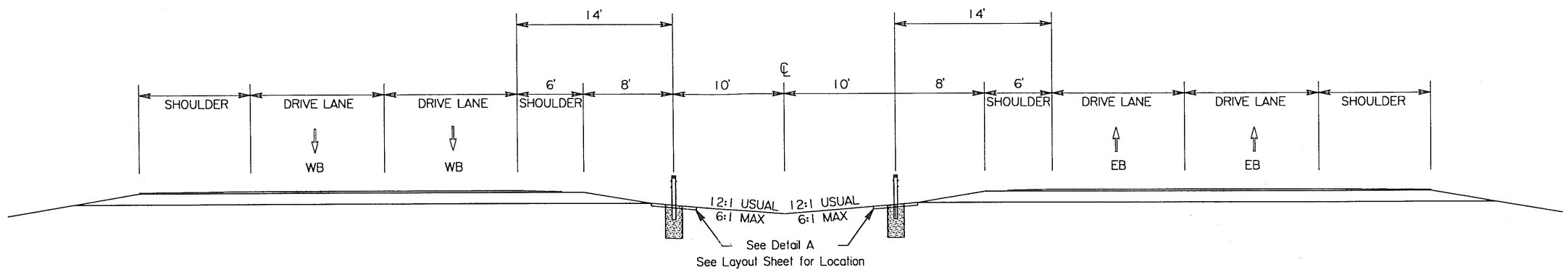

TYPICAL SECTION

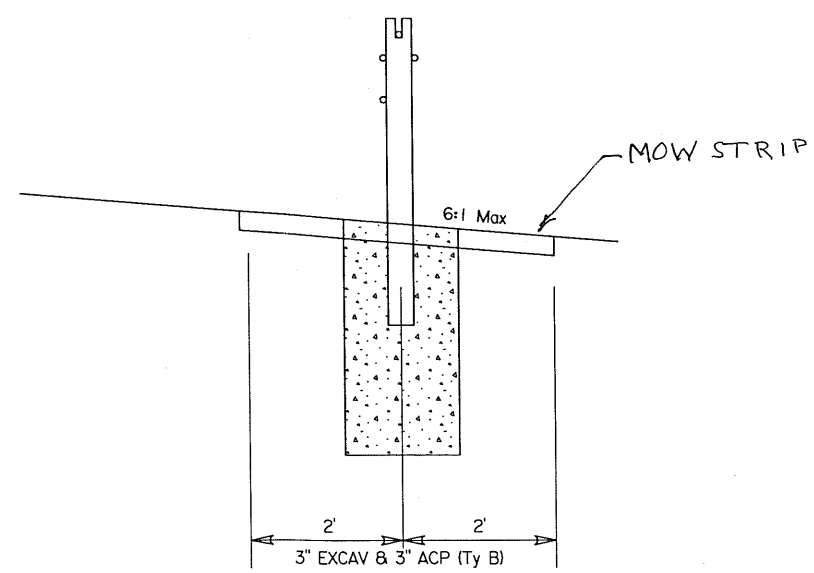

Detail A

STATE OF TEXAS
JIMMEY F. BODIFORD
74250
REGISTERED
PROFESSIONAL ENGINEER

Jimmey F. Bodiford, P.E.
3-23-05

TYPICAL SECTIONS

FED. RD. DIV. NO.	FEDERAL AID PROJECT NO.		SHEET NO.
6			2
STATE	STATE DIST. NO.	COUNTY	
TEXAS	FTW	PARKER	
CONT.	SECT.	JOB	HIGHWAY NO.
0314	07	032	IH 20

© 2005 by Texas Department of Transportation; all rights reserved

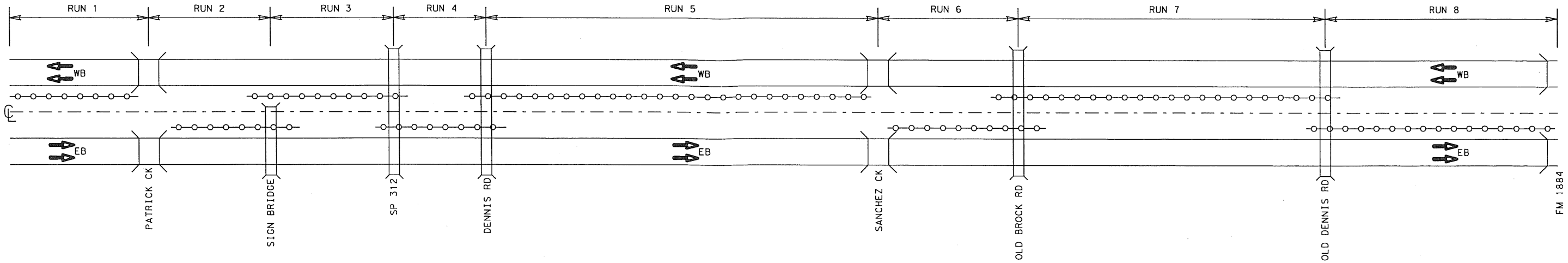

-o-o-o-o-o-o-o- WIRE CABLE FENCE

RUN NO.	FROM	TO	EXCAVATION (CY)	SEEDING (SY)	VEG WATER (MG)	ACP (TY B) (TON)	WIRE ROPE/CABLE (LF)	TERMINAL SECT (EA)
1	BEGIN PROJECT	PATRICK CREEK	109	1301	27.4	215	2827	2
2	PATRICK CREEK	SIGN BRIDGE	64	765	16.1	127	1620	2
3	SIGN BRIDGE	SP 312	119	1420	29.9	235	3093	2
4	SP 312	DENNIS RD	66	791	16.7	131	1679	2
5	DENNIS RD	SANCHEZ CREEK	278	3328	70.0	550	7388	2
6	SANCHEZ CREEK	OLD BROCK RD	99	1184	24.9	196	2562	2
7	OLD BROCK RD	OLD DENNIS RD	228	2735	57.5	452	6053	2
8	OLD DENNIS RD	FM 1884	173	2073	43.6	342	4563	2
		SHEET TOTALS	1136	13597	286.1	2248	29785	16

STATE OF TEXAS
JIMMEY F. BODIFORD
74250
REGISTERED PROFESSIONAL ENGINEER

Jimmey F. Bodiford, P.E.
3-23-05

PROJECT LAYOUT

FED. RD. DIV. NO.	FEDERAL AID PROJECT NO.		SHEET NO.
6			19
STATE	STATE DIST. NO.	COUNTY	
TEXAS	FTW	PARKER	
CONT.	SECT.	JOB	HIGHWAY NO.
0314	07	032	IH 20

© 2005 by Texas Department of Transportation; all rights reserved

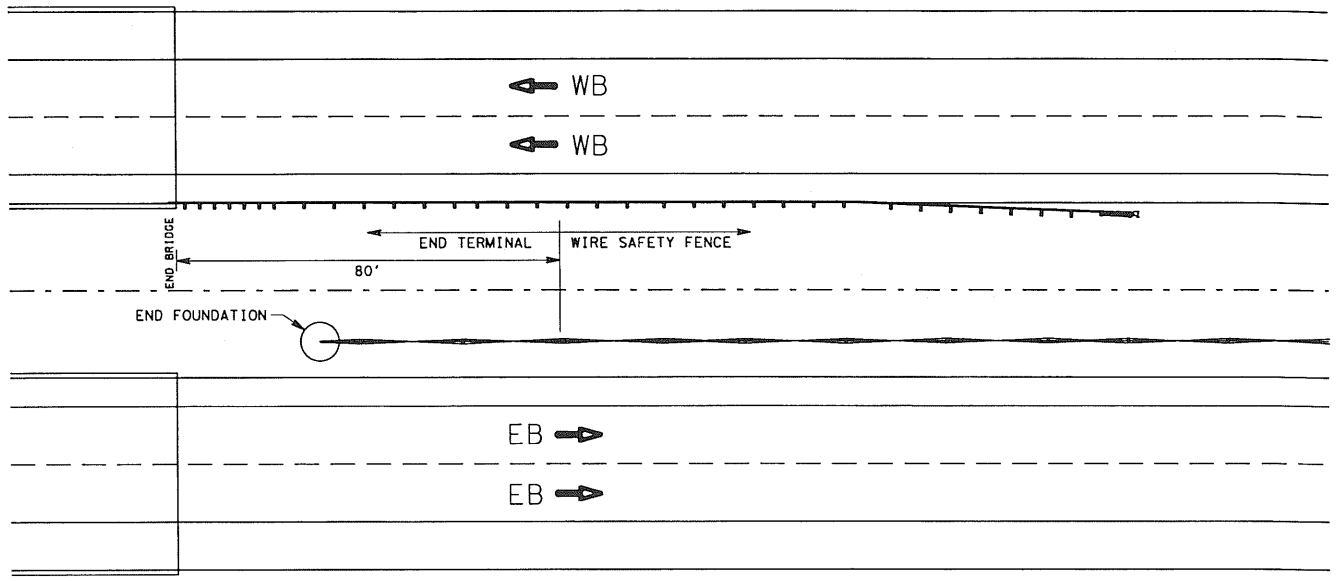

TYPICAL PLACEMENT AT BRIDGE END DETAIL

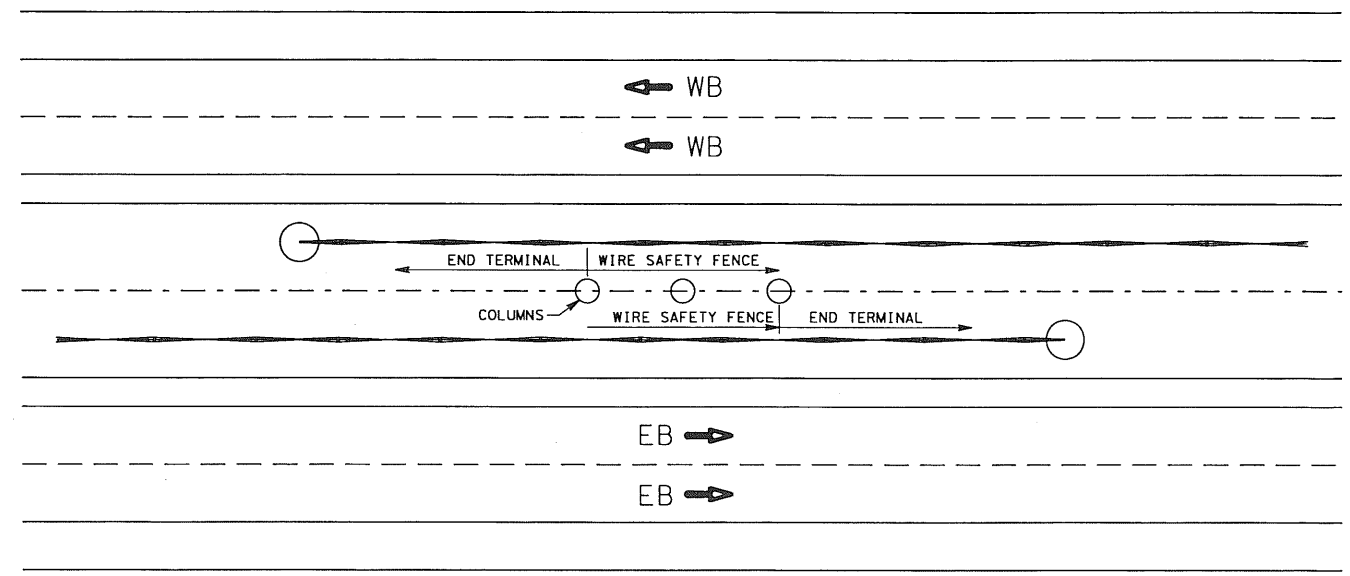

TYPICAL PLACEMENT AT BRIDGE COLUMNS - DETAIL 1

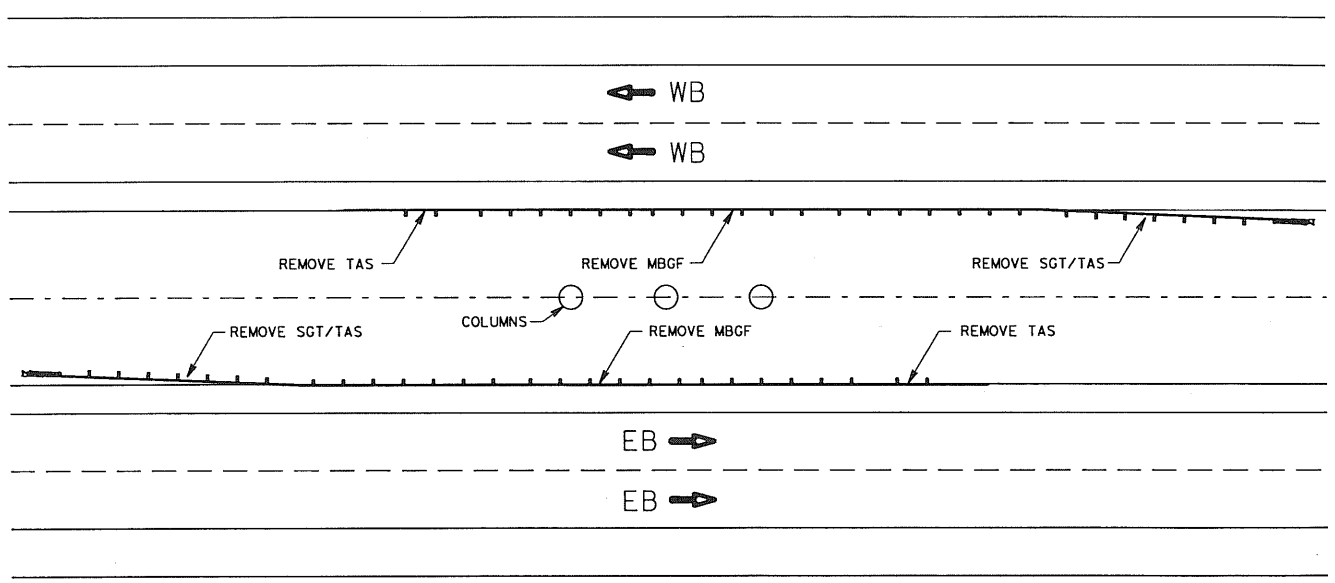

TYPICAL REMOVAL DETAIL

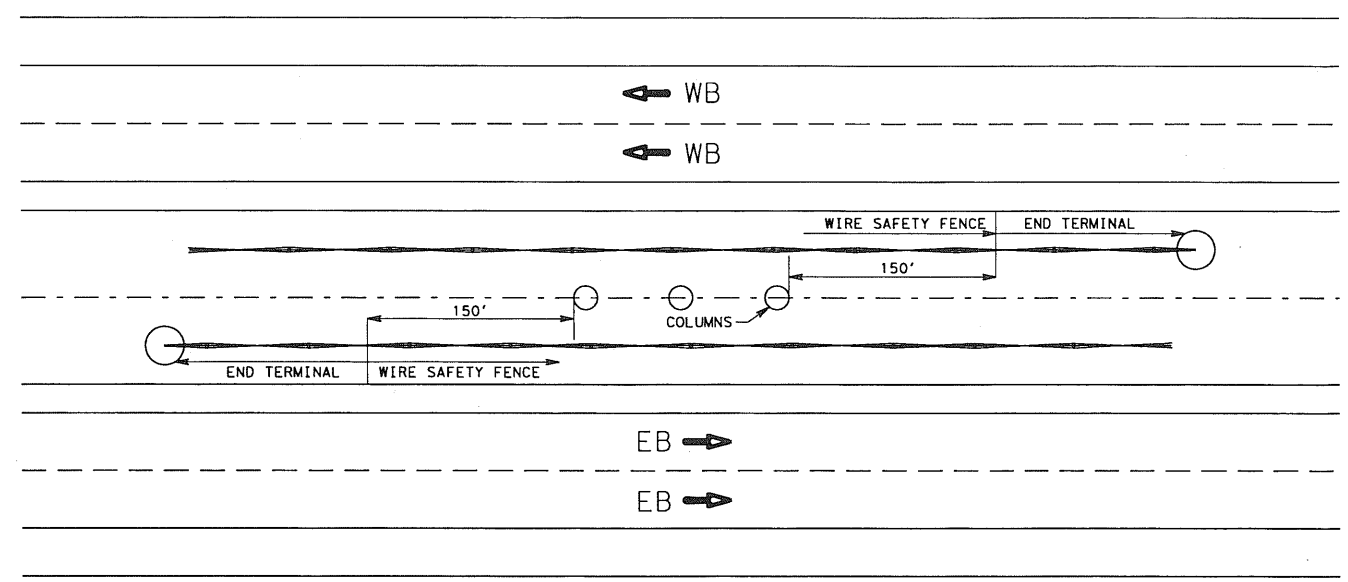

TYPICAL PLACEMENT AT BRIDGE COLUMNS - DETAIL 2

LOCATION	REMOVE TAS (EA)	REMOVE MBGF (LF)	REMOVE GET (EA)
SIGN BRIDGE	2	250	2
SP 312	2	350	2
DENNIS RD	2	250	2
OLD BROCK RD	2	250	2
OLD DENNIS RD	2	250	2
PROJECT TOTALS	10	1350	10

STATE OF TEXAS
JIMMEY F. BODIFORD
74250
REGISTERED PROFESSIONAL ENGINEER

Jimmey F. Bodiford, P.E.
3-23-05

© 2005 by Texas Department of Transportation; all rights reserved

ROADWAY DETAILS

FED. RD. DIV. NO.	FEDERAL AID PROJECT NO.		SHEET NO.
6			20
STATE	STATE DIST. NO.	COUNTY	
TEXAS	FTW	PARKER	
CONT.	SECT.	JOB	HIGHWAY NO.
0314	07	032	IH 20

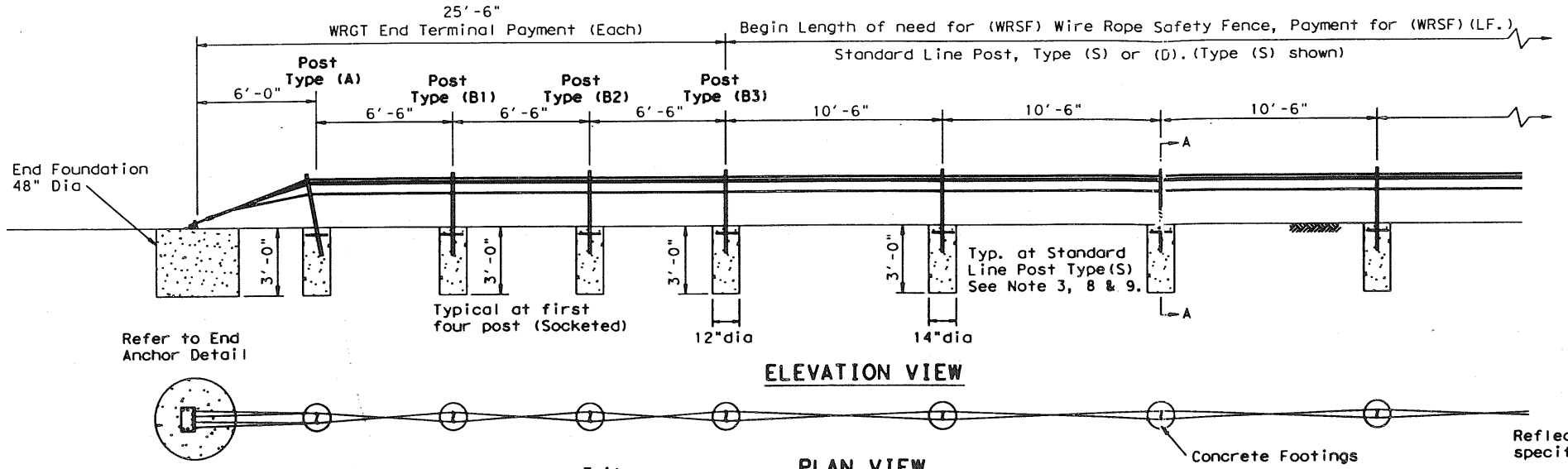

GENERAL NOTES

1. WRGT End Terminal meets NCHRP-350 TL-3.
2. No limit to length between end terminals.
3. All posts are set in concrete sockets unless otherwise specified.
4. Spacing of the line post may be decreased. For additional information see the manufacturer's product manual.
5. End Terminal is NCHRP-350 approved and may be located within the Horizontal Clear Zone. End Terminal may not exceed 25:1, 50:1 or less is preferred.
6. Wire Rope Safety Fence (WRSF) is recommended for installations on slopes of 6:1 or flatter, placed where an errant vehicle can approach on a relatively smooth surface.
7. WRSF may be installed on either side of the roadway. The radius edge of posts shall be on the approach side of traffic. Line post shall be socketed design unless otherwise specified.
8. First 15 line posts adjacent to WRGT End Terminal. Terminal Post do not have top rope slot. The top rope weaves on either side of posts until the first line post with a slot.
9. All posts are made so that ropes may be placed on either side of post depending on rope weave pattern.
10. For additional information, contact Brifen USA Inc. at 1-800-427-4336.

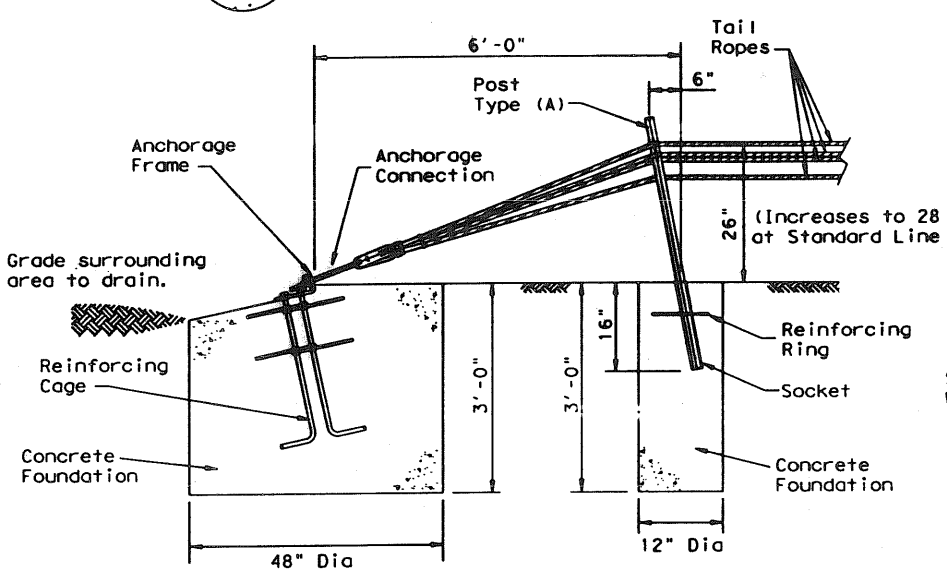

END ANCHORAGE DETAIL

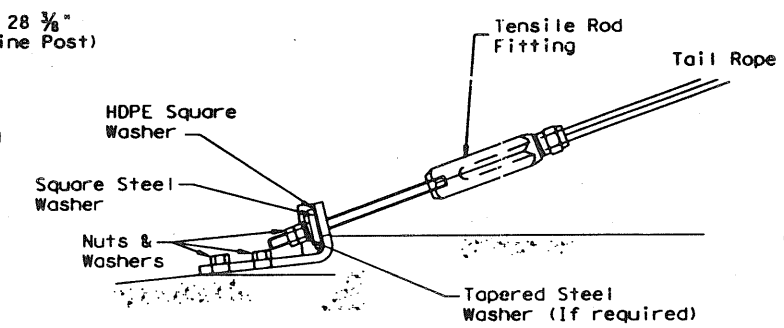

ANCHORAGE CONNECTION DETAIL

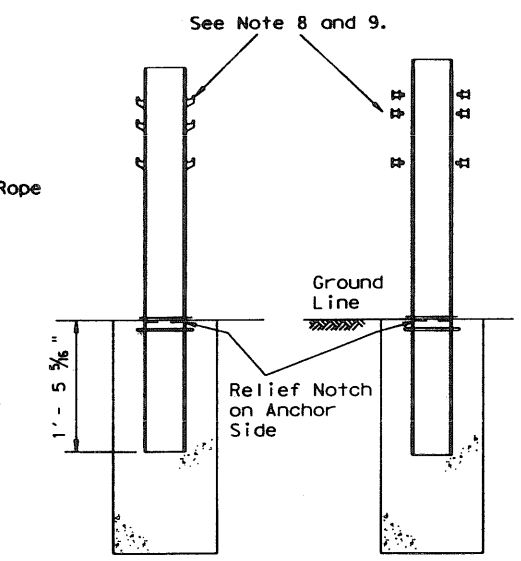

WRGT TERMINAL POSTS DETAIL

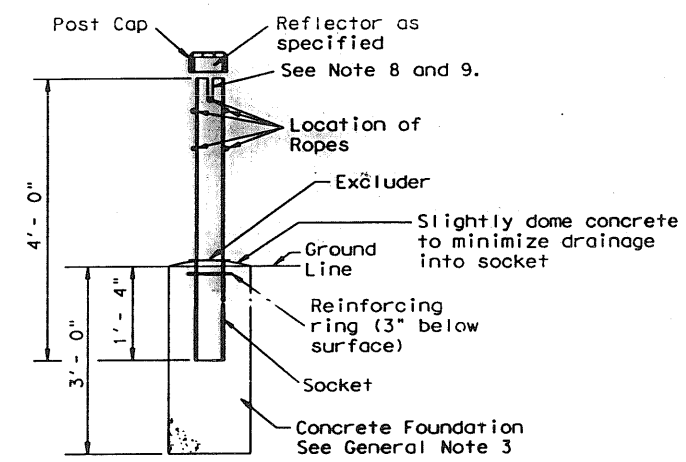

SECTION A-A

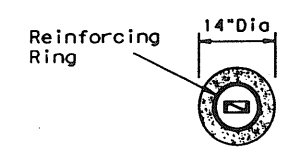

PLAN VIEW

STANDARD LINE POST
CONCRETE FOUNDATION
(SOCKET)

SOCKETED POST (TYPE S) DETAIL

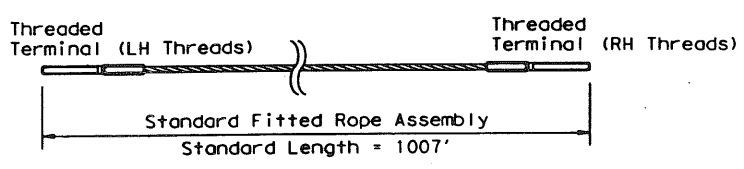

COMPONENT ROPE

TENSION CHART	
AMBIENT TEMPERATURE	ROPE TENSION
F	LBS
100	2110
95	2531
86	3150
77	3769
68	4387
59	5006
50	5625
41	6244
32	6863
23	7481
14	8100
0	9100

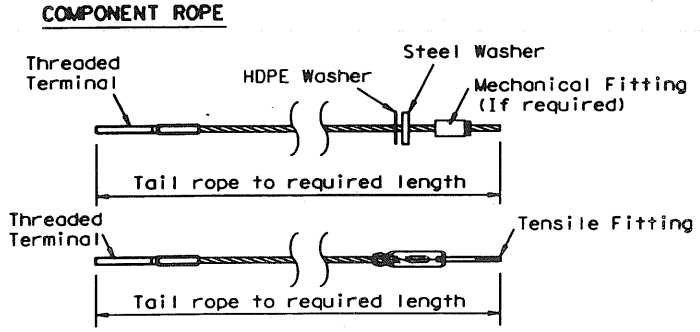

TAIL ROPE

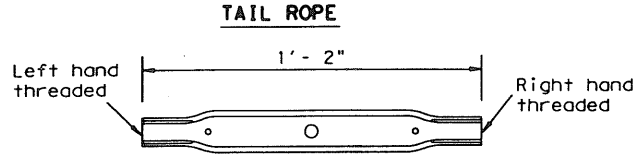

TURNBUCKLE/RIGGING SCREW [A52]

ROPE COMPONENTS AND TENSION CHART

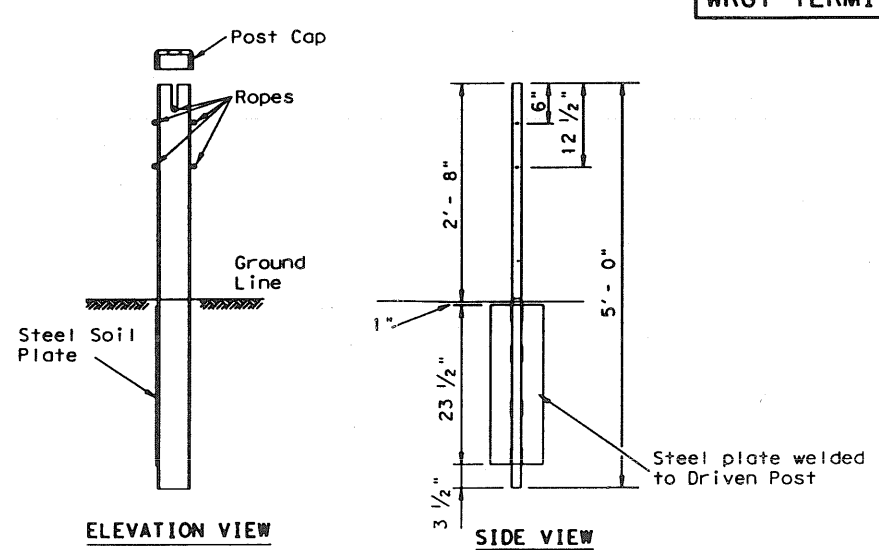

(OPTIONAL) LINE POST
See General Note 3

DRIVEN POST (TYPE D) DETAIL

STATE OF TEXAS
JERRY W. EMERSON
28220
REGISTERED PROFESSIONAL ENGINEER
2/26/05

WIRE ROPE SAFETY FENCE
(Brifen USA, Safety Fence)

FED. RD. DIV. NO.	FEDERAL AID PROJECT NO.		SHEET NO.
6			21
STATE	STATE DIST. NO.	COUNTY	
TEXAS	FTW	PARKER	
CONT.	SECT.	JOB	HIGHWAY NO.
0314	07	032	IH 20

DISCLAIMER:
The use of this standard is governed by the "Texas Engineering Practice Act". No warranty of any kind is made by TxDOT for any purpose whatsoever. TxDOT assumes no responsibility for the conversion of this standard to other formats or for incorrect results or damages resulting from its use.

LEVELS DISPLAYED

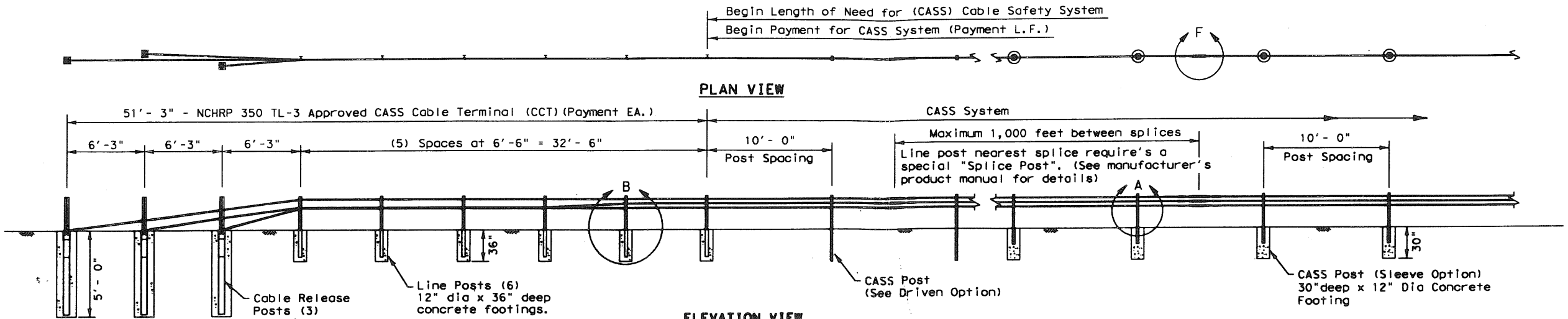

ELEVATION VIEW
(TYPICAL LAYOUT)

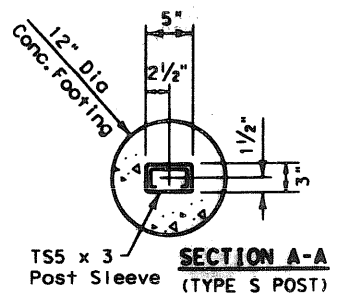

SECTION A-A
(TYPE S POST)

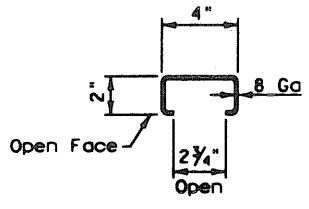

SECTION A-A
(TYPE D POST)

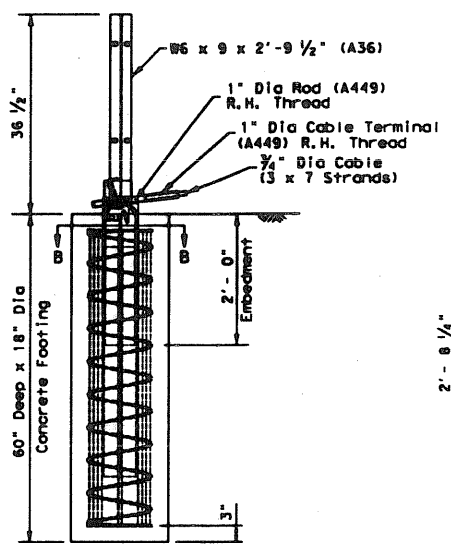

(3) CABLE RELEASE POST

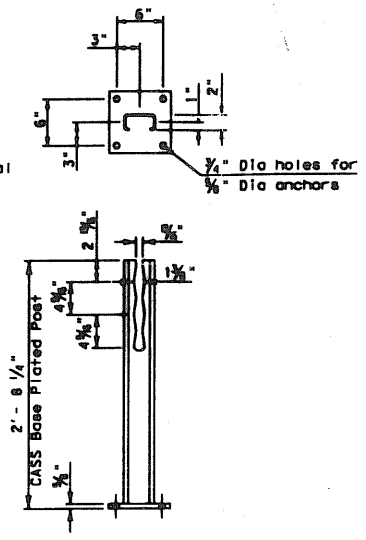

BASE-PLATED POST
(TYPE B POST)
FOR USE ON CONCRETE:
BASE-PLATED POST DESIGN IS NOT TO BE USED WITH CCT POSTS

Anchor Options:

1. ⅝" x 8" all threaded Rod (A449) with epoxy.
2. ⅝" Mechanical anchor.

(Min. embedment in concrete = 6".
Min. pullout strength = 10,000 lbs.)

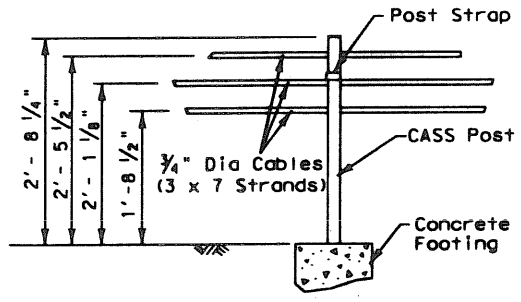

DETAIL A
(POST CABLE HEIGHT)

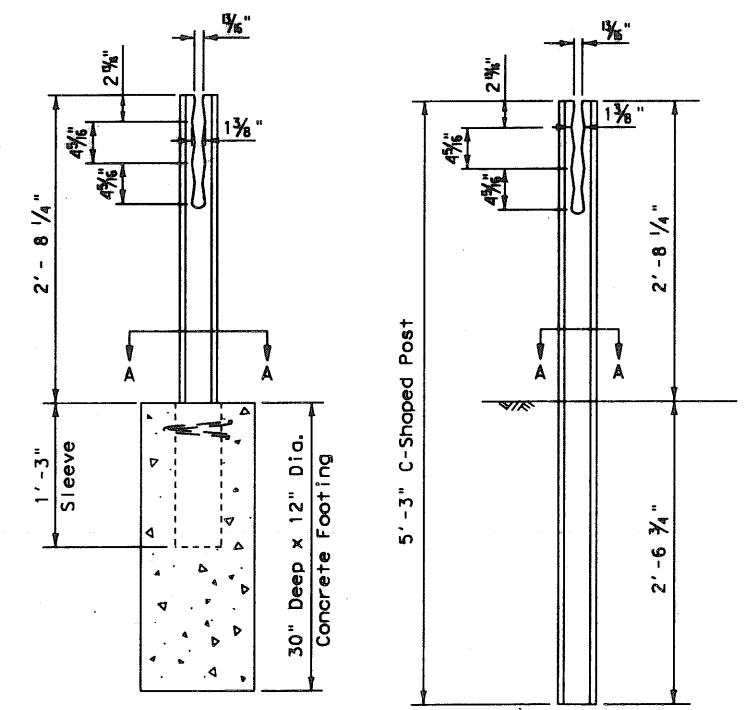

SOCKETED POST OPTION
(TYPE S POST)

DRIVEN POST OPTION
(TYPE D POST)

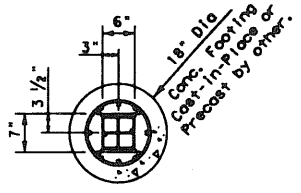

SECTION B-B
(CABLE RELEASE POST)

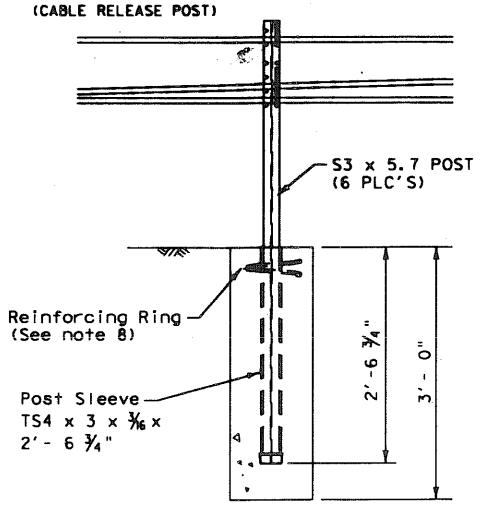

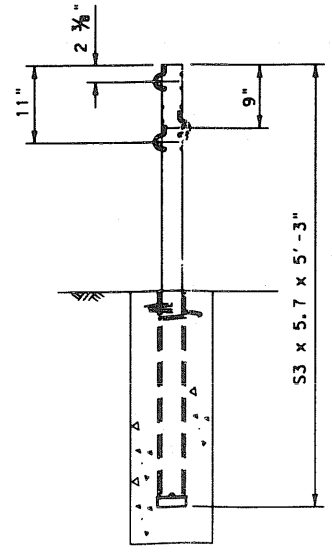

DETAIL B

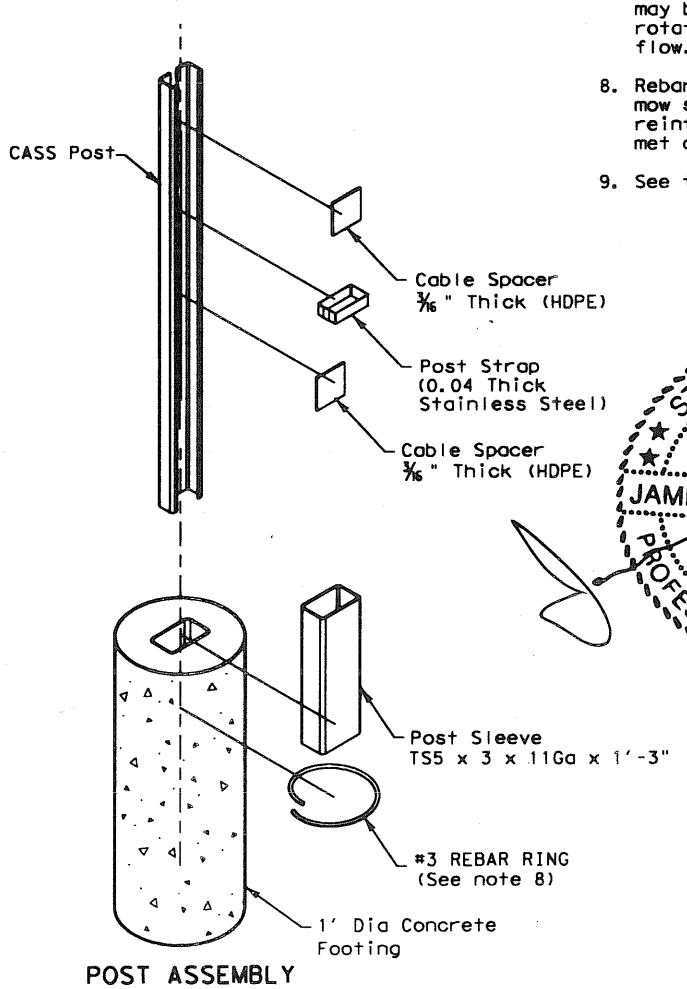

POST ASSEMBLY

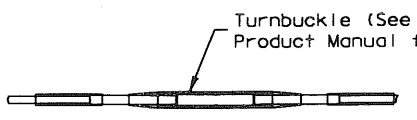

DETAIL F

GENERAL NOTES

1. For additional information, contact Trinity Industries, Inc. at 1-800-527-6050.
2. All concrete shall be class C.
3. For cable barrier installation lengths and terminal cable (CCT) requirements. (See the manufacturer's product manual)
4. For payment see special specification "Cable Barrier System".
5. The CASS system is designed for bi-directional traffic flows. See the manufacturer's product manual for placement adjacent to guardrail end treatments.
6. CASS shall be installed on median shoulders or in depressed medians with slopes of 6:1 or flatter without obstructions, depressions, etc. that may significantly affect the stability of an errant vehicle.
7. CASS may be installed on either side of the median. CASS post may be socketed or driven design and shall be alternately rotated 180 degrees so that every other post is facing traffic flow.
8. Rebar ring is not required if installed in a 3 ft. (min.) width mow strip of 8 in. (min.) asphalt depth or 4 in. (min.) reinforced concrete depth. If minimum requirements are not met contact Trinity Industries to discuss footings.
9. See the Texas MUTCD for proper delineation.

CABLE TENSION CHART	
F	lbf
-11	7329
0	6969
10	6609
21	6250
32	5912
43	5553
54	5193
64	4833
79	4361
93	3867
104	3530

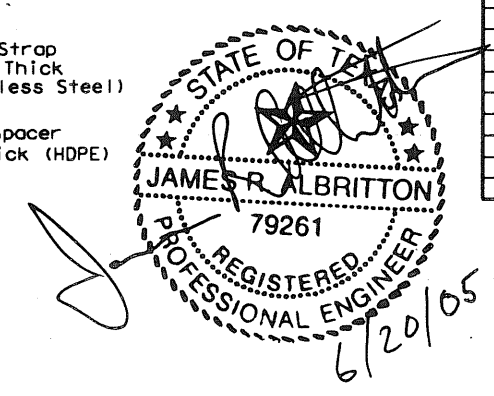

CABLE SAFETY SYSTEM

(Trinity Industries Inc.)

DISCLAIMER:
The use of this standard is governed by the "Texas Engineering Practice Act". No warranty of any kind is made by TxDOT for any purpose whatsoever. TxDOT assumes no responsibility for the conversion of this standard to other formats or for incorrect results or damages resulting from its use.

FILE:	DN:	CK:	DW:	CK:	
	DISTRICT	FEDERAL AID PROJECT			SHEET
REVISIONS	FTW				22
△ REVISED 6-28-05	COUNTY	CONTROL	SECT	JOB	HIGHWAY
	PARKER	0314	07	032	IH20

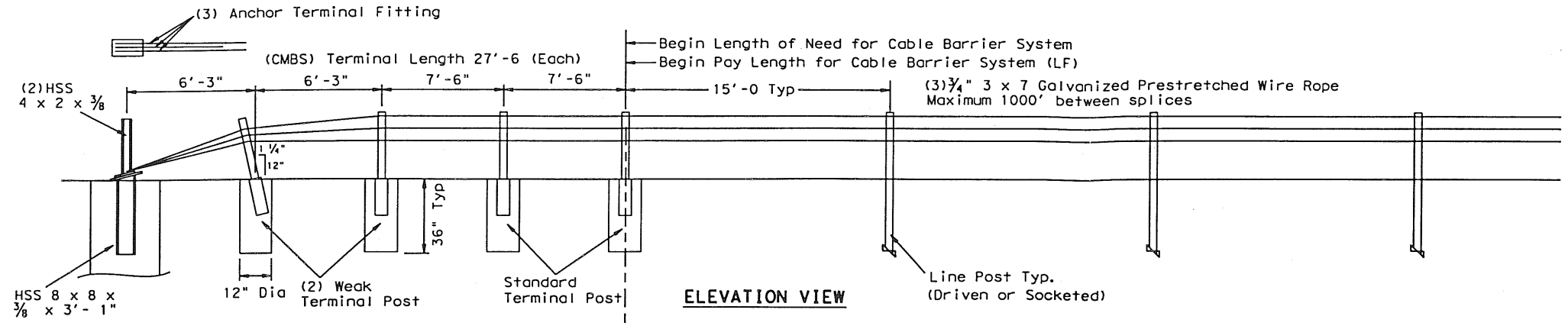

ELEVATION VIEW

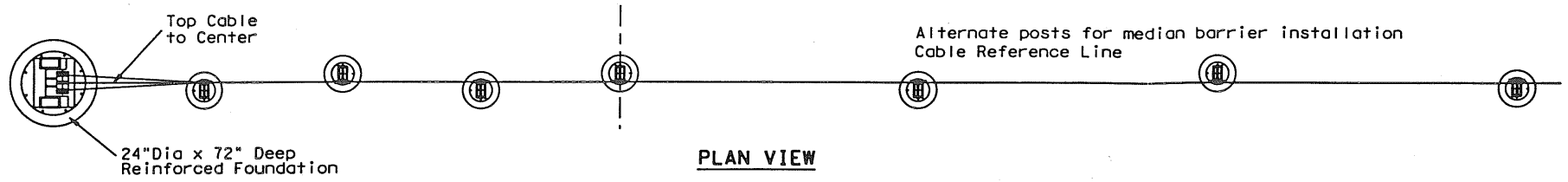

PLAN VIEW

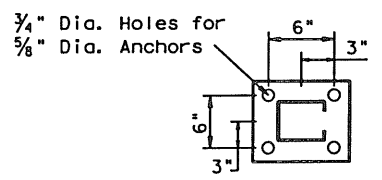

For Use On Concrete
5/8" Mechanical Anchor
Min. Pullout Strength 10,000 lbs.

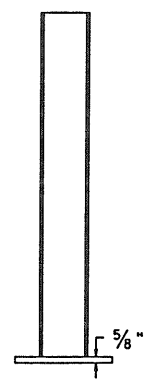

BASE-PLATED POST

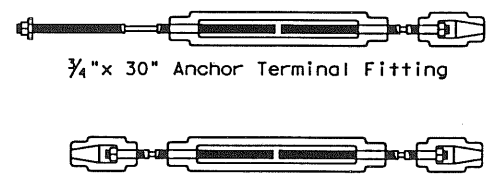

TURNBUCKLES

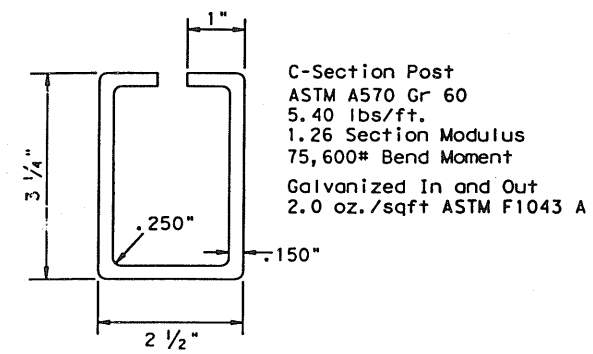

C-SECTION POST

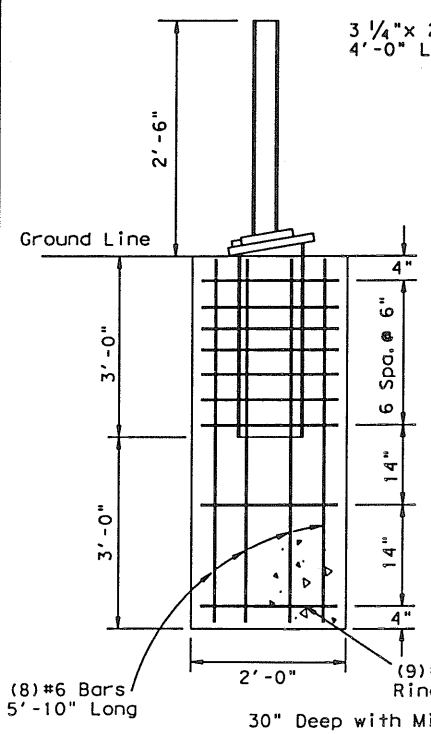

CABLE RELEASE POST

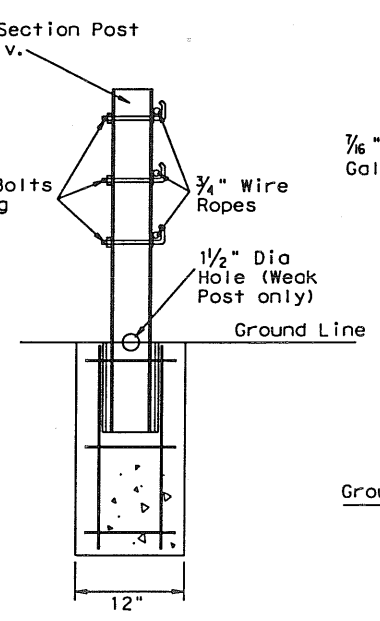

TERMINAL POST

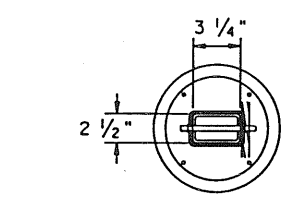

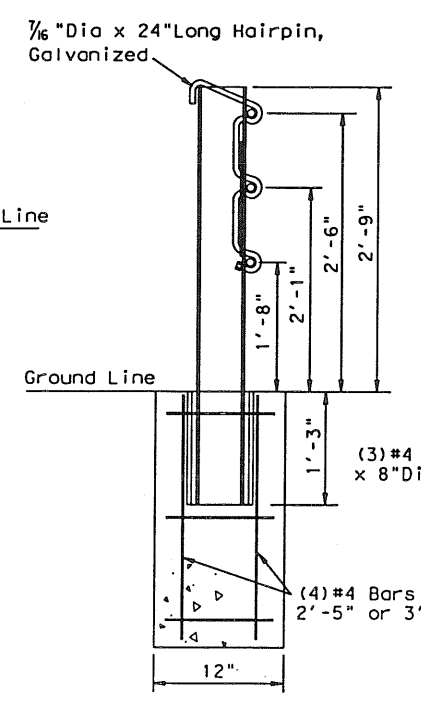

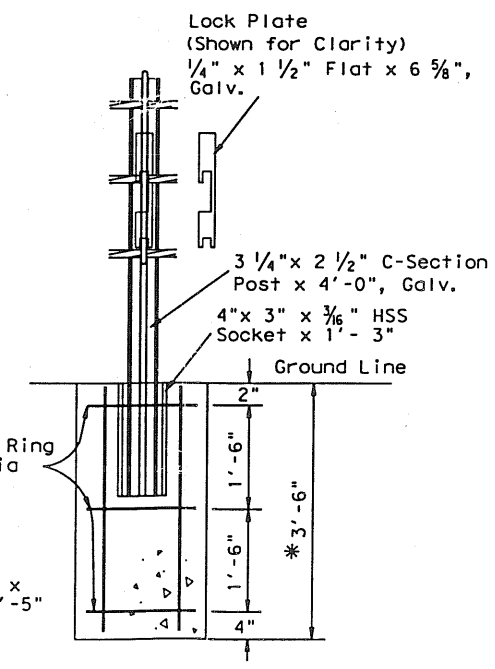

SOCKETED POST OPTION
(TYPE S POST)
*If a Mow Strip is used the socket depth may be decreased to 2'-6".

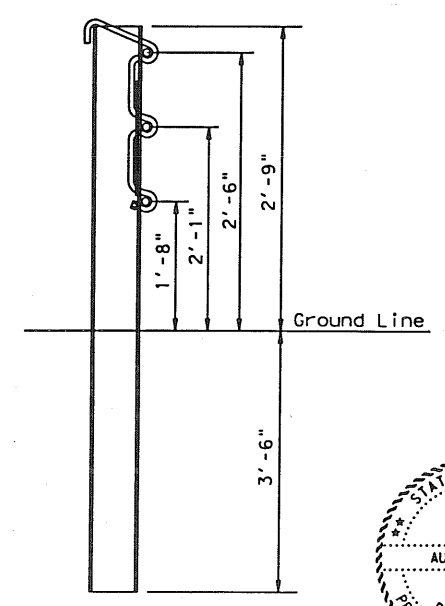

DRIVEN POST OPTION
(TYPE D POST)

GENERAL NOTES

1. For additional information, contact Gibaltar, Inc. at 1-800-495-8957.
2. All concrete shall be class C.
3. For additional information: See the manufacturer's product manual.
4. For payment see special specification "Cable Barrier System".
5. The GCBS system is designed for bi-directional traffic flows. See the manufacturer's product manual for placement adjacent to guardrail end treatments.
6. GCBS shall be installed on median shoulders or in depressed medians with slopes of 6:1 or flatter without obstructions, depressions, etc. that may significantly affect the stability of an errant vehicle.
7. GCBS may be installed on either side of the median. Post may be socketed or driven design.
8. See the Texas MUTCD for proper delineation.

CABLE TENSION CHART	
F	lbf
-10	8210
0	7819
10	7447
20	7069
30	6677
40	6301
50	5928
60	5536
70	5155
80	4773
90	4390
100	4009
110	3627

DISCLAIMER:
The use of this standard is governed by the "Texas Engineering Practice Act". No warranty of any kind is made by TxDOT for any purpose whatsoever. TxDOT assumes no responsibility for the conversion of this standard to other formats or for incorrect results or damages resulting from its use.

STATE OF TEXAS
AURORA MEZA
66201
REGISTERED PROFESSIONAL ENGINEER

Aurora Meza, P.E.
6/27/05

GIBRALTAR CABLE BARRIER SYSTEM
(Gibraltar Inc.)

ΔADDED 6.28.05

FILE:	DN:	CK:	DW:	CK:	
	DISTRICT	FEDERAL AID PROJECT			SHEET
REVISIONS	FTW				22A
	COUNTY	CONTROL	SECT	JOB	HIGHWAY
	PARKER	034	07	032	IH 20