SPECIAL SECTION

# Driver Distraction From a Control Theory Perspective

**Thomas B. Sheridan,** Volpe National Transportation Systems Center, Cambridge, Massachusetts

Distraction from cell phones, navigation systems, information/entertainment systems, and other driver-interactive devices now finding their way into the highway vehicles is a serious national safety concern. However, driver distraction is neither well defined nor well understood. In an effort to bring some better definition to the problem, a framework is proposed based on the ideas of control theory. Loci and causes of distraction are represented as disturbances to various functional elements of a control loop involving driver intending (goal setting), sensing, deciding on control response, dynamics of the vehicle, and human body activation and energetics. It is argued that activation should be classed separately from the other functions. Attention switching from environmental observation/control to internal device manipulation is modeled as sampled-data control. Also fit within the control framework are mental modeling and anticipation of events in the driver's preview. The control framework is shown to suggest some salient research questions and experiments. Actual or potential applications of this research include a refined understanding of driver distraction and better modeling and prediction of driving performance as a function of vehicle and highway design.

## INTRODUCTION

### The Problem and the Approach

Driver distraction as a research topic is currently popular, for good reason. Automobiles and trucks are undergoing large changes in terms of the new sensor, computer, and communication technology they incorporate. As part of this change within the industry, there is now momentum to add driver-interactive information technology (IT) to the vehicle. This is not only to increase safety and make vehicle control more reliable (so-called safety-enhancing technology) but also to entertain the driver and passengers on long trips or traffic-snarled commutes and to provide an increased capability to do work other than driving the vehicle. The concern is whether such technology compromises safety. Cell telephone communication is now extensive, and E-mail and other forms of computer interaction are not far behind. So the current concern for the safety impacts of driver distraction attributable to new IT devices is not an imagined problem: It is real. Both crash data and experimental research have already pointed to the evidence.

But what *is* driver distraction, and how well is it understood? This paper develops a definition of driver distraction, discusses its elements from the viewpoint of control engineering, and offers a framework for analysis.

Distraction of the human controller of a highway vehicle is regarded as a disturbance at various points in a classical feedback loop representation of control of a vehicle. The type and locus of the disturbance are determiners of the vehicle response, as are the frequency and duration of attention away from the driving task. Operationally, if there is no effect of distraction on control, there is no distraction.

I start with a continuous classical control model. The relevance of some advanced control concepts, such as discrete sampling, preview, and internal modeling, are then related to the sensory and cognitive aspects of distraction.

No claim is made that this framework will fill all needs. Rather, it is suggested as an alternative that emphasizes the dynamics of driving

Address correspondence to Thomas B. Sheridan, 32 Sewall St., Newton, MA 02465; sheridan@mit.edu. **HUMAN FACTORS,** Vol. 46, No. 4, Winter 2004, pp. 587–599.

Downloaded from hfs.sagepub.com at MASSACHUSETTS INST OF TECH on August 12, 2010

performance as a function of particular attributes of distraction. However, unlike several complex qualitative models of distraction causality and effects on performance, the proposed control model is sufficiently simple and explicit to have a degree of predictive capability.

Many terms are currently in use by human factors practitioners to refer to aspects of human behavior in controlling a vehicle or process, and most seem somehow related to distraction. Some are older terms from psychology, such as *attention.* Others are newer and currently in vogue, such as *mental workload* and *situation awareness.* This report seeks to interrelate several such relevant terms in the vehicle driving distraction context.

## Background of Driver Distraction

Driver distraction is currently attracting considerable attention in the highway safety research community (Anderson, Abdalla, Pomietto, Goldberg, & Clement, 2001; Cole & Hughes, 1988). Vehicle crash databases have revealed much information pointing to the negative effects of distraction on safety. Wang, Knipling, and Goodman (1996) estimated from government crash databases that 12% of crashes involve what they called *distraction* and 9% were in a category called *looked but did not see.* Stutts, Reinfurt, Staplin, and Rodgman (2001) reviewed the same databases 5 years later and estimated that 49% of drivers in crashes had been inattentive, of which 8% were distracted and 5% looked but did not see. (The numerical differences may be attributable to differences in subjective interpretation of data.)

Eye movement measurement is probably the most popular way to measure distraction (Liu & Pentland, 1997). Other studies have explicitly looked at side tasks within the vehicle (Hancock, 1999; Horrey & Wickens, 2002; Lee, Caven, Haake, & Brown, 2001; Lee, McGehee, Brown, & Reyes, 2002). The National Highway Traffic Safety Administration (NHTSA) has sponsored several national forums on the topic of driver distraction (Llaneras, 2000).

Some terms found in the literature seem to relate to driver distraction positively and some negatively. For example, *attention, alertness, vigilance, focus,* and *situation awareness* are positive, whereas *mental load, stress, fatigue,* and *drowsiness* are negative. None of these terms means the same thing as another; there are connotations that are different but subtle. It is tacitly assumed that the reader of papers in the literature understands the meaning of these terms, but meetings on the topic evidence confusion and lack of operational definition. Continuing efforts are needed to clarify their meanings and discriminate among them.

*Attention* and *focus* are the two terms that have been most closely associated with distraction. M. Goodman (personal communication, 2002) contends that there can be many taxonomies, so to seek universal acceptance on one taxonomy or definition may be fruitless: It is sufficient to operationally define distraction in the context of a particular study. The National Highway Traffic Safety Administration (NHTSA) has sometimes found it convenient to separate distraction attributable to fatigue, drowsiness, or sleepiness from the "looked but did not see" phenomenon in partitioning crash data.

Let *driver distraction* be defined as a process or condition that draws away driver attention, thereby disturbing driving control. Justification for such a definition might be found in the *Webster's Third New International Dictionary* (1965) definition: from the Latin *dis* (apart) + *trahere* (draw or pull), "to draw or cause to turn away from an original position, goal, purpose, direction, association or interest." Webster's listed synonyms are *divide, separate, harass,* and *confound. Roget's International Thesaurus* (1977) lists other synonyms: *discompose, disincline, divert.* From the Fernald (1947) book of synonyms the terms *disturb, perturb, remove, detach, steal, withdraw, purloin,* and *confuse* can be added. All of these terms imply compromise in safety and also connote what disturbance means to a control engineer, in terms of its effect on system performance.

Current research in driver distraction essentially looks at an array of factors that are lumped together as distractors because they result in diminished driving performance (and bring the vehicle closer to collision with other vehicles, roadside objects, or pedestrians). Eye movements and braking/steering response are currently regarded as the "gold standard" of distraction-dependent measures of system performance.

Downloaded from hfs.sagepub.com at MASSACHUSETTS INST OF TECH on August 12, 2010

## A CONTROL THEORY FRAMEWORK OF MINIMAL FUNCTIONAL ELEMENTS

The framework suggested for considering driver distraction is that of the conventional control loop; see Figure 1.

The idea of a control model is not new to driving research. The continuous functions of lane and headway keeping have long been modeled using dynamic models (Allen, Rosenthal, Aponso, et al., 1998; Allen, Rosenthal, & Christos, 1998; Levison, 1993, 1998). Discrete maneuvers, although obviously differing from lane keeping, have long been recognized as subsuming continuous control (Michon, 1993). Computer algorithm-based models have also been applied to driving (Anderson & Lebiere, 1998). Jagacinski and Flach (2003) provided an introductory text in control aimed at nonengineers.

Figure 1 shows five blocks of the proposed model designated by boldface letters:

1. The intending block, **I,** generates a priority-ordered sequence of near-term driving goals: a time variable I (whether safe or foolishly unsafe, and on whatever time scale is convenient) to follow a given lane, maintain a certain speed, maintain a certain distance behind a lead car, pass, perform a turning maneuver, and so forth. I constitutes the "original position" in Webster's definition of distraction. One can assume that no matter what additional tasks the driver undertakes while driving, the basic intention remains to drive safely. I* represents a driving goal modification, such as a sudden demand to make a right turn from a left lane or to return home because something was forgotten. It is shown dashed in the figure because (as is implied later) such an input cannot be treated as a small perturbation in a continuous stream of signals but, rather, amounts to reprogramming. Driver actions to tune the radio, get navigation information, make a cell phone call, eat a sandwich, or carry on a discussion with a passenger are regarded as disturbances not to **I** but to other blocks. The Intention block also includes the criteria (trade-off or objective function) for reordering the driving goals, based on observation and prediction of environmental events. This

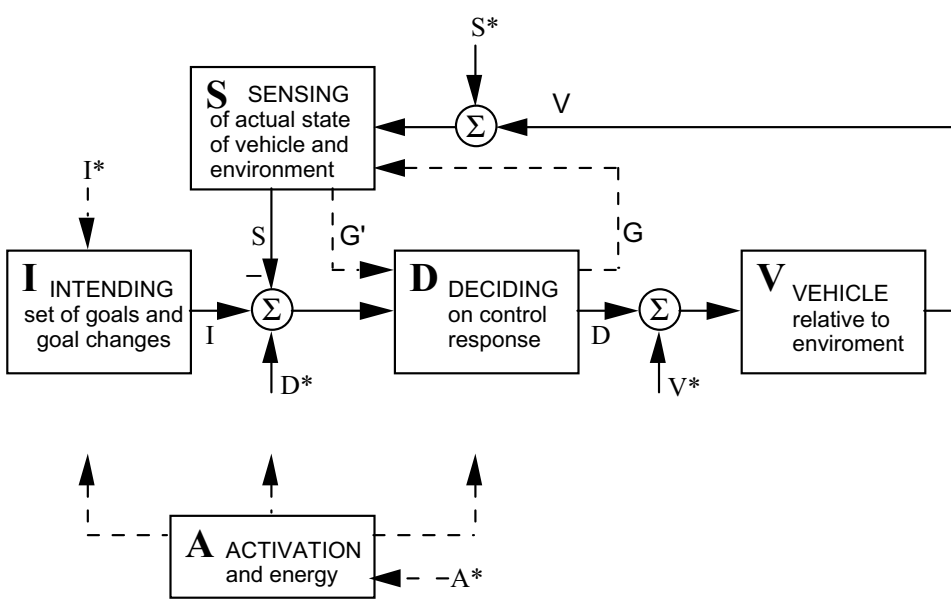


*Figure 1.* The functions essential for safe driving as elements of a control system. Blocks **I, S,** and **D** (in boldface) represent input-output transfer functions of the active human driver. I, S, and D represent their corresponding output variables (vectors of several components). I*, S*, and D* represent their corresponding disturbance (distraction) variables. The output V of the vehicle (relative to the environment) is the system state, and the disturbance to the vehicle is V*. G and G′ represent the secondary motor loop necessary to control sensor orientation. The block **A** represents the human body's mechanisms to effect activation (alertness, energy) with corresponding disturbance A*.

Downloaded from hfs.sagepub.com at MASSACHUSETTS INST OF TECH on August 12, 2010

block provides an independent input to the deciding block, **D,** and thence to the remainder of the control loop.

2. The sensing block, **S,** represents all of what the nervous system does (through visual, auditory, or tactile receptors) to extract information from its environment about the current situation in relation to the intention. This block is also shown as being in an inner closed loop, GG′, to direct the head and eye muscles to point the eye gaze and to focus in particular directions. This loop can also command the head to turn to provide the ears best access or the hands and feet to enable desired tactile access. These sensors in turn send to **D** what they garner from the environment (i.e., the previewed "situation" S). Some zone of previewed situation awareness is assumed (depicted in Figure 2) that allows **D** to set the appropriate vehicle course. Sheridan (1970) has proposed algorithms for how such preview might operate. S* represents various external disturbances to sensing, such as visual masking (e.g., glare, dirty windshield), external visual distractions by the roadway, and visual attention demanded to interior objects (the car radio, navigation system displays, a dropped object, a passenger question, etc.), as well as auditory masking that prevents awareness of engine speed or auditory warnings.

3. The deciding block, **D,** represents the cognitive processing of salient sensed information S relative to intentions I, to determine what action to take on the steering wheel or foot controls to control the vehicle. In a control approach more advanced than the initial "classical" or "error-nulling" control model, this block incorporates a mental model capable of predicting near-future states of the vehicle relative to observed environmental events. How that functions will be described in more detail. The **D** block also includes extraneous mental tasks that may preoccupy the driver based on disturbances D*, including mental workload of coping with internal devices (e.g., cell phone use, passenger conversations).

4. The vehicle block, **V,** represents the physical dynamics of the vehicle relative to the roadway environment. **V** might also include the passive mechanical dynamics of the driver's limbs being positioned to operate the vehicle controls. V* represents those driver limb control actions or the assumption of body positions required, for example, to tune the radio, manipulate a sandwich, or deal with a child, which disturb or constrain the driver's ability to steer and brake.

5. The activation block, **A,** represents the biochemical and neurological functions necessary to maintain the body, especially the nervous system, to keep it awake, alert, motivated, and healthy. A* represents extraneous disturbances to this functioning, with the dotted line representing operation with long time constants the same as I*.

It seems safe to assert that these five blocks constitute a set of mutually exclusive and collectively exhaustive elements to characterize human control of a machine or environmental object. Now consider the properties of a control perspective that make it attractive as a framework for driver distraction research.

## MODEL PROPERTIES USEFUL FOR DRIVER DISTRACTION RESEARCH

The most commonly accepted dependent variable for driver distraction research is vehicle

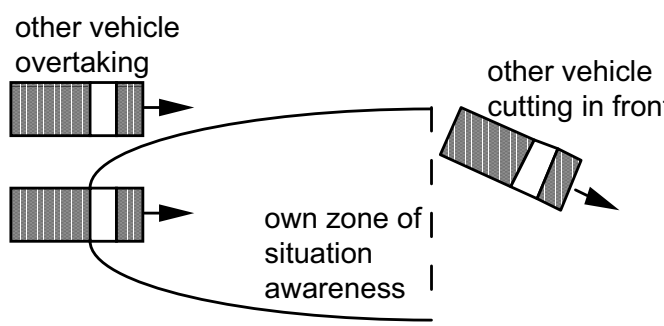


*Figure 2.* Assumed zone of situation awareness.

Downloaded from hfs.sagepub.com at MASSACHUSETTS INST OF TECH on August 12, 2010

performance (braking and steering) relative to the roadway environment, and the same is true with the control model. Control performance is usually categorized into (a) transient response (time to regain ideal target tracking, bias or offset, and overshoot) and (b) continuous or steady-state response (tracking error, bias, undesirable oscillations, and instability).

These dependent variable properties are a function of the gains (sensitivity) from input to output of each block, the time delays of signals passing through each block, and whether the process is continuous in time or discontinuous (sampled at discrete intervals). These properties have counterparts in the driver distraction context.

The first approximation to any control model of a dynamic process is linearity, and for many simple sensory motor tasks, especially where there are continual small changes in stimulus and response (lane and headway tracking), the linear model has been shown to account for more than 90% of the variability (Sheridan & Ferrell, 1974). Figure 3 shows a conventional closed control loop, where forward loop **A** and feedback loop **B** may both have properties of gain, time delay, and sampling. In general, dynamic properties are such that the gain changes (it usually diminishes) as frequency increases. If the forward gain of **A** is large, the feedback measurement **B** is good (close to gain of one), and the **AB** combined delay is nil, then output A tracks the reference input R almost perfectly. That also means that if R input is a disturbance, then that disturbance will show up in the output. Further, if at any frequency the delay causes a 180° phase lag of the output relative to the input and the combined **AB** gain exceeds one, the loop goes unstable. In such a case, what is normally negative feedback becomes positive feedback. Then any energy that gets into such a loop will be reinforced each time around the loop and will increase without bound. This is the classic definition of *instability.*

Such instability can occur when reaction times in **D** are long. For example, DeFerrari (1961) showed that in highway driving after 24 hr of sleep deprivation with a transient V* disturbance experimentally added to the steering system (to simulate a wind gust), the drivers' reaction times increased and so did their control gains, predictably causing violent and semiunstable steering.

Vehicle response to a disturbance introduced at various points in the loop of Figure 1 will differ, depending on where the disturbance is introduced. The resultant response will be determined by the transfer functions at the right of Figure 3. **S** embodies both position and rate sensitivity and to a first approximation is $1 + K_s\mathbf{s}$, where $K_s$ is the rate sensitivity coefficient and **s** is the Laplace transform operator signifying time derivative. Similarly, **D** can be approximated as a simple coefficient $K_d$. However, it should be noted that $K_d$ is the one parameter that has been shown to be adaptive (i.e., it can be adjusted by the driver to provide the best dynamic response; Sheridan, 1961). Finally, **V** can be approximated as either $K_v/\mathbf{s}^2$, a double integration (steering wheel position to vehicle lateral position), or $K_v/\mathbf{s}$, a single integration (accelerator pedal position to vehicle

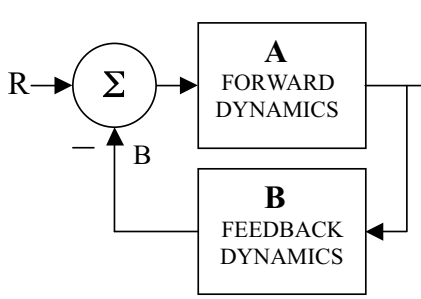


A=**A**(R-**B**A), so A= [**A** / (1+**AB**)] R

Similarly:

1) Vehicle response to S*: V = [**SDV** / (1+**SDV**] S*
2) Vehicle response to D*: V = [**DV** / (1+**SDV**)] D*
3) Vehicle response to V*: V = [**V** / (1+**SDV**)] V*

*Figure 3.* Classical control loop with linear dynamic elements (left). R is reference (independent) input. A is the system (dependent) output. Transfer function is shown at right (top), with implied transfer functions (1, 2, 3) for Figure 1 when neural delay τ is neglected.

Downloaded from hfs.sagepub.com at MASSACHUSETTS INST OF TECH on August 12, 2010

speed), where $K_v$ is the integration rate coefficient characteristic of the vehicle steering system in the first case or acceleration in the second case. Thus for steering **SDV** is approximately $(1 + K_s\mathbf{s})K_dK_v/\mathbf{s}^2$. (To model human control, a pure time delay $\tau$, in Laplace notation $\exp[-\tau\mathbf{s}]$, is usually added to account for the refractory period of the nervous system).

From algebraic transform manipulations one can derive that the closed loop denominator of Equations 1, 2, and 3 in Figure 3 are second order, meaning that there can be oscillations in vehicle response with damping increasing as $K_s/K_dK_v$ increases. With sufficient damping or after an oscillatory transient dies out, the steady-state transfer functions can be shown to be (a) $V/S^* = (1 + K_s\mathbf{s})$, (b) $V/D^* = 1$, and (c) $V/V^* = (1/K_d)$, respectively. This implies that a sudden $S^*$ disturbance will show up in vehicle response amplified both by its suddenness and by rate sensitivity $K_s$. A disturbance $D^*$ will be manifest in vehicle response as though it were an intention. The effect of a $V^*$ disturbance on vehicle response will be reduced as $K_d$ increases.

These results mean that erratic driver behavior will produce the most erratic vehicle response when the vehicle has small mass and sensitive (high-gain) steering, less when the vehicle is large and the steering more sluggish. All three closed-loop transfer functions approach infinity (instability) when combined loop delay is such that **AB** (or **SDV**) approaches –1. The lack of vestibular cues in fixed-base driving simulators means that **D** lacks the first and second time derivative information necessary to anticipate, resulting in the familiar lane-tracking overshoot problem.

In classical control only the current goal state (e.g., where the vehicle is now) is given, and although time derivatives can be calculated there is no capability to preview actual future input goal states. More "intelligent" control systems (e.g., for autonomous vehicles or robots as well as drivers) have sensors that can not only sense time derivatives but also actually look ahead to upcoming pathways or obstacles and make anticipatory control responses. Goal states are ordered based on "if-then" rules in the computer controller and known vehicle dynamics. (No human dares to drive a vehicle while looking at the road edge alongside the vehicle and not looking ahead.) Such look-ahead control is called "preview control." Preview enables the driver to plan, before actually starting, an ideal reference trajectory (set of intentions). For example, in a passing maneuver a trade-off is necessary between allowing room to pass the lead vehicle and getting back in the lane in time to avoid an oncoming vehicle. Such a preview maneuver can be modeled by various optimization techniques, such as dynamic programming (Sheridan, 1966). The farther ahead the driver can preview, the smoother the response (up to a point of no further advantage).

## ATTENDING TO NONDRIVING TASKS AS CONTROL DISTURBANCE

For single tasks requiring coordination of sensors and limbs, the multiplicity of sensory control loops (both gaze and head motion) and of limb control loops (hands on the steering wheel and feet on the pedals) causes no problem. We humans have evolved the ability to control our external sensors and our limbs in a coordinated fashion, as is abundantly evident in watching any athlete and is well established in the human control literature (Sheridan & Ferrell, 1974). However, the competition of sensory and motor resources for multiple simultaneous unrelated tasks (driving plus other tasks extraneous to driving) does pose a problem, and that of course is what driving distraction research is about.

The notion of being able to attend to but one thing at a time, in psychology called the *single channel hypothesis* (Welford, 1952), is controversial. Meyer and Kieras (1997) and Pashler (1998) have reviewed the various theories surrounding this idea. For simple and well-learned tasks that do not overlap common sensory, motor, or cognitive resources (e.g., walking and chewing gum), doing both tasks simultaneously is obviously easy, whereas for complex tasks in which these resources do conflict, there is evident interference and even breakdown. Wickens (1984, 2002) has dealt with this problem in terms of whether or not limited sensory, cognitive, and motor resources are in competition.

When the same resources are in competition, the simplest assumption for change between driving and nondriving tasks is that when

Downloaded from hfs.sagepub.com at MASSACHUSETTS INST OF TECH on August 12, 2010

appropriate criteria are met for one task, the driver makes a clean switch of sensing or deciding resources (or both) to the other task, allowing the one "not connected" to be unattended for some short period. This is represented in Figure 4 as a switch (a substitution) of **S** and/or **D** from the vehicle or "driving" block on the right of Figure 4 to the "nondriving" block. The switch logic is presumably effected by additional cognitive capability of the D block plus the GG′ control coordination with sensing in Figure 1.

Thus it would appear that if the vehicle is well under control and no conflict is predicted from the look-ahead, a goal of "tune radio" may be bumped to top priority and the vehicle control loops will be opened briefly. (It is not claimed that the control framework models this switching logic.) If a hazard is predicted, or if sufficient time has elapsed by the criteria of the intention, another goal (e.g., car-following) may bump back to top priority and vehicle control loops will be reclosed.

In control theory there are several ways to model this phenomenon of switching or loop-opening process. From a preview control perspective, ignoring the preview for some time interval is equivalent to a transient disturbance, in which S* cancels V for some period and the best D can do is hold the last input as a constant until the sensory connection is reestablished, producing a transient response. Because this is equivalent to opening the feedback loop from V, the resulting "blind" open-loop control through D and V could easily drive the vehicle off the road or produce an inappropriate speed, leading to a crash.

Several authors have tackled this attention allocation problem as a problem in sampling strategy (Kahneman, 1973). A somewhat intuitive notion is that the frequency of sampling of each of two or more dynamic processes should be proportional to the bandwidth (maximum speed of change) of that process, provided each is of equal importance. This can be proven easily, as can the fact that sampling at a rate greater than once for every half cycle of the highest frequency (the Nyquist interval) is pointless: All the information is there. Senders (1964) showed that people do tend to follow this sampling rule for sharing observations between well-known processes. Sheridan (1970) suggested an algorithm for optimizing sampling based on the relative costs of error for each process and the mental effort cost of taking the sample. A serious problem concerns sampling in the case of events or processes with unknown (i.e., unpredictable) bandwidths.

Whether a particular distraction actually diminishes safety to any measurable extent clearly depends on the switching criteria and sampling strategy (period and frequency) as well as on unexpected events that occur when attention is not on driving. Intentional sampling rate increases with speed and traffic density and decreases with lane width, as shown by the Senders, Kristofferson, Levison, Dietrich, and Ward (1967) experiments in which the driver controlled speed in actual highway driving while regular visual sampling opportunities were paced voluntarily by a helmet occlusion device. Mourant and Ge (1997) and Courage, Milgram, and Smiley (2000) got similar results using liquid crystal occlusion in eye glasses. Wierwille (1993) proposed a model of driver visual sampling in which the driver starts with a 1-s sample and evaluates the situation; then, if the driver decides it is safe, he or she lengthens the same sample to 1.5 s and then returns to forward view. The implication is that periodic sampling can be safe if the statistics of the stimuli are

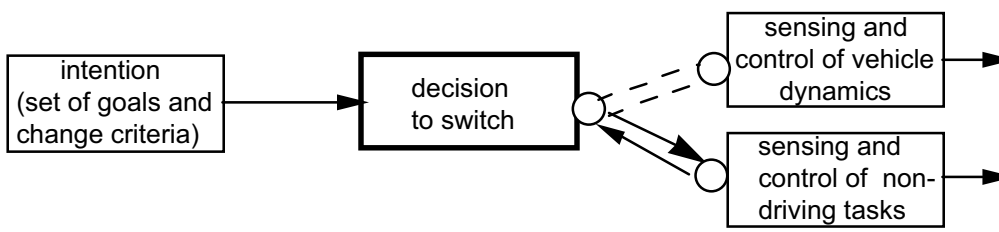


*Figure 4.* The switch of attention between driving and nondriving tasks.

Downloaded from hfs.sagepub.com at MASSACHUSETTS INST OF TECH on August 12, 2010

regular or at least well known, but sudden, unexpected events do happen in driving that make visual sampling risky.

The foregoing discussion treats distraction as an exogenous time variable or, equivalently, as a sampling disruption but does not apply the control model to the distracting task itself. Clearly, diversion of the gaze away from the road to something internal to the vehicle, movement of the limbs to operate internal devices, control of speech in conversation over a cell phone or with a passenger, and even cognitive "running of mental models" could all be treated as some form of feedback control. The difficulty is that these activities are very complex, surely not linear, and hardly amenable to the simple model that has been shown to be feasible for lateral and longitudinal control of the vehicle. Treating the distraction as a disturbance seems much more straightforward. However, examination of control performance on the "distracting" task might well be the subject of future research.

## FURTHER IMPLICATIONS FOR RESEARCH

### Experiments on Intending, Sensing, and Their Coupling

It is important to consider that the intention variable I and the sensing variable S are both inputs to the control decision block **D.** The difference is that I is willed (voluntary) whereas S is not – the latter is the best available measure of reality, at least in classical "error-nulling" control. (In the next section an extension of classical control is described involving use of an internal model to combine what one sees happening with what one expects to happen based on immediate past control actions.)

How can intention and sensing interact? A sudden change of intention (e.g., lane change) without sufficient consideration to sensing (e.g., of an overtaking vehicle in the new lane) produces an instant (I – S) error and is a recipe for disaster. The effects of impulsive intention changes are not so different from sudden sensing changes (e.g., dirt splashed on the windshield, blocking the driver's view). If the driver imposes an intention change (e.g., assume a lane change to the right) at the same time a sudden problem occurs with sensing (e.g., the discovery that the right mirror is set incorrectly so that one cannot detect an overtaking vehicle), that clearly compounds the problem. Visual preoccupation by the driver with some nondriving task within or even outside the vehicle can similarly exacerbate an intention change. The history of accidents is fraught with situations in which more than one requisite condition went unfulfilled, making recovery with respect to any one condition virtually impossible. Reason (1990) is credited with the "Swiss cheese" metaphor, in which each slice in a stack of slices represents a different defense against failure, and if the holes in each slice line up with those in the other slices, failure is a foregone conclusion. The control model therefore suggests that research is needed in a variety of scenarios on the problem of sensory overload concurrent with intention change.

Although intending is necessarily willed by the driver (or at least voluntarily complied with if a back-seat driver is calling the shots, this being one form of I*), what the senses sense in real driving is partly controlled by the driver and partly not. Numerous studies have shown that vision, hearing, and touch sensors cannot ignore sudden and unexpected changes in the stimulus, whatever their relevance to the original task. For example, Landry, Sheridan, and Yufik (2001) showed that air traffic controllers could not help but look at radar images of aircraft that formed patterns or gestalts, even though those aircraft, by virtue of their location on the screen, were irrelevant to the task. Unexpected patterned stimuli can easily "grab" attention. Similarly, in all sensory modalities, sustained "noise" stimuli of sufficient magnitude are disturbances that will mask perception of patterns that the human is trying to observe. By contrast, expected and irrelevant stimuli can be ignored while the driver focuses on sampling the road ahead. Research should examine the degree to which voluntary and involuntary attention to nondriving events differ in their effects: The simple control model would suggest that they may not, unless the voluntary attention is different by virtue of preview (or preconsideration, or lead time to plan).

### Insights From Optimal Control About Relevant Cognition

The control decision (**D**) block might give

Downloaded from hfs.sagepub.com at MASSACHUSETTS INST OF TECH on August 12, 2010

further hints of what is important to driver distraction. It can be said that this block represents driver "cognition," but that is of little help because of the imprecision surrounding the term. However, by looking inside the counterpart computer controller block in an automatic control system (Figure 5), one does get some hints, if *computer controller* is allowed to mean "optimal" or "modern" control, as it is commonly meant in the control engineering literature and commonly distinguished from simple error-nulling control. Optimal control has been used to model human control in the work of relatively few authors, such as Kleinman, Baron, and Levison (1970) for airplane pilots, Kok and Stassen (1980) for ship helmsmen, and Levison (1993, 1998) for drivers. Models in the cited references come closer to what cognition must include: an internal (mental) model and the capability to improve the model based on past results.

The optimal controller works as follows: If the state V (all the variables salient to the current performance, including predicted conflicts) were known perfectly, along with I (the currently operative goal sequence), a perfect decision could be made of what control commands to send out. Here I will not get into the mathematics of decision calculations relative to tractable objective functions (available in books on optimal control and decision theory). What is more important for now is that V cannot be known perfectly, either in automatic or in human-controlled systems such as highway vehicles, because of imperfect sensing, imperfect prediction, and the inability to keep track of everything (surely a key problem in driver distraction). So a best estimate of V is determined as shown in Figure 5.

The optimal control technique makes use of a predictive internal modeling approach invented by Kalman (1960) and now known as an *observer.* It makes use of both direct (but imperfect) measurement and extrapolation from a model (also imperfect) of the system being controlled (e.g., the vehicle in its environment). It says, "If I cannot get all the necessary information about V from my sensors, it would help to input my current commands to both an internal model of the controlled system as well as the actual controlled system and compare the results." (Utilizing an internal model with intermittent sensory updates, called "dead reckoning," is what a blind person must do to walk from one haptic position measurement to another.) This is because the internal model itself is bound to be imperfect, so it is wise to also have an internal model of the measurement (sensing) $V_{est}$ including expected delay and noise, and then compare the result $S_{est}$ to the actual sensor output S. For then, insofar as there is any

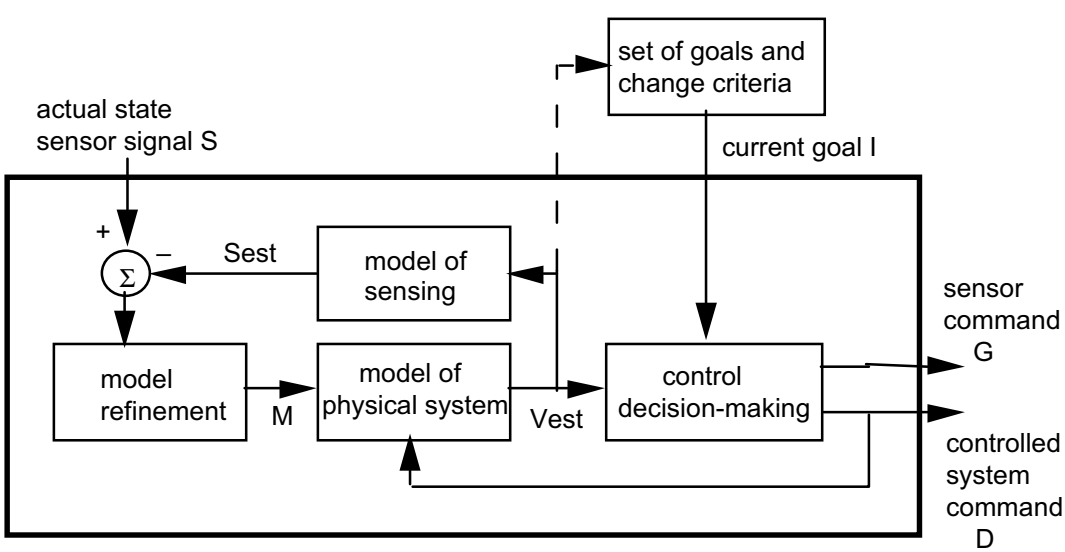


*Figure 5.* What goes on inside an optimal controller.

Downloaded from hfs.sagepub.com at MASSACHUSETTS INST OF TECH on August 12, 2010

discrepancy (what is predicted to happen does not actually happen), one can continually refine (through modification M) the physical system model.

This technique – combining feedback control with dead reckoning – has been proven mathematically to be the best that can be done, making use of both actual data from the environment and model-based prediction, with an internal model that is continually refined. It therefore is a reasonable norm for how human beings can or do combine sensed data and mental model extrapolations of their own actions. It goes well beyond the simple instantaneous-error-nulling feedback of classical control.

What insights can be gleaned from the inner workings of the optimal controller relative to driver distraction? The three model-related blocks on the left of Figure 5 have important implications when applied to human drivers dealing with potential distractors. Insofar as drivers cannot sample everything that is happening in the immediate surround and/or inside the vehicle, they must make assumptions and short-term predictions of what will happen before they get another sample. The internal (mental) model of sensing incorporates the driver's estimate of his or her own ability to see and hear what is important in spite of noise conditions that directly distract and therefore compromise this function. The internal model of the controlled physical system incorporates what the driver knows about how the vehicle will respond to command inputs. This block corresponds to what is usually referred to as a person's mental model.

The model refinement block represents how sensitive the driver is to new information and discrepancies from what he or she would have predicted in changing the controlled system model – in other words, what he or she learns about the task or situation. The variable M corresponds to situation awareness or, more accurately, its inverse. That is, if in the current situation the driver knows enough (has good enough internal representations) to make perfect predictions of the effects of control actions relative to the environment, it can be said that situation awareness is perfect, and $M = 0$. Insofar as any of these cognitive functions is disrupted by noise, stress, or mental activity unrelated to driving, the driver's attention, control, and, ultimately, safety will be reduced.

Note that the control decision-making block has two inputs and two outputs. The two outputs G (to control the sensors) and D (to control the vehicle) are two parts of the multidimensional control action vector. In the simplest (linear) case this output vector is an additive function of the two inputs $V_{est}$ and I. One can hypothesize that when the driver is in a learning mode, the internal model is continually changing and there is heavy dependence of $V_{est}$ on sensing of the actual state and less on exercising a fixed mental model to predict effects of D. Thus the novice driver will make many corrective steering motions in lane tracking. The overconfident novice driver whose mental model is not so good ($M \neq 0$) can be in real trouble as he or she attends to nondriving tasks for any significant period. The experienced driver, by contrast, may appear to respond directly to the intended goal (in so-called open-loop or feed-forward fashion), as though assuming M to be near zero and using a confident $V_{est}$ to exercise smooth control (e.g., in a turn) with hardly any steering reversals.

Human response sequences that seem "automatic," such as stair climbing or hard braking in emergencies, are characterized in this way. They seem not to involve conscious use of feedback signals (although surely at some low level of the nervous system there is feedback control going on). Such feed-forward control of learned behavior corresponds closely to what Rasmussen (1986) has called *skill-based behavior.*

It could be useful to study a driver's ability to predict the state of the highway environment after various "blind" time intervals (as though attention were diverted elsewhere for the period). This would give some idea of the driver's internal modeling capability, which is so important in maintaining control in safe driving while coping with other tasks for short periods.

## Relation of Distraction to Dynamics, Automation, and Automatic IT Mitigation

It has already been mentioned that different vehicles have different **V** steering and braking transfer functions and thereby affect performance differently, depending on where in the loop a disturbance (distraction) occurs.

Another property of vehicles not yet discussed

Downloaded from hfs.sagepub.com at MASSACHUSETTS INST OF TECH on August 12, 2010

is their ability to control themselves automatically (cruise control, adaptive cruse control, and optical lane tracking being examples). Presumably such newer vehicles would be more tolerant of long distraction intervals than are older ones. The downside, of course, is that drivers can be lulled into complacency and then be less attentive to unexpected events.

One purpose of driver distraction research is to devise systems that either warn the driver based on potential collision obstacles or attempt to mitigate distraction by cutting off the radio, cell phone, or other driver-interactive systems that may distract. One problem with these is that designs intended to be mitigating might actually cause more distraction by annoying and antagonizing the driver.

### Relation of Distraction to Activation

Drowsiness, fatigue, effects of drugs and alcohol, and illness are not being considered as "distraction" in this paper. However, these factors will certainly compromise activation of the brain and nervous system generally and will therefore adversely affect attention and driver control. These activation factors are phenomena sustained over time. They are not manifest as discrete events in a driving episode (although their symptoms such as head nods and eye blinks are). However, as noted earlier relative to the work of DeFerrari (1961), such factors tend to change the control parameters of gain and delay. This aspect has seen relatively little attention in driving research and deserves more.

### Relation of Distraction to Mental Workload

Mental workload is a cognitive phenomenon that everyone agrees exists, but is not easy to measure other than subjectively (Moray, 1988). Some researchers have questioned what driver distraction has in common with mental workload. To what extent are driver distraction and mental workload really the same? The question cannot be answered by treating either distraction or workload as one-dimensional variables. Wickens's (1984, 2002) research has shown that what distraction is depends on whether or not the sensory, cognitive, or motor resources demanded by driving are being compromised by diverting the same resources to nondriving tasks. If there is no such diversion, there may be no problem. However, as discussed by Lee et al. (2002), events that seemingly call for low workload (to just look at or hear) or no workload with respect to driving (because they are irrelevant to the driving task) can nevertheless be quite distracting. Examples are a sudden recollection or mental image or an irrelevant but very unexpected event outside the vehicle that "grabs" the driver's attention.

Unfortunately, in spite of much research effort, there are no consensually satisfactory measures of the mental workload involved in coping with such transient events beyond subjective report and task performance. (A major reason for studying mental workload is to predict task performance breakdown better than would a measure of task performance itself. Also, physiological indices and secondary task techniques demand sufficiently long samples and thus will not work for transient events.) Further, mental workload can be very high for driving in heavy traffic in unknown territory in bad weather, and it would not be said that the driver is distracted from the driving task in such situations.

So one cannot say that mental workload always diminishes driving performance. Many would claim that on boring stretches of highway some mental workload helps the driver stay awake and therefore enhances driving. In any case, mental workload is the totality of mental effort applied to execution of tasks (including what may distract from driving itself), and its meaning seems not to characterize the "pulling away" (of attention) in Webster's definition. Mental workload measurement has been done in aviation research for several decades by use of subjective scales and physiological indices that seem not to be measuring distraction directly. Secondary tasks have also been used to measure workload, and clearly these are themselves imposed distractors in the "pulling away" sense. In vehicle driving Boer (2000) has suggested that response variation (entropy) be used as a measure of workload, but it would probably be increased by distraction (increased gain and delay, as mentioned earlier). So distraction and workload do not mean quite the same thing, but clearly they are interrelated in complex ways.

There are also issues of driver adaptation to workload transients by adjusting the task. The

Downloaded from hfs.sagepub.com at MASSACHUSETTS INST OF TECH on August 12, 2010

driver instinctively speeds up on straight roads and slows on curves and, in the same way, can adjust bandwidth of attention load by waiting for a calm environment before engaging in non-driving tasks. (Whether adaptive IT devices can force conformance to this leveling of bandwidth remains to be seen.)

### Study of Operator Distraction in Simple Control Tasks

Although there is a long history of research on human operators in simple manual control loops, distraction has not historically been of special interest in such studies. However, there might be a real advantage to investigating distraction in these simple tasks, the reason being the general principle that if a problem is hard to solve in a complex context there is usually merit to gaining understanding in a simple context and only then moving into greater complexity.

For example, in a one-dimensional tracking task with a steering wheel control, simple S*, D*, and V* disturbances can be introduced into the loop to verify that their effect is as predicted, and the same could be done in longitudinal control with acceleration and brake pedals. For comparison, the control loop can be opened at various points. Sampling can be forced at different rates and for different intervals to determine the performance effects. Varying preview can also be introduced, with the preview displayed as a trace on a computer screen. Lane changes can be introduced by having two parallel reference lines, and even an overtaking vehicle can be presented as a moving rectangle. Warnings can be employed. Cognitive side tasks can be imposed that require various degrees of vision, memory, and motor skill. None of these manipulations will look like driving a car. That is not the purpose. The purpose is to come closer to measuring the "pure elements" of intention, sensing, and decision and how their disturbance affects performance.

Earlier I mentioned the DeFerrari (1961) observation that severe sleep deprivation caused increase in both delay and gain. However, it is not clear that distraction will produce the same result. An alternative hypothesis is that sustained effort to time-sharing driving with another task will produce gain decrease, at least until the driver "wakes up" to a large error discrepancy in vehicle control.

From such simple tracking experiments, the elements of a dynamic model of the distracted driver can be inferred. These results can then be compared with measurements for doing the same things in a more realistic driving simulator and, eventually, with measurements in actual driving.

## CONCLUSIONS

Driver distraction is viewed as a disturbance imposed within a lateral or longitudinal control vehicle loop. Its effects on performance are shown to differ, depending on whether it occurs at the stage of driver intending, vehicle/environment state sensing, cognition/action decision making, or vehicle response. Distraction is also related to sampled-data control and preview control. In modern (or optimal) control, an extension of classical control, the internal model is shown to make best use of both measurement and expected results of recent control actions. These elements combine into an alternate framework for defining driver distraction. Based on this approach, several implications for driver distraction research are presented.

## ACKNOWLEDGMENTS

Valuable comments and suggestions were received from John Lee, Daniel McGehee, and Michelle Reyes of the University of Iowa; Donald Sussman and Mary Stearns of the Volpe National Transportation Systems Center; Michael Perel, Michael Goodman, and Duane Perrin of the National Highway Transportation Safety Administration; and the reviewers.

## REFERENCES

Allen, R. W., Rosenthal, T. J., Aponso, B. L., Klyde, D. H., Anderson, F. G., & Christos, J. P. (1998, February). *A low cost PC based driving simulator for prototyping and hardware-in-the-loop applications* (SAE Paper No. 98-0222, Special Pub. 1361). Paper presented at the SAE International Congress and Exposition, Detroit, MI.

Allen, R. W., Rosenthal, T. J., & Christos, J. P. (1998). *Applying vehicle dynamics analysis and visualization to roadway and roadside studies* (Report FHWA-RD-98-030). Washington, DC: U.S. Dept of Transportation.

Anderson, D., Abdalla, A., Pomietto, B., Goldberg, C., & Clement, V. (2001). *Distracted driving: Review of current needs, Efforts and recommended strategies* (Senate Document 14). Richmond: Commonwealth of Virginia.

Downloaded from hfs.sagepub.com at MASSACHUSETTS INST OF TECH on August 12, 2010

Anderson, J., & Lebiere, C. (1998). *The atomic components of thought.* Mahwah, NJ: Erlbaum.

Boer, E. R. (2000). Behavioral entropy as an index of workload. in *Proceedings of the XIVth Triennial Congress of the International Ergonomics Association and 44th Annual Meeting of the Human Factors and Ergonomics Society* (pp. 3.125–3.128). Santa Monica, CA: Human Factors and Ergonomics Society.

Cole, P. K., & Hughes, B. L. (1988). What attracts attention while driving? *Ergonomics, 29,* 377–391.

Courage, C., Milgram, P., & Smiley, A. (2000). An investigation of attention demand in a simulated driving environment. In *Proceedings of the XIVth Triennial Congress of the International Ergonomics Association and 44th Annual Meeting of the Human Factors and Ergonomics Society* (pp. 3.336–3.339). Santa Monica, CA: Human Factors and Ergonomics Society.

DeFerrari, H. A. (1961). *Design and experimentation with a device for the detection of driver alertness during actual road tests.* Unpublished master's thesis, Massachusetts Institute of Technology, Mechanical Engineering Department, Cambridge, MA.

Fernald, J. C. (1947). *Synonyms, antonyms and prepositions.* New York: Funk and Wagnalls.

Hancock, P. A. (1999). Effects of in-vehicle distraction on driver response during a crucial maneuver. *Transportation Human Factors 1,* 295–309.

Horrey, W. J., & Wickens, C. D. (2002). *Driving and side task performance: The effects of display clutter, separation and modality* (Tech. Report AHFD-02-13//GM-02-2). Savoy: University of Illinois, Institute of Aviation.

Jagacinski, R., & Flach, J. (2003). *Control theory for humans.* Mahwah, NJ: Erlbaum.

Kahneman, D. (1973). *Attention and effort.* Englewood Cliffs, NJ: Prentice Hall.

Kalman, R. E. (1960). A new approach to linear filtering and prediction problems. *Journal of Basic Engineering, Transactions of ASME, 82D,* 33–45.

Kleinman, D. L., Baron, S., & Levison, W. H. (1970). An optimal control model of human response, Part I. *Automatica, 63,* 357–369.

Kok, J. J., & Stassen, H. G. (1980). Human operator control of slowly responding systems: Supervisory control. *Journal of Cybernetics and Information Science, 3,* 123–174.

Landry, S. J., Sheridan, T. B., & Yufik, Y. M. (2001). A methodology for studying cognitive groupings in a target tracking task. *IEEE Transactions on Intelligent Transportation Systems, 2*(2), 92–100.

Lee, J. D., Caven, D., Haake, S., & Brown, T. L. (2001). Speech-based interaction with in-vehicle computers: The effect of speech-based E-mail on drivers' attention to the roadway. *Human Factors, 43,* 631–640.

Lee, J. D., McGehee, D., Brown, T. L., & Reyes, M. (2002). Collision warning timing, driver distraction, and driver response to imminent rear end collision in a high fidelity driving simulator. *Human Factors, 44,* 314–334.

Levison, W. H. (1993). A simulation model for the driver's use of in-vehicle information systems. In *Transportation Research Record 1631: Driver and vehicle modeling* (n.p.). Washington, DC: National Research Council, Transportation Research Board.

Levison, W. H. (1998). Interactive highway safety design model: Issues related to driver modeling. *In Transportation Research Record 1631* (pp. 20–27). Washington, DC: National Research Council, Transportation Research Board

Liu, A., & Pentland, A. P. (1997). Toward real time recognition of driver intention. In *Proceedings of the 1997 IEEE Intelligent Transportation Systems Conference* (pp. 236–241). Piscataway, NJ: Institute of Electrical and Electronics Engineers.

Llaneras, R. E. (2000). *NHTSA driver distraction Internet forum: Summary and proceedings.* Washington, DC: National Highway Traffic Safety Administration. Available: http://www-nrd.nhtsa.dot.gov/departments/nrd-13/DriverDistraction.html

Meyer, D. E., & Kieras, D. E. (1997). A competition theory of executive processes and multiple task performance: Part I. Basic mechanisms. *Psychological Review, 104,* 3–65.

Michon, J. A. (Ed.). (1993). *Generic intelligent driver support.* New York: Taylor & Francis.

Moray, N. (1988). Mental workload since 1979. *International Review of Ergonomics, 2,* 123–150.

Mourant, R. R., & Ge, Z. (1997). Measuring attentional demand in a virtual environments driving simulator. In *Proceedings of the Human Factors and Ergonomics Society 41st Annual Meeting* (pp. 1268–1272). Santa Monica, CA: Human Factors and Ergonomics Society.

Pashler, H. E. (1998). *The psychology of attention.* Cambridge, MA: MIT Press.

Rasmussen, J. (1986). *Information processing and human-machine interaction.* New York: North-Holland.

Reason, J. (1990). *Human error.* Cambridge, UK: Cambridge University Press.

*Roget's international thesuarus.* (1977). New York: Harper and Row.

Senders, J. W. (1964). The human operator as a monitor and controller of multi-degree-of-freedom systems. *IEEE Transactions on Human Factors in Electronics, HFE-1*(1), 2–5

Senders, J. W., Kristofferson, A. B., Levison, W. H., Dietrich, C. W., & Ward, J. L. (1967). The attentional demand of automobile driving. *Highway Research Record, 195,* 15–32.

Sheridan, T. B. (1961). Experimental analysis of time variation of the human operator's transfer function. In *Proceedings of the First International Federation of Automatic Control Congress* (pp. 1681–1686). London: Butterworths.

Sheridan, T. B. (1966). Three models of preview control. *IEEE Transactions on Human Factors in Electronics, 7,* 91–102.

Sheridan, T. B. (1970). How often the supervisor should sample. *IEEE Transactions on Systems, Man, and Cybernetics, SSC-6,* 140–145.

Sheridan, T. B., & Ferrell, W. R. (1974). *Man-machine systems: Information, control and decision models of human performance.* Cambridge MA: MIT Press.

Stutts, J. C., Reinfurt, D. W., Staplin, L., & Rodgman, E. (2001). *The role of driver distraction in traffic crashes* (Report prepared for AAA Foundation for Traffic Safety). Chapel Hill: University of North Carolina Highway Safety Research Institute.

Wang, J. S., Knipling, R. R., & Goodman, M. J. (1996). The role of driver inattention in crashes: New statistics from the 1995 crashworthiness data system. In *Proceedings of the 40th Annual Meeting of the Association for the Advancement of Automotive Medicine* (pp. 377–792). Barrington, IL: AAAM.

*Webster's third new international dictionary.* (1965). Springfield, MA: Merriam.

Welford, A. T. (1952). The psychological refractory period and the timing of high speed performance: A review and a theory. *British Journal of Psychology, 43,* 2–19.

Wickens, C. D. (1984). Processing resources in attention. In R. Parasuraman & R. Davies (Eds.), *Varieties of attention* (pp. 63–101). New York: Academic.

Wickens, C. D. (2002). Multiple resources and performance prediction. *Theoretical Issues in Ergonomics Science, 2*(2), 159–177.

Wierwille, W. (1993). Visual and manual demands of in-car controls and displays. In B. Peacock & W. Karwowski (Eds.), *Automotive ergonomics* (pp. 299–320). New York: Taylor & Francis.

Thomas B. Sheridan is a professor emeritus of engineering and applied psychology at the Massachusetts Institute of Technology and senior fellow at the Volpe National Transportation Systems Center. He received his Sc.D. in engineering from MIT in 1959.

*Date received: February 19, 2003*
*Date accepted: July 26, 2004*

Downloaded from hfs.sagepub.com at MASSACHUSETTS INST OF TECH on August 12, 2010