CHAPTER 6 - GEOTECHNICAL

TABLE OF CONTENTS

Page

6.1 GENERAL 6-1

6.2 GUIDANCE AND REFERENCES 6-2

A. General References 6-2
B. Geology, Landslides, and Field Procedures 6-2
C. Structures and Foundations 6-3
D. Material and Pavement Design 6-4
E. Subsurface Drainage 6-4
F. Computer Programs 6-5

6.3 INVESTIGATION PROCESS 6-6

A. Geotechnical Equipment 6-7
B. Planning Geotechnical Investigations 6-9
C. Drilling and Sampling 6-14
D. Geophysical and In Situ Tests 6-16
E. Laboratory Tests 6-19

6.4 GEOTECHNICAL ANALYSIS 6-21

A. Roadway Soils 6-21
B. Structure Foundations 6-26
C. Retaining Walls 6-30
D. Pavement Design 6-32
1. New and Reconstructed Pavement Design
2. Pavement Overlay Design
3. Pavement Rehabilitation Design Other Than Overlay
E. Material Sources 6-39
F. Landslide Analysis 6-41
G. Subsurface Drainage 6-43

6.5 APPROVALS (Reserved)

6.6 GEOTECHNICAL REPORTS 6-46

A. Report Structure and Outline 6-46
B. Checklists 6-47
C. Standard Forms 6-47

6.7 DIVISION PROCEDURES 6-48

EXHIBITS

LIST OF TABLES

Tables **Page**

6-1 General Investigation Equipment Requirements 6-9
6-2 Sources of Regional Geotechnical Information 6-11
6-3 Use of Trenching and Test Pits 6-12
6-4 Guidelines for Geotechnical Drilling Investigations 6-13
6-5 Test Borings - Types and Application 6-14
6-6 Sampling Guidelines 6-15
6-7 Guidelines for Using Geophysical Methods 6-17
6-8 Common Procedural Errors using Standard Penetration Test 6-17
6-9 Empirical Values, Relative Density, & Unit Weights of Granular Soils 6-18
6-10 Guideline for Selection of Laboratory Tests 6-20
6-11 Roadway Soils Analysis Factors 6-23
6-12 Shrink/Swell Factors for Common Materials (2) 6-24
6-13 Preliminary Foundation Type Selection 6-29
6-14 Soil Support Correlations 6-34
6-15 Regional Factor Guidelines for Pavement 6-36

CHAPTER 6 - GEOTECHNICAL

6.1 GENERAL

This chapter provides guidance for all geotechnical investigations, analyses, and reports produced by the Federal Lands Highway Divisions. Although greatly advanced in recent years, the state-of-the-art of the geotechnical engineering field is still largely dependent upon engineering judgment to provide the most efficient and economical investigations. Dealing with the variability of projects, terrains, climates, and client agency constraints requires flexibility and resourcefulness.

Although primarily intended for use by a geotechnical engineer/geologist, the information contained herein can be used by designers and others during the design process. Geotechnical responsibilities include conducting investigations, performing analyses, and providing recommendations for the following:

- Geological and geotechnical reconnaissance.
- Roadway soils.
- Cut and fill slopes.
- Foundations.
- Landslides.
- Material sources.
- Retaining walls.
- Subsurface drainage.
- Pavements.

Each of these areas are addressed individually, providing guidelines, direction, and references for more specific and detailed information.

6.2 GUIDANCE AND REFERENCES

The publications listed in this section provided much of the fundamental source information used in the development of this chapter. While this list is not all inclusive, the publications listed will provide additional information to supplement this manual.

A. General References.

Bowles. *Foundation Analysis and Design*. 4th ed. McGraw-Hill Book Company. 1988.

Peck, Hanson, and Thornburn. *Foundation Engineering*. John Wiley and Sons, Inc. 1974.

Terzaghi and Peck. *Soil Mechanics in Engineering Practice.* John Wiley and Sons, Inc. 1967.

Wintercorn. *Foundation Engineering Handbook*. 2nd ed. Van Nostrand Reinhold Company. 1991.

Canadian Foundation Engineering Manual. 3rd ed. Canadian Geotechnical Society. 1992.

Geotechnical Engineering Notebook. DOT, FHWA. Office of Engineering, Bridge Division.

Geotextile Engineering Manual. DOT, FHWA. 1984.

Soil Dynamics, Deep Stabilization, and Special Geotechnical Construction. NAVFAC Design Manual 7.3. Department of the Navy. April 1983.

Soil Mechanics. NAVFAC Design Manual 7.1. Department of the Navy. September 1986.

B. Geology, Landslides, and Field Procedures.

Acker. *Basic Procedures for Soil Sampling and Core Drilling*. Acker Drill Co., Inc. 1974.

Beck. *Physical Principles of Exploration Methods.* New York. John Wiley and Sons, Inc. 1982.

Hamblin and Howard. *Physical Geology Laboratory Manual*. Minneapolis. Burgess Publishing Co. 1975.

Hunt. *Geotechnical Engineering Investigation Manual*. New York. McGraw-Hill Book Co. 1984.

Pitts. *A Manual of Geology for Civil Engineers*. Salt Lake City. John Wiley and Sons, Inc. 1984.

Manual on Subsurface Investigations. AASHTO. 1988.

Driller's Safety Manual. U.S. Department of the Interior, Bureau of Reclamation. 1973.

Geotechnical Instrumentation (FHWA Workshop Manual). DOT, FHWA.

The Cone Penetrometer Test. FHWA-SA-91-043. DOT, FHWA. 1992.

The Flat Dilatometer Test. FHWA-SA-91-044M. DOT, FHWA. 1992.

Advanced Technology for Soil Slope Stability, FHWA-SA-94-005. DOT, FHWA. 1994

Handbook of Engineering Geophysics (Volume 1, Seismic, 1984 and Volume 2, Electrical Resistivity, 1980). Minneapolis. Bison Instruments, Inc.

The Pressuremeter Test for Highway Application. FHWA-IP-89-008. DOT, FHWA. 1989.

Landslides Investigation and Mitigation. Transportation Research Board, National Academy of Sciences. Washington, DC. 1995.

Rock Slopes: Design, Excavation, Stabilization. FHWA-TS-89-045. DOT, FHWA. 1989.

Rock Blasting and Overbreak Control. FHWA-HI-92-001. DOT, FHWA. 1991.

Duncliff. *Geotechnical Instrumentation for Monitoring Field Performance*. John Wiley & Sons, Inc. 1988.

C. Structures and Foundations.

Poulos and Davis. *Pile Foundation Analysis and Design*. 1980.

Drilled Shafts: Construction Procedures and Design Methods. DOT, FHWA. 1988.

Handbook on Design of Piles and Drilled Shafts Under Lateral Load. FHWA-IP-84-011, DOT, FHWA. 1984.

Behavior of Piles and Pile Groups Under Lateral Load. FHWA-RD-85-106. DOT, FHWA. 1986.

AASHTO LFRD Bridge Design Specifications. AASHTO. 1994.

Reeves. *Applications of Walls to Landslide Control Problems*. American Society of Civil Engineers. 1982.

Spread Footings for Highway Bridges. FHWA-RD-86-185. DOT, FHWA. 1987.

Manual on Foundation Investigation. AASHTO. 1978.

AASHTO-AGC-ARTBA Taskforce Report. *In Situ Improvement Techniques*. 1990.

Foundation and Earth Structures. Design Manual 7.2; NAVFAC DM-7.2. Department of the Navy. 1982.

Permanent Ground Anchors. FHWA-DP-68-1R. DOT, FHWA. 1984

Manual on Design and Construction of Driven Pile Foundations. FHWA DP-66-1. DOT, FHWA. Office of Engineering, Bridge Division. 1986.

Retaining Wall Design Guide. Second Edition (FHWA-FLP-94-006). U.S. Department of Agriculture, Forest Service. September 1994.

Soils and Foundation Workshop Manual. DOT, FHWA. Office of Engineering, Bridge Division. 1993.

D. Material and Pavement Design.

Techniques for Pavement Rehabilitation, A Training Course. 3rd Revision, ERES Consultants, Inc. 1987

Pavement Design Principles and Practices, A Training Course. ERES Consultants, Inc. 1987

Krebs and Walker. *Highway Materials*. McGraw-Hill Book Company. 1971.

Yoder and Witczak. *Principles of Pavement Design*. 2nd ed. John Wiley and Sons, Inc. 1975.

AASHTO Pavement Overlay Design. FHWA-HI-94-048. DOT, FHWA. 1994

Distress Identification Manual for the Long-Term Pavement Performance Projects. SHRP-P-338, SHRP. 1993

Guide for Design of Pavement Structures. AASHTO. 1993.

Pavement Rehabilitation Manual. DOT, FHWA. Office of Engineering, Pavement Division. 1990.

Soils Manual for the Design of Asphalt Pavement Structures. The Asphalt Institute. 1986

Thickness Design - Asphalt Pavements for Highways and Streets. The Asphalt Institute. 1991.

Pavement Notebook for FHWA Engineers. Office of Engineering, Pavment Division.

E. Subsurface Drainage.

Geotextile Design and Construction Guidelines. FHWA-HI-95-038. DOT, FHWA. 1995.

Drainage of Asphalt Pavement Structures. The Asphalt Institute Manual Series No. 15. September 1984 edition.

Geocomposite Drains. Report No. FHWA/RD-86/171. DOT, FHWA. October 1986.

Geotechnical Fabrics. Report No. FHWA/RD-80/021. DOT, FHWA. 1980.

Highway Subdrainage Design. Report No. FHWA-TS-80-224. DOT, FHWA. 1980.

Improving Subdrainage and Shoulders of Existing Pavements. Report No. FHWA/RD-81/078. DOT, FHWA. January 1982.

Underground Disposal of Storm Water Runoff. Report No. FHWA-TS-80-218. DOT, FHWA. February 1980.

F. Computer Programs. The following is a listing of computer programs that are available and may be used when appropriate:

Foundations

- GRL WEAP 1.994-1 - Wave Equation Analysis of Piles
- NAVPILE - Nevada Pile Analysis (Static)
- COM 624 P Version 2 - Lateral Load Analysis of Driven and Non-Driven Piles
- SPILE - Ultimate Static Capacity for Driven Piles
- CBEAR - Bearing Capacity Analysis for Shallow Foundations

Pavment Design

- DARWin - Pavement Design Analysis and Rehabilitation for Windows
- DAMA - Pavment Structural Analysis Using Multi-Layer Elastic Theory

Slope Stability

- LEASE I - Limiting Equilibrium Analysis in Soil Engineering
- STABL4 - Slope Stability Analysis
- SLOPIN - Calcomp Plot of Inclinometer Data
- INCLIN - Print Plot of Inclinometer Data
- XSTABL - Slope Stability Analysis
- DIGIPRO - Data Reduction and Graphing Software for Inclinometers
- EMBANK - One Dimensional Consolidation due to Embankment Loads

Geophysical Programs

- SEISMIC12 - Channel Refraction Seismic Test Data Analysis
- RESIST - Resistivity Data Analysis
- SEISREFA - Sesimic Refraction Analysis

6.3 INVESTIGATION PROCESS

The primary purpose of a geotechnical investigation is to provide design engineers with a knowledge of the subsurface conditions at a specific project site. The investigation should also provide the construction project engineers and contractors with information concerning the materials and conditions that may be encountered in the field.

The scope and cost of a geotechnical investigation should be adjusted to the size and complexity of the proposed project. The potential for catastrophic failure and/or failure consequences must be evaluated when establishing scope of the investigation.

In all geotechnical investigations, safety of field crew and traveling public must be of high priority. The nature of the equipment used and climatic conditions often present potential hazards that must be evaluated on an individual basis. It is the responsibility of the geotechnical engineer/ geologist, as well as field crew members to adjust the investigation program and/or provide equipment, training, and other means to provide safe working conditions. Field crews should be aware of and use traffic safety control plans based upon MUTCD requirements.

Geotechnical investigations should not be attempted until certain project-specific information has been obtained. The following list identifies typical project requirements and suggests where the necessary information on specific subjects may be obtained. Exhibit 6.1 is used to gather and document this preliminary information.

Possible Sources for Site Specific Information

Project Specifics	Information Sources
Type of proposed project. Proposed project termini. Funds available. Schedule requirements. Items requiring investigation. Local authorities to contact. Location and type of utilities present.	Planning and Coordination or Project Development Unit
Scope of investigation desired. Availability of equipment.	Geotechnical Engineer
Location of structures.	Structures/Bridge Unit
Site maps and field reference systems.	Location and/or Survey Unit
Specific site restrictions such as water quality, environmental considerations, or client agency considerations.	Environmental Unit
Right-of-entry (access) restrictions.	Applicable property owners

Special situations occasionally require in situ testing or instrumentation to obtain accurate information for both design and construction. These tests and instrumentation may be highly specialized and may require specialized assistance. The following are typical reasons for specialized instrumentation:

- Construction control, both during design and/or construction.
- Safety.
- Verifying design assumptions.
- Verifying new construction techniques.
- Verifying long-term satisfactory performance.
- Verifying contractor compliance with specifications.
- Advancing the state-of-the-art.
- Legal reasons.

A. Geotechnical Equipment. Sometimes to perform geotechnical investigations, specialized subsurface investigation equipment is required. In cases of sporadic use or when highly trained technicians must be assigned exclusively to operate equipment, the geotechnical unit may prefer to use consultants and/or contractors to provide such services in lieu of actually purchasing and maintaining such equipment. Below are typical sources for technical assistance to obtain equipment or expertise:

- Other FLH Offices.
- FHWA Research and Implementation units.
- Local government agencies.
- Other Federal Government agencies.
- Universities.
- Private consultant.
- Equipment manufacturers.

Each geotechnical unit should maintain access to the latest equipment and technology so it can perform efficient and effective investigations. This policy also provides FHWA the opportunity to implement and experiment with new technology, equipment and ideas. Equipment can be grouped into three major categories:

1. Drill equipment and sampling tools
2. Geophysical and in situ testing equipment
3. Pavement evaluation equipment.

In addition to these major areas, incidental hand tools are required for the generalized reconnaissance type of investigations usually performed by an engineer or geologist. This equipment consists of (as a minimum), a Brunton compass, survey transit, cloth tape, hand level, rock hammer, hand augers, test pit excavation equipment, and record keeping notebooks.

Minimum drill equipment should consist of a power auger drill rig capable of advancing an 200 millimeter hollow stem auger 35 meters in very stiff clays or dense sand and gravel. The drill should be capable of traversing soft ground, moderately steep slopes, and rough terrain. The drill should also have capabilities for obtaining at least 45 meters of "N" size or larger rock cores. Soil testing and sampling capabilities should consist of at least the "Standard Penetration Test AASHTO T 206" and the "Thin Walled Tube Sample AASHTO T 207". In addition to the large drilling equipment, a portable drill capable of drilling at least "B" size core a minimum of 15 meters, is desirable. Geotechnical Engineering Investigation Manual, by Hunt, provides an excellent source of detailed information on investigation equipment requirements.

The geophysical equipment should consist of a portable, single channel seismic unit and a resistivity unit. In addition, a multi-channel seismic unit with enhancement capability is desirable. Physical Principles of Exploration Methods, by Beck, and manufacturer's literature provide the best source of geophysical equipment information.

Minimum in-situ test equipment should include a cone penetrometer, a vane shear, and in-place density equipment (sand cone, nuclear gauge, etc.). Project site instrumentation such as inclinometer, piezometer, and strain gage readout devices should also be available. A detailed instrumentation equipment listing is available in the Geotechnical Instrumentation for Monitoring Field Performance, by Dunncliff.

Available pavement evaluation equipment should consist of a calibrated distance measuring device, pavement deflection equipment, roughness measurement, and pavement core drill. In addition, access and familiarity with skid testing devices, photo logging and video tape equipment is desirable.

Table 6-1 provides guidelines for the type of equipment and the frequency of use that is typical for different types of geotechnical investigations.

Table 6-1
General Investigation Equipment Requirements

Type of Investigation	Use by Equipment Type									
	Hollow Stem Auger Drill	Large Core Drill	Small Core Drill	Seismic	Resistivity	Roughness and Deflection	Water Supply Equipment	In situ Strength Devices	In situ Monitors	Back-hoe
Roadway Soils	1	4	4	2	3	3	4	3	4	1
Foundations	1	1	2	2	2	4	2	2	2	4
Existing Pavement Evaluations	4	2	1	4	4	1	1	4	4	4
Material Sources	1	1	2	2	2	4	1	4	3	1
Landslides	1	3	3	2	2	4	4	1	1	4
Cutslopes	2	2	2	2	3	4	2	3	2	2

Use Code:
1 = Frequently 3 = Seldom
2 = Occasional 4 = Usually Inappropriate

B. Planning Geotechnical Investigations. After the project has been initiated, the first phase of any geotechnical investigation should consist of a desk review of available geotechnical information and project specific requirements and information. This information is vital to planning an efficient, cost-effective field investigation. The information is used to do the following:

- Determine the nature and scope of the geotechnical field investigation.
- Select proper field equipment.
- Estimate manpower, time, and total costs.
- Select field reference system for geotechnical reports.
- Determine site conditions that may restrict or limit the investigation.

The wide range of geographical areas where projects may be located requires access to geotechnical information from a variety of sources. Table 6-2 provides an initial listing of potential sources and a brief description of information available. Each geotechnical unit should supplement the sources listed in Table 6-2 by establishing and maintaining a file of commonly used regional information.

In addition, the following should be available from the local and/or in-house resource center:

- Aerial photographs.
- Previous geotechnical reports.
- Survey notes.
- As-built plans.

After this information is obtained and studied, a preliminary boring plan should be developed. This boring plan should contain information on the following:

- Type, number, and location of proposed test holes.
- Estimated depth, type of testing, and sampling interval for each hole.
- Type and location of utilities.
- List of local contacts for right-of-access and for utilities.
- Arrangements for traffic control (flagmen, signing, etc.).
- Source of drilling water.
- Instructions for communications, sample handling.

Table 6-2
Sources of Regional Geotechnical Information

Source: U.S. Geological Survey (USGS). Consult USGS Index of Publications. Index from Superintendent of Documents, U.S. Government Printing Office, Washington, D.C. 20402. Maps available from U.S. Department of Interior, Geological Survey, National Center, 12201 Sunrise Valley Drive, Reston, VA 22092.

- Geological index maps
  Individual maps of each State showing coverage and sources of all published geological maps.
- Geological Quadrangle Maps of United States
  This series supplants the older geological folios including areal or bedrock geology maps with brief descriptive text. Series is being extended to cover areas not previously investigated.
- Bulletins, professional papers, circulars, annual reports, monographs
  General physical geology emphasizing all aspects of earth sciences, including mineral and petroleum resources, hydrology and seismicity. Areal and bedrock geology maps for specific locations included in many publications.
- Water supply papers
  Series includes papers on groundwater resources in specific localities and are generally accompanied by description of subsurface conditions affecting groundwater plus observations of groundwater levels.
- Topographic maps
  Topographic contour maps in all States, widespread coverage being continually expanded.

Source: Geological Society of America. Consult societies publications. Index available from Geological Society of America, P.O. Box 9140, 3300 Penrose Place, Boulder, Colorado 80302.

- Monthly bulletins, special papers, and memoirs
  Texts cover specialized geological subjects and intensive investigations of local geology. Detailed geology maps are frequently included in the individual articles.
- Geological maps
  Publications include general geological maps of North and South America, maps of glacial deposits, and Pleistocene aeolian deposits.

Source: U.S. Department of Agriculture (USDA) Soil Conservation Service. Consult List of Published Soil Surveys (published annually). Available from USDA, Soil Conservation Service, Washington, D.C.

- Soil maps and reports
  Surveys of surface soils described in agriculture terms. Physical geology summarized. Excellent for highway or airfield investigations. Coverage mainly in Midwestern, Eastern, and Southern United States,

Source: State Geological Surveys/Sate Geologist Offices. Most States provide excellent detailed local geological maps and reports covering specific areas or features in the publications of the State geologist. Some offices are excellent sources of information on foreign countries.

Tables 6-3 and 6-4 may be used as guidelines for development of the investigation plan. An on-site visit is desirable and often required as part of the development of a detailed investigation plan before field crews begin work at the project site.

Table 6-3
Use of Trenching and Test Pits

Exploration Method	General Use	Capabilities	Limitations
Hand-Excavated Test Pits and Shafts	Bulk sampling, in-situ testing, visual inspection.	Provides data in inaccessible areas, less mechanical disturbance of surrounding ground.	Expensive, time-consuming, limited to depths above groundwater level.
Backhoe Excavated Test Pits and Trenches	Bulk sampling in-situ testing, visual inspection, excavation rates, depth of bedrock and groundwater.	Fast, economical, generally less than 3 meters deep, can be up to 6 meters deep.	Equipment access, generally limited to depths above groundwater level, limited undisturbed sampling.
Drilled Shafts	Pre-excavation for piles and shafts, landslide investigations, and drainage wells.	Fast, more economical than hand excavated, minimum 750 mm diameter maximum 2 meters diameter	Equipment access, difficult to obtain undisturbed samples casing may obscure visual inspection, and costly mobilization.
Dozer Cuts	Bedrock characteristics, depth of bedrock and groundwater level, rippability, increase depth capability of backhoes, level area for other exploration equipment.	Relatively low cost, exposures for geologic mapping.	Exploration limited to depth above groundwater level.

Table 6-4
Guidelines for Geotechnical Drilling Investigations*

*Information obtained from drilling may be supplemented by geophysical investigations.

Type of Investigation/Number of Borings	Depth of Borings
Structure Foundations: Minimum one boring per substructure unit.	**Continue borings**: (1) through unsuitable foundation soils (such as peats, highly organic soils, soft fine-grained soils, loose coarse grained soils, etc.) into competent material of suitable bearing capacity and; (2) to depth where added stress due to estimated footing load is less than 10 percent of the existing effective soil overburden stress or; (3) minimum of 3 meters into bedrock if bedrock is encountered at shallower depth as determined by (2).
Retaining Walls: Minimum 1 boring per wall. Additional borings spaced 15 to 60 meters. Some borings should be in front of and in back of wall.	Continue borings to depth of 2 times wall height or minimum of 3 meters into bedrock.
Bridge Approach Embankments Over Soft Ground: When approach embankments are placed over soft ground at least one boring should be made at each embankment to determine the problems associated with stability and settlement of the embankment. Test borings at proposed abutment locations may serve both stability and structural investigations.	Same as established above for structure foundations: Additional shallow explorations (hand auger holes) taken at approach embankment locations are an economical way to determine depth of unsuitable surface soils or topsoil.
Cuts and Embankments: Space borings every 60 meters (erratic conditions) to 150 meters (uniform conditions) with at least one boring taken in each separate land form. For high cuts and fills (8 meters or greater), it is desirable to have a minimum two borings along a straight line to establish geological cross section for analysis.	**Cuts** 1) In stable materials extend borings minimum 3 meters below proposed centerline grade. 2) In weak soils, at or near proposed centerline grade, extend borings below grade to competent materials. **Embankments** Continue borings to competent material or to depth of twice the embankment height.
Landslides: Minimum 2 borings along a straight line to establish geologic cross section for analysis. Number of sections depends on extend of stability problem. For an active slide, place at least one boring above and below sliding area.	Extend borings to an elevation below active or potential failure surface and into competent stratum, or to a depth for which failure is unlikely because of geometry of cross section. Bore holes used to install inclinometers must be extended to competent material below the slide movement.
Material Sites (Borrow Sources and Quarries) Space borings or test pits on a grid pattern every 30 to 45 meters or change of material.	Extend exploration to base of deposit or to depth required to provide needed quantity.
Pavement Rehabilitation Minimum one boring or test pit per kilometer with additional exploration as needed to define changes in subgrade material, pavement section, and locally distressed areas.	Extend depth to at least 0.6 meters below expected subgrade.

C. Drilling and Sampling. The purpose of a drilling and sampling program is to obtain samples that reasonably represent subsurface conditions over the entire project site. Guidance for selection of the applicable test boring type can be found in Table 6-5.

Sampling type and frequency is dependent upon both the type of material encountered and the purpose of the investigation. The AASHTO Manual on Subsurface Investigation provides additional detailed information. When appropriate, continuous sampling provides the most complete and accurate information. When equipment, materials, or cost effectiveness prevent continuous sampling, typical sampling frequencies used are provided in Table 6-6. The preliminary boring plan is documented and transmitted to the field crews by use of Exhibit 6.2. Exhibits 6.3, 6.4, and 6.5 are used to document the materials encountered in the borings.

Table 6-5
Test Borings - Types and Application

Boring Method	Procedure Utilized	Applicability
Auger Boring (AASHTO T 203)	Hand or power operated augering with periodic removal of material. In some cases continuous auger may be used requiring only one withdrawal. Changes indicated by examination of material removed.	Probe investigations to bedrock, and shallow disturbed soil samples (less than 6 meters in depth). **Typical uses** : Disturbed soil sampling. Determine depth of overburden.
Hollow-stem Auger (AASHTO T 251)	Power operated, hollow stem serves as a casing.	General purpose for soils and other locations requiring a cased hole. **Typical uses:** Disturbed and undisturbed soil sampling and insitu testing. Foundation and landslide investigations.
Rotary Drilling (AASHTO T 225)	Power rotation of drilling bit as circulating fluid removes cutting from hole. Changes indicated by rate of progress, action of drilling tools, and examination of cuttings in drilling fluid. Casing usually not required except near surface.	A method to advance borings through a variety of materials including large boulders and broken rock. **Typical uses:** Obtaining rock cores, drilling probes, horizontal drains, and installing instruments.
Wire-line Drilling	Rotary type drilling method where the coring device is an integral part of the drill rod string which also serves as a casing. Core samples obtained by removing inner barrel assembly from the core barrel portion of the drill rod. The inner barrel is released by a retriever lowered by a wire-length through drilling rod.	Efficient method of recovering core samples of rock. **Typical uses** : Foundations, material sources, and rock cut investigation. General rock coring.

Table 6-6
Sampling Guidelines

Sand-Gravel Soils
- SPT[1] (split-spoon) samples should be taken at 1.5 meter intervals and at significant changes in soil strata.
- Continuous SPT samples are recommended in the top 4.5 meters of borings made at locations where spread footings may be placed in natural soils.
- Representative SPT jar or bag samples should be laboratory classified for verification of field visual soil identification.

Silt-Clay Soils
- SPT and "undisturbed" thin wall tube samples[2] should be taken at 1.5 meter intervals and at significant changes in strata.
- SPT and tube samples may be alternated in same boring or tube samples may be taken in separate undisturbed boring.
- Representative SPT jar or bag samples should be laboratory classified for verification of field visual soil identification.
- Tube samples should be tested for consolidation (for settlement analysis) and strength (for slope stability and foundation bearing capacity analysis).
- Field vane shear testing also recommended to obtain in-place shear strength of soft clays, silts, and nonfibrous peats.

Rock
- Continuous cores should be obtained in rock or shales using double or triple tube core barrels.
- For foundation investigations, core a minimum of 3 meters into the rock.
- Core samples should be evaluated for strength testing (unconfined compression) for foundation investigations, and valued for quality tests for quarry investigations (aggregate or riprap).
- Determine percent core recovery and RQD[3] value for each core run and record in the bore log.

Groundwater
- Record water level encountered during drilling, at completion of boring, and at 24 hours after completion of boring in the bore log.
- When water is used for drilling fluid, adequate time should be permitted after hole completion for the water level to stabilize (more than one week may be required). In impermeable soils, a plastic pipe water observation well should be installed to allow monitoring of the water level over a period of time.
- Artesian pressure and seepage zones, if encountered, should also be noted in the bore log.
- The top 300 mm or so for the annular space between water observation well pipes and the borehole wall should be backfilled with grout, bentonite, or a sand-cement mixture to prevent surface water inflow which can cause erroneous groundwater level readings.

NOTES:
1. Standard Penetration Test, AASHTO T 206
2. Thin-Walled Tube Sampling of Soils, AASHTO T 207
3. Rock Quality Designation

Soil samples and rock cores obtained represent a considerable investment of time and money. The samples should be properly labeled, transported, and stored. A detailed treatment of procedures for handling and storing samples is provided in the AASHTO Manual on Subsurface Investigations. However, any method that satisfactorily protects a sample from shock, large temperature changes, and moisture loss may be used. All containers used for storage should be identified with the following:

- Project name and number.
- Box number of total set.
- Bore hole number.
- Applicable depth information.

The identification markings should be on the exterior as well as the interior of the storage container. Rock cores should be routinely photographed, in color, as soon as possible after being taken from the bore hole and before laboratory testing. All samples not used in laboratory testing should be retained until the proposed construction is completed and/or all claims are settled.

D. Geophysical and In-Situ Tests. Geophysical methods are used to gather information on the geological surface features. Generally, geophysical methods are used as a reconnaissance investigation to cover large areas and/or to supplement information between bore holes. The methods given in Table 6-7 should be considered to determine when geophysical testing may provide an economical means of obtaining information. Many benefits may be obtained by use of geophysical tests, but specific procedures and limitations of the testing methods should always be considered. Additional information regarding geophysical investigations is contained in Physical Principles of Exploration Methods.

Seismic refraction geophysical tests are used to provide preliminary subsurface information for the items below:

- Planning detailed drilling investigations.
- Writing project feasibility studies.
- Engineering studies.
- Estimating rippability of rock excavation (see Exhibit 6.20).
- Extending data between bore holes.

Exhibit 6.12 is a form commonly used to collect field seismic information. Detailed procedures can be found in Bison's Handbook of Engineering Geophysics, Volume I. Seismic refraction can only be used to provide reliable information when subsurface strata become more dense with depth. When the subsurface strata are expected to violate this situation, electrical resistivity has provided good results on specific projects. Resistivity is somewhat more difficult to interpret but should be routinely considered. Exhibit 6.13 may be used to collect field data. Detailed analysis procedures and other resistivity information can be found in Bison's Handbook of Engineering, Geophysics, Volume II.

The most commonly used in-situ test for surface investigations is the Standard Penetration Test (SPT). See AASHTO T 206. Some common problems or procedural errors that can provide misleading results are given in Table 6-8. The use of automatic hammers for SPT is recommended if standard drop height and hammer weight can be maintained. SPT values obtained with automatic hammers should be calibrated by field comparisons with standard drop hammer methods. All SPT values should be corrected for overburden pressure. The Bazaraa method as given in the FHWA publication Soils and Foundation Workshop Manual should be used for FLH projects. Table 6-9 provides empirical soil parameters from corrected SPT values for granular soils.

Table 6-7
Guidelines for Using Geophysical Methods

Method	Basic Properties and Measurements	Applications	Frequency of Use
Electrical Resistivity	Electrical conductivity of subsurface materials as measured by apparent resistance.	Identify layers of less competent material laying below more competent layers. Interpolate surface condition between bore holes	Common
Induced Polarization	Electrochemical properties or rock particles and ion concentrations in pore fluids measured by polarization voltages.	Identify location and concentration of potentially environmentally harmful rock material (primarily iron sulfides).	Rare
Seismic Refraction	Density and elasticity of subsurface material as measured by velocities of compression waves.	Estimate depth of more competent materials underlaying less competent material. Interpolate subsurface condition between bore holes.	Common

Table 6-8
Common Procedural Errors
Using Standard Penetration Test

Problem	Circumstance/Cause
Inadequate cleaning and/or seating of sampler.	Sludge and debris trapped in sampler or in bottom of hole.
Failure to maintain adequate hydrostatic pressure and/or over washing ahead of casing.	Fill-up inside casing. Disturbance of in-situ material. Too large pump.
Use of damaged and/or inadequate equipment.	Tip of sampler damaged by heavy driving. Drive weight nonstandard or does not strike drive cap evenly.
Hammer does not free-fall and/or correct height of fall is not maintained.	More than 1.5 turns around cat head or wire line will restrict fall. Proper height is not maintained by operator.
Operator and/or inspector errors.	Incorrect blow count. Incorrect location and/or depth. Sampler overdriven.

Table 6-9
Empirical Values, Relative Density, and Mass Density of Granular Soils*

Description	Very Loose	Loose	Medium	Dense	Very Dense
Relative Density, D_r	0 0.15	0.35 0.65	0.85 1.00		
Corrected Standard Penetration No. N'	4	10	30	50	
Approximate Angle of Internal Friction Φ**	25-35°	27-32°	30-35°	35-40°	38-43°
Approximate Range of Moist Mass Density (ρ) kg/m^3	1100-1600	1400-1800	1700-2100	1700-2200	2100-2400

*Empirical values for (Φ), Relative density (D_R), and unit mass (γ) of granular silts based on corrected N' (Correlations may be unreliable in silts containing gravel.)

** Use larger values for granular material with 5 percent or less fine sand and silt.

Another commonly used in-situ test is the Cone Penetrometer Test (CPT). This test can provide in-situ soil strength parameters and a differentiation between end bearing and side friction for pile design. The test can provide accurate and economical test results in soft to medium dense sands, silts, and clays. Major drawbacks of CPT are that samples are not recoverable and that tests in dense and/or gravel deposits are difficult and may damage equipment. FHWA-SA-91-043 manual entitled The Cone Penetrometer Test should be reviewed before field CPT is attempted. Exhibit 6.11 is a form used to record field CPT data.

Other commonly used in-situ devices are vane shear tests and pressure meter tests. Geotechnical Engineering Investigation Manual and AASHTO Manual on Subsurface Investigations provide additional details on these devices.

The following are types of specialized geotechnical instrumentation commonly in use:

- Inclinometers.
- Piezometer.
- Displacement stakes.
- Strain gauges.
- Earth pressure cells.

The Geotechnical Instrumentation for Monitoring Field Performance by Duncliff is a recommended reference for planning, designing, and specifying instrumentation projects. Exhibits 6.14 and 6.15 are data collection sheets commonly used for field shear tests and inclinometer instrumentation.

E. Laboratory Tests. After collecting soil and rock samples, laboratory tests are routinely performed to quantify material properties and verify design assumptions. The type and number of tests required are primarily a function of the variability of the site, the purpose of the investigation, and the amount of risk and potential consequences of failure. Sufficient testing should be performed so that the geotechnical project engineer or geologist is satisfied that the test results are representative of in-situ conditions.

Table 6-10 provides a guideline for estimating laboratory test requirements for the different types of analysis. Table 6-10 is representative of past experience with projects and is not intended to limit either the type of laboratory test or the frequency of testing but to provide a starting point for evaluation. See Geotechnical Engineering Investigation Manual for additional information.

Requesting and transmitting samples for laboratory testing and evaluation is handled differently in each FLH Division.

Samples shall be clearly identified as to (1) project, (2) bore hole or test pit number, and location, (3) depth of sample taken, and (4) specific test requested. All detailed test results should be included in the finalized geotechnical report. Care should be taken to ensure that only factual data is presented or that all interpretations of laboratory data are clearly identified as such.

Table 6-10
Guideline for Selection of Laboratory Tests

	Laboratory Tests Selection Frequency									
Test Analysis Type	A	B	C	D	E	F	G	H	I	J
Roadway Soil	F	F	F	L	F	F	L	M	L	L
Structural Foundation	F	M	F	L	L	R	F	M	F-M	M
Retaining Wall	F	M	F	M	L	R	F-M	F-M	F-M	M
Pavement Design	F	F	F	M	F	F	L	L	L	L
Material Source	F	F	F	R	F	F	R	M-L	L	L
Landslides	F	F	F	F	L	R	F-M	F-M	F	M

Test Description:

A: Gradation (Classification) AASHTO T88, T89, T90, T100
B: Fine Grain Analysis AASHTO T88
C: Atterberg Limits AASHTO T89, T90
D: Permeability Tests AASHTO T215
E: Remolded Density AASHTO T180 or T99
F: R-Value/CBR/M_r AASHTO T190, T193, T292, T294
G: Unconfined Compression AASHTO T 208
H: Direct Shear AASHTO T 236
I: Triaxial AASHTO T296, T297
J: Consolidation AASHTO T216

Selection Legend:

F: Frequent/Routine Use
M: Moderate Use
L: Limited Use
R: Rarely Used

6.4 GEOTECHNICAL ANALYSIS

An engineering analysis combines the information obtained from the geotechnical field investigation and the laboratory test results to determine the engineering properties and drainage characteristics of the subsurface materials. In addition, the analysis should alert designers, contractors, and construction personnel of potential problems and provide economical solutions with consideration given to alternatives. Finally, the analysis should provide an assessment of risk associated with each of the possible solutions. This section does not give detailed textbook solutions to engineering problems but will provide general guidelines, potential pitfalls of these guides, and specific references to assist the engineer in performing a detailed analysis.

The quality of the analysis depends on several factors. Knowledge of engineering principles and practical experience in application of these principles is of course very important; but a thorough analysis cannot be accomplished without a clear understanding of the proposal details. This understanding requires a flow of communication and information between Project Development, Bridge Design, Planning and Coordination, and the geotechnical engineer. To provide an acceptable analysis of geotechnical information that is practical, economical, and of sufficient detail, final alignment and grade are necessary. The project development process must provide for this information to be obtained and must incorporate sufficient time to allow proper investigation and analysis.

As a minimum, the geotechnical analysis should result in a subsurface profile with design soil strength parameters and an engineering evaluation of the subsurface conditions.

The following sections address the types of projects typical of the Federal Lands Highway Divisions. Within each section, an outline of typical geotechnical procedures with references to appropriate tables and exhibits is provided to focus on the more pertinent items. It is beyond the scope of this chapter to address all details of analysis performed by the geotechnical unit. These outlines are only provided to ensure that basic geotechnical items are consistently considered.

A. Roadway Soils. The vast majority of FLH projects require a roadway investigation. The guidelines presented may be applied to all lengths of roadway projects but the frequency of testing and sampling should be adjusted based upon site specific problems and practical engineering judgment. The following outline provides the basic procedural steps and thought process for typical projects. Sources for site specific information and detailed references are provided. Typical sample forms are provided that may be used as part of the investigation and analysis process.

TYPICAL ROADWAY INVESTIGATION AND ANALYSIS PROCESS

1. Initiate Project.

- Identify available preliminary information (see Exhibit 6.1).
- Obtain or review other pertinent preliminary project development information.

  Engineering study reports
  Location study reports
  Environmental impact documents
  Design scoping reports

2. Review Available Geotechnical Data.

- Review any geotechnical reports and information for projects in the vicinity with emphasis placed on projects on the same route.
- Review published information (see Table 6-2). Place emphasis on USDA soil survey information.
- Obtain survey information such as cross sections, drawings, and plans.

3. Plan Field Investigation.

- Determine drilling requirements (see Table 6-4).
- Review checklists for site investigations (Exhibit 6.27) and roadway cuts and embankments (Exhibit 6.32) to identify needed information to be collected.
- Determine preliminary equipment requirements (see Tables 6-1, 6-3, 6-5 and 6-7).
- Determine site restrictions and revise equipment requirements. A site visit may be required.
- Develop a preliminary boring and testing plan (see Exhibit 6.2).

4. Plan Sampling and Testing.

- Determine sampling and testing requirements (see Tables 6-1, 6-4, and 6-6).
- Record field information (Exhibits 6.3 and 6.10 through 6.15 as applicable).

5. Summarize Field Data.

- Summarize soil survey information (Exhibit 6.8) and water problem areas (Exhibit (6.9).
- Determine appropriate shrink/swell factors (Table 6-12).
- Summarize soil profile information (see Exhibits 6.6 and 6.7).

6. Perform Analysis and Write Report.

- Review roadway cut and embankment checklist (Exhibit 6.32) to ensure all appropriate information is available.
- Draft report (see outline format in Section 6.6.A).
- Refer to the general report checklist (Exhibit 6.26) and the site investigation checklist (Exhibit 6.27) to ensure appropriate report content.
- Finalize report.

On longer projects, the sampling frequency may be reduced. Therefore, more emphasis needs to be placed on carefully inspecting and assembling the field information and laboratory test results to determine sections of roadway with similar characteristics. The characteristics that are of primary importance are in-situ material properties and existing conditions. Other items (such as proposed use, surface and subsurface water, vertical and horizontal alignment (cut/fill)) can also influence the analysis. The selection of the grouping factors used to identify similarities is usually determined by problems that are likely to be encountered on a specific project. Obviously, this type of analysis requires practical experience for effective implementation. Table 6-11 provides some guidance in selecting detailed factors and conditions that may be used. Table 6-12 may be used to estimate unit weights and shrink/swell factors.

After determination of areas with similar conditions and material, engineering properties are assigned to materials for evaluation and design. These properties are determined either from direct laboratory tests or from correlated and/or assumed properties from manuals or textbooks referenced in Section 6.2. The analysis of a roadway soil investigation should concentrate on defining area limits and severity of the following problems and conditions:

- Establish design cut and fill slope ratios.
- Locate suitable materials for embankments.
- Identify shrink/swell factors for excavation.
- Identify areas requiring subexcavation.
- Locate wet areas (seepage of excessive water).
- Identify potential areas of instability.
- Determine the subgrade strength values for pavement structure design.

Table 6-11
Roadway Soils Analysis Factors

Identifying Characteristic	**Potential Problem/Condition**					
	Soil/Rock Interface	Variability of Pavement	Settlement	Frost Heave	Poor Drainage	Slope Instability
In-Situ Properties						
Soil Classification	X	X	X	X	X	X
Plasticity			X	X	X	X
Natural Moisture	X		X		X	X
Subgrade Strength		X		X		
Existing Conditions						
Standing/Seeping Water	X		X	X	X	X
Subgrade Support		X				
Pavement Thickness		X		X	X	
Slope Ratio	X					X
Pavement Distress		X	X	X	X	X

Table 6-12
Shrink/Swell Factors for Common Materials*

Material	Measured				
	In Situ	Loose		Embankment	
	Mass Density [1]	Mass Density [2]	% Swell [3]	Mass Density [2]	% Swell/Shrink [3]
Andesite	2930	1760	67	2050	43
Basalt	2935	1790	64	2160	36
Bentonite	1600	1185	35	—	—
Breccia	2400	1800	33	1890	27
Calcite-Calcium	2670	1600	67		
Caliche	1440	1245	16	1900	-25
Chalk	2410	1285	50	1810	33
Charcoal	—	610	—	—	—
Cinders	760	570	33	840	-10
Clay					
Dry	1910	1275	50	2120	-10
Damp	1985	1180	67	2205	-10
Conglomerate	2205	1660	33		
Decomposed rock					
75% R. 25% E.	2445	1865	31	2185	12
50% R. 50% E.	2225	1610	38	2375	-6
25% R. 75% E.	2005	1405	43	2205	-9
Diorite	3095	1855	67	2165	43
Diotomaceous earth	870	540	62		
Dolomite	2890	1725	67	2015	43
Earth, loam					
Dry	1795	1230	50	2090	-12
Damp	2000	1400	43	2090	-4
Wet, mud	1745	1745	0	2090	-20
Feldspar	2615	1565	67	1825	43
Gabbro	3095	1855	67	2165	43
Gneiss	2700	1615	67	1885	43
Gravel					
Dry—					
Uniformly Graded	1770	1600	10	1870	-5
Average Gradation	1945	1620	20	2120	-8
Well Graded	2180	1645	33	2450	-11
Wet—					
Uniformly Graded	1965	1870	5	1870	-5
Average Gradation	2160	1950	10	2120	-2
Well Graded	2425	2090	16	2450	-1
Granite	2695	1565	72	1880	43
Gumbo					
Dry	1915	1275	50	2120	-10
Wet	1985	1200	67	2205	-10
Gypsum	2420	1410	72		
Igneous rocks	2795	1675	67	1960	43

Table 6-12 (Continued)
Shrink/Swell Factors for Common Materials*

Material	Measured				
	In Situ	Loose		Embankment	
	Mass Density [1]	Mass Density [2]	% Swell [3]	Mass Density [2]	% Swell/Shrink [3]
Kaolinite					
Dry	1915	1275	50		
Wet	1985	1190	67		
Limestone	2600	1595	63	1910	36
Loess					
Dry	1910	1275	50	2120	-10
Wet	1985	1190	67	2205	-10
Marble	2680	1600	67	1875	43
Marl	2220	1330	67	1555	43
Masonry, rubble	2325	1395	67	1630	43
Mica	2885	1725	67		
Pavement					
Asphalt	1920	1150	50	1920	0
Brick	2400	1440	67	1685	43
Concrete	2350	1405	67	1645	43
Macadam	1685	1010	67	1685	0
Peat	700	530	33		
Pumice	640	385	67		
Quartz	2585	1550	67	1780	43
Quartzite	2680	1610	67	1875	43
Rhyolite	2400	1435	67	1700	43
Riprap rock	2670	1550	72	1870	43
Sand					
Dry	1710	1535	11	1920	-11
Wet	1835	1915	5	2050	-11
Sandstone	2415	1495	61	1795	34
Schist	2685	1610	67	1880	43
Shale	2640	1470	79	1775	49
Silt	1920	1410	36	2310	-17
Siltstone	2415	1495	61	2705	-11
Slate	2670	1540	77	1870	43
Talc	2750	1650	67	1930	43
Topsoil	1440	960	56	1945	-26
Tuff	2400	1600	50	1810	33

***Western Construction, November 1958.**

Note: [1]Kilograms per cubic meter. Subject to average ±5% variation.
[2]Kilograms per cubic meter. Mass Densities subject to adjustments in accordance with modified swell and shrinkage factors.
[3]Based on average in situ densities. A negative number represents a shrinkage. Factors subject to ±33% variation.

B. Structure Foundations. Structure foundation investigations are usually confined to the area of the substructure units. Open communication and a close working relationship with the structure design engineer is required to provide efficient, cost-effective analysis of foundations. The outline on Page 6-25 provides the basic procedural steps for a typical structural geotechnical investigation.

One of the most critical steps in analyzing structural foundations is the selection of foundation types that are applicable to specific site conditions. To systematically select or eliminate types of foundations, the following steps should be considered:

1. Identify the type of superstructure and loads to be applied to the foundation.

2. Define and summarize subsurface conditions.

3. Subjectively assess the applicability of each type of foundation for their capability of carrying the required loads and estimate the amount of settlement that is likely.

4. Eliminate obviously unsuitable foundation types and prepare detailed studies and/or tentative designs for new foundations.

5. Refer to Table 6-13 for a summary of applicable soil conditions for different foundation types. Select and recommend the foundation type that meets structure requirements, is best suited for site subsurface conditions, and is the most economical.

6. Perform an analysis to provide the structural designer with at least the following information.

   - Recommended foundation type and bottom of footing or pile tip elevations.

   - Ultimate bearing capacity of foundation unit and recommended allowable or design value with appropriate factors of safety.

   - Limitations and/or potential problems with the recommended foundation type.

   - Suitable alternative foundation types.

   - Potential construction problems and recommended construction control measures.

Recommended minimum and typical ranges for factor of safety for the geotechnical soil substructure interaction are as follows:

Shallow Foundations	**Factor of Safety**
Bearing Capacity	3.0
Sliding Along Base	1.5
Overturning (Rotational Failure)	2.0

Deep Foundations	**Factor of Safety**
Driven Piles (Static Method)	2.0-3.0
Drilled Shafts	2.0-2.5

Exhibits 6.21 and 6.22 illustrate samples of forms that are used to present allowable bearing capacities. In addition, settlement criteria should be established for specific subsurface conditions and structural requirements. The typical settlement criteria is a maximum 40 to 50 millimeter settlement that corresponds to 20 to 25 millimeter differential settlement between substructure units at allowable structural loadings.

The geotechnical unit is also responsible for ensuring that pile foundations can be installed to design requirement without damage. In situations where concrete piles, high lands or difficult installation is anticipated, dynamic pile analysis is often performed. The wave equation computer program is often used to establish installation equipment requirements and pile stress during construction. As an alternative and/or supplement to the wave equation, dynamic pile monitoring during actual installation may be used. Detailed information on these procedures, along with other detailed structural foundation analysis techniques and design procedures, are provided in FHWA Soils and Foundation Workshop Manual and Manual on Design and Construction of Driven Pile Foundations.

TYPICAL STRUCTURE FOUNDATION INVESTIGATION AND ANALYSIS PROCESS

1. Initiate Project

- Identify available preliminary information (see Exhibit 6-1).
- Obtain or review other preliminary pertinent project development information from Programming and Coordination Unit or the Project Development Unit as applicable.

2. Review Available Geotechnical Data.

- Review as-constructed plans for any existing structure at or near proposed project site.
- Review any geotechnical reports and subsurface information for structures in the vicinity of proposed site.
- Review published information (see Table 6-2). Place emphasis on localized geological and USDA soil survey information.
- Obtain bridge layout sheet from Bridge Unit.

3. Plan Field Investigation.

- Determine drilling requirements (see Tables 6-4 and 6-13).
- Review checklist for site investigation (Exhibit 6.27) to identify needed information to be collected.
- Discuss structure type and foundation requirements with bridge engineer.
- Determine preliminary equipment requirements (see Tables 6-1, 6-3, 6-5 and 6-7).
- Determine site restrictions. A site visit may be required.
- Develop a preliminary boring and testing plan (see Exhibit 6.2).

4. Plan Sampling and Testing.

- Determine sampling and testing requirements (see Tables 6-4, and 6-10).
- Make preliminary selection of applicable foundation types (see Table 6-13).
- Record field information (see Exhibits 6.3 and 6.10 through 6.15, as applicable).

5. Summarize Field Data.

- Review Table 6-9 and Exhibit 6.27.
- Summarize soil profile information (see Exhibits 6.6 and 6.7).

6. Perform Analysis and Write Report.

- Review checklist items for spread footings (Exhibit 6.28), piles (Exhibit 6.29) and drilled shafts (Exhibit 6.30) as applicable.
- Provide allowable bearing pressure (Exhibit 6.21) and pile capacity (Exhibit 6.22) as applicable.
- Refer to the General Report Checklist (Exhibit 6.26) and the Site Investigation Checklist (Exhibit 6.27) to ensure appropriate report content.
- Finalize report.

Table 6-13
Preliminary Foundation Type Selection

Foundation Type	Use	Applicable Soil Conditions
Spread Footing	Individual columns, walls, bridge piers.	Any conditions where bearing capacity is adequate for applied load. May use on single stratum; firm layer over soft layer or soft layer over firm layer. Check immediate, differential, and consolidation settlements.
Mat Foundation	Same as spread and wall footings. Very heavy column loads. Usually reduces differential settlements and total settlements.	Generally soil bearing value is less than for spread footings; over one-half area of building covered by individual footings. Check settlements.
Friction Piles	In groups to carry heavy column, wall loads. Requires pile cap.	Low strength surface and near surface soils. Soils of high bearing capacity 18 - 45 meters below ground surface, but by disturbing load along pile shaft solid strength is adequate. Corrosive soils may require use of timber or concrete pile material.
End Bearing Piles	In groups (at least 2) to carry heavy column, wall loads. Requires pile cap.	Low strength surface and near surface soils. End of pile located on soils 7.5 to 30 meters below ground surface.
Drilled Shafts (End bearing)	Larger column loads than for piles but eliminates pile cap by using caissons as column extension.	Low strength surface and near surface soils. End of shaft located on soils 7.5 to 30 meters below ground surface.
Sheetpile	Temporary retaining structures for excavations, alloy waterfront structures, cofferdams.	Any soil. Waterfront structures may require special or corrosion protection. Cofferdams require control of fill material.

C. Retaining Walls. Retaining walls are a specialized structure; therefore, comments and guidelines given in Section 6.4.B are relevant to retaining wall analysis. The outline following Section 6.4.C provides the basic procedural steps, thought process, and initial source of reference and standard forms for a typical geotechnical retaining wall investigation. Many different wall types are available. See Chapter 9, Section 9.4.D and Chapter 10, Section 10.4.K for retaining wall designs.

The numerous proprietary wall designs require review and comparisons of specific wall design parameters. When proprietary wall designs are suitable for specific site conditions, alternative bid procedures are recommended. To ensure that these alternatives are equal, a review by the geotechnical unit prior to advertisement of the construction contract is required. Designs submitted for approval must contain all calculations and assumptions made by the proprietary wall design. Include with the submittal, copies of any computer programs used. The computer programs shall be in a format compatible with Government equipment. Major points of comparison will include but are not restricted to the following items:

- Design life.
- Maximum total and differential settlements.
- Maximum stress in wall members.
- Magnitude and direction of external loads.
- Surface and subsurface drainage required.
- Backfill quantity and quality requirements.
- Previous experience with other highway applications.

An overview of the basic retaining wall fundamentals and procedures can be reviewed in the Forest Service's Retaining Wall Design Guide. Manufacturers' design charts should only be used as preliminary estimates, and final wall design should be checked by the geotechnical staff. When information is not provided or is unsubstantiated, Rankine analysis and conservative values should be used. See Chapter 10, Section 10.4.K, for safety factors and other critical design elements applicable to walls. In addition, consider the following when analyzing retaining wall foundation and backfills.

- Do not include material in the upper 1.5 meters in front of the wall when evaluating resistance to sliding along the base and overturning.

- The resultant of all forces acting on the wall should fall within the middle third of the base.

- Live loads due to temporary construction activities (materials and equipment) and traffic loading should be in the order of 11 to 17 kPa.

- Avoid backfill material such as silts and clays unless special precautions and analyses are made to account these materials.

- Evaluate expected settlements to ensure that their magnitudes are consistent with the rigidity of the type of wall selected.

- Evaluate subsurface and surface drainage requirements and include any specifications in the geotechnical analysis and recommendation.

TYPICAL RETAINING WALL INVESTIGATION AND ANALYSIS PROCESS

1. Initiate Project

- Identify available preliminary information (see Exhibit 6.1).
- Determine specific site requirements such as wall location, heights, and aesthetic restrictions.

2. Review Available Geotechnical Data.

- Review any geotechnical reports and information for project location.
- Review published information (see Table 6-2).
- Review Geotechnical Engineering Notebook retaining wall chapters.
- Obtain survey information such as cross sections and plans from the Design Unit.

3. Plan Field Investigation.

- Determine drilling requirements (see Table 6-4).
- Review checklists for site investigations (Exhibit 6.27) and retaining walls (Exhibit 6.31) to identify needed information to be collected.
- Determine preliminary equipment requirements (see Tables 6-1, 6-3 and 6-5).
- Determine site restrictions and revise equipment requirements. A site visit may be required.
- Develop a preliminary boring and testing plan (see Exhibit 6.2).

4. Plan Sampling and Testing.

- Determine sampling and testing requirements (see Tables 6-4, 6-6 and 6-10).
- Record field information (Exhibits 6.3 and 6.10 through 6.15, as applicable).

5. Summarize Field Data.

- Review Table 6-9 and Exhibit 6.27.
- Review checklists for general report (Exhibit 6.26) or site investigation (Exhibit 6.27) as appropriate.

6. Perform Analysis and Write Report.

- Review checklists for retaining walls (Exhibit 6.31) and spreadfootings (Exhibit 6.28), piles (Exhibit 6.29), or drilled shafts (Exhibits 6.30) if applicable.
- Provide allowable bearing pressure (Exhibit 6.21) and pile capacity (Exhibit 6.22) as applicable.
- Write draft report.
- Refer to the General Report Checklist (Exhibit 6.26) and the Site Investigation Checklist (Exhibit 6.27) to ensure appropriate report content.
- Finalize report.

D. Pavement Design. The pavement design procedures used by FLH Divisions use empirical data developed from the AASHO road tests and modified by experience gained from pavements built for use on Federally owned lands. The concepts are based upon procedures presented in the AASHTO Interim Guide for Design of Pavement Structures 1972, revised 1981. It is anticipated that the new concepts and procedures presented in the 1993 AASHTO Guide for Design of Pavement Structures will eventually be incorporated into the Federal Lands Highway pavement design procedures. Until such time, correlation between the existing procedures and the new procedures presented in the new AASHTO manual is encouraged to establish a data base for the purpose of confirming the reliability, standard deviation, and changes in serviceability input parameters required by the new procedures.

Pavement designers should familiarize themselves with the DARWIN computer program. This program incorporates the design procedures provided in the AASHTO Guide for Design of Pavement Structures 1993.

Generally, only flexible pavements are built by FLH Divisions and therefore this section will deal primarily with flexible pavement design procedures. When rigid pavements are required and designed, the procedures and guidelines used in the AASHTO Design of Pavement Structures 1993 are to be followed.

The outline on the following page provides the basic procedural steps, initial sources of reference materials, and standard forms for a typical pavement design investigation.

TYPICAL PAVEMENT DESIGN INVESTIGATION AND ANALYSIS PROCESS

1. Initiate Project

- Identify available preliminary information (see Exhibit 6.1).
- Obtain project related restrictions (costs, aesthetics, environmental etc.) imposed by others by reviewing preliminary project development information.

2. Review Available Geotechnical Data.

- Review any geotechnical reports and information for project location.
- Review published information (see Table 6-2) with emphasis on USDA soil surveys for project site.
- Determine thickness of the existing pavement, and identify initial design material properties.

3. Plan Field Investigation.

- Determine drilling requirements (see Table 6-4).
- Review Pavement Design Checklist (Exhibits 6.33) to identify needed information to be collected.
- Determine preliminary equipment requirements (see Tables 6-1, 6-3, and 6-5).
- Develop a preliminary boring and testing plan (see Exhibit 6.2).

4. Plan Sampling and Testing.

- Determine sampling and testing requirements (see Tables 6-4, 6-6, 6-11 and 6-15).
- Record field information (Exhibits 6.16, 6.17 and 6.18 as applicable).

5. Summarize Field Data.

- Review Tables 6-14 and 6-15.
- Summarize soils and other data as appropriate (see Exhibits 6.6, 6.7, 6.8 and 6.9).
- Prepare Exhibit 6.6 or 6.7 and Exhibit 6.8 or 6.9 as applicable.

6. Perform Analysis and Write Report.

- Review the pavement design checklist (Exhibit 6.33) to ensure all appropriate information is available.
- Document the pavement design parameters (Exhibits 6.23, 6.24, and 6.25) as applicable.
- Write draft report.
- Refer to the General Report Checklist (Exhibit 6.26) and the Site Investigation Checklist (Exhibit 6.27) to ensure appropriate report content.
- Finalize report.

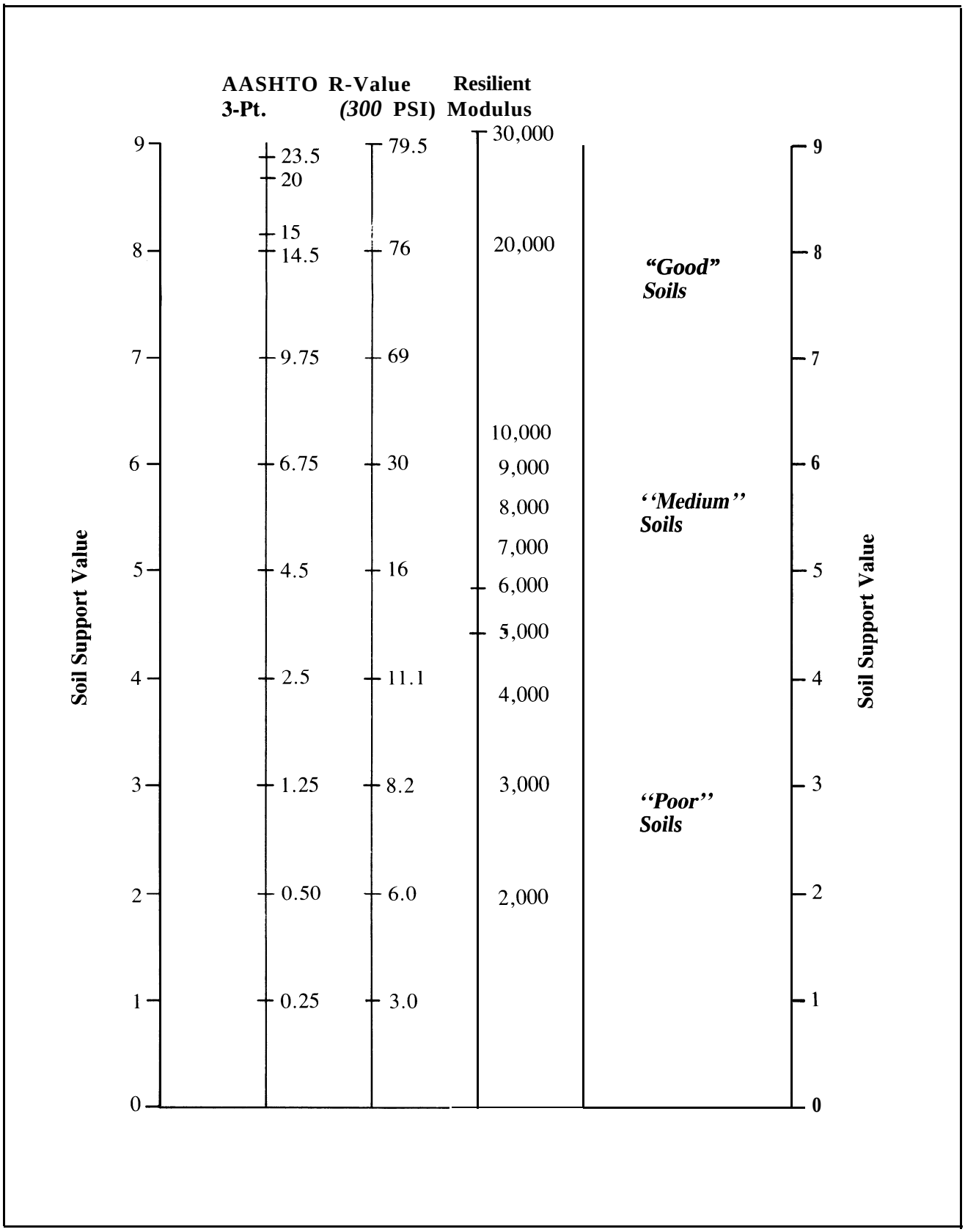

Table 6-14
Soil Support Correlations

1. New and Reconstructed Pavement Design. Design of the new flexible pavements requires (1) traffic data analysis, (2) existing soils strength determinations, (3) site specific environmental data, (4) strength and durability characteristics for the new materials to be used in construction, and (5) a system to combine these inputs to provide pavements for all types of roadways. The information provided here should be considered a guideline and is subject to revisions and deviation based upon new developments and sound engineering judgment and analysis.

a. Traffic Analysis. Detailed analysis of traffic requires loadometer data and breakdown of annual daily traffic for specific vehicle types and axle arrangements. Detailed examples of the procedures are given in Appendix C.2 of the AASHTO Interim Guide for Design of Pavement Structures. This type of information is not often available on FLH roads. Therefore, simplified traffic analysis is often used. Annual Daily Traffic (ADT) is estimated and the estimated percentage of major vehicle types is combined with Equivalent 80 kN Axle Loads (EAL) to determine an EAL/day to represent all traffic data.Typical EAL values for common vehicles are:

Type of Vehicle	Typical Values
Automobile	0.0004
Recreation Vehicle	0.20
Light Truck	0.20
Heavy Maintenance Truck	0.60
Logging Truck	2.30
Bus	0.88

In lieu of other data, typical values used in traffic analysis for FLH pavements are (1) 20 year design periods and (2) 2-percent growth factors and minimum 5 EAL/days.

b. Soil Strengths. Existing subgrade soil strengths are evaluated by using the soil support correlation values. Three acceptable methods of obtaining soil support values are listed:

- 3-point (CBR) test.
- Resilient Modulus (M_r) test.
- HVEEM Resistance (R) test.

The design soil support values can be determined from a percentile evaluation, an average, or a minimum value, depending upon the situation and allowable risk of premature or localized pavement distressed areas. However, it is recommended that the eightieth percentile and Table 6-14 be used to determine soil support values. The following can be used as a general guide for subgrade soil conditions.

Soil Type	Soil Support Value
Poor Soils	0 - 4
Medium Soils	4 - 6.5
Good Soils	6.5 - 10

c. Environmental Considerations. The site specific environmental data is evaluated by using regional factors. The basic components are precipitation, drainage, and elevation. Table 6-15 may be used to determine a site specific environmental regional factor.

These factors should be adjusted for other conditions such as seasonal traffic loads, subgrade frost heave potential, and subgrade shrink/swell potential.

d. Construction Material Strengths. The different construction material strengths are evaluated by using a structural coefficient. The ranges of structural coefficients (SC) for material used on FLH projects are shown in Exhibit 6.25.

For other material types, typical Structural Coefficient (SC) values may be found in the AASHTO Interim Guide or may be estimated from:

$$SC = 0.14 - 0.006(83 - R)$$

Where:

R = R-value determined at 2070 kPa exudation pressure (AASHTO T 190).

e. Serviceability. Generally, FLH roads should be designed for a terminal serviceability index of 2.0. However, roads with ADT's greater than 500 and/or roads considered primary routes may be designed using a terminal serviceability index of 2.5.

These elements are combined by using the design charts and procedures provided by Exhibits 6.23 and 6.24. Actual layer thickness is determined by using Exhibit 6.25 to satisfy the required structural number (SN).

For new construction, recommended minimum thicknesses of pavement structure materials are the following:

Type of Material	Thickness (mm)
Asphaltic concrete pavement	50
Aggregate base course	150

Table 6-15
Regional Factor Guidelines for Pavement

Precipitation		Elevation		Drainage	
Millimeters	**Factor (P_f)**	**Meters**	**Factor (E_f)**	**Condition**	**Factor (D_f)**
< 250	0	< 2000	0	Good	0
≥ 250 to <325	0.25	≥ 2000 to <2300	0.25	Fair	0.50
≥ 325 to< 425	0.50	≥ 2300 to <2600	0.50	Poor	1.0
≥ 425 to <600	1.0	≥ 2600 to <2900	1.0	Severe	2.0
≥ 600	1.5	>2900	1.5		

Note: Total Regional Factors (RF) = $P_f + E_f + D_f$

2. Pavement Overlay Design. Four different design methods are used to design pavement overlays. These are the minimum thickness, engineering judgment, structural deficiency, and deflection based methods. Generally, the method used on any given design problem will be dictated by the information available to the designer. If more than one design method is practical, the overlay should be checked by the other available methods.

a. Minimum Thickness. Very thin pavement overlays tend to tear and separate from the underlying pavement during construction and are almost impossible to construct. If an overlay is not intended to serve any structural purpose, but only to correct a surface defect in the pavement, no further design is necessary and the overlay can be the minimum thickness. If, however, the overlay will serve a structural purpose, another design method must be used to determine thickness requirements.

A 50 millimeter lift of asphaltic concrete pavement is normally the minimum depth of overlay for structural improvement. Overlays less than 50 millimeters but no less than 20 millimeters may be used under the following conditions:

- Additional structural capacity is not required for the section proposed for resurfacing.

- The primary function of the overlay is to improve the surface properties of the roadway (skid, noise, and riding quality adversely affect operational safety characteristics).

b. Engineering Judgment. If a designer has extensive experience with pavements that are similar to the one being overlayed, it may be possible to arrive at the required design thickness by applying engineering judgment. While in the hands of an experienced engineer this method can yield good results, it is still little more than an educated guess. Therefore, using engineering judgement as the prime design method should be limited to those projects so small that it is uneconomical to gather the data for a more sophisticated approach. On the other hand, engineering judgment should always be used to check the reasonableness of the results of the more analytical methods.

c. Structural Deficiency. The structural deficiency method consists of finding the structural number that would be required of a new pavement to support the design traffic and then subtracting the structural number of the existing pavement from it. The structural deficiency method can be summarized in these two equations:

$$SN_O = SN_N - SN_E$$

$$SN_O = a_O D_O$$

Where:

SN_O = Structural No. for the proposed overlay
SN_N = Structural No. for a new pavement
SN_E = Structural No. for the existing pavement
a_O = Layer coefficient for the overlay material
D_O = Overlay thickness in millimeters

SN_N, the structural number required for a new pavement, can be computed using the standard pavement design methods. Unfortunately, there is no such single, clear-cut way to compute SN_E. There are several semiempirical methods, but their use must be tempered with good judgment and, when possible, checked against one another. To a large extent, the accuracy of the structural deficiency method is dependent upon the accuracy of SN_E.

d. Deflection and Mechanistic Based Method. This method uses dynamic deflection measurements to estimate the condition of the existing pavement and the thickness of the required overlay. The first step in the design process is to take deflection measurements periodically along the roadways to be overlayed. Generally, a measurement is taken every 150 meters along the roadway in each traveled lane. The measurements in adjacent lanes should be staggered by 75 meters so that the maximum roadway coverage can be achieved.

These are only guidelines, however, and can be varied if there is reason to believe that the existing pavement is more or less variable than usual.

DARWin provides an overlay design methods based upon deflection analysis and back calculation. Other mechanistic based design and back calculation programs are also available. The thickness of the full depth asphalt needed to sustain the design traffic is found by processing the deflection data through the computer program. The required overlay thickness can then be computed from the following formula:

$$T_O = T_D - T_E$$

Where:

T_O = Overlay thickness
T_D = Design thickness for new pavement
T_E = Equivalent existing pavement thickness

3. Pavement Rehabilitation Design Other Than Overlay. The following are some of the major rehabilitation methods used as non-overlay techniques:

- Full-depth repair
- Partial-depth patching
- Crack sealing
- Subsealing
- Milling
- Wedge and leveling
- Subdrainage
- Surface treatments
- Recycling

Descriptions of these methods can be found in the AASHTO Guide for Design of Pavement Structures 1993, FHWA Pavement Rehabilitation Manual, and numerous Asphalt Institute publications dealing with specific techniques. Exhibits 6.16, 6.17, and 6.18 may be used to collect and document pavement distress.

E. Material Sources. The outline following Section 6.4.E. provides the basic procedural steps, initial source of reference material, and standard forms for a typical material source investigation. Commercial sources do not normally require an investigation.

The analysis of potential material sources often presents unusual and site specific problems that require coordination with environmental planning sections as well as the project designer. Detailed investigations are sometimes limited by access and/or lack of detailed site information. A concentrated effort should be made to fully investigate and analyze each material source. Excavation with backhoe and/or core (auger) borings should outline boundaries of the proposed source and should extend at least 3 meters beyond the expected floor elevation of the source. The remainder of the source should then be proven out by additional borings and/or excavations.

For typical FLH projects, 4 to 6 bore holes and 2 to 4 complete sets of aggregate quality tests are required.

The total quantity of materials available from all material sources provided for a specific project should be 10 to 20 percent in excess of the project needs.

A material source investigation should provide the following minimum information:

- Expected quality of processed materials and procedures necessary to obtain that quality.

- The boundary limits of proven materials and limits of previously used areas.

- Specific areas and elevation of nonusable materials.

- Previous uses of material from the source.

- Recommendations on uses and limitations for processed materials.

- Listing of potential development, processing, and handling problems that may occur during construction.

TYPICAL MATERIAL SOURCE INVESTIGATION AND ANALYSIS PROCESS

1. Initiate Project.

- Identify available preliminary information (see Exhibit 6.1).
- Review local permit requirements.

2. Review Available Geotechnical Data.

- Review previous material source geotechnical reports in vicinity of proposed project.
- Review published information (see Table 6-2) with emphasis on geological surveys.
- Identify locations of existing commercial sources in the vicinity.
- Obtain survey contour map and/or site specific cross sections.

3. Plan Field Investigation.

- Determine drilling requirements (see Table 6-4).
- Review checklists for site investigations (Exhibit 6.27) and material source investigation (Exhibit 6.34) to identify information to be collected.
- Determine preliminary equipment requirements (see Tables 6-1, 6-3 and 6-7).
- Determine site restrictions and revise equipment requirements. A site visit may be required.
- Develop a Preliminary Boring and Testing Plan (see Exhibit 6.2)

4. Plan Sampling and Testing.

- Determine sampling and testing requirements (see Tables 6-4, 6-6, and 6-10).
- Record field information (Exhibits 6.3 and 6.10 through 6.15 as applicable).

5. Summarize Field Data.

- Summarize soils and boring data as appropriate (Exhibit 6.7).

6. Perform Analysis and Write Report.

- Review the Material Source Investigation Checklist (Exhibit 6.34) to ensure all appropriate information is available.
- Write draft report. See outline format in Section 6.6.A.
- Refer to the General Report Checklist (Exhibit 6.26) and the Site Investigation Checklist (Exhibit 6.27) to ensure appropriate report content.
- Finalize report.

F. Landslide Analysis. Landslide analysis is perhaps one of the more difficult types of geotechnical analyses due to the variable size and complexity of landslides. TRB Landslide Investigation & Mitigation provides a basis for analysis techniques and requirements. It is essential that survey information extend beyond the landslide limits to provide detailed analysis. For most Federal Lands Highway projects, the total size of the landslide and costs of correction must be subjectively evaluated in relationship to potential costs of noncorrection before detailed investigations are authorized and initiated.

The outline following Section 6.4.F. provides the basic procedural steps, initial source of reference material, and standard forms for a typical landslide investigation.

Factor of safety for landslide analysis should vary with the type of facility, potential damages, amount and quality of soil strength data, and size of the landslide. In addition, the reliability of site specific rainfall and ground water level should be considered. Generally, a factor of safety in the 1.25 to 2.0 range is used, with an FS = 1.3 being most common. Use of low-cost methods such as alignment shifts, grade changes, horizontal drains, rock buttresses, and excavation to remove driving forces should be routinely considered.

Information required from landslide analysis should include the following:

- Physical limits and dimensions of the landslide.
- Listing of probable causes for landslide.
- Magnitude and rate of existing movements.
- Recommendations for corrective actions and evaluation of future risk.

TYPICAL LANDSLIDE INVESTIGATION AND ANALYSIS PROCESS

1. Initiate Project.

- Identify available preliminary information (see Exhibit 6.1).
- Identify project related restrictions (financial, aesthetic, environmental, etc).

2. Review Available Geotechnical Data.

- Review all previous geotechnical reports and information for specific project.
- Review published information (see Table 6-2).
- Identify landslide problem history of the general area, and determine site specific history.
- Obtain survey information such as contour maps, cross sections and plans.

3. Plan Field Investigations.

- Determine drilling requirements (see Table 6-4).
- Review checklists for landslide correction (Exhibit 6.35) to identify needed information to be collected.
- Determine preliminary equipment requirements (see Tables 6-1, 6-3, 6-5, and 6-7).
- Identify site access restrictions, and revise equipment requirements accordingly. A site visit may be necessary.
- Develop a Preliminary Boring and Testing Plan (see Exhibit 6.2).

4. Plan and Sampling Testing.

- Determine sampling and testing requirements (see Tables 6-4, 6-6 and 6-10).
- Appraise the need for in-situ testing and long-term monitoring devices.
- Record field information (Exhibits 6.3 and 6.10 through 6.15 as applicable).

5. Summarize Field Data.

- Summarize soil profile information (see Exhibit 6.6 and 6.7).

6. Perform Analysis and Write Report.

- Review the Landslide Correction Checklist (Exhibit 6.35) to ensure all appropriate information is available.
- Perform appropriate analysis.
- Write draft report (see outline in Section 6.6.A).
- Refer to the General Report Checklist (Exhibit 6.26) and the Site Investigation Checklist (Exhibit 6.27) to ensure appropriate report content.
- Finalize report.

G. Subsurface Drainage. The presence of saturated soils or shallow ground water may produce adverse effects on the construction and maintenance of roadways and embankments. The sources of this subsurface water may be free water penetrating the subsurface due to the force of gravity, capillary water that moves upward through the underlying soil strata as a result of capillary action, or water vapor moving upward through the subgrade soil strata as a result of thermal gradients. In general, these adverse effects of excessive subsurface water cause slope failures including the sloughing and sliding of cut and fill slopes, and unsatisfactory pavement performance as manifested in premature rutting, cracking, faulting, increasing roughness, and a relatively rapid decrease in the level of serviceability.

This damage may be caused in various ways, including the following:

- **Weakening.** When a roadbed is wholly or partly saturated, the application of dynamic loadings causes increased pore pressures, and these reduce the internal friction and lower resistance to shearing action.

- **Buoyancy.** The buoyant effect of the water reduces the weight of the particles and correspondingly lowers the friction between them.

- **Expansion.** The volume of some soils is greatly increased by added water, causing differential heaving and weakening of the pavement structure.

- **Frost Heave.** Freeze-thaw activity related to water in or under a pavement structure is the most common cause of volume changes leading to pavement break-up and potholes.

Prevention of subsurface water problems in highway engineering may be accomplished by either selective highway location, replacement of poor soils and the use of select, free draining, granular subbase materials, or by using subsurface drainage systems. This chapter will only discuss design guidance for subsurface drainage systems. The functions of subsurface drainage are to reduce the previously mentioned adverse effects on roadways. These functions are more specifically stated in terms of the following requirements:

- To draw-down or lower a highway water table in the area of a highway, parking lot, or other type of transportation improvement project.

- To eliminate active springs or seeps beneath the pavement by intercepting the seepage above an impervious boundary.

- To drain surface water infiltrating into the structural section by the following:

  - Through a pervious pavement.
  - Through cracks, joints, or other breaks in the continuity of the pavement and shoulder surfaces.
  - From an improperly-drained median area.
  - From side ditches.

- To collect discharge from other drainage systems.

In order to design a reliable, economic and adequate subsurface drain, it is desirable to collect the following information:

- Determine, during the preliminary soil survey, the location of all seepage areas that may cause water to enter the structural elements of the pavement.
- Determine the maximum rate of flow of water that may enter the structural section from any seepage and infiltration.
- Find the location of a source of aggregate suitable for filter material to prevent clogging of drains by water-borne soil, or determine the suitability of using a filter fabric.
- Determine source of aggregate which, if needed, may be used as drainage blanket to remove the water from beneath the pavement.
- Obtain and evaluate climatic data with respect to frost heaving.

The most common way of identifying subdrainage systems is in terms of their location and geometry. The most familiar classifications of subsurface drainage systems include underdrains, horizontal drains, drainage blankets, and wells.

1. Underdrains. These subsurface drains are categorized as longitudinal drains if they are located parallel to the roadway centerline (both in the horizontal and vertical alignment) and as transverse drains if they run beneath the roadway either at right angles to the roadway centerline or skewed in the so-called "herringbone" pattern. These drains are located not only at the edge of or under the pavement, but may also act as interceptor drains in wet cut slopes. Typically, these drains involve a trench of substantial depth, a collector pipe, free draining aggregate, and a protective filter fabric of some kind.

The function of fabrics as filters is to allow removal of ground water without the build-up of excessive seepage forces or water pressures. The fabric must also prevent piping or subsurface erosion of the soil. In these applications, water flows across the filter into a water-conducting medium, which is usually a trench filled with a free draining aggregate and a slotted or perforated pipe that quickly removes the water. Geotechnical filter fabrics are manufactured from a number of different materials, including polypropylene, polyester, nylon, polyethylene, and polyvinylidene chloride.

For details concerning specifications for various kinds of underdrain pipe, free draining aggregate and filter fabrics, refer to the references in Section 6-2.

In lieu of pipe underdrains, the use of prefabricated drainage systems (geocomposite drains) for subsurface drainage is increasing rapidly. Variables that should be considered in the design of a geocomposite drain application are drain orientation, in-situ stress, temperature, hydraulic conditions, potential for clogging, permeability, and chemical resistance.

Depending on the source of subsurface water and the function of the drain, less sophisticated underdrains may be used. These may include "french drains," consisting of a shallow trench filled with open graded aggregate, or a deep trench drain with filter fabric enveloping an open graded aggregate. Exhibits 6.36 through 6.40 show various underdrain details. These drains perform the basic requirement of carrying off all water entering the system by using a protective filter medium to prevent clogging of the drain.

2. Horizontal drains. This drainage system consists of horizontal pipes drilled into cut slopes or fill slopes to tap springs and relieve porewater pressures. The skew and inclination of horizontal pipes must be determined on a project-by-project basis, and may have to be adjusted in the field as groundwater is encountered. In ordinary installation, the ends of the perforated, small diameter drain pipes are simply left projecting from the slope and the flow is picked up in drainage ditches.

In more elaborate installations, however, drainage galleries or tunnels may be required to carry the large flows, and some type of pipe collector system may be used to dispose of the water outside of the roadway limits.

3. Drainage blankets. Drainage blankets are applied as a very permeable layer, the length (in the direction of flow) and width of which are large relative to its thickness. Drainage blankets used in conjunction with a longitudinal drain can help to improve the surface stability and thus relieve sloughing of cut slopes by preventing the development of a seepage surface. Horizontal drainage blankets can be used beneath or as an integral part of the pavement structure to remove water from infiltration or to remove ground water from both gravity and artisan sources.

Although relatively pervious granular materials are often used for base and subbase courses, these layers will not function as drainage blankets unless they are specifically designed and constructed to do so. This requires an adequate thickness of material with a very high coefficient of permeability, a positive outlet for the water collected, and in some instances the use of one or more protective filter layers.

4. Wells. Wells can be used to control the flow of ground water and relieve pore water pressures in potentially unstable highway slopes. Wells are sometimes used in conjunction with another drainage system to penetrate an impervious layer that prevents or hinders the necessary percolation of subsurface water.

6.5 APPROVALS. (Reserved)

6.6 GEOTECHNICAL REPORTS

The purpose of geotechnical reports is to transmit and document all pertinent geotechnical information in a systematic, concise format with specific design recommendations and alternatives. Pertinent information should consist of site specific physical, environmental, and geological data (field boring logs); station by station field notes; geophysical field data; material properties laboratory test results; discussion of analyses used; listing of all major assumptions and/or data used for analyses; and design and construction recommendations.

Reports are primarily intended for highway designers but are also made available to project construction personnel and prospective bidders.

A. Report Structure and Outline. All geotechnical reports should be consistent and organized to follow the same general structure to allow for familiarity by even the occasional reader. The following topic areas should be considered for final reports:

- Introduction
- Procedures and Results
- Analysis
- Discussion
- Recommendations
- Appendixes and Attachments (as required)

The introduction section of the geotechnical report should contain information as to the specific location of the project site, the purpose of the report, authorization for the work, and any limitations and restrictions that may apply.

Include a review of the project and history of the site as background information when it is relevant to the investigation and/or proposed project.

The procedures and results reported should basically contain information as to what field procedures and tests were performed and what engineering values were determined from the test results. Discuss the existing conditions and pertinent geological setting and features in the report. Use data summaries, tables, and charts whenever possible. Document any previous report and/or other specific references used to generalize conditions, estimate engineering parameters, and develop recommendations. Include all test data (both field and laboratory) in the report and reference in the appropriate appendixes.

The analysis section of a geotechnical report should contain information as to what type of analyses were performed. When appropriate, include the applicable analysis procedures, including limitations and pertinent assumptions.

The discussion section of the report should draw upon all the previously mentioned sections and present the various possible alternative solutions that were considered for each specific feature or project. Include a general discussion that communicates the major advantages and disadvantages of each alternative.

Recommendations in the report should be concise and directed to the preferred alternative. All detailed information necessary to design and construct the recommended alternative should be provided and all reference literature cited. Identify areas where special treatment may be required and make recommendations on the type of treatment or corrective action to be taken.

The appendixes of a geotechnical report should contain all detailed laboratory test results, boring logs, and field test data used to generate the report. Specific calculations would not normally be included, but all standard terminology and reference charts used to prepare the report may be included.

The following is the generalized geotechnical outline guide:

- Title page
- Table of contents
- Introduction
- Procedures and results
- Analysis
- Discussion
- Recommendations
- Attachments - Location map, drawings, etc.
- Appendix A - Field bore/core log
- Appendix B - Laboratory test results
- Appendix C - Geophysical test results
- Appendix D, etc. - Photographs, miscellaneous test results and/or information as deemed necessary

B. Checklists. As a guide to ensure that all pertinent items are considered in geotechnical reports, checklists have been prepared from FHWA's 1985 publication Checklist and Guidelines for Review of Geotechnical Reports and Preliminary Plans and Specifications. These checklists are presented in Exhibits 6.26 through 6.35. The checklists are intended to be used primarily by reviewing and approving officials. Therefore, all geotechnical project engineers and geologists preparing reports should become very familiar with the contents, concepts, and procedures presented in the checklists. Exhibits 6.26 and 6.27 contain information that is generally common to all geotechnical reports. Exhibits 6.28 through 6.35 are to be used for specific items addressed in specialized geotechnical reports.

C. Standard Forms. Geotechnical forms that are common to all Federal Lands Highway Divisions have been standardized and are presented in Exhibits 6.1 through 6.25. Completed examples of the more routinely used forms are also included within these exhibits.

6.7 DIVISION PROCEDURES

Reserved for Federal Lands Highway Division office use in supplementing the policy and guidelines set forth in this chapter with appropriate Division procedures and direction.

LIST OF EXHIBITS

Exhibit

6.1 Preliminary Information for Geotechnical Investigations . . . . (In separate & CADD files)
6.2 Preliminary Boring and Testing Plan
6.3 Bore Log
6.4 Bore Log Terminology
6.5 Field Classifications for Soil and Rock
6.6 Interpreted Design Soil Profile
6.7 Soils and Foundation Plan and Profile Sheet
6.8 Summary of Soil Survey
6.9 Summary of Water Problem Areas
6.10 Field Mapping - Rock Structures
6.11 Cone Penetrometer Data
6.12 Seismograph Data Sheet
6.13 Resistivity Data Sheet
6.14 Bore Hole Shear Test
6.15 Inclinometer Data
6.16 Pavement Bore Log
6.17 Asphaltic Concrete Pavement Condition Survey
6.18 Portland Cement Concrete Pavement Condition Survey
6.19 General Rock Slope Design Criteria
6.20 Estimation of Rippability from Seismic Wave Velocities
6.21 Allowable Bearing Pressure for Spread Footings
6.22 Allowable Pile Capacity
6.23 Design Chart for Flexible Pavements - Pt = 2.0
6.24 Design Chart for Flexible Pavements - Pt = 2.5
6.25 Pavement Structure Layer Thickness Worksheet
6.26 General Report Checklist
6.27 Site Investigation Checklist
6.28 Spread Footing Checklist
6.29 Piles Checklist
6.30 Drilled Shaft Checklist
6.31 Retaining Wall Checklist
6.32 Roadway Cut and Embankment Checklist
6.33 Pavement Design Checklist
6.34 Material Source Investigation Checklist
6.35 Landslide Correction Checklist
6.36 Typical Underdrain Installation for Roadbeds and Ditches
6.37 Typical Underdrain Installation in Embankment Areas
6.38 Typical Underdrain Installation Beneath the Roadbed
6.39 Typical Underdrain Installation for Spring Areas
6.40 Typical Underdrain Installation for Backslopes

Preliminary Information for Geotechnical Investigations

Project: _____ Date: _____

Account Number: _____ Estimated quantity needed: _____

Funding: _____ Information needed by: _____

Type of Investigation? Structure Foundation Roadway Slope Analysis Materials Source

Landslide Other _____

Report Type? Preliminary Final Informal Formal

Site Specific Information

Location: _____

Termini: _____ To: _____

Field Reference Available (stakes, MP, etc.):_____

Terrain/Access? Easy Moderate Difficult Very Difficult

Utilities? Water Electric Telephone Unknown

Local Contacts:

Agency Name:_____ Property Owner: _____

Address: _____ Address: _____

Telephone: _____ Telephone: _____

Additional Information Needed By Geotechnical

Mapping? Not Available Availability Date:_____

Structure Foundation Projects

Structure Type: _____ Bridge Spans (No. & Length)_____

Max. Wall Height: _____ Max. Loads Expected: _____

Availability of Preliminary Plans:_____

Restrictions:_____

Comments: _____

Roadway Projects

Type? Overlay Widening Reconst. New Alignment Other

Pavement Surface Type: _____

Traffic Data Availability: Where? _____ When? _____

Restrictions: _____

Comments:_____

Material Source Projects

Use of Material? A.C. Pavement Base Borrow Other _____

Amount Needed: _____ _____ _____ _____
(cubic meters)

Suggested Source: _____

Previous Use: _____

Slope/Landslide Projects:

History/Maint. Problems: _____

Estimated Max. Movement Per Year: _____

Previous Correction Attempts:_____

Initial Correction Concepts:_____

Estimated Number of Holes:

Depth: _____ Backhoe or Dozer work required?_____

Is Water Available? _____ How Far? _____

Estimated Conditions:_____

EXHIBIT 6.1 Preliminary Information for Geotechnical Investigations

Preliminary Boring and Testing Plan

Project _____

Account Number: _____

Driller: _____ **Engr/Geol:** _____

Location (station/offset)	Power Auger			Backhoe Depth	Hand Auger Depth	Pene-trometer Cone Depth	Seismic Line Length	Resistivity Maximum Spacing	Other Tests or Remarks
	Depth	SPT	Shelby Tube						

EXHIBIT 6.2 Preliminary Boring and Testing Plan

Sample Bore Log

Project Name:		Boring No.	Date	Sheet of
Boring Location:		Type of Boring		
Drill:	Driller:	Casing Used	Size	
Field Logged By;		Boring Began:		Completed:
Revisions/Final By:		Ground Elev.		Weather:

Run or Sample Number	Depth From: To: (In Meters)	Core Length Recovered / % Recovered	RQD / Fracture Spacing	SPT Blows per 150 mm	Lab Test / Adjusted SPT (N') per 0.3 m	Water Depth: / Date/Time / Description: (Density, Color, Type, Moisture, Other)

EXHIBIT 6.3 Bore Log
(page 1 of 2)

Sample Bore Log

Project Name: WA FH101 Cascade Rd.		Boring No. 1	Date: 1/12/95	Sheet 1 of 1
Boring Location: 30m Lt: of P–103 stake		Type of Boring Auger	Drilling Mud Used From To
Drill: CME 75	Driller: P. Sloan	Casing Used N/A	Size
Field Logged By: P. Sloan		Boring Began: 1/12/95	Completed: 1/12/95
Revisions/Final By: D. Lofgren		Ground Elev.	Weather: Fair/Cold

Run Or Sample Number	Depth From: To: (in meters)	Core Length Recovered % Recovered	RQD Fracture Spacing (mm)	SPT Blows per 150mm	Lab Test Adjusted SPT (N') per 0.3m	Water Depth: 5.8 / Date/Time 4 P.M. 1/12	5.8 / 7 A.M. 1/13	6.4 / 7 A.M. 1/17 — Description: (Density, Color, Type, Moisture, Other)
1	0 / 0.8	– / –	– / –			Augered topsoil		
2	0.8 / 1.2	0.4 / –	– / –	3 6 8		Firm, dark brown silt with some clay		
3	1.2 / 2.3	– / –	– / –			Same as above. More difficult near 2m		
4	2.3 / 2.7	0.1 / –	–	12 50+		Very dense, brown, decomposed rock with some silt. Auger refusal at 2.7m Begin Core.		
5	2.7 / 4.6	1.2 / 63	0 / 10–50			Broken brown siltstone. Drill vibrates when drilling, No water return		
6	4.6 / 6.1	1.4 / 93	15 / 50–150			Brown siltstone, Vibration stopped at 5.6m. Water returned at 5.8m.		
7	6.1 / 7.6	1.5 / 100	75 / 75–200			Continuous brown siltstone. (soft R2) Drilled easy.		
8	7.6 / 10.0	2.4 / 100	90 / 200+			Same as above. Hole terminated by engineer at 10 meter depth.		

Exhibit 6.3 Bore Log
(Page 2 of 2)

Bore Log Terminology

Description

(1) Soil Density, Consistency or Hardness*

(2) Color

(3) Major Grain Size* - Composes more than 50% of the sample

(4) Modifying Term -
'AND' - 40% to 50% of the minor grain size
'SOME' - 10% to 40% of the minor grain size
'TRACE' - Less than 10% of the minor grain size

(5) Minor Grain Size(s)

(6) Moisture Content - Dry (D), Moist (M), Wet (W)

(7) Laboratory Classification (AASHTO or Unified)

Soil Color

BR	-Brown	**GR RD**	-Grey-red
LT BR	-Light Brown	**BR RD**	-Brown-red
DK BR	-Dark Brown	**YELL**	-Yellow
GREY	-Grey	**PURP**	-Purple
LT GR	-Light grey	**GREEN**	-Green
DK GR	-Dark grey	**WHITE**	-White
RED	-Red	**GR GN**	-Grey-green
BLK	-Black	**MOTT**	-Mottled
BLUE	-Blue	**ORAN**	-Orange
GR BR	-Grey-brown		

Example

(1) **(2)** **(3)** **(4)** **(5)** **(4)** **(5)** **(6)** **(7)**
Medium dense, reddish brown SILT, some fine sand, trace of clay (moist), A-4
↑ ↑
(10% - 40%) (1% - 10%)

*See Exhibit 6.5 - Field Classification for Soil and Rock.

EXHIBIT 6.4 Bore Log Terminology

Particle Size Limits of Soil Constituents[1]		Cohesive Soils			Granular Soils		Rock Hardness[4]		Rock Quality[3]	
	Sieve Size	**Consistency**	**Field Identification**	**Resistance[3] By SPT**	**Relative Density**	**Resistance[3] By SPT**	**Hardness**	**Field Identification**	**Structural Quality**	**RQD[5]**
Boulder (BLDR)	305mm +	**Very Soft (SI)**	Easily penetrated 100 to 150 mm by fist	0-1	**Very Loose**	0-4	**Very Soft (R1)**	Crumbles under firm blows with point of geological pick. Can be peeled by a pocket knife.	**Very Poor**	0-25%
Cobble (COBB)	75-305mm	**Soft (S2)**	Easily penetrated 50 to 75 mm by thumb	2-4	**Loose**	5-10	**Soft (R2)**	Can be peeled by a pocket knife with difficulty, shallow indentations made by firm blow of geological pick.	**Poor**	25-50%
Gravel (GR)	2-75mm	**Firm (S3)**	Can be penetrated 50 to 75 mm by thumb with moderate effort	5-8	**Medium Dense**	11-24	**Medium Hard (R3)**	Cannot be scraped or peeled with a pocket knife, specimen can be fractured with single firm blow of hammer end of geological pick.	**Fair**	50-75%
Sand (SA)	0.075-2mm	**Stiff (S4)**	Readily indented by thumb but penetrated only with great effort	9-15	**Dense**	25-50	**Hard (R4)**	Specimen required more than one blow with hammer end of geological pick to fracture it.	**Good**	75-90%
Silt (SI)	Smaller than 0.075mm (nonplastic)	**Very Stiff (S5)**	Readily indented by thumbnail	16-30	**Very Dense**	50 +	**Very Hard (R5)**	Specimen required many blows of hammer end of geological pick to fracture it.	**Excellent**	90-100%
Clay (CL)	Smaller than 0.075mm (plastic)	**Hard (S6)**	Indented with difficulty by thumbnail	31 +			**Extremely Hard (R6)**	Specimen can only be chipped with geological pick		

Notes: **[1]ASTM D653**
[2]ASTM D2113
[3]Standard penetration test, AASHTO T-206 No. of blows 0.3m, N corrected for overburden pressure (N^1)
[4]Douglass Piteau, 1977
[5]Rock quality designation, percent of core run 100mm or greater in length

EXHIBIT 6.5 Field Classifications for Soil and Rock

Interpreted Design Soil Profile

Material Number	Description	Soil Parameters		
		C	ϕ	γ_T

EXHIBIT 6.6 Sample of Interpreted Design Soil Profile

SYMBOL	TYPE OF MATERIAL	δ	C	Φ
☐				
☐				
☐				
☐				
☐				
☐				
☐				

TEST BORING

BORING

M–BLOWS/0.3m
J–N JAR SAMPLE NO.
W–N WAX SAMPLE NO.

WATER LEVEL ▽

DEPTH MARK (METERS)

CR%	ROD
N	N
N	N

BHT or BHR

MISCELLANEOUS

1. SPT–STANDARD PENETRATION TEST–AASHTO T296
2. R–REFUSAL, SPT 100 BLOWS/0.3 METERS
3. CR%–PERCENT OF RECOVERY
4. GEOPHYSICAL TEST SITE: SEISMIC RESISTIVITY
5. SCALE 1:50 (0 – 5)
6. ROD–ROCK QUALITY DESIGNATION
7. BHT–BOTTOM OF HOLE TERMINATED BY ENGINEER
8. BHR–BOTTOM OF HOLE REFUSAL

NOTE: DETAILED BORING INFORMATION IS CONTAINED IN SOILS AND FOUNDATION REPORT NO._____

TYPE OF BORING

○ STATIC CONE PENETRATION TEST
● CONTINUOUS SAMPLING
□ ROTARY
◪ AUGER
⬡ WASH
◇ CORING

Project: _____

Location: _____

Prepared by: _____

Date: _____

Exhibit 6.7 Sample of Soils and Foundation Plan and Profile Sheet
(Page 1 of 2)

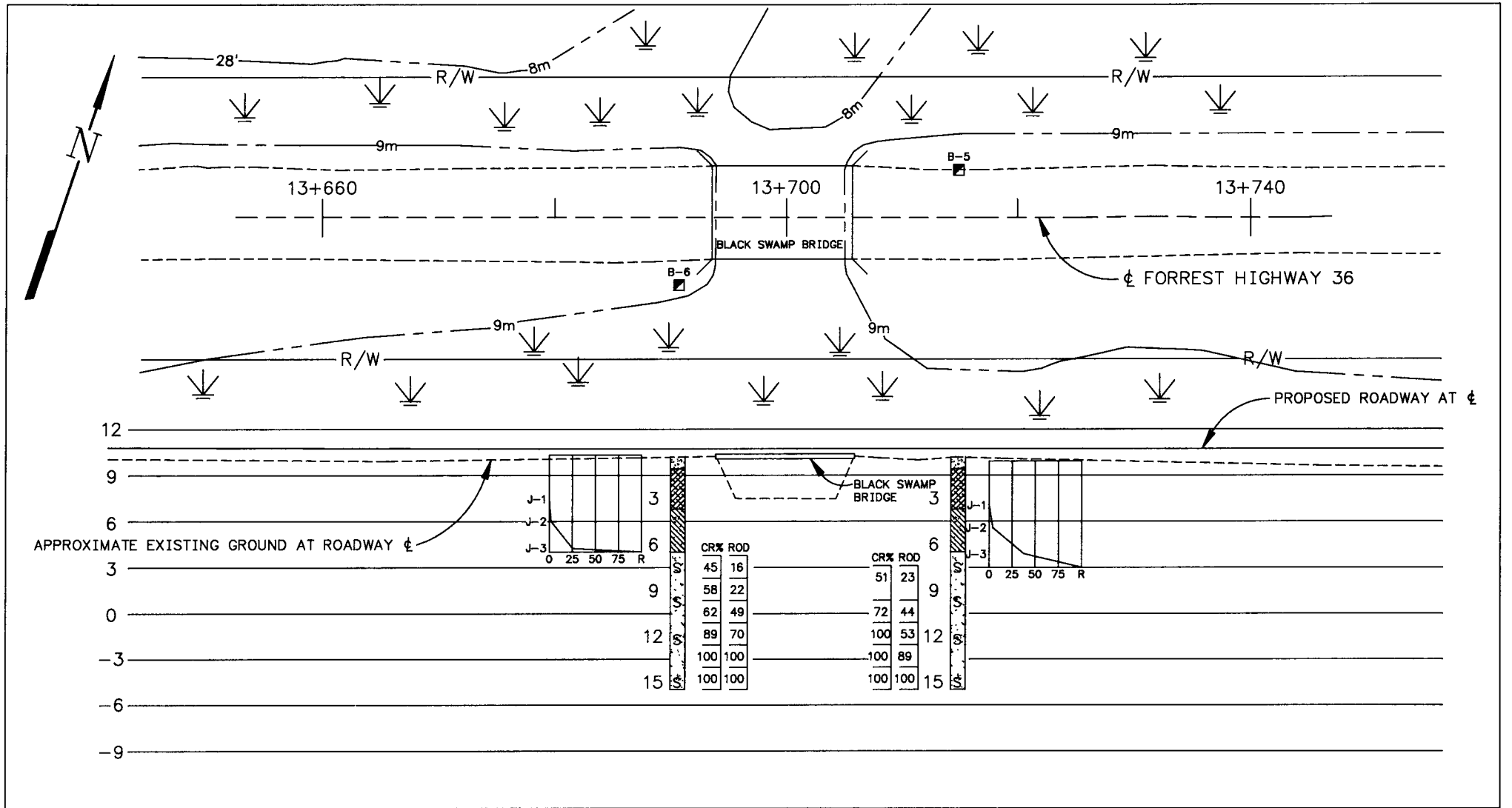

SYMBOL	TYPE OF MATERIAL	δ	C	Φ
	SAND (FILL)	110	0	32°
	CLAY, STONE SILT, TRACE ORGANICS	100	1000	5°
	LOOSE TO DENSE, MEDIUM GRAINED SAND	107	0	35°
	SAND, STONE CLAY	105	0	30°
S	SANDSTONE	130		

TEST BORING

BORING
M-BLOWS/0.3m
J-N JAR SAMPLE NO.
W-N WAX SAMPLE NO.
WATER LEVEL
DEPTH MARK (METERS)
CR% ROD
N N
N N
BHT or BHR

MISCELLANEOUS

1. SPT-STANDARD PENETRATION TEST-AASHTO T296
2. R-REFUSAL, SPT 100 BLOWS/0.3 METERS
3. CR%-PERCENT OF RECOVERY
4. GEOPHYSICAL TEST SITE: SEISMIC RESISTIVITY
5. SCALE 1:50 (0–5)
6. ROD-ROCK QUALITY DESIGNATION
7. BHT-BOTTOM OF HOLE TERMINATED BY ENGINEER
8. BHR-BOTTOM OF HOLE REFUSAL

NOTE: DETAILED BORING INFORMATION IS CONTAINED IN SOILS AND FOUNDATION REPORT NO._____

TYPE OF BORING

- ○ STATIC CONE PENETRATION TEST
- ● CONTINUOUS SAMPLING
- □ ROTARY
- ◪ AUGER
- ⬡ WASH
- ◇ CORING

Project: N.C. FII 36-1(I)

Location: Black Swamp CR. Bridge

Prepared by: G. Dolson

Date: April 1995

Exhibit 6.7 Sample of Soils and Foundation Plan and Profile Sheet
(Page 2 of 2)

Summary of Soil Survey

Project:_____ Date Performed: _____
Beginning Reference Location: _____ Performed by: _____

Station to Station	Description of Soil or Rock	Recommended Slope Ratios	Shrink/Swell Factor	Water Problem Area (Yes/No)	Remarks

EXHIBIT 6.8 Sample of Summary of Soil Survey

Summary of Water Problem Areas

Project: _____

Beginning Reference Location: _____

Performed By: _____ **Date Performed:** _____

From Station to Station	Description of Problem	Recommended Solution

EXHIBIT 6.9 Summary of Water Problem Areas

Field Mapping - Rock Structures*

1. Location, orientation, and number of planes are numeric. Data units are alphabetic and/or numeric. All other information is alphabetic.
2. Surface type, line type and rock type are three letter codes. Infilling water, form, roughness, and termination are one letter codes.
3. Record all codes and their full proper descriptions on a reference sheet.
4. Record position within the data unit or traverse under location. Each data unit should include data from within one sturctural unit only.
5. Thickness, spacing, and length are entered according to the size notation given below.

Traverse (Data Unit)

Data Unit	Northing	Easting	Elevation	Inclination

Infor-mation

Bearing	Length	No. Points	Structural Unit	Formation	Declination	Observer

Remarks _____

Size Notations (A through I mm, J through S m)

A	<0.26	E	12.5–25	J	0.3–0.6	O	9.0–18.0
B	0.25	F	25–50	K	0.6–1.2	P	18.0–30.0
C	0.25–6.5	G	50–100	L	1.2–2.4	Q	30.0–60.0
D	6.5–12.5	H	100–200	M	2.4–4.5	R	60.0–120.0
		I	200–300	N	4.5–9.0	S	>120.0

Surface type
- C – Contact
- F – Fault
- S – Shear
- J – Joint
- B – Bedding
- L – Schistosity or Folitation
- V – Vein

Infilling
- A – Clay
- F – Iron metals
- W – Calcite
- K – Chlorite
- Q – Quartz
- P – Pyrite

Water
- W – Wet
- D – Dry
- M – Moist

Form
- P – Planar
- C – Curved
- U – Undulating
- S – Stepped
- I – Irregular

Roughness
- V – Very rough(JRC=25)
- R – Rough(JRC=15)
- S – Smooth(JRC=5)
- P – Polished(JRC=0)

Term
- 0 – neither end visible
- 1 – one end visible
- 2 – both ends visible

Data Unit	Location	Surface Type	Orientation Dip	Orientation Direction	Infillings 1	Infillings 2	Infillings 3	Thick	Water	Form	Rough	Spec	No. of Planes	Length	Term	Job number	Line Type	Orientation Dip	Orientation Direction	Rock Type

*Detailed instruction available in Rock Slopes Design, Excavation, Stabilization by Golder Associates.

Exhibit 6.10
Field Mapping - Rock Structures*
(Page 1 of 2)

Field Mapping - Rock Structures* (continued)

Project _____

Location _____

Plotted by: _____ Date: _____

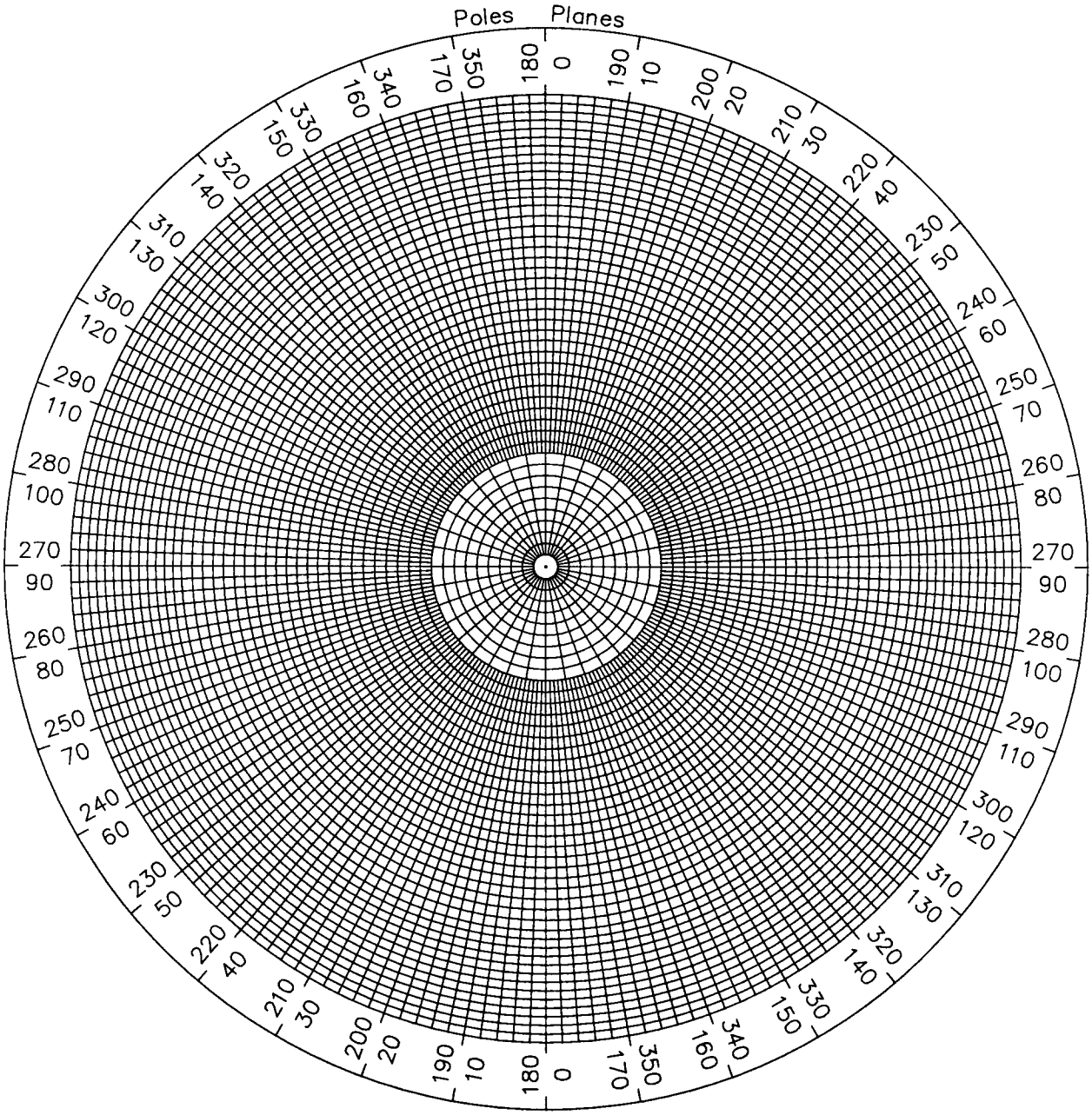

Note: plot for data collected from field mapping of the rock structure.

Exhibit 6.10
Field Mapping - Rock Structures*
(Page 2 fo 2)

EXHIBIT 6.11 (Reserved)

Seismograph Data Sheet

Project Name	Operator	Date
Location Description		
Field Notes		

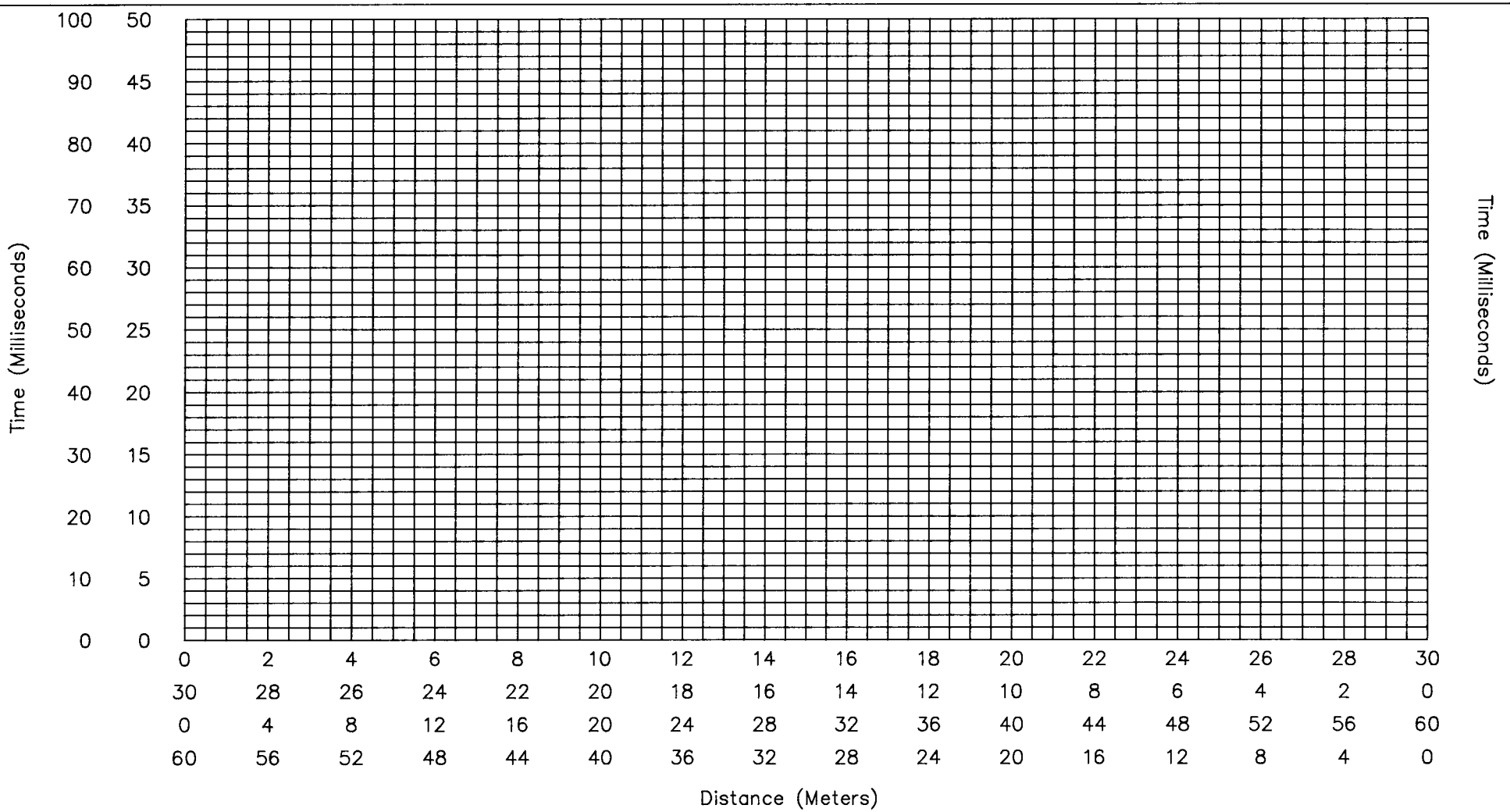

Exhibit 6.12 Seismograph Data Sheet

Resistivity Data Sheet

Project Name: _____ **Date:** _____

Location Description: _____ **Operator:** _____

Notes: _____

_____

_____

Apparent Resistivity = (Electrode Spacing) (Dial Reading) (Scale Factor)

No.	Electrode Spacing (Meters)	Dial Reading	Scale Factor	Apparent Resistivity (Ω · m)	Cumulative Resistivity (Ω · m)

EXHIBIT 6.13 Resistivity Data Sheet
(Page 1 of 2)

Resistivity Data Sheet (continued)

Project Name: _____ Test No.: _____

Test Location: _____ Test Date: _____

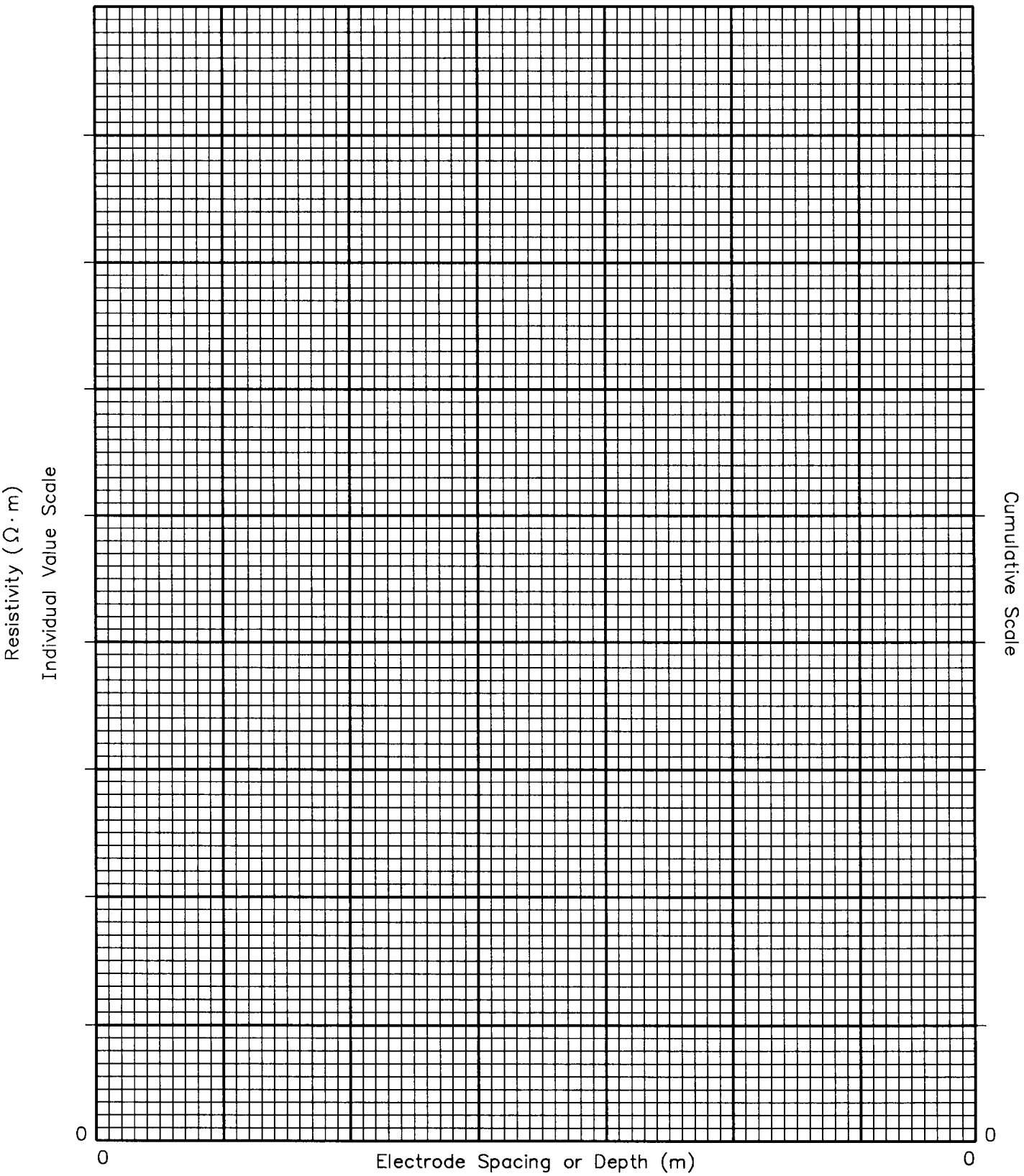

Exhibit 6.13
(page 2 of 2)

Bore Hole Shear Test

Project: _____ Boring No.: _____ Test No.: _____

Location: _____ Date: _____

Depth: _____ Tested By: _____

Description: _____

Point No.	Normal stress		Shear stress		Time*	Remarks
	Gage	σ_n	Gage	τ max		

*Consolidation time

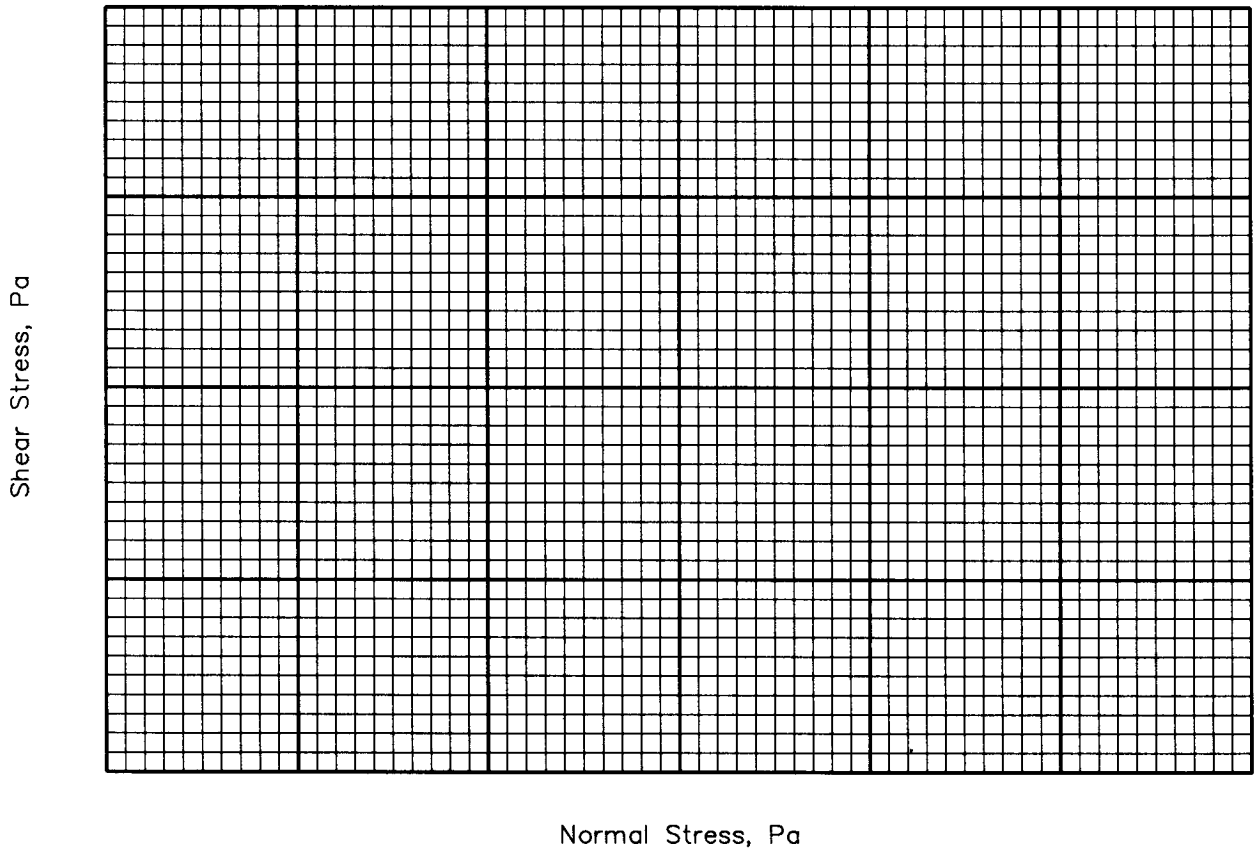

Exhibit 6.14 Bore Hole Shear Test

Inclinometer Data

Well No. _____

Reading No. _____

Project _____

Location _____

Date: _____ Readings taken by: _____

Depth	Az=A #1	Az=A #2		Az=B #1	Az=B #2	
1 4	8 13	17 22		26 31	35 40	
0						
0						
0				

Pavement Bore Log

Project:	Boring No.:	Date:	Sheet of
Boring Location:	Type of Boring:		
	Inspector:		

Type of Pavement:

Depth	Description	Comments

Exhibit 6.16 Pavement Bore Log

Asphaltic Concrete Pavement Condition Survey*

Project: _____

Beginning Reference Location: _____

Direction: _____ Logged By: _____ Date: _____

Station	Left Lane	Right Lane	Station	Left Lane	Right Lane

Portland Cement Concrete Pavement Condition Survey*

Project Name: _____

Beginning Reference Location: _____

Direction: _____ Logged by: _____ Date: _____

	1	2	3	4	5	6	7	8	9	10
Station/Location _____										
Faulting										
Remarks										

	1	2	3	4	5	6	7	8	9	10
Station/Location _____										
Faulting										
Remarks										

	1	2	3	4	5	6	7	8	9	10
Station/Location _____										
Faulting										
Remarks										

*See Highway Pavement Distress Identification Manual

Exhibit 6.18 Portland Cement Concrete Pavement Condition Survey*

(Page 1 of 2)

Portland Cement Concrete Pavement Condition Survey (cont)
Instructions

Distress Information

a. Amount of faulting - greater than or equal to 3mm, 1 meter from curb joint.

b. Location and severity of all cracks located from joint -
   L = hairline (less than 2 meters long - do not survey)
   M = working crack - less 13mm fault
   H = greater than 25mm and/or greater than 13 mm

Maintenance and Repair

a. Edge drain installations - location of cut areas
   |CUT→ ←CUT|

b. Joint repair due to spalls
   L = less than 75mm from joint
   M = 75mm to 150mm from joint
   H = greater than 150mm from joint

c. Asphalt patch area and location

d. Mudjacking hole locations

General Information

a. Station number locations

b. Marking beginning and ending locations of entrance and exit ramps

c. Location of mainline and overhead bridges, culverts, and inlets

d. Location of expansion joints - traverse (slab length)

e. Joint spacing - longitudinal (slab width)

f. Record road grade as uphill (+) or downhill (-)

g. Joint width (nearest 3mm) - put in remarks section of survey form

h. Slab dip (|→ down from profile)

i. Faulting measurement for each joint is to be recorded in the space provided under each joint

j. Notations such as grade, super elevation, grinding and such other information which remain constant for considerable distances need only be noted on the first and last slab on each survey sheet and at its beginning and ending occurrence. The arrow must be included to indicate that the condition is occurring on all slabs and not in the individual slab marked.

EXHIBIT 6.18 Portland Cement Concrete Pavement Condition*
(Page 2 of 2)

Rock Slope: Near Vertical		
H	W	D
4.5–9.0	2.4	0.9
9.0–18.0	3.6	1.2
Over 18	5.5	1.2
Rock Slope: 4:1 & 3:1		
H	W	D
4.5–9.0	2.4	0.9
9.0–18.0	3.6	1.2
18.0–30.0	5.5	1.8
Over 30	7.6	1.8
Rock Slope: 2:1		
H	W	D
4.5–9.0	2.4	1.2
9.0–18.0	3.6	1.8
18.0–30.0	5.5	1.8
Over 30	7.6	2.4
Rock Slope: 1.3:1		
H	W	D
0–9.0	2.4	0.9
9.0–18.0	3.6	1.2
Over 18	3.6	1.8
Rock Slope: 1:1		
H	W	D
0.9–9.0	2.4	0.9
9.0–18.0	3.0	1.5
Over 18	3.6	1.8
Rock Slope: 1:1.25		
Use rock fence on shoulder.		

Note: All dimensions in meters.

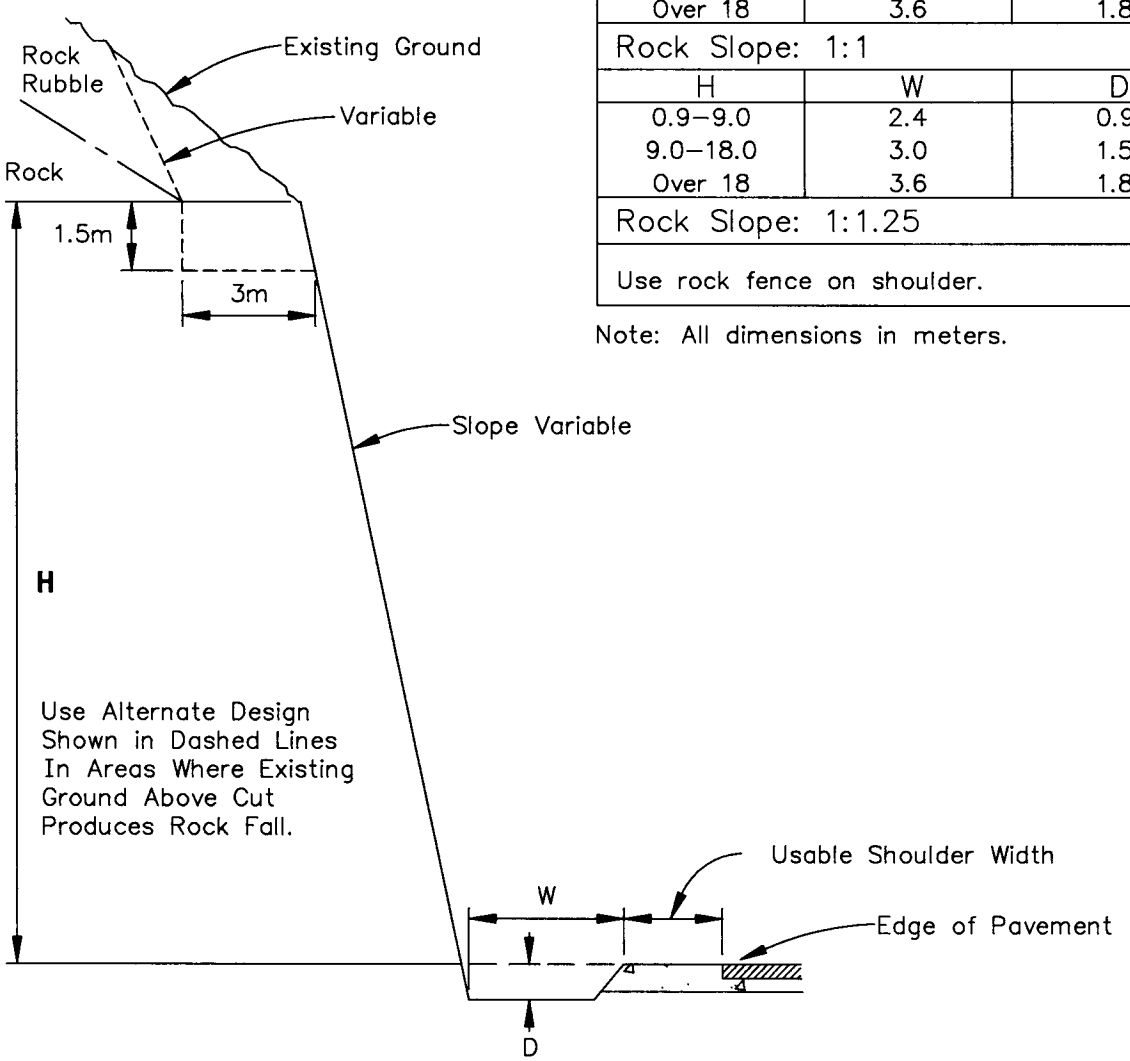

Exhibit 6.19 Rock Slope Design Criteria*

**Ritchie 1963.*

Estimating Rippability of Materials from Seismic Wave Velocities*

*Caterpillar Performance Handbook, 24th Edition.

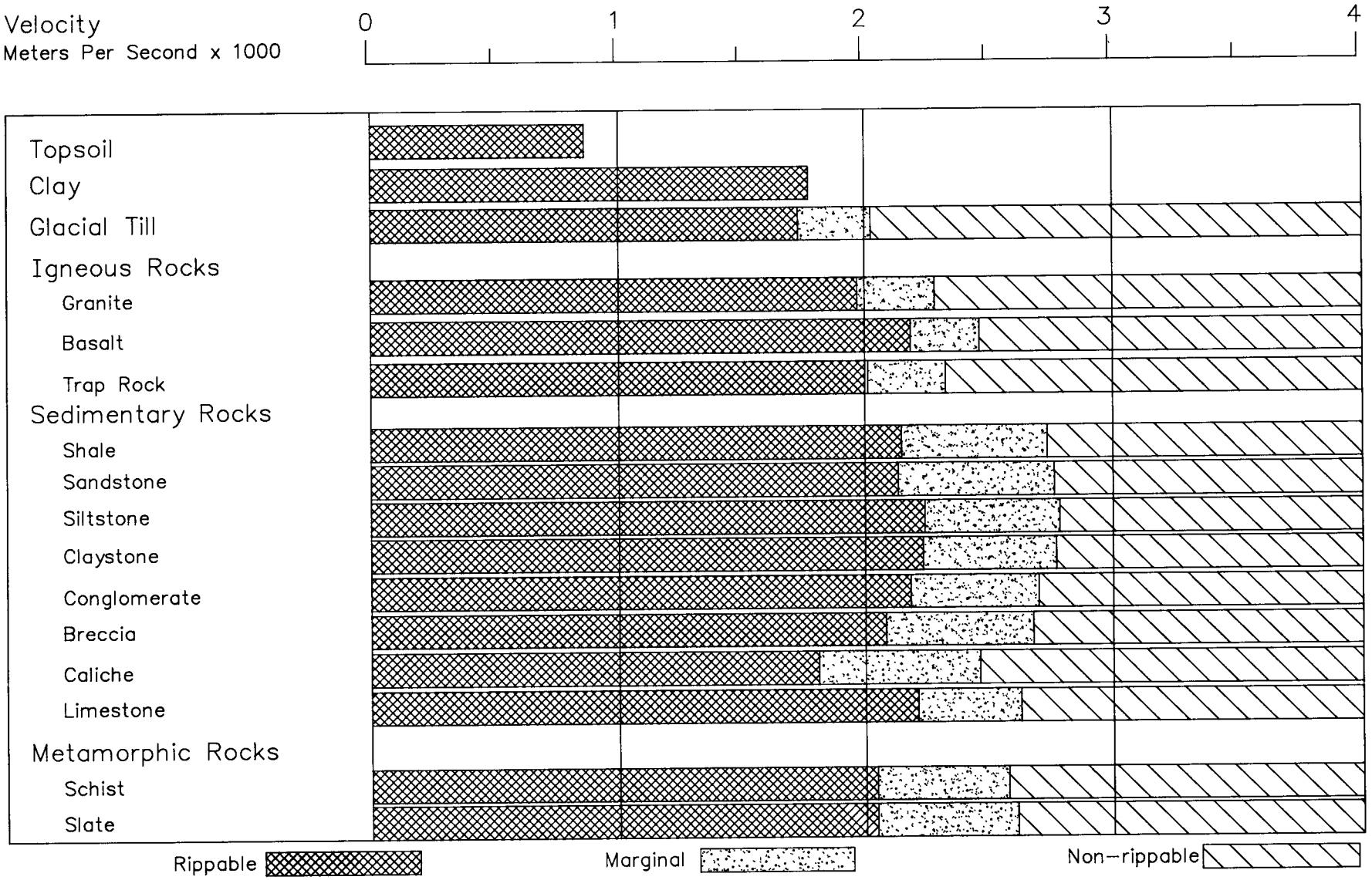

NOTE: Chart applicable for a caterpiller D9N or equivalent ripper in good condition. In addition, consideration should be given to individual site conditions and the high variability of in situ materials.

Exhibit 6.20 Estimating Rippability of Materials from Seismic Wave Velocities*

Allowable Bearing Pressure for Spread Footings

Project: _____

Footing Location: _____

Designer: _____ Date: _____

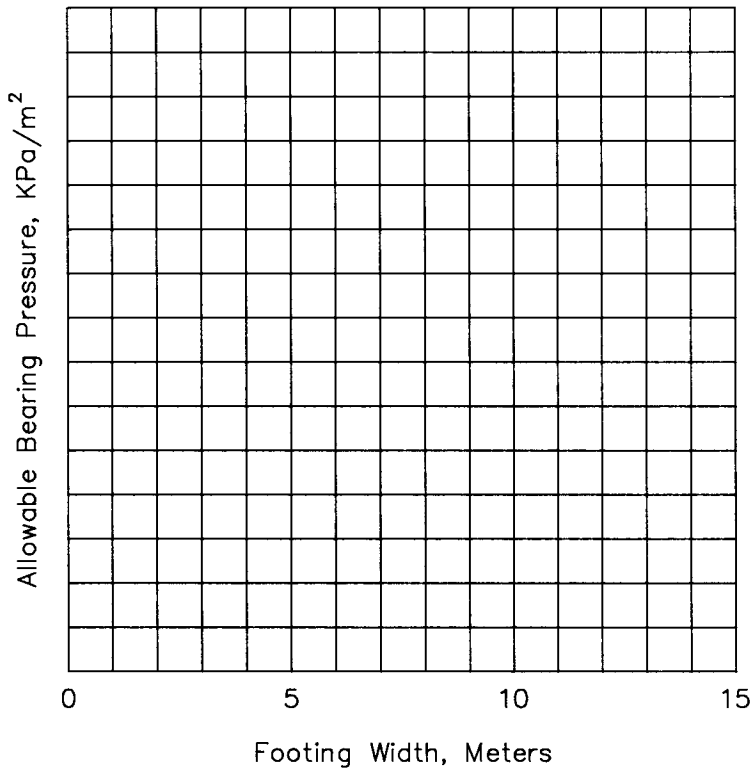

Design Criteria:

1. Soil Type: _____
2. Factor of Safety: _____
3. Minimum Soil Above Footing Elevation: _____
4. Minimum Depth to Water Table: _____
5. Settlement at Bearing Pressure: _____
6. Maximum Total Settlement: _____

Exhibit 6.21 Allowable Bearing Pressure for Spread Footings

Allowable Pile Capacity, kN

Depth of Penetration, Meters

Pile Tip Elevation, Meters

Project: _____

Location: _____

Substructure Unit: _____ Factor of Safety: _____

Exhibit 6.22 Allowable Pile Capacity Curve

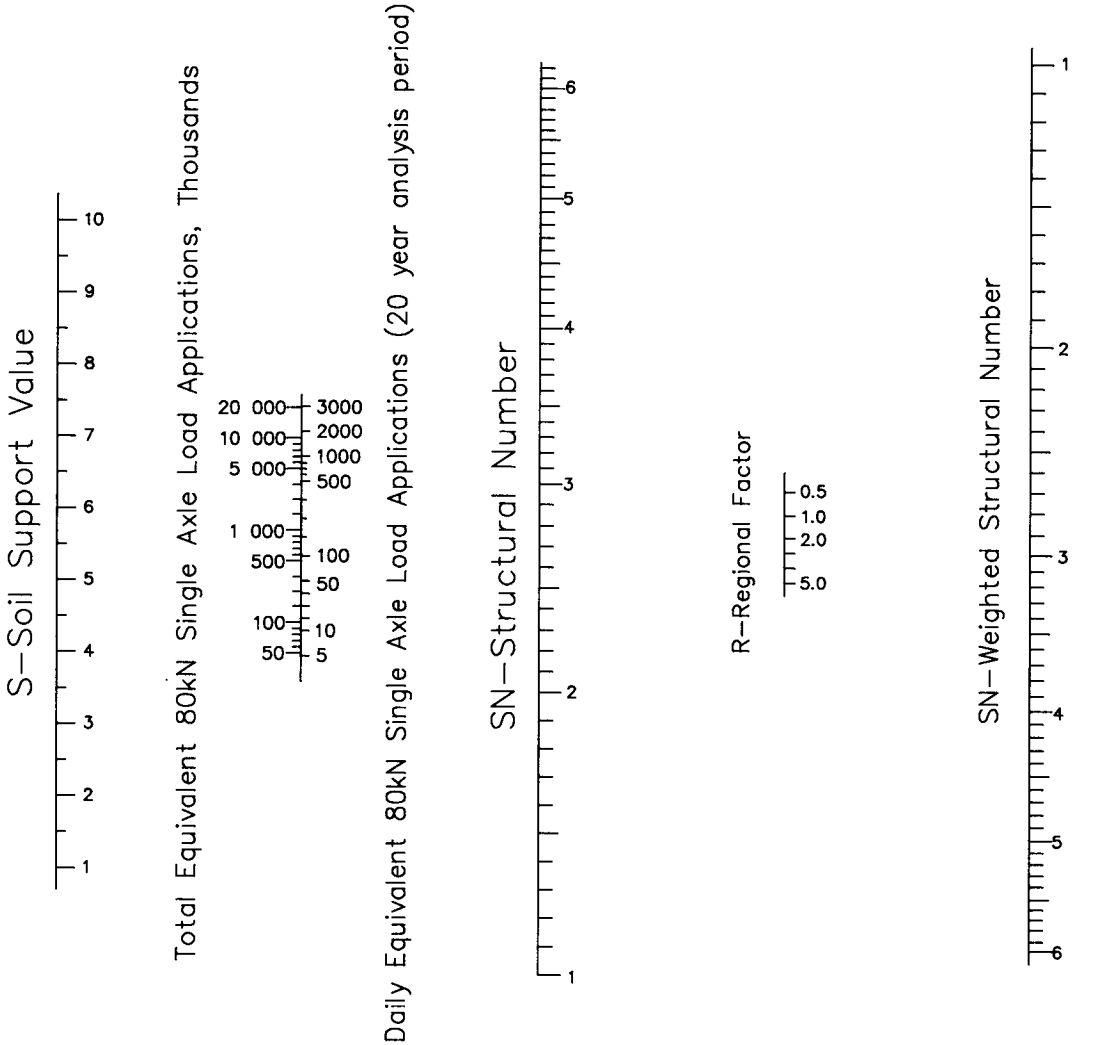

The chart requires two applications of a straightedge for each solution. First, the soil support value of the roadbed soil (on the left scale) and the total or daily equivalent 80kN/single-axle loads for the traffic analysis period (left side of second scale) are used to solve for the unweighted structural number (center scale). This unweighted structural number is used with the selected regional factor (4th scale) to solve for the design SN (right scale) applicable to the total pavement structure. Suitable designs are those whose combinations of materials types and thicknesses satisfy the general equation:

$$SN = a_1D_1 + a_2D_2 + a_3D_3$$

Exhibit 6.23 Design Chart for Flexible Pavements - P_t = 2.0

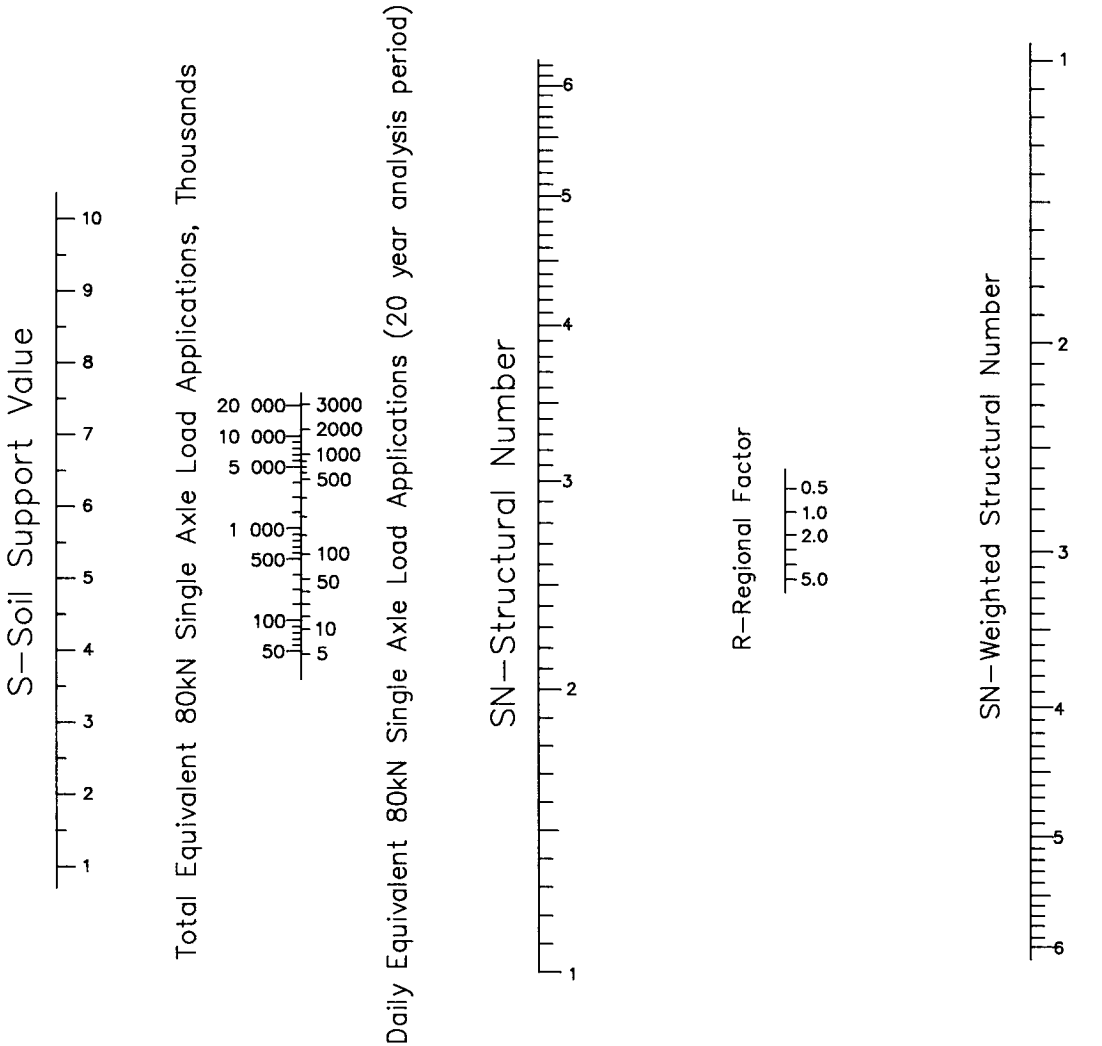

The chart requires two applications of a straightedge for each solution. First, the soil support value of the roadbed soil (on the left scale) and the total or daily equivalent 80kN/single-axle loads for the traffic analysis period (left side of second scale) are used to solve for the unweighted structural number (center scale). This unweighted structural number is used with the selected regional factor (4th scale) to solve for the design SN (right scale) applicable to the total pavement structure. Suitable designs are those whose combinations of materials types and thicknesses satisfy the general equation:

$$SN = a_1 D_1 + A_2 D_2 + A_3 D_3$$

Exhibit 6.24 Design Chart for Flexible Pavements - P_t = 2.5

Pavement Structure Layer Thickness Worksheet

Project _____ Prepared By: _____

Section _____ From: _____ To: _____ Date: _____

Traffic Analysis

AADT X DY X 365X DDF X LDF X LF = Total 80kN ESAL Design

_____ X _____ X 365X _____ X _____ X _____ = _____ Use [ ]

AADT = (Present ADT + Future ADT)/2
DY = Number of Design Years (Typ. 20)
DDF = Directional Factor (Typ. .5)
LDF = Lane Distribution Factor (Typ. 1.0)

Load Factor (LF) = 80kN Equivalent Load Factor Per Vehicle

Regional Factor (RF)

Percipitation (mm/yr) _____ P_f _____
Average Elev. (m) _____ E_f _____
Drainage _____ D_f _____
Total RF [ ]

Existing Pavement Structure

	Material Type	Thickness Range	Strength Range
Surface			
Base			
Subbase			

Soil Support Value

Description: _____ Classification: _____

No. Samples Taken: _____ Range of Test Values: _____

Type of Tests: _____ No. of Tests: _____ Design Test Value: _____

Design Soil Support Value [ ]

Design Terminal Serviceability (P_f) = [ ]

Required Structural Number (SN) = [ ]

Pavement Structure Alternatives

Pavement Component	Typical Range of Structural Coefficient (SC)	Alternative #1 Design			Alternative #2 Design			Alternative #3 Design		
		SC	Thick.	SN	SC	Thick.	SN	SC	Thick.	SN
	x 10^{-3}									
Seal Coat	0 – 1.97									
Plant Mix Seal	9.84 – 19.68									
Plant Mix Surfacing	13.78 – 17.72									
Road Mix Surfacing	7.87 – 9.84									
Stab. Base Plant Mix	9.84 – 11.81									
Stab. Base Road Mix	5.91 – 7.87									
Stab. Base Emulsion	4.72 – 11.02									
Stab. Base Cement	4.72 – 9.45									
Stab. Base Lime	4.72 – 9.45									
Crushed Agg. Base	3.94 – 5.91									
Gravel Base	2.75 – 5.51									
Select Borrow	1.97 – 3.94									
Exist. Roadway										
Totals										

Exhibit 6.25 Pavement Structure Layer Thickness Worksheet
(Page 1 of 2)

Pavement Structure Layer Thickness Worksheet

Project: OR FN 141 Prepared By: M. Symons
Section: 1 From: MP 125 To: MP 130 Date: 1-27-95

Traffic Analysis

AADT X DY X 365X DDF X LDF X LF = Total 80kN ESAL Design

200 X 20 X 365X .5 X 1 X .8 = 584,000 Use 600,000

AADT = (Present ADT + Future ADT)/2
DY = Number of Design Years (Typ. 20)
DDF = Directional Factor (Typ. .5)
LDF = Lane Distribution Factor (Typ. 1.0)

Load Factor (LF) = 80kN Equivalent Load Factor Per Vehicle

Regional Factor (RF)

Percipitation (mm/yr)	500	P_f	1.0
Average Elev. (m)	2400	E_f	0.5
Drainage	Poor	D_f	1.0
		Total RF	2.5

Existing Pavement Structure

	Material Type	Thickness Range	Strength Range
Surface	BST	25–50mm	None
Base	Gravel	100–200mm	None
Subbase	None	—	

Soil Support Value

Description: Clay Gravel Classification: A-2-4
No. Samples Taken: 8 Range of Test Values: 30–50
Type of Tests: R-value No. of Tests: 6 Design Test Value: 35

Design Soil Support Value 6.2

Design Terminal Serviceability (P_f) = 2.5

Required Structural Number (SN) = 2.80

Pavement Structure Alternatives

Pavement Component	Typical Range of Structural Coefficient (SC)	Alternative #1 Design			Alternative #2 Design			Alternative #3 Design		
		SC	Thick.	SN	SC	Thick.	SN	SC	Thick.	SN
	x 10^{-3}	x 10^{-3}			x 10^{-3}			x 10^{-3}		
Seal Coat	0 – 1.97									
Plant Mix Seal	9.84 – 19.68									
Plant Mix Surfacing	13.78 – 17.72	13.78	80	1.10	13.78	100	1.38	13.78	120	1.65
Road Mix Surfacing	7.87 – 9.84									
Stab. Base Plant Mix	9.84 – 11.81									
Stab. Base Road Mix	5.91 – 7.87							7.87	150	1.18
Stab. Base Emulsion	4.72 – 11.02									
Stab. Base Cement	4.72 – 9.45									
Stab. Base Lime	4.72 – 9.45									
Crushed Agg. Base	3.94 – 5.91	5.51	250	1.38	5.51	275	1.51			
Gravel Base	2.75 – 5.51									
Select Borrow	1.97 – 3.94									
Exist. Roadway		3.00	100	0.30	0	0	0	0	0	0
Totals			330 (New)	2.78		375	2.89		270	2.84

Exhibit 6.25
(Page 2 of 2)

General Report Checklist

Project: _____

Location: _____

Prepared by: _____ **Date:** _____

Components	Check Appropriate Box		
	Yes	No	Not Applicable
1. Is a title page included?			
2. Is a vicinity map included?			
3. Is a standard report format followed? (i.e., introduction, results, discussion, recommendation, details, and appendices)			
4. Is the scope and purpose of report and authority for investigation summarized in the introduction?			
5. Is the summary of field explorations and lab testing given in the results?			
6. Is the description of general subsurface soil, rock, and groundwater conditions given in the results?			
7. Are concise descriptions given for geologic features and topography of the area in the discussion?			
8. Are recommendations concise and in sufficient detail to design the project or serve the intended purpose?			
9. Is the following information included with the geotechnical report? (typically included in report appendices): •Test hole logs? •Laboratory test data? •Field test data? •Photographs?			

Comments _____

_____

EXHIBIT 6.26 Sample of General Report Checklist

Site Investigation Checklist

Project: _____

Location: _____

Prepared by: _____ **Date:** _____

Components	Check Appropriate Box		
	Yes	No	Not Applicable
1. Is a plan profile (subsurface cross section) of the investigation site provided and clearly identified?			
2. Are the locations of all samples, boring, test pits, probes, geophysical, and field testing shown on a plan view?			
3. Are the locations of the proposed geotechnical features, existing structures, utilities, and other physical site features shown on a plan view?			
4. Are test hole numbers and dates included for each boring or exploration.			
5. Do the profile boring logs contain a word description and/or graphic depiction of soil and rock types?			
6. Is sample type and depth at which each sample was taken noted on the boring logs?			
7. Are SPT blow counts provided on the boring logs?			
8. Are groundwater levels and date measured shown on the boring logs?			
9. Are percent rock core recovery and RQD values shown on the boring logs?			
10. If cone penetrometer probes are made, are logs of cone probes shown, including plots of cone resistance and friction ration with depth?			
11. Is location of other field tests performed at the boring site (such as vane shear, pressure-meter, drive casing, etc.) shown on the boring logs?			
12. Are soil classification tests determined on selected representative samples to verify field visual soil identifications?			
13. Are laboratory test results (natural moisture content, gradation, Atterberg limits, shear strength, consolidation, etc.) included and summarized?			

EXHIBIT 6.27 Sample of Site Investigation Checklist

Spread Footings Checklist

Project: _____

Location: _____

Prepared by: _____ **Date:** _____

Components	Check Appropriate Box		
	Yes	No	Not Applicable
1. Are spread footings recommended for foundation support or provided as an alternative to deep foundations?			
2. Are recommended bottom of footing elevations and reasons for recommendations (e.g., based on frost depth, estimated scour depth, or depth to competent bearing material) given?			
3. Are the recommended allowable soil or rock bearing pressures given?			
4. Are estimated footing settlements given?			
5. Where spread footings are recommended to support abutments placed in the bridge end fills, are gradation and compaction requirements provided for select end fill and backwall drainage material?			
6. Construction considerations—have the following important construction considerations been adequately addressed?			
a. Materials on which the footing is to be placed — method by which project inspector can verify that material is as expected?			
b. Excavation requirements — safe slopes for open excavations, need for sheeting or shoring?			
c. Fluctuation of groundwater table?			
7. Are necessary contract special provisions provided?			

Comments _____

EXHIBIT 6.28 Sample of Spread Footing Checklist

Piles Checklist

Project: _____

Location: _____

Prepared by: _____ **Date:** _____

Components	Check Appropriate Box		
	Yes	No	Not Applicable
1. Are most suitable pile types (displacement, nondisplacement, pipe pile, concrete pile, H-pile, etc.) analyzed?			
2. Are reasons given for choice and/or exclusion of certain pile types?			
3. Are estimated pile lengths and estimated tip elevations given?			
4. Are recommended allowable pile design loads given?			
5. Has pile group settlement been estimated? (only of practical significance for friction pile groups in cohesive soils or large heavy structures on friction pile groups in sand)			
6. If a specified or minimum pile tip elevation is recommended, is the reason given for the required tip elevation? (such as underlying soft layers, scour, downdrag, piles uneconomically long, etc.)			
7. Has design analysis verified that the recommend pile type can be driven tot he estimated or specified tip elevation without damage? (especially applicable where dense gravel-cobble-boulder layers or other obstructions have to be penetrated)			
8. Where the bridge abutment is to be supported on end-bearing piles and significant long-term settlement of the subsoil will occur (such as for embankments built over clays or soils with high organic content):			
a. Has abutment downdrag load been estimated and considered in design?			
b. Has bridge approach slab been considered to moderate differential settlement between bridge ends and fill?			
9. If the majority of subsoil settlement will not be removed prior to abutment construction, has estimate been made of the amount of abutment rotation that can occur due to lateral squeeze of soft subsoil?			

EXHIBIT 6.29 Sample of Piles Checklist
(page 1 of 2)

Piles Checklist

Project: _____

Location: _____

Prepared by: _____ **Date:** _____

Components (continued)	Check Appropriate Box		
	Yes	No	Not Applicable
10. Has horizontal abutment movement been considered?			
11. Has pile load test program or dynamic testing been considered?			
12. For a structure in high seismic risk area, has assessment been made of liquefaction potential of foundation soil during design earthquake? (Note only loose saturated sands and silts are "susceptible" to liquefaction)			
13. Construction considerations - have the following important construction considerations been adequately addressed?			
a. Pile driving details and what may be encountered during driving such as boulders or other obstructions (any need for pre-augering, jetting, spudding, pile tip reinforcement, driving shoes, etc.?)			
b. Excavation and the need for sheeting or shoring? (Safe slopes for open excavating)			
c. Fluctuations in groundwater table?			
d. Have effects of pile driving operation on adjacent structures been evaluated? (such as protection against damage caused by footing excavations or pile driving vibrations)			
e. Should preconstruction condition survey be made on adjacent structures? (to document for possible construction damage claims)			
Comments			

_____

_____

_____

_____

_____

EXHIBIT 6.29
(page 2 of 2)

Drilled Shaft Checklist

Project: _____

Location: _____

Prepared by: _____ **Date:** _____

Components	Check Appropriate Box		
	Yes	No	Not Applicable
1. Recommended shaft diameter(s) and length?			
2. Allowable design load given for various diameter shafts recommended?			
3. Allowable end bearing value given?			
4. Allowable side friction value given?			
5. Settlement estimated for recommended design load?			
6. Where lateral load capacity of shaft is an important design consideration, are P-Y (load versus deflection) curves or soils data provided in geotechnical report which will allow structural engineer to evaluate lateral load capacity of shaft?			
7. Is static load test (to plunging failure) recommended?			
8. Construction considerations?			
a. Have construction methods been evaluated? (i.e., can dry method or slurry method be used or will casing be required)			
b. If casing will be required, can casing be pulled as shaft is concreted? (this can result in significant cost savings on very large diameter shafts)			
c. If artesian water may be encountered in the shaft excavation, have provisions been included? (such as by requiring casing and tremie seal)			
9. Are boulders likely to be encountered? (Note - if boulders are likely to be encountered, then the use of shafts should be questioned due to serious construction installation difficulties and possible higher costs.)			
10. Are recommended contract special provisions provided?			

EXHIBIT 6.30 Sample of Drilled Shaft Checklist

Retaining Wall Checklist

Project: _____

Location: _____

Prepared by: _____ **Date:** _____

Components	Check Appropriate Box		
	Yes	No	Not Applicable
1. Does the geotechnical report include recommended soil strength parameters and groundwater elevation for us in computing wall design lateral earth pressures and factor of safety for overturning, sliding, and external slope stability?			
2. Does the design lateral earth pressure include the effects of soil backfill strength, slope geometry, and surcharge loads?			
3. Has the most suitable and cost-effective wall type(s) been selected for the specific site conditions?			
4. Are reasons given for the choice and/or exclusion of certain wall types (gravity, reinforced soil, tieback, cantilever, bin, gabion, etc.)?			
5. Does wall design provide for and identify minimum acceptable factors of safety against overturning, sliding, and external slope stability?			
6. If wall will be placed on compressible foundation soils, is estimated total settlement, differential settlement, and time rate of settlement given?			
7. Can selected wall system(s) tolerate the estimated differential settlement?			
8. If special drainage details are needed behind and/or beneath the wall, are recommended details provided in the geotechnical report?			
9. Is proposed to bid alternative wall designs?			
10. Construction considerations:			
a. Are excavating requirements covered (safe slopes for open excavations, need for sheeting or shoring, etc.)?			
b. Fluctuation of groundwater table?			
11. Are recommended contract special provisions provided?			

EXHIBIT 6.31 Sample of Retaining Wall Checklist

Roadway Cut and Embankment Checklist

Project: _____

Location: _____

Prepared by: _____ **Date:** _____

Components	Check Appropriate Box		
	Yes	No	Not Applicable
1. Are station to station descriptions included for:			
a. Existing surface and subsurface drainage?			
b. Evidence of springs and excessively wet areas?			
c. Slides or slumps noted along the alignment?			
2. Are station to station recommendations included for:			
a. Cut slope design?			
b. Are clay slopes designed for minimum FS = 1.50?			
c. Fill slope design?			
d. Will slope design provide minimum FS = 1.25?			
e. Usage of excavated soils?			
f. Estimated shrink-swell factors for excavated materials?			
g. Specific surface/subsurface drainage considerations?			
h. Identifying subexcavation limits of unsuitable soils?			
i. Erosion protection measures for backslopes, sideslopes, and ditches, including riprap or special slope treatments?			
j. Are special blasting specifications needed to insure stable rock slopes and minimize future rockfall?			
k. Need for special rock slope stabilization measures (e.g., rockfall catch ditch, wire mesh slope protection, shotcrete, rock bolts, etc.) identified?			
3. Are recommended contract specifications provided?			
Note: Factor of Safety (FS)			

EXHIBIT 6.32 Sample of Roadway Cut and Embankment Checklist

Pavement Design Checklist

Project: _____

Location: _____

Prepared by: _____ **Date:** _____

Components	Check Appropriate Box		
	Yes	No	Not Applicable
1. Has a visual distress assessment of the existing pavement been made and is summary of results provided?			
2. Has the roughness of the existing pavement surface been measured and are results summarized?			
3. Have deflection tests been made on the existing pavement and the results summarized?			
4. Has a subsection breakdown been provided to group similar existing conditions, pavement structure, and expected traffic loads within the project?			
5. Are traffic estimates provided that include total ADT, trucks, and accumulative equivalent 80KN?			
6. Are strength properties and thickness of each of the pavement layers and subsections included?			
7. Is the design method used to develop the pavement alternatives identified and are all inputs used for design clearly summarized?			
8. Are advantages and disadvantages of each alternative provided for the acceptable pavement structures?			
9. Are reasons for recommended pavement structure alternatives clearly stated?			
10. Are construction problems, weather restrictions, water and/or material problems considered?			
11. Are recommended contract specifications provided?			
12. Has a life cycle cost analysis been performed?			

EXHIBIT 6.33 Sample of Pavement Design Checklist

Material Investigation Checklist

Project: _____

Location: _____

Prepared by: _____ **Date:** _____

Components	Check Appropriate Box		
	Yes	No	Not Applicable
1. Is material site location (include description of existing or proposed access routes, bridge load limits, etc.) identified?			
2. Have representative samples of materials encountered during the investigation been tested?			
3. Are laboratory quality rest results included in the report?			
4. Aggregate sources.			
a. Do the laboratory quality test results (such as LA abrasion, sodium sulfate, degradation, absorption, reactive aggregate, etc.) indicate acceptable materials can be obtained from the deposit using normal processing methods?			
b. If acceptable material cannot be obtained from the source using normal processing methods, have special requirements been provided for processing or controlling production?			
5. Borrow sources, have possible difficulties (such as above optimum moisture content clay-silt soils, waste due to high PI, boulders, etc.) been noted?			
6. Where high moisture content clay-silt soils must be used, are recommendations provided on the need for aeration to allow the materials to dry out sufficiently to meet compaction requirements?			
7. Has previous use of proposed source been discussed?			
8. Does estimated quantity of proven material satisfy the estimated project needs?			
9. Where materials will be excavated from below the water table, has seasonal fluctuation of the water table been determined?			
10. Are special permit requirements covered?			
11. Are pit reclamation requirements covered adequately?			

EXHIBIT 6.34 Sample of Material Source Investigation Checklist (Page 1 of 2)

Materials Investigations Checklist (continued)

	Check Appropriate Box		
	Yes	**No**	**Not Applicable**
12. Has a material site sketch (plan and profile) been provided for inclusion in the plans, which contains:			
• Material site number or identification?			
• Owner identified?			
• North arrow and legal subdivision?			
• Test hole or test pit logs, location, number, and date?			
• Water table elevation and date?			
• Depths of unsuitable layers including overburden which are not acceptable.			
• Potential disposal areas?			
• Potential mining area and previously mined areas?			
• Existing stockpile locations?			
• Existing or potential access roads?			
• Bridge load limits?			
• Reclamation details?			
13. Are recommended contract provisions provided?			

Comments _____

_____

_____

_____

_____

EXHIBIT 6.34 Sample of Material Source Investigation Checklist (Page 2 of 2)

Landslide Correction Checklist

Project: _____

Location: _____

Prepared by: _____ **Date:** _____

Components	Check Appropriate Box		
	Yes	No	Not Applicable
1. Does the report include a site plan and typical cross section showing ground surface conditions both prior to and after failure?			
2. Has a site reconnaissance been conducted to define the limits of the slide improvement?			
3. Are slide limits (including location of ground surface cracks, head scarp, and toe bulge) shown on the site plan?			
4. Is past history (movement history, maintenance work and costs, and corrective measures taken) of slide are summarized?			
5. Is summary given of results of size investigation, field and lab testing, and stability analyses, including cause(s) of the slide?			
6. Is as-built cross section (used for slide stability analysis) included and does cross section show major soil and rock layers and water table location as determined from drilling and sampling?			
7. Is location of slide failure plane (determined from slope indicators and/or drilling) shown on the slide cross section?			
8. Are soil strength values, soil unit weights, and water table elevation (s) (used in the design stability analyses) shown on the slide cross section?			
9. For existing active slide, was soil strength along slide failure plane backfigured using a safety factor equal to 1.0 at time of failure?			
10. Is the following included for each proposed correction alternative:			
a. Cross section of proposed alternative?			
b. Estimated safety factor?			
c. Estimated cost?			
d. Advantages and disadvantages?			

EXHIBIT 6.35 Sample of Landslide Correction Checklist (Page 1 of 2)

Landslide Correction Checklist

Project: _____

Location: _____

Prepared by: _____ **Date:** _____

Components (continued)	**Check Appropriate Box**		
	Yes	**No**	**Not Applicable**
11. Is recommended correction alternative given?			
12. Does proposed correction alternative provide a minimum FS = 1.25?			
13. Have the most feasible and cost-effective correction alternatives been considered for the particular slide problem? (typical correction methods include buttress, shear key, rebuild slope, surface drainage, subsurface drainage - interceptor drain trenches or horizontal drains - and retaining structures).			
14. If horizontal drains are proposed as part of slide correction, has subsurface investigation located definite water bearing strata that can be tapped with horizontal drains?			
15. If a toe counterberm is proposed to stabilize an active slide, has field investigation confirmed that the toe of the existing slide does not extend beyond the toe of the proposed counterberm?			
16. Construction considerations:			
a. Where proposed correction will require excavation into the toe of an active slide (such as for buttress or shear key) has the construction backslope FS been determined?			
b. Has seasonal fluctuation of groundwater table been determined and was highest water level used in computing open excavation backslope FS?			
c. If open excavation FS is near 1.0, has excavation stage construction been proposed?			
d. Should slide repair work only be allowed during driest period or the year?			
e. Should stability of excavation backslope be monitored?			
17. Are recommended contract specifications provided?			

Comments _____

_____

EXHIBIT 6.35 Sample of Landslide Correction Checklist (Page 2 of 2)

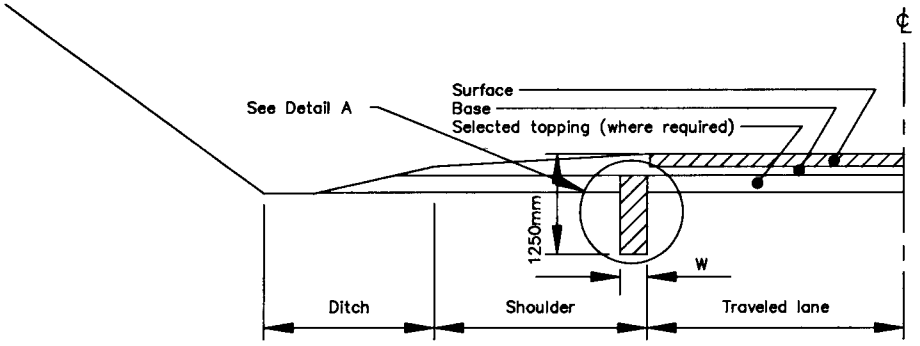

Shoulder

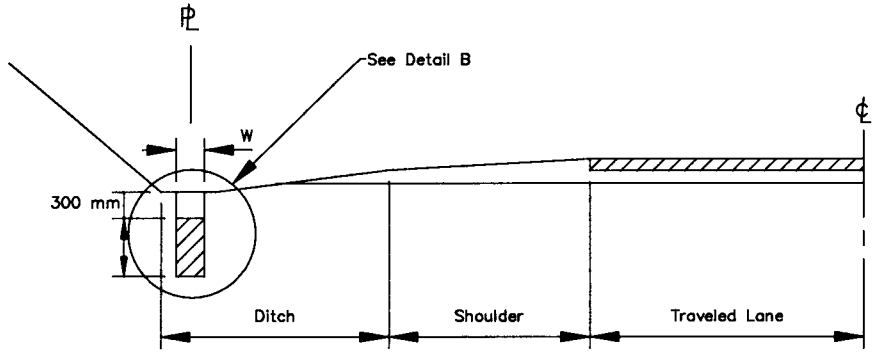

Flat Bottom Ditch

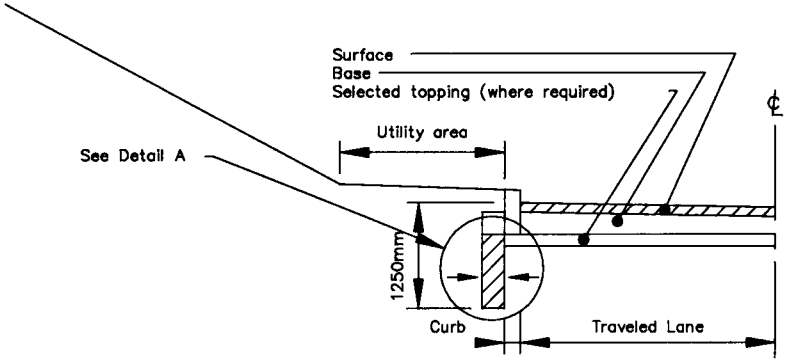

Curb and Gutter

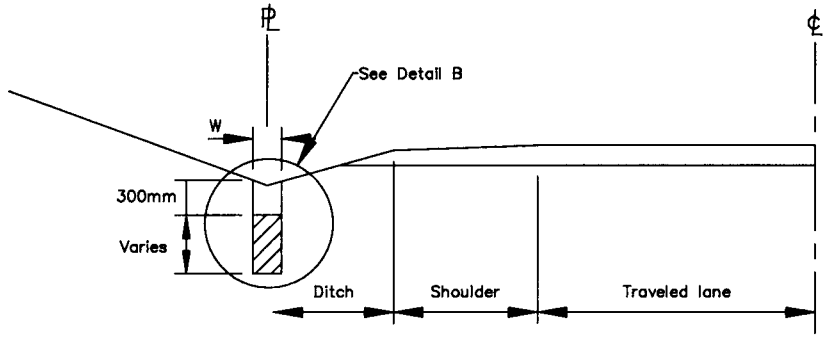

Vee Ditch

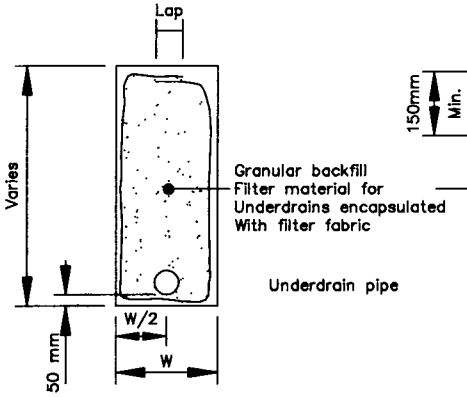

Detail A

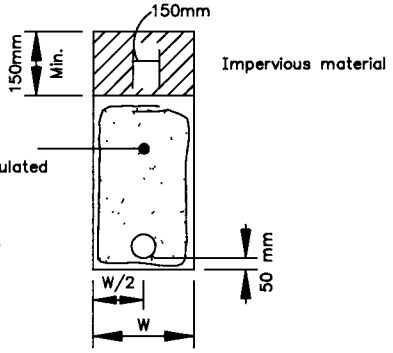

Detail B

Minimum underdrain grade shall be 0.5 percent.

Underdrain Pipe Diameter Millimeters	Minimum Trench Width (W) Millimeters
100	300
150	375
200	750
300	900

No Scale

Exhibit 6.36 Typical Underdrain Installation for Roadbeds and Ditches

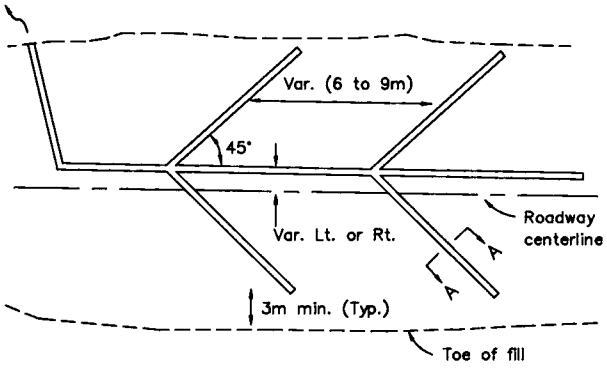

Herringbone Drainage Pattern
(Parallel to Centerline)

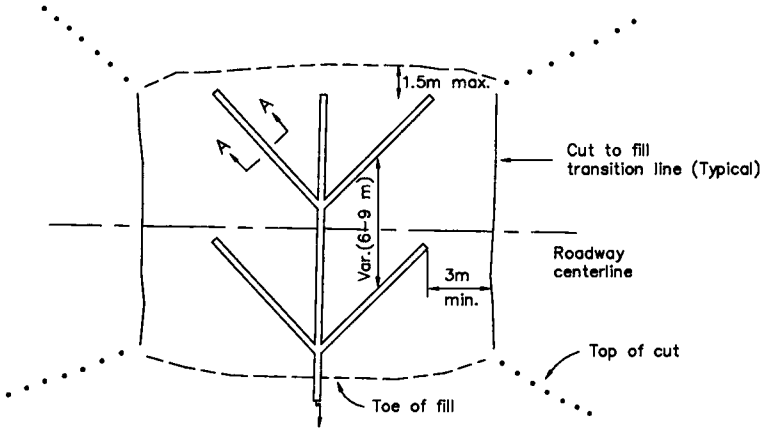

Herringbone Drainage Pattern
(Normal to Centerline)

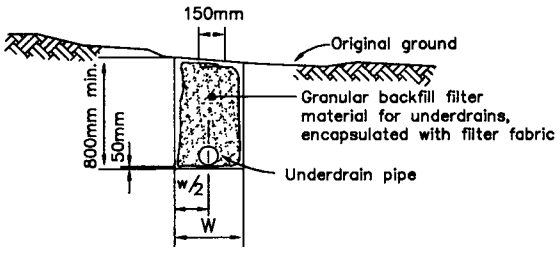

Section A–A

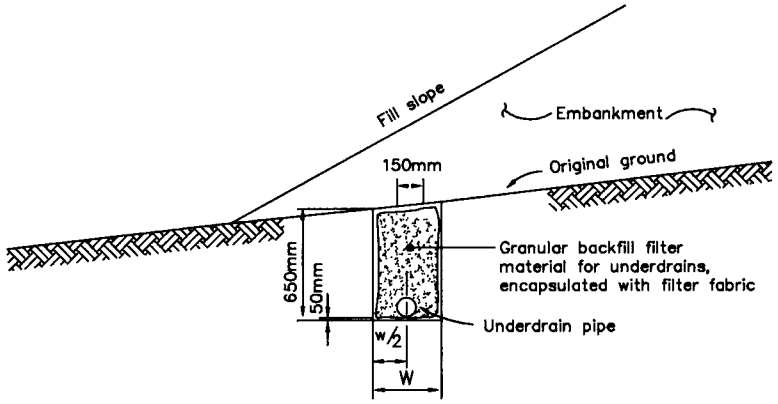

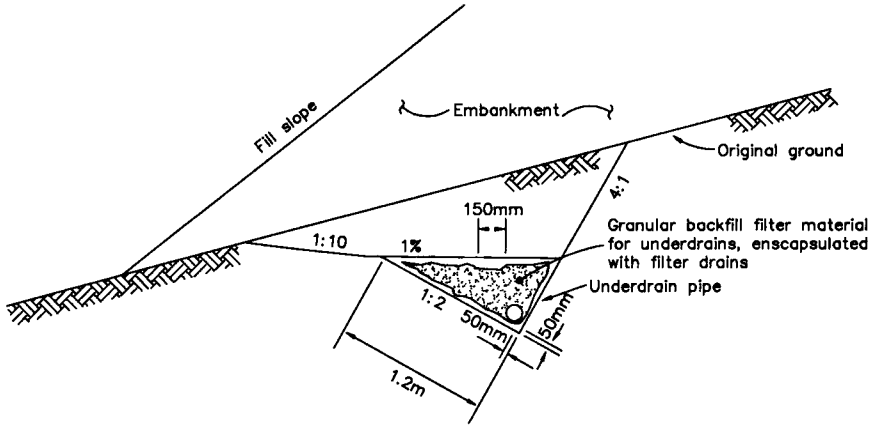

Underdrain Pipe Diameter (Millimeters)	Minimum Trench Width (Millimeters)
100	300
150	375
200	750
300	900

No Scale

Exhibit 6.37 Typical Underdrain Installation in Embankment Areas

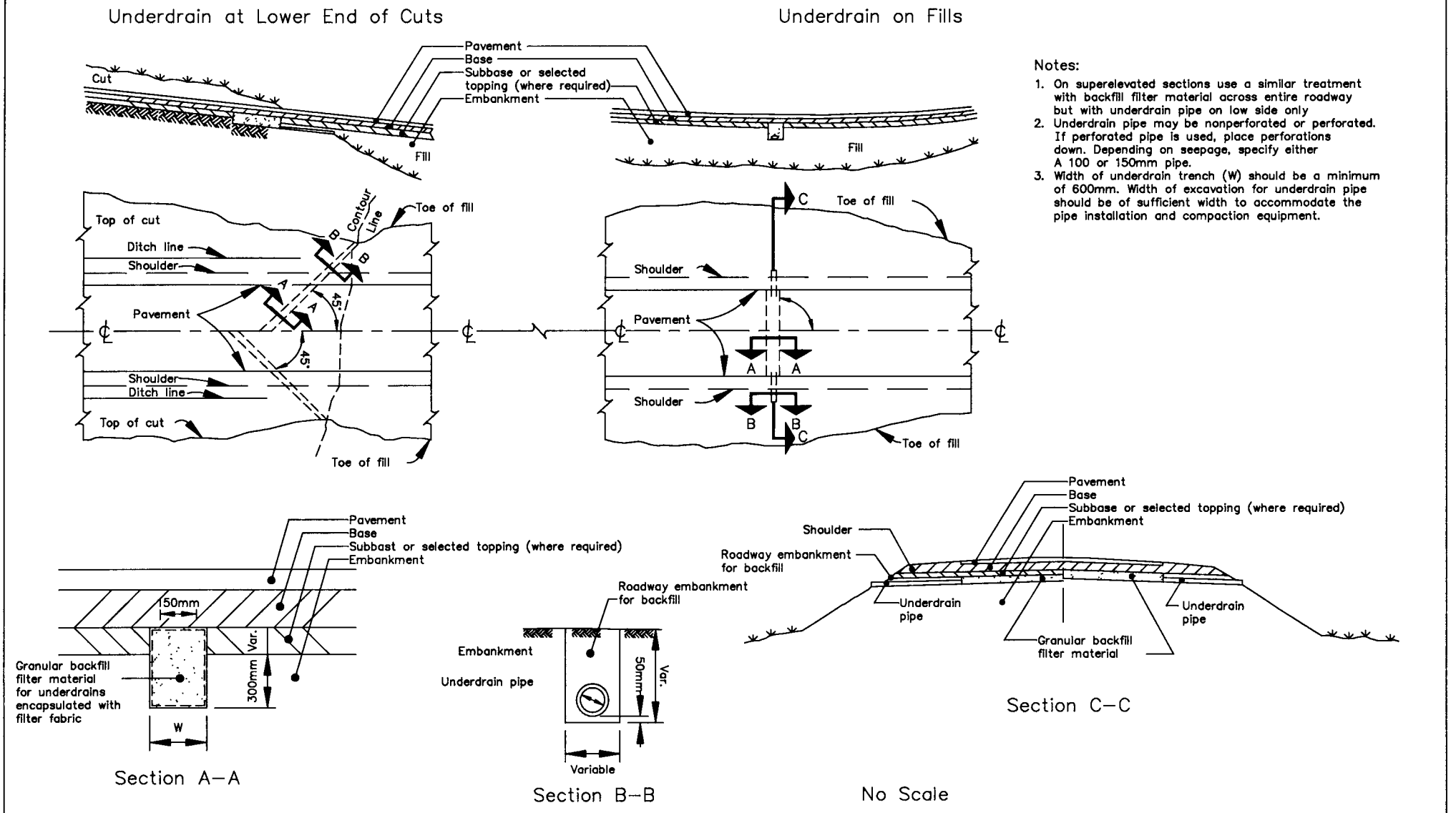

Notes:

1. On superelevated sections use a similar treatment with backfill filter material across entire roadway but with underdrain pipe on low side only
2. Underdrain pipe may be nonperforated or perforated. If perforated pipe is used, place perforations down. Depending on seepage, specify either A 100 or 150mm pipe.
3. Width of underdrain trench (W) should be a minimum of 600mm. Width of excavation for underdrain pipe should be of sufficient width to accommodate the pipe installation and compaction equipment.

Exhibit 6.38 Typical Underdrain Installation Beneath the Roadbed

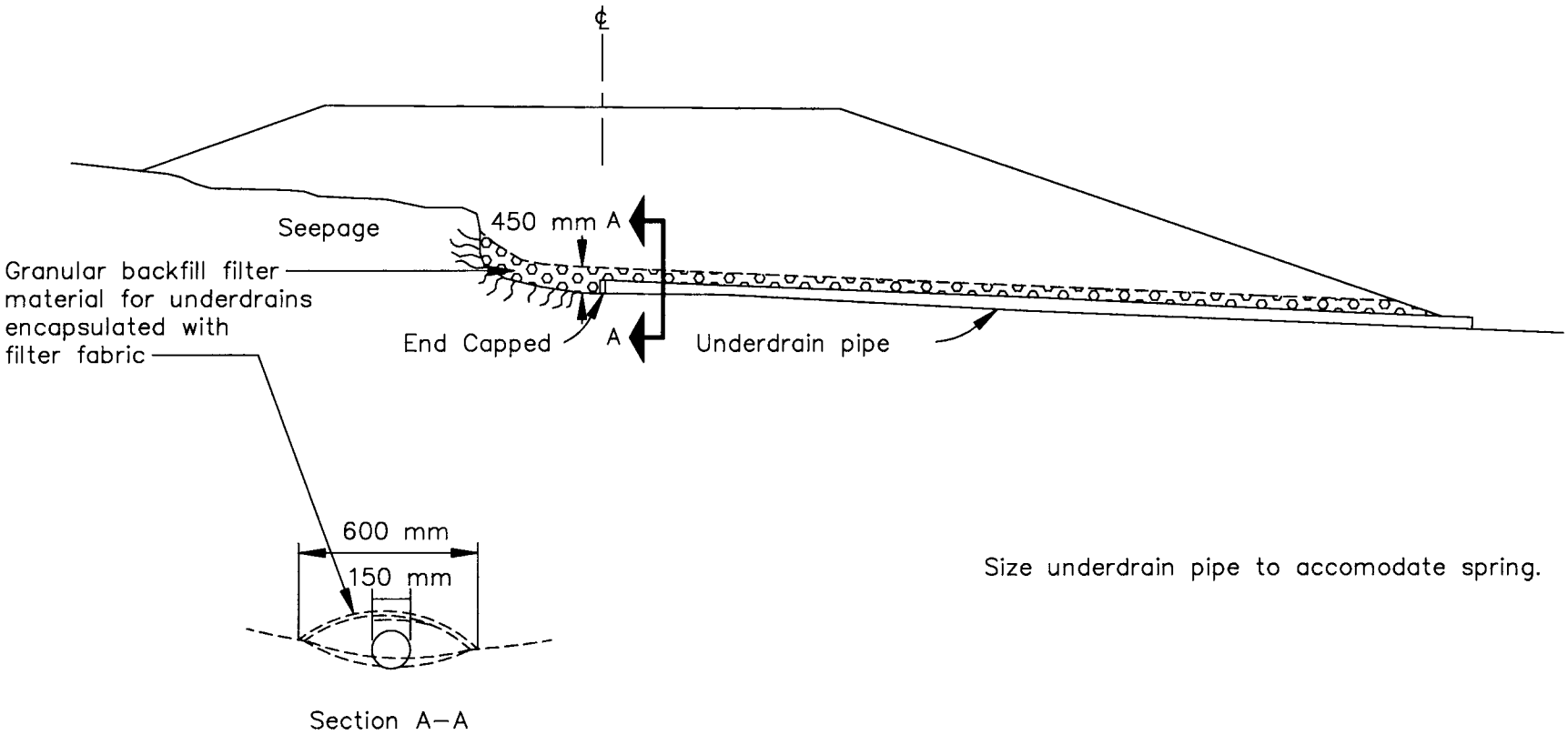

Size underdrain pipe to accomodate spring.

No scale

Exhibit 6.39 Typical Underdrain Installation for Spring Areas

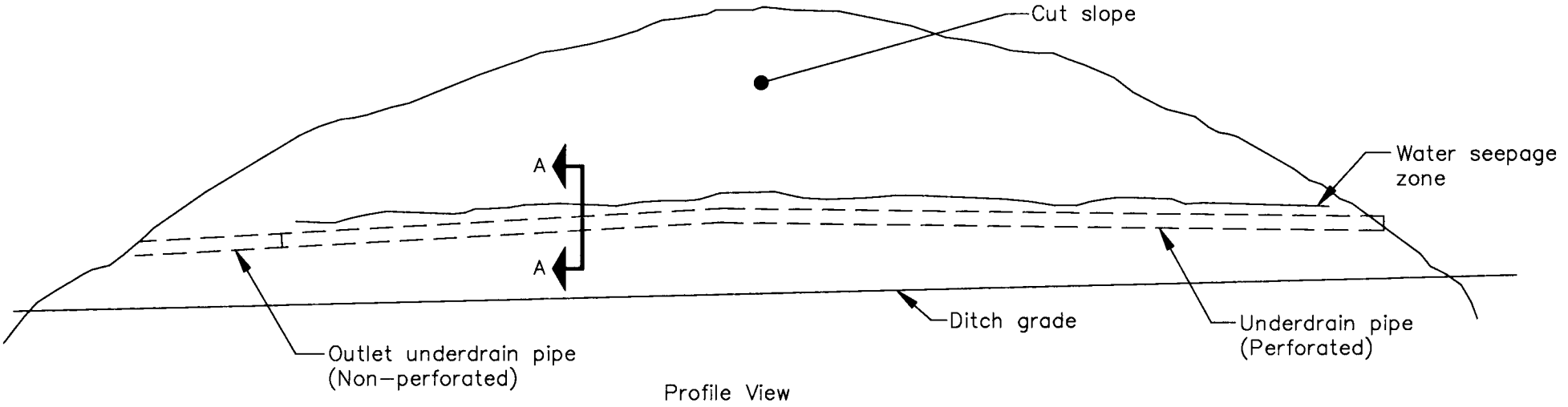

Profile View

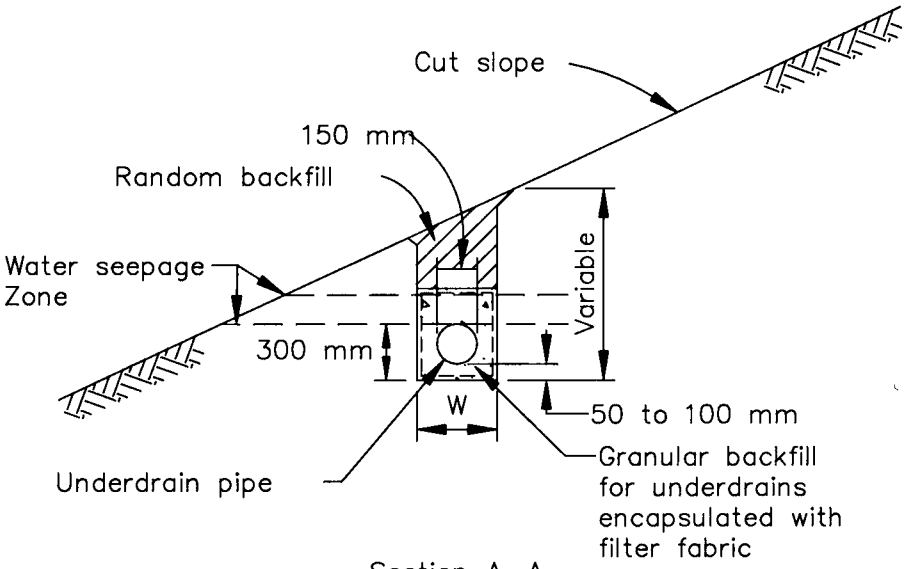

Section A–A

Underdrain Pipe Diameter Millimeters	Minimum Trench Width (W) Millimeters
100	300
150	375
200	750
300	900

No Scale

Exhibit 6.40 Typical Underdrain Installation for Backslopes