CHAPTER 9 - HIGHWAY DESIGN

TABLE OF CONTENTS

Page

9.1 GENERAL 9-1

A. Role of the Designer
B. Design Standards
  1. Policy
  2. Design Exceptions
  3. Mitigating Design Exceptions
C. Computer Aided Design and Drafting (CADD)

9.2 GUIDANCE AND REFERENCES 9-8

9.3 INFORMATION GATHERING 9-10

A. Design Study
B. Surveying and Mapping
C. Accident Data
D. Existing Plans
E. Agency Contacts

9.4 PS&E DEVELOPMENT 9-13

A. Geometric Design 9-13
  1. Aesthetic Consideration in Highway Design
  2. Horizontal and Vertical Alignment Relationship
  3. Establish Control Points
  4. Horizontal Alignment
  5. Vertical Alignment
  6. Sight Distance
  7. Geometric Cross Section
    a. Pavement Structure
    b. Profile Grade Location and Cross Slope
    c. Lane and Shoulder Widths
    d. Foreslopes
    e. Roadway Ditches
    f. Cut and Fill Slopes
    g. Rock Cut Slopes
    h. Serrated Slopes
    I. Slope Rounding and Clearing Limits
  8. Miscellaneous Roadway Widening
  9. RRR Considerations

TABLE OF CONTENTS

9.4 PS&E DEVELOPMENT (continued) **Page**

B. Intersection Design 9-58

1. Intersection Types
2. Design Vehicle
3. Alignment
4. Sight Distance
5. Channelization
6. Traffic Islands
7. Left-Turn Lanes
8. Right-Turn Lanes

C. Earthwork Design 9-71

1. Clearing and Grubbing
2. Removal of Structures and Obstructions
3. Classification of Roadway Excavation
4. Shrink and Swell Factors
5. Design Cut and Fill Slopes
6. Slides
7. Balancing Earthwork
8. Haul
9. Mass Diagram
10. Computing Structural Excavation Quantities
11. Subgrade Treatment
12. Roadway Obliteration
13. Design Steps Using IHDS

D. Earth Retaining Structures 9-78

1. Design considerations
   a. Determination of Need
   b. Alternative Wall Systems
   c. Design Guidelines
   d. Selection of Wall Types
   e. Retaining Wall Systems
2. Contracting Procedures
3. Consideration of New Retaining Wall Systems

TABLE OF CONTENTS

9.4 PS&E DEVELOPMENT (continued) **Page**

E. Drainage Design ... 9-89
1. Channels and Ditches
2. Culverts
3. Downdrains and Pipe Anchors
4. Catch Basins and Inlets
5. Storm Drains/Storm Sewers
6. Underdrains and Horizontal Drains
7. Riprap/Slope Protection
8. Energy Dissipators and Outlet Basins
9. Erosion Control

F. Other Design Elements ... 9-93
1. Highway Lighting
2. Fencing
3. Cattleguards
4. Pedestrian Facilities
5. Parking Areas
6. Accommodation of the Disabled
7. Landscaping and Roadside Development

G. Right-of-way and Utilities ... 9-105
1. Right-of-way
2. Utilities
3. Railroad Encroachments
4. Railroad Grade Crossings
5. Material Source Reclamation Plans

H. Reviews ... 9-127

I. Plans ... 9-129
1. Bridge Plans
2. Standard Drawings

J. Engineer's Estimate ... 9-131
1. Computation of Quantities
2. Computation of Contract Time
3. Development of Prices

TABLE OF CONTENTS

9.4 PS&E DEVELOPMENT (continued) **Page**

K. Specifications 9-145
1. Types of Specifications
2. Developing Special Contract Requirements
3. Writing Special Contract Requirements

L. Contract Assembly 9-153

9.5 APPROVALS 9-154

9.6 STANDARD FORMAT 9-155

A. Plans
1. Format
2. Drafting Standards
3. Organization of Plans
a. Title Sheet
b. Typical Sections
c. Summary of Quantities
d. Tabulation of Quantities
e. Plan and Profile
f. Bridges
g. Drainage Facilities
h. Traffic Control Plan
i. Standard Drawings, Standard Details, and Special Details
j. Environmental Mitigation
k. Cross Sections
l. Contiguous Projects

B. Specifications
C. Estimate
D. PS&E Package

9.7 DIVISION PROCEDURES 9-166

EXHIBITS

LIST OF FIGURES

Figure		Page
9-1	Superelevation Transition on Short Tangents Between Broken-Back Curves	9-19
9-2	Superelevation Transitions for Broken-Back Curves	9-20
9-3	Determining Flat Sections Between Reversing Curves with Short Tangents	9-21
9-4	Reserved	
9-5	Lateral Clearance for Stopping Sight Distance	9-31
9-6A	Desirable Horizontal Stopping Sight Distance	9-32
9-6B	Minimum Horizontal Stopping Sight Distance	9-33
9-7	Determining Low Points on Vertical Curves with Unequal Grades	9-34
9-8	Eliminating Broken-Back Vertical Curves	9-36
9-9	Typical Road Cross Section Elements	9-39
9-10	Typical Cut Slope End Treatment	9-42
9-11	Falling Rock Control	9-46
9-12	Rolling Rock Control	9-47
9-13	Serrated Slopes	9-49
9-14	Right Turn Deceleration Lanes for Non-controlled Access Highways	9-51
9-15	Right Turn Acceleration Lanes for Non-controlled Access Highways	9-52
9-16	Slow Moving Vehicle Turnout	9-54
9-17	Left Turn Storage Guidelines for Unsignalized Two Lane Highway Intersections	9-65
9-18	Left Turn Storage Lengths for Unsignalized Two Lane Highway Intersections (60 km/h)	9-66
9-19	Left Turn Storage Lengths for Unsignalized Two Lane Highway Intersections (80 km/h)	9-67
9-20	Left Turn Storage Lengths for Unsignalized Two Lane Highway Intersections (100 km/h)	9-68
9-21	Right Turn Lane Guidelines	9-69
9-22	Right Turn Pocket or Taper	9-70

LIST OF TABLES

Tables		Page
9-1	Design Standards	9-3
9-2	Minimum Signing for Curves and Turns	9-6
9-3	Example Listing of a Determination of Superelevation Rates	9-23
9-4	Sight Distance Standards	9-29
9-5	Effects of Grades on Stopping Sight Distance	9-30
9-6	(K) Values for Determining Lengths of Vertical Curves	9-37
9-7	Foreslope Ratios	9-41
9-8	Desirable and Maximum Slopes	9-44
9-9	Intersection Design Vehicle	9-59
9-10	Sight Distance Adjustment Factor	9-60
9-11	Sight Distance for Turning Vehicles	9-61
9-12	Offset Distances for Barrier Curb	9-62
9-13	Additional Left Turn Storage for Trucks at Unsignalized Two-Lane Highway Intersections	9-64
9-14	Guidelines for Railroad Crossing Protection	9-124
9-15	Correct Usage of Words and Phrases	9-150
9-16	Lettering Sizes and Styles	9-157

CHAPTER 9 - HIGHWAY DESIGN

9.1 GENERAL

This chapter provides policies, procedures, and methods for developing and documenting the design of highways. It also includes the preparation of plans, specifications and estimates (PS&E) for new highway construction, reconstruction and RRR (Resurfacing, Restoration and Rehabilitation) improvements.

A. Role of the Designer. The designer shall gather all the engineering and environmental input required to provide a complete and acceptable PS&E assembly. The PS&E package depicts the commitments made during the planning, programming, and project development stages.

The designer is responsible for applying guidance from Chapter 8, Safety and Chapter 9, Highway Design. In addition, the following named chapters provide information on collecting background data for the development of the PS&E.

- Chapter 2 - Planning and Programming. Information on the planning and programming functions, interagency agreements, and general data on the scope and funding levels for individual projects are covered in this chapter.

- Chapter 3 - Environment. This chapter provides information about environmental requirements and public involvement. Environmental documents will include commitments made for mitigation and public acceptance of the project. The designer will review all environmental documents for commitments made during the conceptual studies phase that affect development and construction of the project or operation of the highway following construction. Any proposed deviation from the mitigating measures and commitments must be coordinated with the Division environmental unit and affected resource agencies.

- Chapter 4 - Conceptual Studies. These studies result in a recommended roadway location and basic design criteria for a facility. Such studies are generally developed in conjunction with the environmental process. Conceptual studies generally include significant input from the owner agency and from other interested parties.

- Chapter 5 - Survey and Mapping. The survey unit provides information on the field survey, property, utility locations, and related data. The data collected provides topographic maps, site maps, right-of-way and utility plats, and base information for developing the design.

- Chapter 6 - Geotechnical. The geotechnical unit provides subsurface data and recommendations for earthwork slopes, materials, and pavement structure design. When applicable the report includes foundation design for bridges, retaining walls, and other structures, along with landslides and subsurface water information.

- Chapter 7 - Hydrology/Hydraulics. The hydraulics unit provides runoff data for roadside drainage design. This unit also provides data to the structural unit (for major structures) and designs major hydraulic structures and special water resource features.

- Chapter 10 - Structural Design. The structural unit designs bridges, major retaining structures, and special structural elements. The unit will provide complete structural plans, proposed specifications, and an estimate of cost for incorporation into the PS&E package.

9.1.B. Design Standards.

B. Design Standards. Guidelines for geometric design have changed significantly over the years. Today's emphasis is on balancing the factors of safety, economy, environmental concerns, energy conservation, and social effects with the traditional concerns for volume and speed.

The FHWA has adopted policies and standards for Federal-aid highway design that recognize all these precepts. They are listed in 23 CFR 625 and supplemented in the FAPG. These standards basically adopt AASHTO policy and are applicable to Federal Lands Highway design.

Other Federal agencies, States and many local highway agencies have adopted standards implementing AASHTO policy with supplemental and clarifying criteria.

Table 9-1 lists the principle FLH programs and corresponding design standards. The appropriate standards are normally identified in the planning, programming, or conceptual studies document for the project. Occasionally the designer will need to determine which standards are approved for use on a specific project. The appropriate unit chief should be consulted.

9.1.B. Design Standards. (continued)

The design criteria shown in Table 9-1 represent both desirable and minimum standards. Each design should be evaluated on the basis of desirable design criteria for the safest overall design.

Cost, social and environmental factors often require standards that are less than desirable. This is particularly true for RRR projects. When these factors dictate design elements resulting in less than minimum standards, the designer must evaluate the consequences and document the decision in accordance with Section 9.1.B.2., Design Exceptions.

Table 9-1
Design Standards*

Type of Roadway	Applicable Standards
Forest Highway and Public Lands Highways	23 CFR 625 and FHWA approved State or local standards.
National Park Roads and Parkways	NPS standards (1984) and 23 CFR 625.
Indian Reservation Roads	25 CFR 170, BIA design manual and 23 CFR 625.
FAA Roads	23 CFR 625.
BLM Access Roads	FAPG G6090.13 and BLM Manual, Section 9113 - Roads.
Defense Access Roads	23 CFR 625 or FHWA approved State or local standards.
FS Roads and Trails	FS Handbook (FSH 7709.11).
ERFO	Standards determined by classification of highway to be repaired or reconstructed. (See ERFO Manual)

* When there is a conflict between agency standards and 23 CFR 625, the design criteria should be mutually resolved with the client agency.

1. Policy. It is FLHO policy to use approved standards for the design of projects funded from the highway trust fund. For projects funded through owner-agency appropriations, the owner-agency's standards apply, provided they are consistent with good engineering practice.

a. Design Criteria. The 1994 AASHTO publication, *A Policy on Geometric Design of Highways and Streets*, (also known as the Green Book) is the principle source for highway design criteria. Supplements to the Green Book include other AASHTO and technical publications adopted as acceptable criteria and other Federal, State and local specifications for use on their roads. These acceptable supplements are referenced throughout this manual.

b. Design Speed. A principle element in establishing design criteria is the selection of the design speed for the facility. The design speed should be consistent with the speed the driver expects. It should be logical for the topography, adjacent land use, and type of highway. The design speed must equal or exceed the posted or regulatory speed limit of the completed facility. The Green Book, pages 62 to 68, explains the philosophy of design speed. In most instances, the owner agency has the authority to establish the posted speed for the facility. When necessary, regulatory limits should be recommended to the owner-agency to provide guidance in setting posted speeds. However, when system-wide statutory speed limits prevail (such as the national 55 mph limit) they mandate posted speed.

c. RRR Projects. The design policy for RRR projects is the same as for new construction; however, designing these projects to approved standards may not be possible. Alternative actions should be analyzed when environmental concerns, social impacts, extraordinary costs or limited funds prevent construction to full standards. Analysis should include consideration of adjacent highway sections and the relationship to future improvements, as well as existing conditions. When the analysis concludes that approved standards are not practical, the designer shall document each exception to the standards as outlined in Section 9.1.B.2.

2. Design Exceptions. When approved standards are not obtained, the designer must document all exceptions. There are 13 principle *design elements* that are considered controlling criteria and which require documentation each time they are unobtainable:

(1) Design speed.
(2) Lane width.
(3) Shoulder width.
(4) Bridge width.
(5) Structural capacity.
(6) Horizontal curvature.
(7) Vertical curvature.
(8) Gradient.
(9) Stopping sight distance.
(10) Cross slopes.
(11) Superelevation.
(12) Horizontal clearance to structures (tunnels & bridge underpasses)
(13) Vertical clearance.

In addition to these controlling criteria, the designer should document other elements of operational efficiency or safety not meeting standards. Exhibit 9.1 presents a sample format for documenting design exceptions on a project.

This documentation supporting the design exception decision shall become a part of the PS&E package presented to the owner agency.

Documentation of design exceptions should include an explanation of the conditions prohibiting full standards and a description of the mitigating measures proposed to maximize operation and safety of the facility.

3. Mitigating Design Exceptions. Tort liability is a major concern of the Government. The designer must ensure that the design process is in compliance with all applicable standards.

The exception to standards outlined in FLHM 3-C-2 permits the designer to vary the controlling criteria when alternatives merit precedence over standards.

The project plans should include curve signs, turn signs, and advisory speed plates for mitigation purposes when posted limits cannot be reduced. The MUTCD specifies installation of advisory speed plates following a determination of the safe speed by accepted traffic engineering procedures.

An accepted field method of determining safe speed for horizontal curvature uses a slope meter, more commonly referred to as the *ball bank indicator*. When advisory speed plates are warranted, the project engineer should be provided with a listing of curve signs, turn signs, and advisory speed plates needed for the project as determined by theoretical design speed criteria. Signing normally appears on the plans but occasionally supplemental studies dictate the need to forward additional data to the field.

The project engineer verifies the safe speed of the curves in question using the ball bank indicator or other accepted traffic engineering procedures. The engineer can contact a local State, county, or municipal traffic engineer to arrange for a speed determination if a ball bank indicator is not available on a project vehicle. See pages 143-145 and Figure III-4 in the Green Book for a discussion on the relationship of ball bank readings and safe speeds. Also see Figure 9-4, Safe Speeds.

Table 9-2 establishes signing requirements for curves and turns.

Some agencies have criteria other than what is shown in Table 9-2. The designer should check the agencies' standards for conflicts between the two and use the more conservative signing criteria.

Determining the appropriate standards to be used for roadway lane and shoulder widths is sometimes difficult. In some cases, the project may be the only improvement on a route for many years. In other cases, the maintaining authority may have a policy that only resurfacing projects will be applicable to a route to use available funding for higher priority transportation facilities. In these instances, the compatibility with adjacent sections of the highway may be the governing criteria. When compatibility with adjoining roads is the controlling factor, a design exception is appropriate.

Extraordinary cost or adverse environmental impacts could also result in design exceptions. When the highway operating agency's approved transportation plan specifies less than the standard widths for a route, this width requires documentation as a design exception.

The remaining controlling criteria are usually limited to site specific locations. The designer must mitigate these design exceptions through the normal design process.

Some RRR projects cannot be surveyed cost effectively in enough detail to identify many of the exceptions to the controlling criteria, such as super-elevation, grades, etc. These projects place considerable emphasis on the engineering judgment of the designer. Any on-site study or field review for RRR projects should document any identifiable exceptions to standards.

Table 9-2
Minimum Signing[1] for Curves and Turns

Safe Speed [2] (km/h)

Posted Speed MPH	km/h	30 or less	40	50	55	60	70	80	90	100
60	100	TA	TA	TA	CA	CA	CA	C	C	
55	90	TA	TA	TA	CA	CA	C	C		
50	80	TA	TA	TA	CA	C	C			
45	70	TA	TA	TA	C	C				
40	60	TA	TA	T	C					
35	55	TA	T	T						
30	50	T	T							
25	40	T								
20 or less	30									

A = Advisory Speed Plate

C = Curve Warning Sign, Reverse Curve Sign (or Winding Road Sign)

T = Turn Sign, Reverse Turn Sign (or Winding Road Sign)

Notes: [1]See MUTCD (Section 2C-4 and 2C-5).
[2]Determine the safe speed by use of the ball bank indictor.

9.1.C. Computer Aided Design and Drafting.

C. Computer Aided Design and Drafting (CADD). Information on Computer Aided Design and Drafting is included in the Federal Lands Highway *CADD Manual.*

9.2 GUIDANCE AND REFERENCES

The publications listed in this section provided much of the fundamental source information used in the development of this chapter. While this list is not all inclusive, the publications listed will provide the designer with additional information to supplement this manual.

A Policy on Geometric Design of Highways and Streets. AASHTO. 1994.

Highway Capacity Manual. TRB Special Report No. 209. Transportation Research Board. 1985.

Manual on Uniform Traffic Control Devices (MUTCD). DOT, FHWA. 1988.

Traffic Control Devices Handbook. DOT, FHWA. 1983.

Park Road Standards. U.S. Department of the Interior, National Park Service. 1984.

Standard Specifications for Construction of Roads and Bridges on Federal Highway Projects (FP-96). DOT, FHWA. 1995.

Standard Specifications for Structural Supports for Highway Signs, Luminaries and Traffic Signals. AASHTO. 1986.

Guide for Development of Bicycle Facilities. AASHTO. 1991.

A Policy on Design of Urban Highways and Arterial Streets. AASHTO. 1973. (Out of Print).

Railroad-Highway Grade Crossing Handbook. Report No. FHWA-TS-86-215, 1986.

Intersection Channelization Design Guide. NCHRP 279.

An Informational Guide for Roadway Lighting. AASHTO. 1984.

A Guide of Accommodating Utilities Within Highway Right-of-Way. AASHTO. 1994.

A Guide for Erecting Mailboxes on Highways. AASHTO. 1994.

Roadway Lighting Handbook. DOT, FHWA. 1978 (and addendum 1983).

Americans with Disabilities Act (ADA) Accessibility Guidelines. Architectural and Transportation Barriers Compliance Board. 1994

Roadside Design Guide. AASHTO. 1989

A Guide to Standardized Highway Barrier Hardware. AASHTO-AGC-ARTBA. 1995

Recommended Procedures for the Safety Performance Evaluation of Highway Features. NCHRP Report 350. TRB. 1993

Design Risk Analysis (Volume I and II). FHWA-FLP-91-001. FHWA. 1991

Standard Practice for Use of the International System of Units (SI). The Modernized Metric System. E380-93. ASTM. 1993

Trail Design Manual "Trails for the Twenty-First Century": Planning, Design, and Management Manual for Multi-use Trails. Rails to Trails Conservancy, 1993

Designing Safer Roads. TRB Special Report No. 214. Transportation Research Board. 1987.

Horizontal Alignment Design Consistency for Rural Two-Lane Highways. FHWA-RD-94-034. FHWA. 1995

9.3 INFORMATION GATHERING

The designer is directed to Chapter 4, Conceptual Studies, for information on scoping, background data, preliminary design standards, and mitigating measures before beginning detailed design activities.

A. Design Study. A design study documents considerations and conclusions reached during the development of a project. Although it may not always result in a formal document, the study provides a history of the project from start to completion of the PS&E.

When the designer has completed the PS&E, the following applicable data should be available in the files:

- Project Description:

  - Description of existing conditions.
  - Comparison of proposed work with "no build" alternative.
  - Extent of selection and examination of alternatives.
  - Identification of deficiencies with costs to correct.
  - Design parameters used.

- Evaluation of any substantial change in commitments made in the environmental document.

- Statement regarding hearings advertised, held, or required.

- Cost estimates including applicable right-of-way acquisition, utility relocation, permits, project costs, construction engineering, incentive/disincentive clauses, and project agreements.

- Access control requirements.

- Reasons for deviations from adopted policy and standards.

- Traffic Data:
  - Present and design year average daily traffic (ADT) and seasonal average daily traffic (SADT), when applicable, with percentage of (S)ADT used for design hour volume (DHV), for directional split (D), and for trucks (T).
  - DHV for two-lane, two-way highways, crossroads, and frontage roads.
  - Turning movements.

- Special Traffic Data:

  - Noise impact studies.
  - Signal warrants.
  - Air quality studies.
  - Illumination warrants.
  - Left turning movements.
  - Traffic control plans.
  - Other studies as required.

- Accident history.

- Geotechnical and Materials Engineers' reports.

- Involvements on railroad right-of-way such as crossings, encroachments, etc.

- Utility involvements.

- Permit requirements or agreements.
- Roadway sections, including all new or widened bridges.
- Pavement structure section.
- Drainage consisting of hydraulic concepts, floodplain studies, culvert selection, etc.
- Erosion control.
- Illumination.
- Fencing.
- Signing.
- Signalization.
- Roadside development such as landscaping, aesthetic treatments, etc.
- Traffic control in terms of delineation, traffic barriers, pavement marking, impact attenuators, etc.
- Traffic control plans through construction.
- Related data affecting the ultimate construction and operation of the facility such as right-of-way considerations.

B. Surveying and Mapping. Chapter 5 covers the surveying and mapping information the designer can expect to receive. Ideally the design, survey, geotechnical and conceptual study engineers and the owner agency review the proposed work on the ground and determine the information and limits of the survey required to complete the project.

When field reviews are not possible, it is still beneficial for the designer and survey and mapping/location engineer to discuss the field information required. In many cases the designer's experience with new construction, reconstruction, and RRR projects can increase the effectiveness of the survey crew.

At some point in the project development process the designer usually provides the appropriate survey unit with the information to stake the project in the field. This could include notes to establish centerline, set slope stakes, clearing limits, reference points, right-of-way, and other control points necessary to complete the work. The designer shall keep the design files purged so the information provided for the stakeouts is current, correct, and reflects the design criteria established for the project. All notes prepared for field use will require checking to prevent the possibility of providing incorrect data.

C. Accident Data. On all projects the accident history should be analyzed and potentially hazardous features and locations identified to determine appropriate safety enhancement. A study of accidents by location, type, severity, contributing circumstances, environmental conditions, and time periods may suggest possible safety deficiencies. The designer should refer to Chapter 8 for details on data collection, accident investigation, and analysis. Refer to Chapter 4 for details on obtaining other necessary accident data.

D. Existing Plans. An excellent source of information for reconstruction and RRR projects is *as-constructed* plans. Each Federal Lands Highway Division office has access to a set of *as-constructed* plans for its completed projects. They contain information on alignments, drainage, bridges, right-of-way, pavement structure, and other engineering features.

Local government and other Federal agencies can also provide *as-constructed* plans and a variety of information relating to a specific section of highway. The NPS maintains microfilm files of as-constructed plans.

The designer should contact the utility company first to determine the project's effect on utilities. The utilities usually are on the right-of-way by permit from the highway operating agency.

While information from as-constructed plans and from other agencies has significant value, the data should not be blindly accepted as fact. Field verification is necessary.

E. Agency Contacts. The designer will usually find that the primary agency contacts were established during the environmental and conceptual studies phases of the project by environmental and location personnel.

The designer needs to continue to coordinate with these agency contacts to achieve a smooth transition between the design and construction phases.

The SEE study team membership comprises the principle agency contacts for projects that require an EIS or FONSI. On projects with a CE, the designer may initiate contact with other agencies regarding permit requirements and clearances.

The FHWA Federal-aid Division office may participate in the development of the project. The extent of the involvement varies from office to office, but using the expertise available in the FHWA Federal-aid Division Offices provides an independent review of the design.

On National Park Service projects, the coordinator in the Denver Service Center, or if appropriate, the National Park Service Support Office is the principal contact for input and review of the design alternatives. The NPS is responsible for coordination with other agencies and outside disciplines when applicable.

When using other agency funds, the project agreement should address the principle contacts and responsibilities for coordination.

The interagency interdisciplinary approach to design is fundamental to obtaining an end product that will serve the public and be consistent with Federal, State, and local goals, objectives and standards.

Early contact and coordination with cooperating agencies ensures an end product with a minimum of conflict and controversy.

9.4 PS&E DEVELOPMENT

This section prescribes procedures and policies for the preparation of PS&E's.

Plans are graphic representations (such as typical cross sections, drawings or details) of the proposed work.

Specifications is a general term applied to all directions, provisions, and requirements concerning the quality and performance of the work for a project.

The *estimate* consists of the engineer's cost analysis to perform the work. It serves as the basis of the probable construction amount, to evaluate bidders' proposals, and for programming funds for construction, related engineering, utility work, etc.

The *PS&E* package is a term used to describe the contract documents (plans, specifications, and estimate of cost) for performing the work to construct a highway facility. The following discussions will address those decisions generally made by the highway designer within the constraints imposed by earlier environmental and engineering studies.

A. Geometric Design. Geometric design defines the physical dimensions of the visible features of a highway such as the alignment, sight distance, width, slopes, grades, roadside treatment, and related issues. Geometric design standards relate to the functional classification of highways, traffic density and character, design speed, capacity, safety, terrain, and land use.

Design highways to a standard as consistent as practical. Evaluating the route between major terminal points will aid in keeping the overall design features of a route uniform on a project-by-project basis.

Limited funding may restrict the total reconstruction of a highway segment. When this is the case, the designer should consider *stage construction* where the grading is completed first and the paving at a later time. This assures that the basic geometrics (alignment, grades, and cross section) are of an established acceptable standard without need of further modification.

1. Aesthetic Consideration in Highway Design. The visual aspect of the highway is one of the fundamental elements of any geometric design. Visual impacts encompass the view both from and of the roadway. Curvilinear alignment fits the road to the terrain and provides a pleasing experience for the user.

Exhibit 9-2 illustrates several desirable and undesirable examples of highway design. It should be apparent from the exhibit that providing for visual comfort contributes to a more relaxing experience for the driver and provides the potential for better and safer traffic operations.

The designer should be familiar with the design controls found in the Green Book on pages 294 to 304. These criteria are basic to good geometric design, and adhering to them will enhance the visual qualities of the roadway.

From an aesthetic standpoint, bridges should blend in with curvilinear alignment. Bridges should be located entirely on tangents, curves, or transitions, but not on a combination of these. This may require minor adjustments in horizontal alignment such as spiral lengths.

Design superelevation to avoid or minimize unsightly kinks, humps, or dips in bridge railing or curbs. Bridges placed on sag vertical curves can have problems with appearance and aesthetic value.

The ultimate test for an aesthetically pleasing facility is whether it truly enhances the area through which it passes. A good designer attempts to achieve this goal on all designs.

2. Horizontal and Vertical Alignment Relationship. Horizontal and vertical alignments are mutually related and what applies to one is generally applicable to the other. The designer should visualize the completed facility in a three-dimensional mode to ensure that the alignments complement each other and enhance the good features of both. Excellence in a coordinated design will increase the usefulness and safety of the highway, encourage uniform speed, and make a positive contribution to the visual character of the road.

The Green Book covers the basic general guidelines for achieving coordination between line and grade. The criteria are of sufficient importance to summarize again as follows:

- The curvature and grades should balance, i.e., flatter curves used with flatter grades, and sharper curves with steeper grades.

- Tangent grade superimposed on tangent line, and vertical curves on horizontal curves, should be strived for at all times.

- Horizontal curves should lead vertical curves when they are superimposed so drivers can clearly see the direction the road is turning. The length of the vertical curve should preferably approach that of the horizontal curve.

- Sharp horizontal curves that are introduced at a pronounced crest or sag in the road grade create hazardous driving conditions, especially at night.

- Both horizontal curvature and profile grade should be as flat as possible at intersections where sight distance along both roads is important and vehicles may have to slow down or stop.

- On two-lane roads, the need for safe passing sections often supersedes the desirability for a well-coordinated line and grade. In these cases, work toward a long tangent section or a very gentle curvature section having sufficient passing sight distance.

- The alignment should enhance scenic views, whether natural or manmade. The highway should head toward, rather than away from, those views that are outstanding. It should descend toward those features of interest at a low elevation, and it should ascend toward those features best seen from below or in silhouette against the sky.

3. Establish Control Points. The designer's approach to balancing horizontal and vertical alignment is essentially the same using aerial photographs, contour maps, quad sheets, or other graphics showing the relief of the topography. The first step in coordinating both alignments is to establish the necessary physical control points that will set the parameters of the location. These control points can be either natural or manmade features such as mountain passes, summits, bodies of water, developed areas, intersecting roadways, archaeological or historic properties, and related constraints. In cases of reconstruction or RRR improvements, the existing right-of-way limits may become a primary control point.

The designer should plot a horizontal alignment through the established control points using splines, curve templates, shop curves, or freehand methods. These preliminary layout stages avoid or limit the use of straightedges and string lines to evaluate a curvilinear design properly.

In rolling or mountainous terrain, it is desirable to plot a rough profile to determine if the preliminary alignment will fit the vertical controls. This consists of scaling stations on the horizontal alignment and picking elevations from the contours.

A rough profile plot on a reduced scale ratio (such as 1:5000 horizontal and 1:500 vertical) is adequate to determine the need for alignment shifts. Several adjustments of the rough line and grade may be necessary before a reasonably good initial line complies with the design speed requirements.

4. Horizontal Alignment. Horizontal alignment is a combination of circular curves, transition curves, and tangents. Horizontal alignment must provide for safe and continuous operation at a uniform design speed for substantial lengths of highway.

The major design considerations in horizontal alignment are safety, functional classification, design speed, topography, vertical alignment, construction cost, cultural development, and aesthetics. These factors, when properly balanced, produce an alignment that is safe, economical, and in harmony with the natural contour of the land.

The following guidelines apply to all alignment projections:

- The line should be as directional as possible, consistent with topography and land use. A flowing line following the natural contours is preferable to one with long tangents slashing through the terrain and causing large construction scars.

- If possible, avoid the use of the minimum radius for the design speed.

- Consistent alignment is the desirable end product. Sharp curves introduced at the ends of long tangents, and sudden changes from flat curvature to sharp curvature are dangerous. When sharp curvature is used, successively sharper transition curves from flat curvature to sharp curvature are applicable. This is necessary since actual operating speeds typically exceed design speeds on long flat curves (radius>450 m) and tangents. The designer may assume 85th percentile operating speeds of 100 km/h approaching curves following tangents or flat curves longer than 500 meters.

- On long high through-fills, use only very flat curvature unless guardrail or other measures such as plantings or reflectors are used to delineate the edge of the roadway.

- Small deflection angles should have long curves to avoid the appearance of a kink. On alignments with long tangents and sight distances, the curve should be at least 150 meters in length for a delta (central angle) of 5°. This minimum length increases 30 meters for each 1^{O} decrease in delta. For curves located on a crest vertical curve, decreasing the above lengths will still provide a pleasing transition.

  Deflections of 15 minutes and less do not require the use of a curve, but it is preferable to locate slight breaks in grade at these angle points to minimize the visible effect to the road user.

  For aesthetic reasons and driving comfort, the preferable minimum length of curve should be between 1.5 to 3 times the design speed.

- Avoid abrupt reversals in alignment by providing enough room between curves for superelevation runoff or for spirals. See Section 9.4.A.4.d on transition curves and Figure 9-3 for instructions on locating the flat section between reversing curves with short intervening tangents.

- Broken-back curves (adjacent curves in the same direction with short intervening tangents) violate drivers' expectations. Drivers expect a curve in the opposite direction of the one they just negotiated. When broken-back curves are visible for some distance ahead, they present an unpleasing appearance, even with tangents as long as 400 meters. It is desirable to introduce a reverse curve between them to eliminate the broken-back effect. In some cases a single long curve or compound curve may replace the broken-back curve.

- Use compound curves cautiously because they can surprise the driver. They may be needed to eliminate excessive cuts or fills, encroachments into rivers, or broken-back curves, but avoid their use on open highway alignment. A single curve with minimal additional impact is always preferable to a compound curve.

  Since neither compound or broken-back curves are desirable, it is up to the designer's experience and judgment to determine which to use in an unavoidable situation.

- When compounding curves, the radius of the flatter curve should not be more than 1.5 times that of the sharper curve. If this is impractical, design a partial spiral or a curve of intermediate radius between the main curves. The rate of change of a partial connecting spiral should be equal to or less than the average of the normal spirals used on the curves. Intermediate connecting curves should have a length not less than the runoff length for the flatter main curve as obtained from the superelevation runoff tables (Green Book, pages 167 to 171).

  The arc length of the main curves of any compound curve should be a minimum of 1.5 times the design speed. This provides about 5 seconds of driving time on each curve.

- A single design speed should normally apply for the full length of the compound curve. This requires different superelevation rates, which must be transitioned from one rate to the other over the full length of the partial spiral or the full length of the connecting curve. If neither a partial spiral nor intermediate curve is used, the superelevation transition should take place over a minimum length of 30 meters. Half the transition length should be on each curve.

  After the alignment fits the controls of the highway location, reduce it to circular curves, transition spirals when required, and connecting tangents.

a. Circular Curves. When splines or freehand methods are used to determine the preliminary alignment, the following procedure will approximate the radius of circular curve.

- Select segments of the preliminary line which are uniform in curvature. Measure the long chord (C) and middle ordinate (M) of each alignment segment of uniform curvature.

- Determine the radius (R) of the circular curve using the equation:

$$R = \frac{M}{2} + \frac{C^2}{8M}$$

Select the curve closest to the calculated value.

b. Transition (Spiral) Curves. A transition curve allows for a gradual change in radius from infinity on the tangent to that of the circular curve so centrifugal force also develops gradually. Longer transition lengths can improve the aesthetic quality of the alignment. Spirals improve the appearance of a highway, reduce the lateral drift of vehicles entering curves, and simplify transitioning of superelevation at the ends of curves. It is FLHO policy to encourage the use of spirals for smoother transitions.

The minimum length of the spiral used to connect a circular curve to a tangent shall be the length required for superelevation runoff. A discussion on transition spirals begins on page 174 in the Green Book. The minimum superelevation runoff lengths are provided in Tables III-7 to III- 12 on pages 167 to 171 in the Green Book. The designer should be aware that many States have adopted transition lengths greater than the minimum AASHTO requirements so State criteria applies in these cases. It should also be noted that some States prefer not to use spiral curves.

c. Superelevation. The highway designer must consider design speed, maximum curvature, and superelevation in horizontal alignment design. These design elements are related by the laws of mechanics and involve friction factors, centrifugal force, gravity, etc.

Design speed is based on the terrain, traffic, and functional classification of the highway. Maximum superelevation considers the design speed and climatic conditions. Maximum curvature is a function of design speed and maximum superelevation. Pages 151 to 153 in the Green Book provides guidance on selection of maximum superelevation rates. Where spirals are used, the superelevation runoff is applied uniformly over the full length of the spiral.

Superelevation is not necessary on flat curves because the centrifugal force developed by vehicles even at high speeds is minimal. Design these curves using a normal tangent crown section. See page 166 in the Green Book for a discussion on the sharpest curve without superelevation.

On RRR projects, provide proper superelevation and transitions. When standard superelevation rates are impractical, the highest achievable rate applies, subject to approval through the design exception process. Where exceptions are necessary, speed studies should identify locations for speed and warning sign installations.

In addition to improving superelevation, consider flattening curves when accident data indicates that geometrics are a contributing factor.

Within the constraints imposed by adjacent development (curbs, sidewalks, and arterial streets) urban highways should be superelevated the same as rural highways.

d. Transition Sections. Tangent sections of roadways carry normal crown. Curved sections are superelevated. Transitions make a gradual change from one to the other. Superelevation runoff is the length of roadway used to transition from full superelevation on a curve to a flat section on the outside lane(s) on the adjoining tangent. Tangent runoff is the length of tangent required to transition from the above flat section to full crown. In IHDS, the tangent runoff distance is user defined. Under normal conditions the distance should match the rate of superelevation. A detailed discussion of runoff begins on page 175 in the Green Book.

Where the alignment consists of tangents connected by circular curves, generally the superelevation begins on tangent, and full superelevation is attained some distance into the curve.

Design practice is to place about two-thirds of the runoff on the tangent approach and one-third on the curve. With a short tangent distance between reversing curves, the runoff length may require up to one-half of the length on the curve and one-half on the tangent.

Give special attention to superelevation transition for broken-back curves. Figures 9-1 and 9-2 give guidance in providing an adequate transition between curves in a broken-back situation.

Figure 9-3 shows a method of checking templates for flat sections between reversing curves with a short tangent.

Many vehicles operate at speeds higher than the design speed on long tangents and flatter curves. These vehicles have to slow to the design speed in order to safely negotiate the sharpest curves. In areas of sharp curves, the radius and the superelevation of adjacent curves should limit the difference in design speed between the curves to a maximum of 20 km/h. If the maximum differential is exceeded, the plans shall include advance curve and advisory speed signs for the lower speed curves.

A method for determining superelevation rates for significant changes in curvature is detailed in the example in Table 9-3.

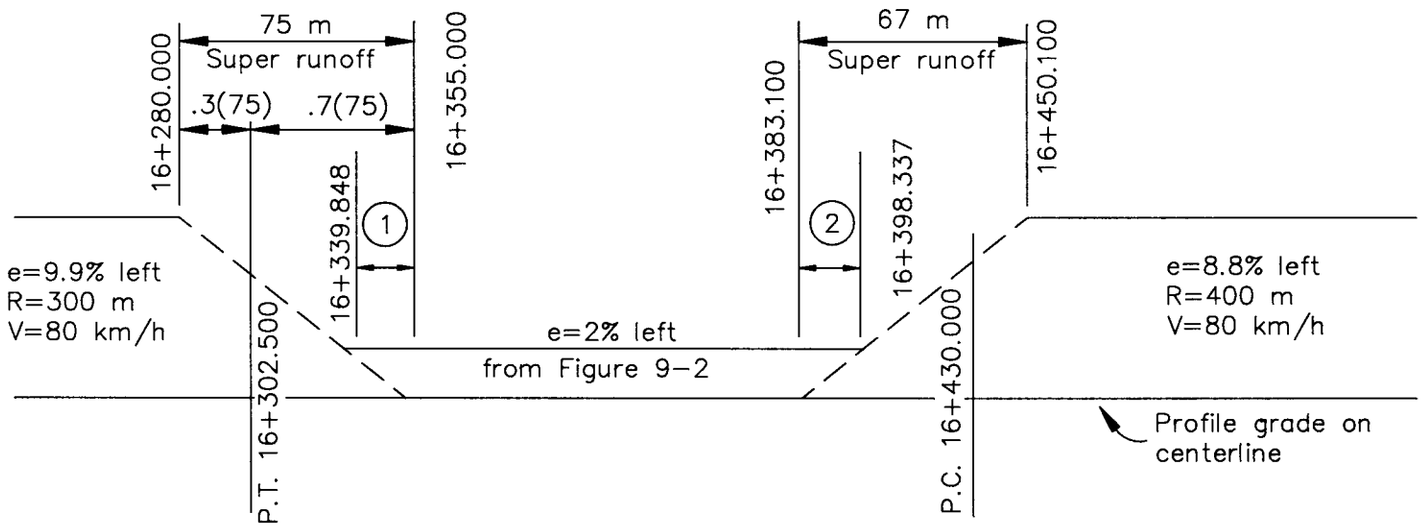

Example:

Tangent distance P.T. to P.C. 16+430.000–16+302.500=127.500 m
Transition super rate from Figure 9.2 for
80 km/h and 127.500 m tangent=2%

(1) $\frac{.020}{.099}(75)=15.152$ m

Imaginary curve station = 16+355.000 – 15.152 = 16+339.848

(2) $\frac{.020}{.088}(67)=15.227$ m

Imaginary curve station = 16+383.100 + 15.227 = 16+398.337

Figure 9-1 Superelevtion Transition on Short Tangents Between Broken-Back Curves

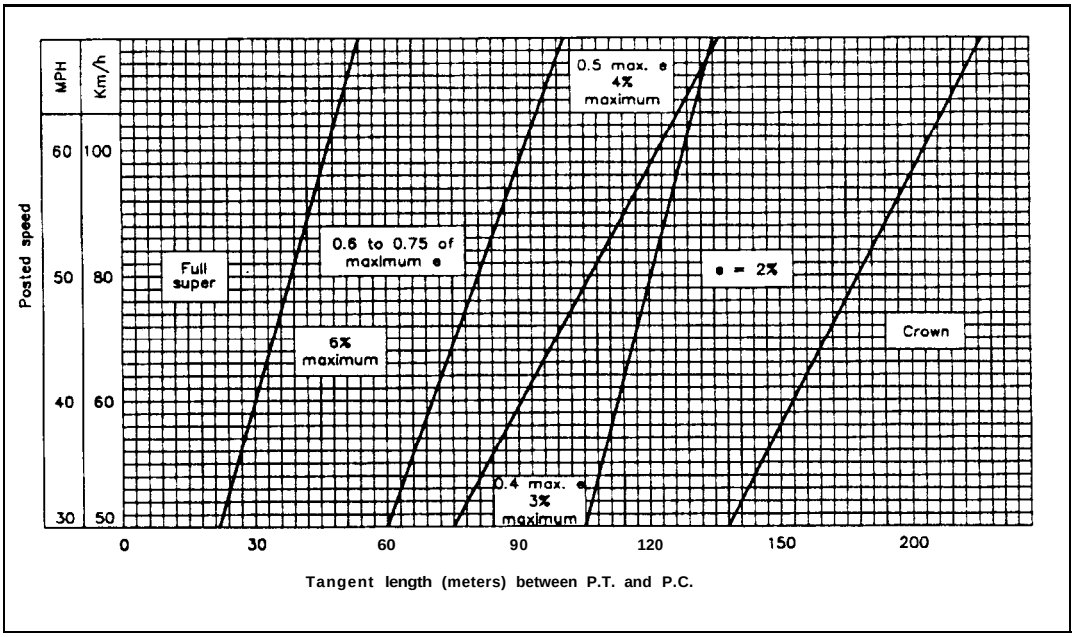

Figure 9-2
Superelevation Transitions for Broken-Back Curves

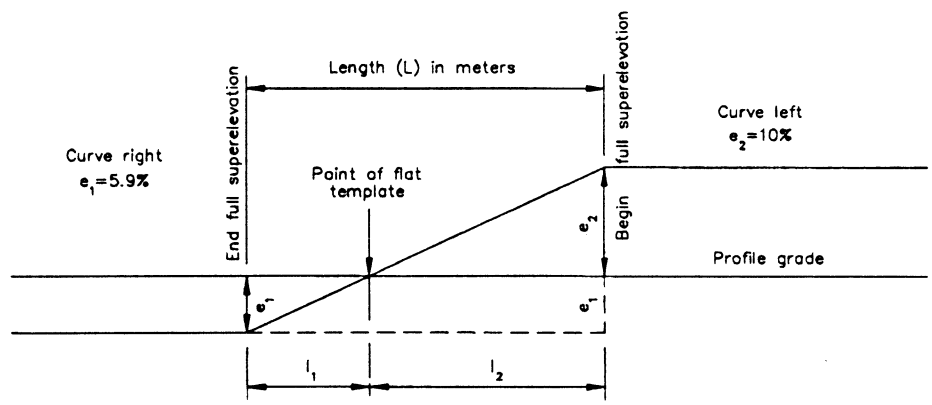

Note:

Ratio $\frac{l_1}{L} = \frac{e_1}{e_1+e_2}$ Or $\frac{l_2}{L} = \frac{e_2}{e_1+e_2}$

Therefore $l_1 = \frac{(e_1)(L)}{(e_1+e_2)}$ Or $l_2 = \frac{(e_2)(L)}{(e_1+e_2)}$

Figure 9-3
Determining Flat Sections Between Reversing Curves with Short Tangents

Example: A 20 km/h maximum differential in design speed is allowed between adjacent curves and between a curve and a long tangent. For a maximum radius curve with a 50 km/h design speed, flatter curves on either side could be superelevated for a 60 km/h design speed. A curve at the end of a long tangent with an expected operating speed of 100 km/h would be superelevated for a 80 km/h design speed. Tangents over 120 meters in length are considered long tangents.

Table 9-3 is an example of how to record design speeds for a project.

The following is a list of the sample design data entered into the table.

Given:

Basic design speed = 60 km/h.
e_{max} = 8%
Road alignment =
190 m tangent, 600 m radius curve right,
98 m tangent, 300 m radius curve left,
84 m tangent, 200 m radius curve right,
73 m tangent, 150 m radius curve left,
80 m tangent, 300 m radius curve right,
93 m tangent, 900 m radius curve left,
97 m tangent.

Table 9-3
Example Listing of a Determination of Superelevation Rates

Tangent / Curve Left/Right (meters)/(radius)	Safe Speed e_{max} 8% (km/h)	Adjusted Design Speed (km/h)	"e" for Adj. Design Speed (percent)	Run Off Length (meters)
	100	100		
190 m Tangent				
600 m Radius Curve Right	120	100	6.9	56
98 m Tangent				
300 m Radius Curve Left	90	80	7.6	55
84 m Tangent				
200 m Radius Curve Right	75	70	7.9	52
73 m Tangent				
150 m Radius Curve Left	67	60	7.8	47
80 m Tangent				
300 m Radius Curve Right	90	80	7.6	55
93 m Tangent				
900 m Radius Curve Left	145	100	5.2	56
97 m Tangent				

NOTE: Enter tangent length in meters and the curve radii in the first column. From Figure III-10 through Figure III-14,Design Superelevation Rates in the 1994 “Green Book”, determine the maximum safe speed at a superelevation rate of 8% for each curve and record in column 2. Now adjust each curves design speed for the maximum 20 km/h differential between curves. Start with the sharpest curve (the 150 and 200 m radius curves) and continue by increasing the design speeds accordingly on the adjacent curves. Leaving a long tangent, the process is reversed. Start with an estimated driving speed for the tangent and reduce the speed by 20 km/h for the adjacent curve. Record the runoff or spiral length actually used in the last column. These are helpful for future checking. Include the analysis in the design study.

If design speeds of horizontal curves are increased, the vertical curvature must meet the standards for these increased speeds. Where there is not enough runoff length between curves, redesign them to provide the runoff length or lower the design speed for one or both curves.

5. Vertical Alignment. Vertical alignment consists of a series of gradients connected by vertical curves. Applicable design controls include safety, topography, functional classification, design speed, horizontal alignment, construction cost, cultural development, drainage, vehicular characteristics, and aesthetics. The terms *vertical alignment, profile grade* and *grade line* are interchangeable.

The topography of the land has an influence on alignment. AASHTO separates topography into three classifications of terrain:

(1) Level or flat
(2) Rolling
(3) Mountainous

A description of these three types of terrain begins on page 226 in the Green Book.

Terrain classifications pertain to the general character of a specific route corridor. For example, routes in mountain valleys and mountain passes that have all the characteristics of level or rolling terrain should be classified as such. The terrain classification determines the maximum allowable grades in relation to design speed.

a. Vertical Alignment (Grade). Once the horizontal line is in the Interactive Highway Design System (IHDS), the designer should obtain a plot of the ground line and establish the vertical control points. Project the profile grade to fit these control points and the standards for percent of grade and vertical curve length. To produce a desirable vertical alignment, the designer should use the following guidelines:

- Use a smooth grade line with gradual changes, consistent with the type of highway and character of terrain. Avoid numerous breaks and short grade lengths.

- Avoid hidden dips. Hidden dips are hazardous on two-lane highways. They can hide approaching or slow moving vehicles or obstructions on the road ahead while deceiving the driver into believing that it is safe to pass or travel at high speed. Use long straight grades or introduce horizontal curves in conjunction with vertical curves to break up unsafe long tangents.

- Long steep grades affect traffic operation. If traffic volume is high, a slow moving vehicle lane or turnout requires study. On long downgrades, consider a truck escape ramp.

On some steep grades, especially on low speed roads, it is desirable to break a sustained grade by making it steeper at the bottom and flatter at the top. Short intervals of flatter grade permit high-powered vehicles to accelerate and pass underpowered vehicles.

- On switch-back curves, flatten the grade to compensate for slower speeds.

- Avoid broken-back grade lines. Two vertical curves in the same direction separated by short tangents is poor design practice particularly in sags where both curves are visible at the same time.

- Sag vertical curves at the ends of long tangents should be several times the length required for stopping sight distance to avoid the appearance of an abrupt change in grade.

- When at-grade intersections occur on roadways with moderate to steep grades, it is desirable to reduce the grade through the intersection.

- In swampy terrain and areas subject to overflow and irrigation, the low point of the subgrade should be at least 0.5 meters above the expected high water. For roads located along main streams and rivers, refer to Chapter 7 for the appropriate hydraulic controls.

b. Maximum Grade. The designer should know the functional classification of the project from the planning and programming process (see Chapter 2). Consider this data, pages 227-241 of the Green Book, and the type of topography to determine the maximum allowable grades in relation to design speed.

Example:

- Rural Area.
- Highway Functional Classification is Rural Collector.
- 60 km/h Design Speed.
- Rolling Terrain.

According to the Green Book (Table VI-3, maximum grades, page 463), the maximum grade for this example is 8 percent.

When analyzing maximum grades, note that superelevation transitions will increase the effective grade on the edge of the traveled way. This increase is significant particularly to trucks and recreational vehicles. To minimize this effect on long continuous runs of near maximum grades, the designer has two options:

(1) Flatten the grade throughout the curve.

(2) Carry profile grade on the right edge of the traveled way going upgrade.

This is especially important when the design contains climbing lanes or scenic pulloffs.

c. Minimum Grade. Flat and level grades on uncurbed pavements are not objectionable when the pavement is adequately crowned to drain the surface laterally.

A flat grade (0.00 percent) is acceptable in through-fill sections where the highway has sufficient crown. Minimum grades (0.5 percent) are applicable only for drainage of roadway ditches in cut sections, drainage of curb sections, and to ensure pavement drainage on superelevation transitions. This requirement particularly applies where flat grades on crest and sag verticals have substantial lengths that are essentially flat. It also applies where superelevation transitions introduce sags in the ditch or gutter line. Computer plots of the ditch or gutter profiles will highlight any drainage problems for correction as the design progresses.

See Section 9.4.A.7, Geometric Cross Section, for details on design of drainage.

d. Vertical Curves. Vertical curves provide a gradual change between tangent grades. (See Figure III-38 on page 281 in the Green Book.) For simplicity, the parabolic curve with an equivalent vertical axis centered on the vertical point of intersection (VPI) is common in roadway profile design. On certain occasions, critical clearance or other controls require the use of unsymmetrical vertical curves. Either situation is easily handled in IHDS.

Figure 9-7 shows a method of determining the low point on a vertical curve when the grades are unequal. This will identify locations for the installation of pipe culverts, catch basins, or other such drainage facilities.

Figure 9-8 shows a way to eliminate a series of broken-back curves.

e. Critical Lengths of Grade. Maximum grade, in itself, is not a complete design control. The length of a particular grade in relation to desirable vehicle operation requires analysis. The critical length of grade is the maximum length of a designated upgrade on which a loaded truck can operate without an unreasonable reduction in speed. Studies show that regardless of the average speed on the highway, the greater a vehicle deviates from this average speed, the greater its chances of becoming involved in an accident. A 15 km/h reduction in truck speed determines critical lengths of grade. The Green Book has a discussion on this subject and recommendations for different conditions starting on page 234.

6. Sight Distance. Sight distance is the continuous length of roadway ahead that is visible to the driver. Of prime importance is the arrangement of geometric elements so that adequate sight distance exists for safe and efficient operation.

On horizontal curves the sight distance available depends on the radius of the curve and the location of obstacles to the line of sight across the inside of the curves. Obstacles such as cut slopes, tall grass on cut slopes, trees and shrubs, farm crops, buildings, bridge abutments and walls, bridge railing, and guardrail may limit the sight distance. To provide for safe operation, horizontal sight distance must equal or exceed the safe stopping distance for the selected design speed. These distances are listed on page 120, Table III-1 in the Green Book. To obtain the required sight distance, the designer may flatten curves or provide for the removal or relocation of obstacles.

Crest vertical curves may also limit the horizontal sight distance, especially in cut sections. The designer must take this into consideration when crest vertical curves coincide with horizontal curves and there is a substantial change in grade. This case may require a longer vertical curve, flatter horizontal curve, wider and deeper ditch, additional clear area beyond the ditch or shoulder, or a combination of these.

Three sight distances are considered in design:

- Stopping Sight Distance (SSD).
- Decision Sight Distance (DSD).
- Passing Sight Distance (PSD).

Minimum stopping sight and passing sight distances directly relate to the design speed of the road.

Sight distances for at-grade intersections, including railroad crossings and private road approaches, are a separate topic covered under Intersections at Grade, Section 9.4.C.

a. Stopping Sight Distance. A roadway design requires minimum stopping sight distance at all points, and where economically justified more liberal stopping distances are desirable.

Minimum stopping distance is the least distance required to bring a vehicle to a stop under prevailing vehicle and climatic conditions. It depends on the initial speed of the vehicle, the perception and reaction time of the driver, and the coefficient of friction between tires and roadway for the prevailing conditions. The coefficient of friction is much lower for wet pavements; therefore, wet rather than dry pavement conditions apply for establishing minimum values.

Design controls for SSD are in the Green book, pages 117 to 125, 219, 223, and 283 to 293. Also see Tables 9-4 and 9-5 in this chapter.

b. Decision Sight Distance. Decision sight distance is the length of road a driver needs to receive and interpret information, select an appropriate speed and path, and begin and complete an action in a safe maneuver. This distance is greater than the distance needed to simply bring a vehicle to a stop, and provides for a reasonable continuity of traffic flow.

If possible, provide decision sight distance in advance of any feature requiring increased driver awareness and action. This includes intersections, lane changes, congested areas, pedestrian crossings, or other features. When decision sight distance is unavailable and relocation of the feature is not possible, the designer shall provide suitable traffic control devices.

See design controls for DSD in the Green Book, pages 126 to 127. Also see Table 9-4 in this Chapter.

c. Passing Sight Distance. Passing sight distance is generally applicable only to two lane, two-way roads. It is important for reasons of safety and service to provide as many passing opportunities as possible in each section of road. The designer should try to ensure there are no long sections where passing is not possible. The available passing sight distance has considerable influence on the average speed of traffic, particularly when a road is operating near capacity.

The economic effects of reduced speed are indeterminate, but there is no doubt that road users benefit considerably when operating at or near design speeds with minimal traffic interference. The designer should consider these economic effects when setting horizontal and vertical alignments.

Passing sight distance seldom applies on multilane roads. However, passing sight distance at the end of truck-climbing and passing lanes where traffic must merge requires consideration.

The designer should increase the sight distance in areas where vehicles operate above the design speed.

Standard minimum passing distances for all classes of two-lane roads are given in the Green Book, pages 128 to 136.

Design minimum passing sight distance requirements should not be confused with values provided in the MUTCD for determining no-passing zone pavement striping (MUTCD 3B-5).

Table 9-4
Sight Distance Standards[1]

Design Speed km/h	Assumed Speed km/h	Sight Distance (meters)				
		Stopping (SSD)		Decision (DSD)		Passing (PSD)
		Minimum	Desirable	Maneuver C	Maneuver E	Minimum[2]
30	30-30	29.6	29.6			217
40	40-40	44.4	44.4			285
50	47-50	57.4	62.8	145	200	345
60	55-60	74.3	84.6	175	235	407
70	63-70	94.1	110.8	200	275	482
80	70-80	112.8	139.4	230	315	541
90	77-90	131.2	168.7	275	360	605
100	85-100	157.0	205.0	315	405	670
110	91-110	179.5	246.4	335	435	728
120	98-120	202.9	285.6	375	470	792

NOTE:
[1]Based on passenger cars operating on wet pavement on grades <3%. For grades ≥3%, the values for SSD should be adjusted to the lengths shown in Table 9-5. Because truck and bus drivers are higher above the highway surface than car drivers and can see the road further ahead, the values in the table are considered adequate for trucks and buses.

[2]The PSD values shown are minimum to allow one vehicle to pass and are based on a speed differential of 15 km/h between the passing and passed vehicle. Longer lengths are desirable to allow more vehicles to pass.

Table 9-5
Effect of Grade on Stopping Sight Distance

Design Speed (km/h)	Stopping Sight Distance (m) for Downgrades:			Assumed Speed for Condition (km/h)	Stopping Sight Distance (m) for Upgrades:		
	3%	**6%**	**9%**		**3%**	**6%**	**9%**
30	30.4	31.2	32.2	30	29.0	28.5	28.0
40	45.7	47.5	49.5	40	43.2	42.1	41.2
50	65.5	68.6	72.6	47	55.5	53.8	52.4
60	88.9	94.2	100.8	55	71.3	68.7	66.6
70	117.5	125.8	136.3	63	89.7	85.9	82.8
80	148.8	160.5	175.5	70	107.1	102.2	98.1
90	180.6	195.4	214.4	77	124.2	118.8	113.4
100	220.8	240.6	256.9	85	147.9	140.3	133.9
110	267.0	292.9	327.1	91	168.4	159.1	151.3
120	310.1	341.0	381.7	98	190.0	179.2	170.2

d. Restrictions. Sight distance on horizontal curves is proportional to the radius of the curve. Manmade objects or naturally occurring conditions can restrict the line of sight across the inside of a curve. Typically, vegetation or a cut slope restricts sight distance.

Provide adequate sight distance on horizontal curves by selecting the proper curve radius and arranging for the removal or relocation of obstacles.

Stopping sight distance (SSD) for the design speed of the highway must be provided on all horizontal curves as a minimum. The SSD is measured from the eye height of a passenger car driver, 1070 millimeters above the center of the inside lane, to an object 150 millimeters high on the center of the inside lane on the highway ahead. If the grade and superelevation are uniform throughout the SSD, then the midpoint on the line of sight is (1070+150)/2 = 610 millimeters above the center of the inside lane. This dimension determines the offset (M) on a cut slope at the midpoint of the SSD. See Figure 9-5.

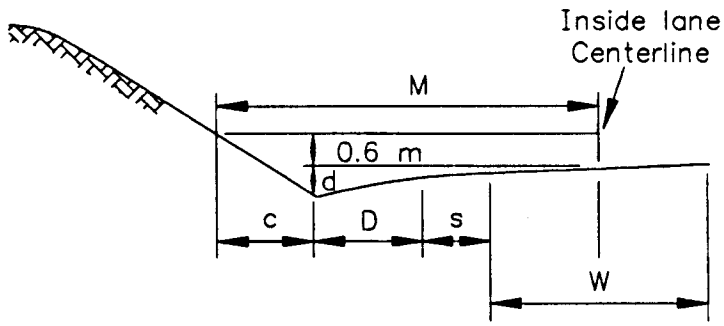

Offset (M) = c + D + s + 0.5W

Where:

c= the drop (d) from the center of the inside lane to the bottom of the ditch plus 0.6 meter multiplied by the cut slope ratio.

D= the total ditch width from bottom of ditch to edge of shoulder.

s= the shoulder width

W= width of the inside lane

Note: When vegetation is expected to grow on the cut slope, the drop (d) should be reduced by the estimated depth of the vegetation. On crest vertical curves, (d) should be reduced appropriately. On sag vertical curves, (d) should be increased.

When vegetation is not controlled on the cut slope, reduce the c distance to zero.

Figure 9-5 Lateral Clearance for Stopping Sight Distance

Checking the computed offset (M) against Figure 9-6A or 9-6B will determine if the design provides adequate SSD for the design speed and the radius of curve. The designer must provide at least the minimum SSD or reduce the design speed for a portion of the highway. When reduced speeds are used, permanent advance warning signs are mandatory.

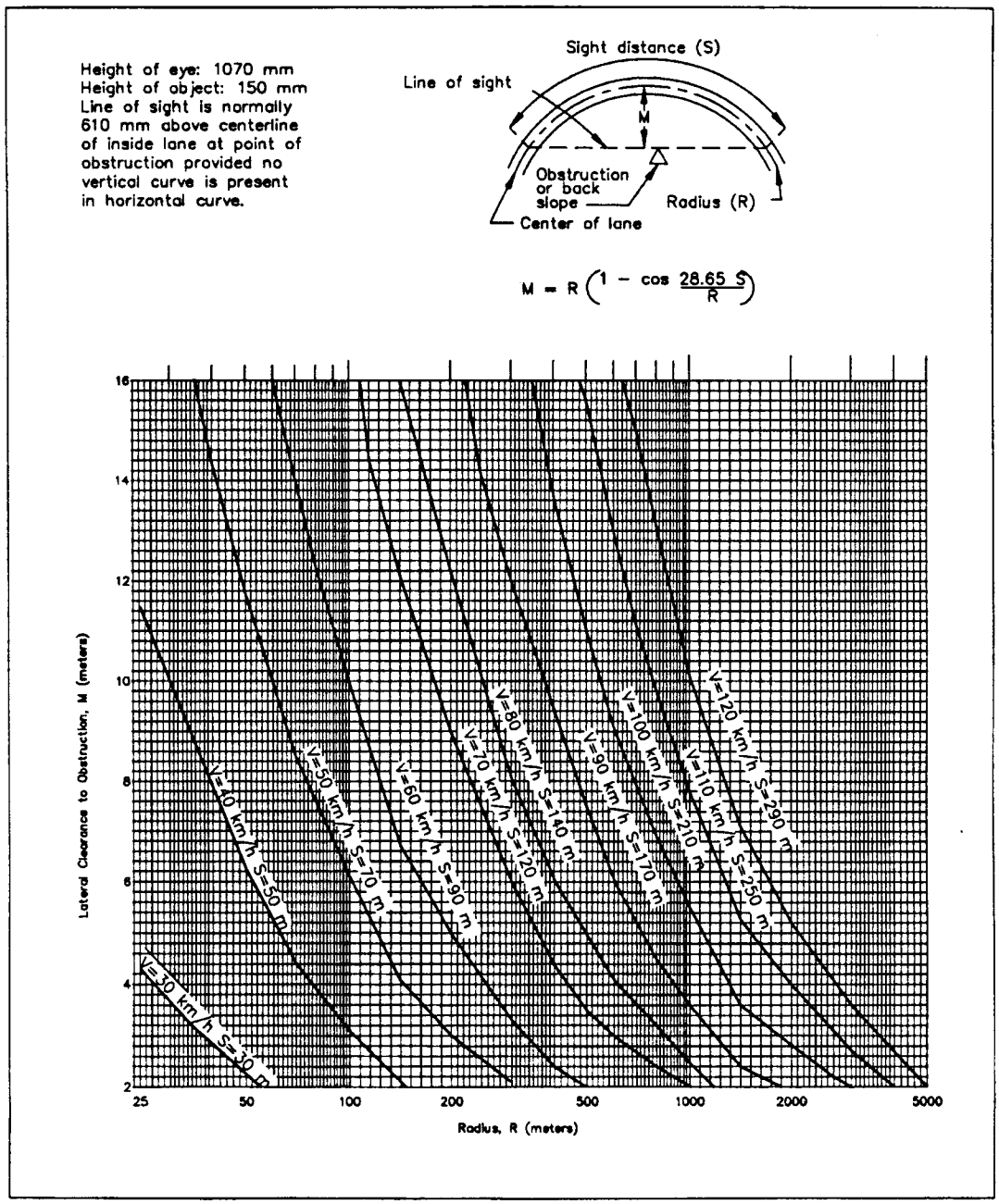

Figure 9-6A
Desirable Horizontal Stopping Sight Distance

Height of eye: 1070 mm
Height of object: 150 mm
Line of sight is normally 610 mm above centerline of inside lane at point of obstruction provided no vertical curve is present in horizontal curve.

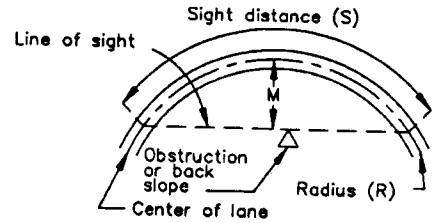

$$M = R\left(1 - \cos\frac{28.65\ S}{R}\right)$$

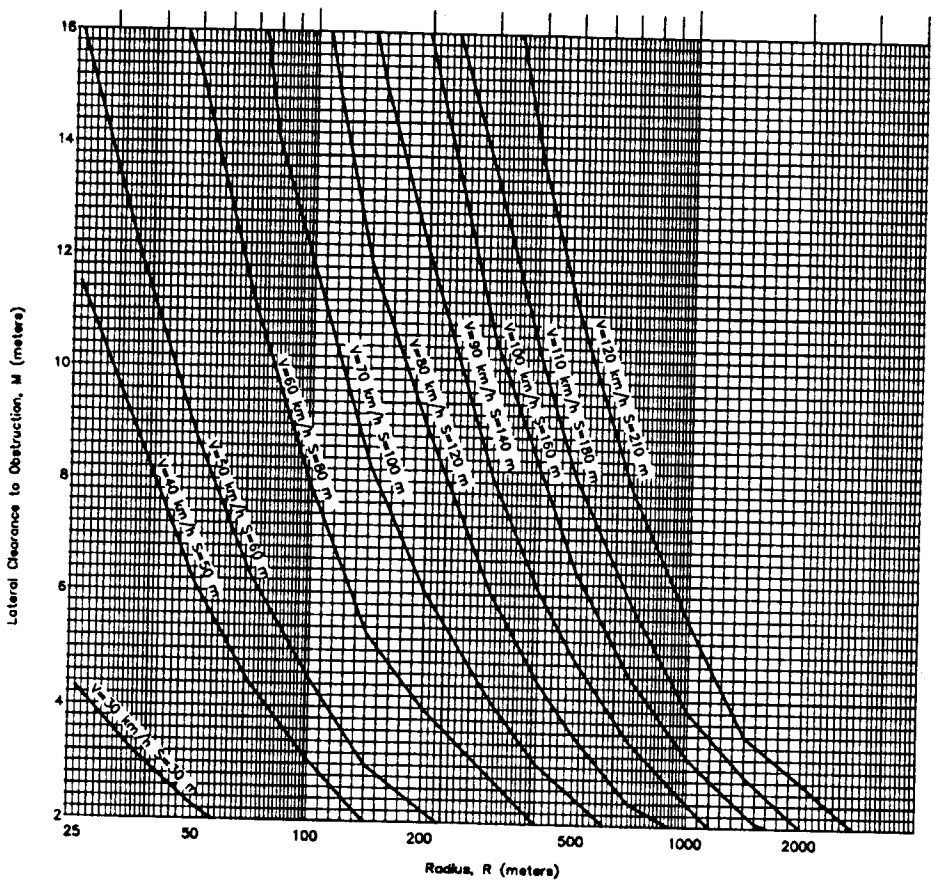

Figure 9-6B
Minimum Horizontal Stopping Sight Distance

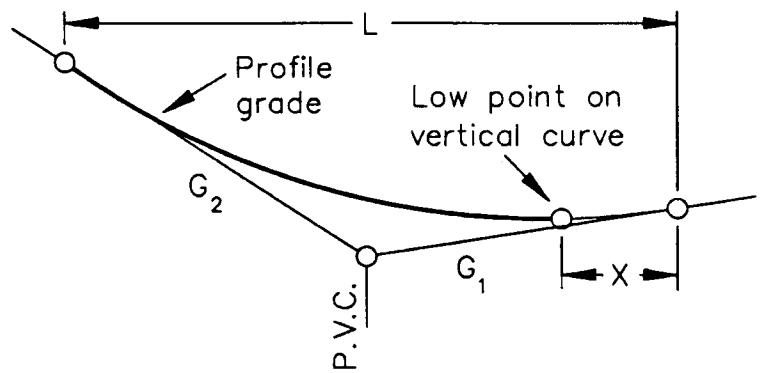

Where:

G_2=Steeper grade in percent

G_1=Flatter grade in percent

L=Length of vertical curve in meters

$$X = \frac{G_1(L)}{G_2+G_1}$$

Distance in meters from end of vertical curve of flatter grade to low point on vertical curve.

Example:

Let G_2=4% and G_1=2%

L=300 meters

$$\text{therefore } X = \frac{(+2)\ (300)}{4 + 2} = \frac{600}{6} = 100 \text{ m}$$

Figure 9-7 Determining Low Points on Vertical Curves With Unequal Grades

The minimum lengths of vertical curves used in design are determined by the following formula:

$$L = AK$$

Where:

L = Minimum length of vertical curve in meters. (Round up to even tens, fifties, or hundreds.)

A = Algebraic difference in grade in percent.

K = Rate of change of grade (a constant value for a particular design speed and type of sight distance). Obtain value from Table 9-6.

NOTE: For small changes in grade (A) or for small values of (K), the computed lengths of vertical curves may be very short. For these conditions, use the minimum lengths specified in Table 9-6 instead of the calculated length, provided it is longer. When practical, it is desirable to design vertical curves of 150 meters or more in length, in order to create a pleasing appearance.

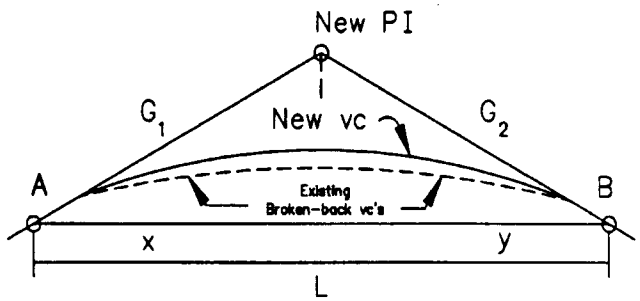

VC=vertical curve

To determine the station and elevation of a new PI by extending existing grades to intersection:

1. Select a random even station for point A and determine the elevation for it from the old grade PI. Elevation of Point B=Elevation of Point A.

2. Determine the station of Point B from the old grade PI.

3. Distance L equals difference in stations between A and B in meters:

   G_1=Ascending grade in percent

   G_2=Descending grade in percent

$$x = \frac{G_2 L}{G_1 + G_2}$$

$$y = L - x$$

$$\text{Elevation of new PI} = \text{Elevation point A} + \frac{G_1 x}{100}$$

$$= \text{Elevation point B} + \frac{G_2 y}{100}$$

Figure 9-8 Eliminating Broken-Back Vertical Curves

Table 9-6
(K) Values for Determining Lengths of Vertical Curves

Design Speed km/h	Crest Vertical Curves					Sag Vertical Curves		Minimum Lengths of Crest or Sag Vertical Curves (m)
	Based On Stopping Sight Distance		Based On Decision Sight Distance		Based On Passing Sight Distance	Based On Stopping Sight Distance		
	K Minimum	K Desirable	K Minimum	K Desirable	K Minimum	K Minimum	K Desirable	
30	3	3			50	4	4	18
40	5	5			90	8	8	24
50	9	10	52	99	130	11	12	30
60	14	18	76	137	180	15	18	36
70	22	31	99	187	250	20	25	42
80	32	49	131	246	310	25	32	48
90	43	71	187	321	390	30	40	56
100	62	105	246	406	480	37	51	60
110	80	151	277	468	570	43	62	66
120	102	202	348	547	670	50	73	72

Note: The minimum PSD shown in Table 9-6 is significantly less than shown in Table 9-4. The PSD in Table 9-4 assumes the passed vehicle is operating at or near the design speed. The distances in Table 9-6 allow opportunities to pass slower moving vehicles.

7. Geometric Cross Section. The highway cross section is defined as the finished or the proposed finished section between construction limits. (See Figure 9-9.)

Roadway section configurations depend on functional classification criteria. The criteria show the cross-section characteristics of the roadway section based on the Green Book, State developed and approved classifications, NPS standards, or other applicable agency standards.

Most Federal roads have an asphalt concrete surface. Some highways are graded under several contracts and the ultimate pavement is placed when a long section of the route is ready. Under the grading contracts, the base courses may be placed and then surfaced with an interim asphalt surface treatment. Occasionally, a roadway with gravel surfacing is requested by the client agency.

a. Pavement Structure. The pavement structure refers to the material and depth of base and pavement placed on the finished subgrade. The pavement structure design should use the minimum depth of material necessary to carry the projected loads over the design life of the pavement. The design shall also provide for a smooth-riding, skid-resistant surface.

A normal pavement structure design has a 10 to 20-year life. The geotechnical staff bases the design on soil samples and the predicted volume and type of traffic using the highway during the design life. The pavement structure thickness varies with climatic conditions and the type and strength of subgrade material used (usually in the top 300 to 600 millimeters of subgrade).

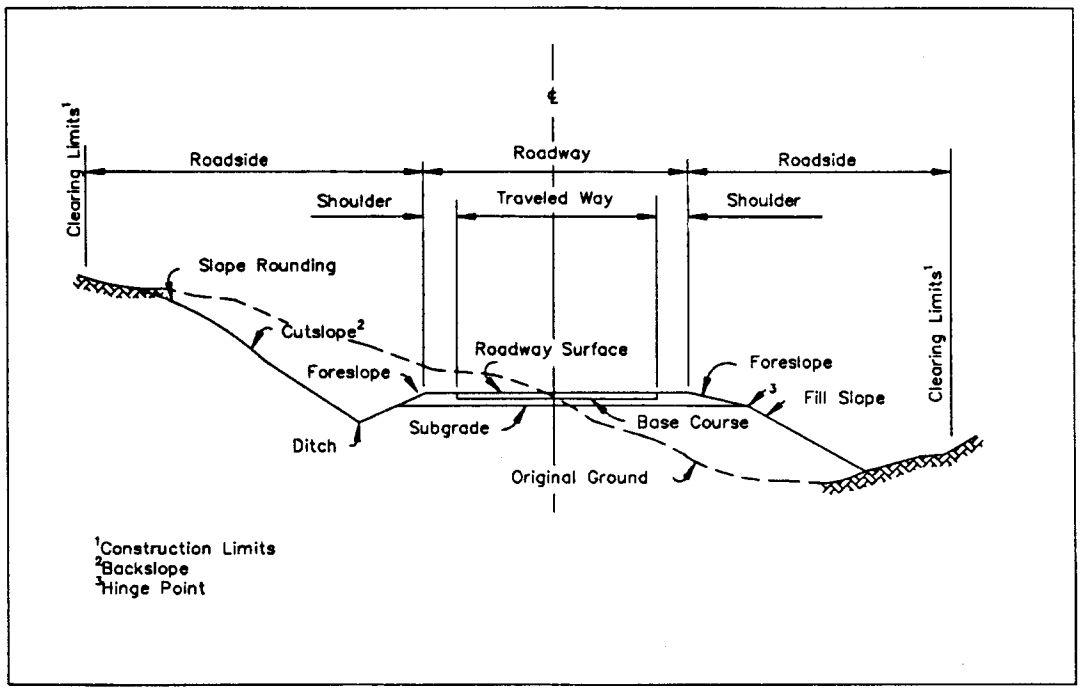

Figure 9-9
Typical Road Cross Section Elements

At the beginning of a design, the depth of the pavement structure may be arrived at by an assumption based on experience or by comparing with the depths used on an adjacent project. Following a geotechnical investigation, the designer will adjust the assumed depth accordingly. The geotechnical investigation usually takes place after a line and grade have been established.

For RRR projects, the riding quality of an asphalt surface may be improved by providing a leveling course. This additional depth may increase the pavement structure capabilities and merits consideration in the final pavement design when leveling is relatively uniform over the length of the project. If a field review of the project is not practical, the designer should increase asphalt concrete pavement quantities by 20 percent for use as leveling material. See Chapter 6 for additional details on the design of asphalt and concrete pavements.

b. Profile Grade Location and Cross Slope. The standard location of profile grade on the highway cross section is at centerline or low side of the superelevated section for all two-lane highways.

The cross slope on tangents on paved highways shall be from 1.5 to 2.0 percent.

Normally, the cross slopes on gravel surfaced roads shall be 3 to 4 percent.

The shoulder cross slope should be the same as the adjacent traffic lane. With curb sections or when the shoulder surface is an asphalt surface treatment, aggregate, or turf, increasing the slope helps to facilitate drainage. In these cases, consider cross slopes of 4 to 6 percent. On super elevated curves, the roll-over in cross slope on the outside of the curve should not exceed 8 percent.

The cross slope on the tops of base courses and the subgrade is usually the same as on the finished pavement. In some cases it is desirable to have a reverse slope on the subgrade (on the high side of curves and outside the edge of the pavement) to prevent moisture from entering the base.

c. Lane and Shoulder Widths. The Green Book and other agency standards show lane and shoulder widths for each functional classification for various design speeds and traffic volume ranges.

When the percentage of trucks or recreational vehicles is high in comparison to the ADT, consider increasing lane widths.

d. Foreslopes. Foreslopes ensure the stability of the roadway and provide a reasonable opportunity for recovery of an out-of-control vehicle. The foreslope, the slope from the edge of the surfaced shoulder to the edge of the subgrade shoulder, should not be steeper than the slope ratios shown in Table 9-7, unless guardrail is placed (Detail designs should be in accordance with the *Roadside Design Guide*, AASHTO, 1996).

The slope from the edge of the subgrade shoulder to the bottom of the ditch should normally be an extension of the foreslope.

Table 9-7
Foreslope Ratios

Guidelines for Foreslopes Including Ditch Sections

Design Volume (ADT)		Design Speed (km/h) 30	40	50	60	70	80	90	100	110
Less than 250		1:3*	1:3*	1:3*	1:3*	1:3*	1:3*	1:4	1:4	1:5
250 to 500		1:3*	1:3*	1:3*	1:3*	1:4	1:4	1:4	1:4	1:5
501 to 1000		1:3*	1:3*	1:3*	1:3*	1:4	1:4	1:5	1:5	1:5
1001 to 3000	1:3*	1:3*	1:3*	1:4	1:4	1:4	1:5	1:5	1:6	
Greater than 3000		1:4	1:4	1:4	1:4	1:5	1:5	1:6	1:6	1:6

*Slopes steeper than 1:4 are traversable but are not considered recoverable and should be avoided.

On RRR projects, the proposed work on the roadway may affect the foreslopes from the edge of pavement to the hinge point of the fill slope and ditch foreslopes.

The following points should also be noted:

- When the existing roadway geometrics are retained and the foreslopes are steeper than 1:4, reshaping to provide a flatter foreslope is desirable.

- There are cases where the roadbed width will not accommodate foreslopes of 1:3 or flatter. There also may be restrictions on filling of ditches to provide width or widening of embankments. When this occurs, consider strengthening the existing pavement structure through a recycling-in-place process rather than overlaying the project. A narrower pavement width to maintain a 1:3 foreslope and prevent an undesirable edge drop-off is also a reasonable solution.

- It is desirable to flatten crossroad/road approach foreslopes to 1:10. Provide at least a 1:4 minimum slope. Move the crossroad/road approach drainage away from the mainline to maintain the integrity of the clear zone and reduce the length of pipe required.

e. Roadway Ditches. The ditch cross section must be adequate to accommodate drainage of the pavement and cutslope. Chapter 7 covers the details of hydraulic design.

Ditches should have a streamlined cross section for safety (Chapter 8) and ease of maintenance. Wide ditch bottoms are used in rock fallout areas as well as in projects designed with side borrow.

Generally, roadway ditches have a "v" shape formed by the foreslope from the subgrade shoulder and cut slope. The depth of the ditch is dependent on hydraulic needs. It should normally be from 150 to 300 millimeters below subgrade for safety and maintenance purposes. When hydraulic needs dictate ditches of greater capacity, a flat bottom ditch takes precedence over deepening the v-ditch.

The designer should obtain computer plots of the roadway ditch profiles to check for sags in the ditch line. These profiles will show where the installation of culverts or the construction of special ditch grades will eliminate ponding.

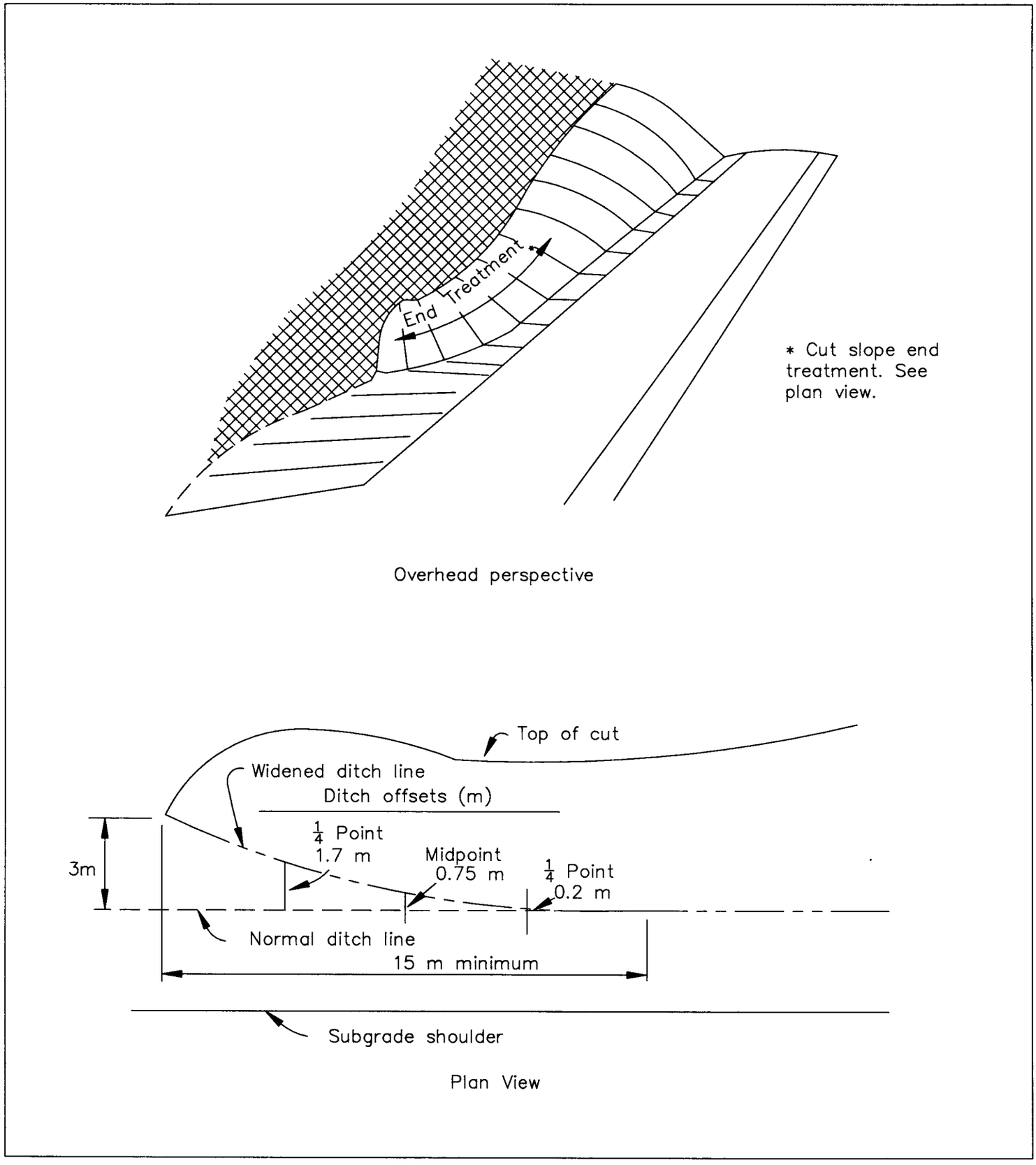

Figure 9-10
Typical Cut Slope End Treatment

and will enhance aesthetics, safety, and maintenance. Slopes 1:3 are generally traversable by a vehicle that has run off the road but do not provide for vehicle recovery. Slopes 1:3 and flatter are also traversable by self-propelled mowers, and should be used at locations where the grass will be regularly cut. High cuts and fills normally have steeper slopes.

Cuts have a high visual impact, therefore, the design of cut slopes requires careful consideration. In some cases, it is desirable to use the same slope throughout the cut, while in other situations a constant distance to the catch point stake and a continuously varying slope may be appropriate.

In steep terrain, the slopes may be varied slightly from standard slopes in order to better fit the topography or eliminate high "sliver" cuts or fills. Transition slopes between common material and rock require special consideration. Blend the ends of cut slopes into the natural terrain by rounding, flattening, or otherwise shaping the ground line.

Transition fill slopes from the main portion of the fill into the cut section. Transitions between flat and steep slopes should be sufficiently long to provide a pleasing appearance. A transition from a 1:4 slope to a 1:1.5 slope may require a distance of 50 meters or more to appear natural.

Table 9-8 lists commonly used slopes for cuts and fills in earth materials. Use this table as a guide, along with the recommended slopes in the geotechnical report, to design the slopes on the project. All fill slopes steeper than 1:4 should be evaluated for safety. (See Chapter 8.)

Geotechnical reports may not be available for the project when beginning a design. If this is the case, design cut and fill slopes based on available survey or field review data. When a geotechnical report becomes available, the designer must review the slopes initially used and make any necessary adjustments in the earthwork design.

Table 9-8
Desirable and Maximum Slopes

Cut and Fill Slope Ratios for Soil Materials							
Height (meters)	**Slope Type**	**Flat**		**Rolling**		**Mountainous**	
		Desirable	**Maximum**	**Desirable**	**Maximum**	**Desirable**	**Maximum**
0-1	Cut	1:6	1:4	1:6	1:4	1:6	1:3
	Fill	1:6	1:4	1:6	1:4	1:6	1:4
1-3	Cut	1:4	1:3	1:3	1:2	1:3	1:2
	Fill	1:4	1:4	1:4	1:4	1:3	1:3
3-4.5	Cut	1:3	1:2	1:3	1:2	1:3	1:2
	Fill	1:4	1:3	1:4	1:3	1:3	1:1.5
4.5-6	Cut	1:3	1:2	1:2	1:2	1:2	1:1.5
	Fill	1:3	1:2	1:3	1:2	1:2	1:1.5
Over 6	Cut	1:2	1:1.5	1:2	1:1.5	1:2	1:1.5
	Fill	1:3	1:2	1:3	1:1.5	1:2	1:1.5

NOTE: Cut and fill slopes steeper than 1:2 should be avoided in clay or silty soils subject to erosion. Fill slopes steeper than 1:1.5 may be used in critically tight areas with geotechnical guidance when the fill material is composed of quality rock.

g. Rock Cut Slopes. Generally, rock slopes vary from near vertical to 2:1, depending on the type and quality of rock, joint patterns, fractures, cross bedding, etc. Rock slopes dipping toward the roadway may require flatter slopes.

High cuts, particularly in weathered or weak rock, may require fallout ditches for stability and safety. A fallout ditch at the bottom of high rock cuts keeps falling rock from encroaching on the highway. A geotechnical investigation will determine the need for fallout ditches, their width, and necessary configuration.

When soil or highly weathered rock overlays the solid rock, overburden benches at the top of the solid rock may be desirable. The overburden slope should range from 1.33:1 to 1:2, depending on the type and depth of overburden and the steepness of the topography. When the rock surface is known, compound slopes work very well.

From a safety viewpoint, rock cuts should be vertical or nearly vertical if the rock will stand on these slopes. Under these conditions, falling rocks seldom roll once they hit the ditch. Rock cuts on the inside of curves designed on 5:1 or flatter slopes prevent the appearance of an overhang to drivers.

Figures 9-11 and 9-12 provide guidance for designing rock cuts and fallout ditches. However, the final design shall rely on the recommendations in the geotechnical report. Typical sections for rock cuts should be shown on the plans.

The normal rockfall protection is provided by the typical V-ditch with the minimum width shown in Figure 9-11. Rock slopes higher than 10 meters from shoulder grade may require wider fallout ditches and the geotechnical staff should be consulted. Cuts less than 6 meters in height generally do not require a fallout ditch.

The added rock protection features shown in Figures 9-11 and 9-12 may be applicable on higher volume highways experiencing falling rock. The geotechnical unit should recommend or approve these features before inclusion in a project.

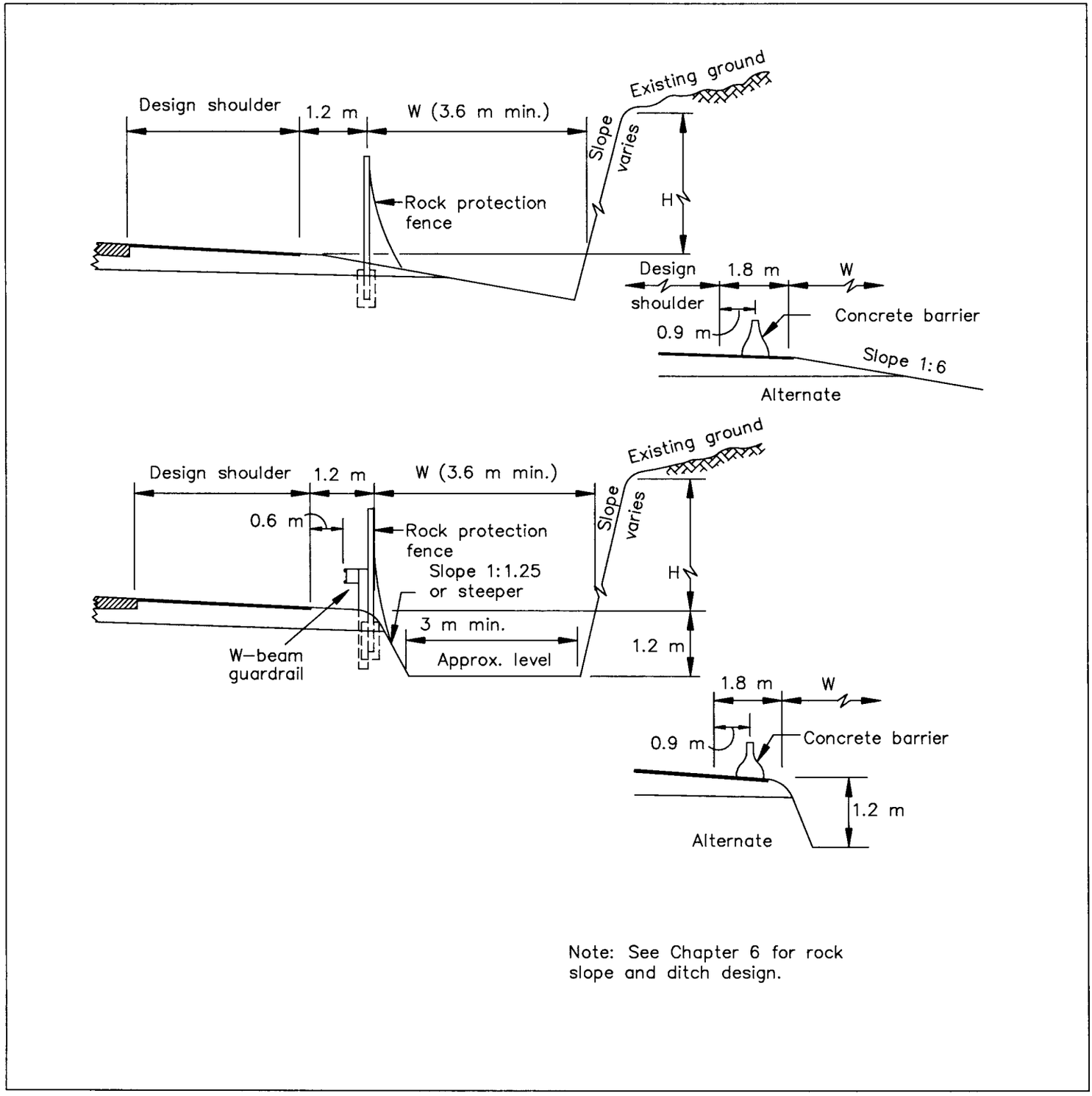

Figure 9-11
Falling Rock Control

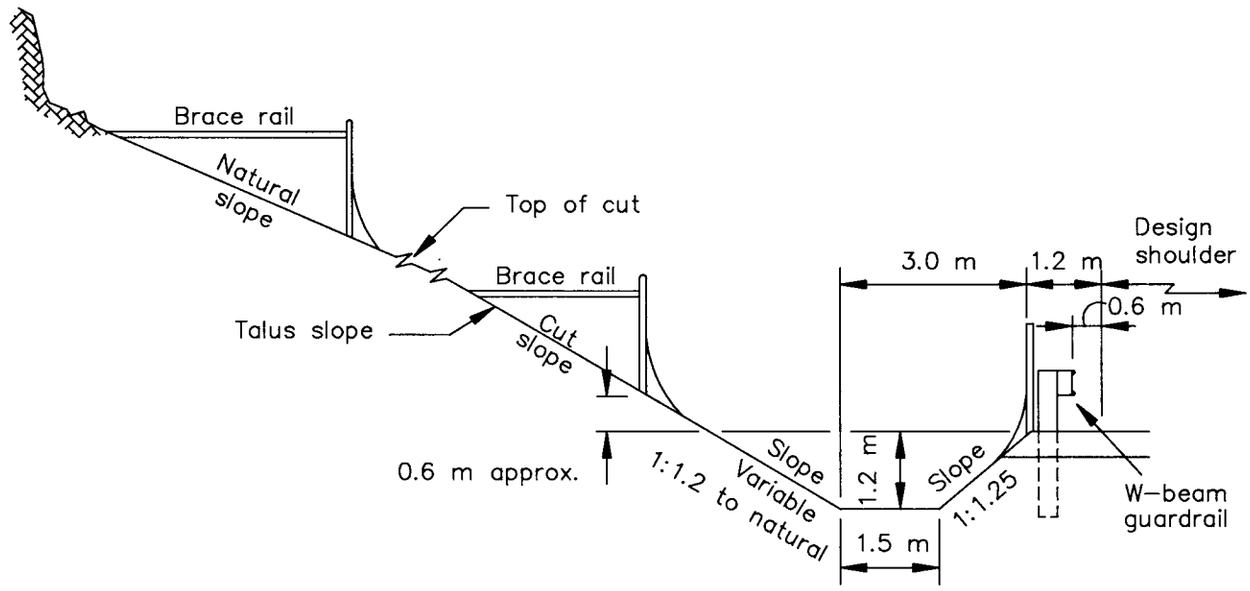

Notes: Design fence for installation within a zone of 30 meters to 60 meters maximum from base of cliff (slope measurement).

Rock protection fence may be used in conjunction with concrete barrier alternate depending on site conditions.

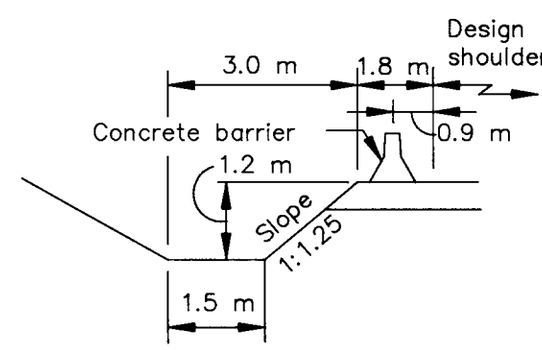

Alternate

Figure 9-12
Rolling Rock Control

h. Serrated Slopes. Serrated slopes are a series of small steps in soft rippable rock cuts having slope ratios between 1.3:1 and 1:2. The steps allow weathering and decomposing rock to accumulate to provide a growing medium for plants. The flat steps also retain moisture for use by the growing plants. When using serrated slopes, take into consideration local environmental conditions, soil, and plant growth potential. Figure 9-13 shows a typical section of a serrated slope.

Include a drawing in the plans showing step tread and rise dimensions. Generally, the step rise varies from 0.5 meters for easily ripped rock to 1.5 meters for harder rippable rock. The step tread width is equal to the rise multiplied by the cut slope ratio.

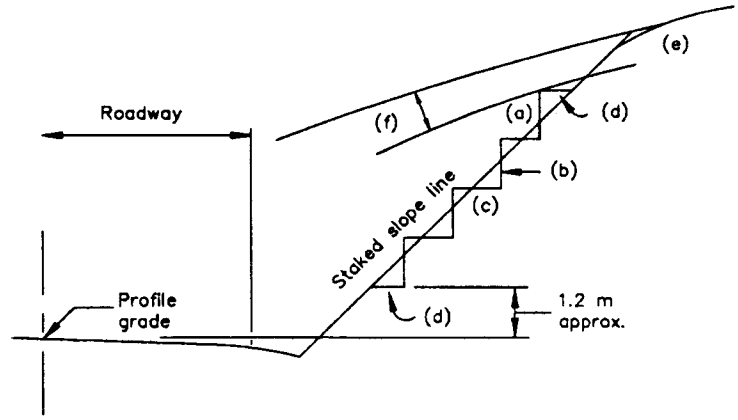

Notes:
(a) 1:0.75 maximum slope.
(b) Step rise variable from 0.5 to 1.5 meters.
(c) Step tread = (a)(b)
(d) Ending step width = 0.5 (c).
(e) Normal slope rounding.
(f) Overburden area–variable slope ratio.

Figure 9-13
Serrated Slopes

I. Slope Rounding and Clearing Limits. Rounding at the top of cut slopes is especially important to reduce erosion and ensure long term stability and revegetation of cut slopes. It also adds to the aesthetics of the finished project by blending the slope into the natural terrain. The amount of rounding may depend on the environmental impact and on the desires of the agency having jurisdiction.

It is FLHO policy to encourage the use of slope rounding on all projects.

For low fills, it is desirable to have a clearing width beyond the edge of the travel lane that provides a clear zone for vehicles that may run off the road. This applies to daylighted sections and low cuts except in guardrail locations. Refer to Chapter 8 for information on determining clear zone widths.

In some cases the horizontal sight distance near intersections and on the insides of horizontal curves requires wider clearing than normal. Figures 9-5 and 9-6 will aid in determining widening needed to provide adequate site distance. When wider clearing is necessary, it shall show on the plans.

There are special cases where it is desirable to widen the clearing to create openings and irregularities in a long straight clearing line. The treatment will depend on the type, size, and density of the trees and ground cover and on the terrain. Each case merits consideration on an individual basis.

8. Miscellaneous Roadway Widening. Roadways often require special consideration for additional widening for curves, auxiliary lanes, turnouts, etc.

a. Curve Widening. The rear wheels of longer vehicles do not follow or track the front wheels on horizontal curves. To accommodate this, it is good practice to increase traveled way widths on curves, particularly when lane widths are less than 3.6 meters.

Traveled way widening values are shown in Table III-22 on page 217 in the Green Book. Place the widening on the inside of curves and transition it throughout the length of the superelevation runoff. The final centerline striping should split the pavement to provide equal widening to both lanes.

b. Auxiliary Lanes. Auxiliary lanes adjoin the traveled way and provide for parking, speed change, turning, weaving, truck climbing, passing, or other purposes supplementary to through-traffic movement. They also maintain lane balance and accommodate entering and exiting traffic.

(1) Parking Lanes. The design of arterial or expressway facilities should only permit emergency stopping or parking. Within most urban areas existing and developing land uses require on-street parking. This may also be true of small rural communities located on arterial highway routes.

When land use development requires parking lanes, consider only parallel parking. Do not use diagonal or angle parking without a careful analysis of operational characteristics of the facility.

The width of parking lanes can vary from 2.1 to 3.6 meters depending on the use of the lane for purposes other than parking automobiles. Refer to the Green Book, pages 411-413, 474, 521, and 539 for criteria on design of parking lanes.

(2) Speed Change Lanes. Vehicles use acceleration and deceleration lanes, including tapered areas, when entering or leaving the through traffic lanes. There are no definite warrants for providing speed change lanes. The Green Book provides guidance on the use of these lanes on pages 749-751, 781-782, 952-957. Figures 9-14 and 9-15 in this chapter provide distances for deceleration and acceleration lengths required for automobiles.

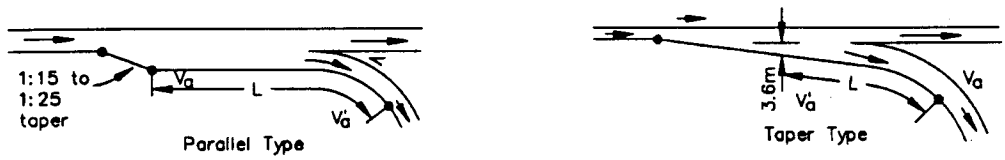

For Right–turn corner design, see Exhibit 9.9

Highway Design Speed, V (km/h)	Average Running Speed, V_a (km/h)	Deceleration Length, L (meters) For design speeds of exit curve, V' (km/h)							
		Stop Condition	20	30	40	50	60	70	80
		For Average Running Speed on Exit Curve, V'_a (km/h)							
		0	20	28	35	42	51	63	70
50	47	75	70	60	45	–	–	–	–
60	55	95	90	80	65	55	–	–	–
70	63	110	105	95	85	70	55	–	–
80	70	130	125	115	100	90	80	55	–
90	77	145	140	135	120	110	100	75	60
100	85	170	165	155	145	135	120	100	85
110	91	180	180	170	160	150	140	120	105
120	98	200	195	185	175	170	155	140	120

Adjustment Multiplier
For Grades of 3 percent or more

Percent Grade	Upgrade	Downgrade
3% to less than 5%	0.9	1.2
5% or More	0.8	1.35

Figure 9-14
Right Turn Deceleration Lanes for Non-Controlled Access Highways

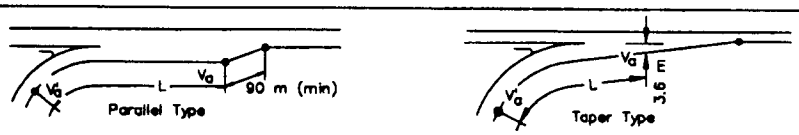

For right-turn corner design see exhibit 9.9.

Highway		Acceleration Length, L (meters) For Entrance Curve Design Speed, (km/h)							
Design Speed (km/h)	Speed Reached, V_a (km/h)	Stop Condition	20	30	40	50	60	70	80
		And Initial Speed, V'_a							
		0	20	28	35	42	51	63	70
50	37	60	–	–	–	–	–	–	–
60	45	100	85	70	–	–	–	–	–
70	53	145	125	110	85	50	–	–	–
80	60	195	180	165	135	100	55	–	–
90	67	275	260	240	210	175	130	50	–
100	75	370	345	330	300	265	220	145	55
110	81	430	405	390	360	330	285	210	120
120	88	520	505	500	470	445	400	335	245

Note: Uniform 50:1 to 70:1 tapers are recommended where lengths of acceleration lanes exceed 400 meters.

Adjustment Multiplier for Grades of 3 percent or more						
Highway Design Speed (km/h)	Ratio of Length of Grade to Length of Level for Design Speed of Turning Roadway Curve (km/h)					
	40	50	60	78	80	All Speeds
	3 to 4 percent upgrade					3 to 4 percent downgrade
60	1.3	1.3	–	–	–	0.70
70	1.3	1.4	1.4	–	–	0.70
80	1.3	1.4	1.4	1.5	–	0.65
90	1.4	1.5	1.5	1.5	1.6	0.65
100	1.4	1.5	1.5	1.5	1.6	0.60
110	1.5	1.6	1.7	1.7	1.8	0.60
120	1.5	1.6	1.7	1.7	1.8	0.60
	5 to 6 percent upgrade					5 to 6 percent downgrade
60	1.5	1.5	–	–	–	0.60
70	1.5	1.6	1.7	–	–	0.60
80	1.5	1.7	1.9	1.9	–	0.55
90	1.6	1.8	2.0	2.1	2.2	0.55
100	1.7	1.9	2.2	2.4	2.5	0.50
110	2.0	2.2	2.6	2.8	3.0	0.50
120	2.3	2.5	3.0	3.2	3.5	0.50

Figure 9-15
Right-Turn Acceleration Lanes for Non-Controlled Access Highways

(3) Turning Lanes. The designer will find criteria for left-turn lanes and right-turn lanes under *Intersections at Grade* in Section 9.4.B.

(4) Weaving Sections. The Green Book covers weaving sections on pages 84 and 91-93 and 909-910.

(5) Climbing Lanes. Normally, climbing lanes are synonymous with truck traffic and steep grades. They should also be considered in recreational or other areas subject to slow-moving traffic.

Steep downgrades have a negative effect on capacity and safety when used on facilities with high traffic volumes and numerous trucks.

There are instances when providing a truck lane for slow moving downhill traffic (such as trucks, vehicles with trailers, or recreational vehicles) is appropriate. Design climbing lanes independently for each direction of travel. Consider climbing lanes on two-lane highways under the following circumstances:

- The upgrade traffic volume exceeds 200 VPH.
- The upgrade truck volume exceeds 20 VPH.
- The level of service E or F exists on the grade.
- A reduction of two or more levels of service occurs when moving from the approach segment to the grade.
- Trucks will experience a speed reduction of 15 km/h or greater.

For anyone unfamiliar with the *level of service* concept, it is difficult to visualize the operating conditions that characterize levels of service A through F. Table II-5 on pages 88-89 of the Green Book presents a brief description of the operating characteristics for each level of service and type of highway.

Refer to pages 241-264 in the Green Book for details on designing climbing lanes on two-lane highways. The *Highway Capacity Manual* contains sample calculations on pages 8 through 21 inclusive.

For justification and design criteria for climbing lanes on multilane highways, read Chapter 3 in the *Highway Capacity Manual* and the text in the Green book beginning on page 281.

(6) Passing Lanes. Refer to the Green Book and the *Highway Capacity Manual* for information on the design of passing lanes.

c. Slow Moving Vehicle Turnouts. Technically these turnouts are not auxiliary lanes. They do provide room for a slow moving vehicle to pull safely off the roadway, then re-enter the through lane after faster moving vehicles pass.

Generally, the need for a turnout occurs on paved roadways (1) with limited passing opportunities, (2) when slow-moving vehicles are prominent but do not warrant climbing lanes, and (3) where the cost of an auxiliary lane is prohibitive.

Figure 9-16 provides guidance for width and length of turnouts. The riding surface of a turnout should be similar to the adjacent travel way. Provide adequate sight distance so the vehicle can re-enter the traffic stream safely. Sign all turnouts to identify their presence.

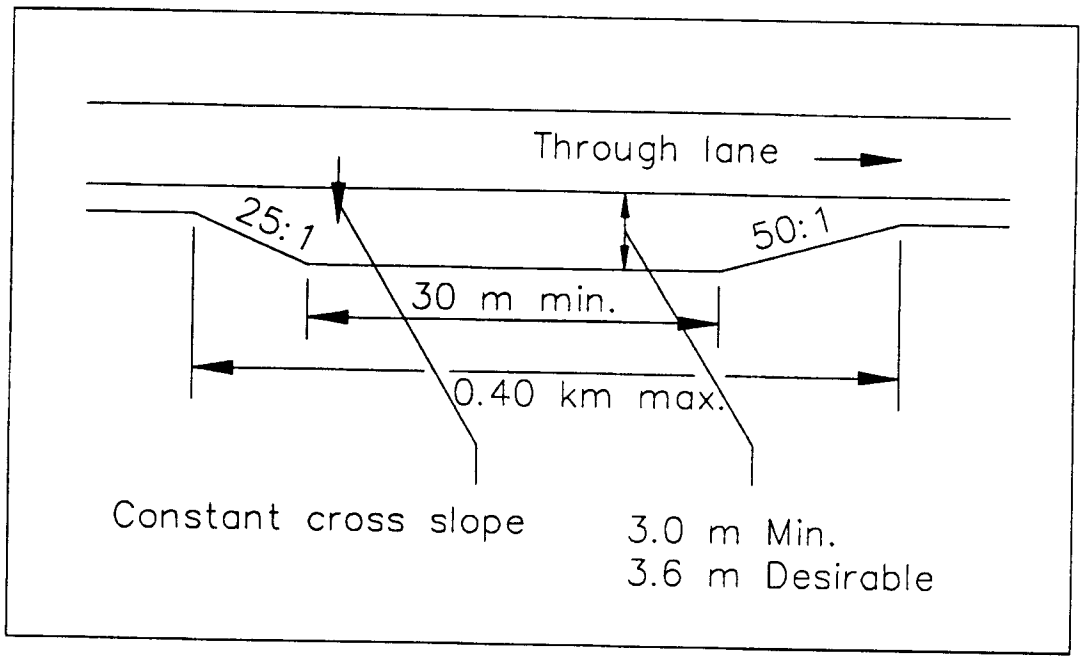

Figure 9-16
Slow Moving Vehicle Turnout

subsurface. Their purpose is to extend the service life, provide additional pavement strength, restore or improve the original cross section, improve the ride of the roadway, and enhance safety. An RRR project should not decrease the existing geometrics of the roadway section. See TRB Special Report 214, *Designing Safer Roads* for additional information.

Funding restrictions may prevent improvement of existing highways to the desirable standards. Therefore, when the pavement condition reaches minimal service level, there is a need for cost effective pavement and improvement projects.

RRR projects reflect and emphasize the economic management of the highway system. Therefore, economic considerations will largely determine the scope of work.

Many factors influence the scope of a RRR project, such as the following:

- Roadside conditions
- Funding constraints
- Environmental concerns
- Changing traffic and land use patterns
- Pavement condition
- Accident data

Acquisition of additional right-of-way to construct RRR improvements is sometimes necessary. Horizontal and vertical alignment modifications, if any, should be minor.

The Designer should review the project in the field and include those items that will be practical enhancements to the project. These items may include the following:

- Roadside obstacle removal
- Drainage improvements
- Slope rounding or flattening
- Traffic barrier
- Traffic control devices
- Shoulder improvements
- Minor widening
- Bridge rails
- Intersection improvements
- Railroad-crossing improvements
- Illumination

Many of these work items will enhance the project by providing the broadest scope of improvement possibilities.

Carefully establish project limits, particularly where widening occurs. Avoid ending the project at potentially hazardous locations, such as a narrow structure or a severe vertical or horizontal curvature. Provide the appropriate safety measures when these conditions are unavoidable.

All safety elements of an RRR project merit specific consideration. Collect and analyze accident numbers, types, and rates for the project to identify safety problem areas. In addition, field reviews can identify potentially hazardous conditions.

While an analysis may indicate deficiencies in one or more of the following areas, each needs examination:

- Horizontal and vertical alignment
- Cross-sectional geometrics
- Traffic control
- Access
- Railroad crossings
- Pedestrian/bicycle facilities
- Bridges
- Illumination
- Signing
- Channelization
- Skid-resistant surface texture

Improvements to the roadway surface may result in increased operating speeds. To maintain an acceptable level of operational safety, examine the geometrics and modify them if necessary.

Horizontal and vertical curvature and stopping sight distance directly relate to the speed of vehicles. As a consequence, major deviations from the standards may cause speed related problems.

When curvature is the cause of accidents, consider some corrective action. This can range from positive guidance (such as placement of additional warning signs and markings) to reconstruction. Often, existing horizontal and vertical alignments are adequate, and an analysis will show they only require signing and marking.

Consider alignment improvements when accident experience is high and previously installed warning signs, markings, or other devices have been ineffective.

When the design speed for a horizontal or vertical curve is less than 20 km/h below the design speed of the adjacent sections, and has a low accident history, signs and marking may be applicable instead of reconstruction. When the difference is 20 km/h or more or the design speed of the horizontal or vertical curve is less than 30 km/h, corrective action is essential. If improvement is not possible, provide the appropriate signs and markings and other provisions to obtain proper speed transition.

Sight distance improvement on horizontal curves and at intersections consists of flattening cut slopes, selective clearing, or both. On completion of this work, measure the actual sight distance, determine the maximum comfortable speed, and sign and mark the location.

As a rule, grades cannot be flattened on RRR projects. However, steep grades and restricted horizontal or vertical curvature in combination may warrant corrective action.

It is desirable to provide a roadside recovery area as wide as practical using the guidelines in Chapter 8. Make an evaluation to determine the consistency of the clear zone throughout the project limits. Following this, determine the severity of each situation. Give particular attention to the clear zone at identified high roadside accident locations (fixed object accidents). Perform a cost analysis of appropriate measures (e.g., do nothing, remove, protect) to mitigate the hazardous conditions. On the basis of these analyses, select the appropriate remedial action. An adequate clear zone on horizontal curves at the end of a downgrade merits special attention.

Consider widening to provide additional clear distance through short sections of rock cuts. In longer rock cuts, protrusions are cut back or protected where warranted. A review of accident data will help to define dangerous obstructions. Good engineering judgment, cost effectiveness, and consideration of environmental and community impacts may also influence decisions.

Under urban conditions, the minimum setback for obstructions should be outside the paved shoulder or 600 millimeters behind the curb. Where there will be sidewalks, it is desirable to locate the obstructions behind the sidewalk.

Safety items reduce the severity of run-off-the-road accidents. These items include traffic barriers (including bridge rails), flattening slopes to eliminate the need for barriers, crash cushions, breakaway or yielding sign supports, and breakaway luminaire supports.

Refer to section 10.3.F in Chapter 10 for a discussion on bridges on RRR projects.

All RRR projects should consider the following safety enhancements:

- Upgrading all rail and end treatments to current standards. Evaluate existing traffic barrier rail, bridge rail, guardrail, and end treatments for need and compliance with standards.
- Extending cross pipes outside of the clear zone if practical, or
- Installing beveled pipe ends or end sections for both parallel and cross-drain structures located in the clear zone.
- Relocating, protecting, or providing breakaway features for sign supports and luminaries.
- Protecting exposed bridge piers and abutments.
- Modifying raised drop inlets that present a hazard in the clear zone.

Sign and mark all RRR projects according to the MUTCD.

B. Intersection Design. This section sets the basic guidelines to use in the design of at-grade intersections. The designer should also be familiar with "At-Grade Intersections", Chapter IX of the Green Book. For information on intersections with grade separation and interchanges, see Chapter X of the Green Book.

Intersections at grade are a critical part of highway design. The efficiency of a road network depends on the effectiveness of the intersections. The number of possible conflicts at intersections is very high compared to normal roadway operations. Good design practice will minimize these areas of high accident potential. Traffic, driver characteristics, physical features, and economics influence the design of channelization and traffic control measures.

It would be ideal to design every intersection based on an engineering analysis using traffic data and accident records, but this is seldom practical. When an engineering study is appropriate, it should include recommendations for channelization, turn lanes, acceleration and deceleration lanes, intersection configuration, and traffic control devices.

The speed at which vehicles approach and move through the intersection and the size of the design vehicle govern the minimum dimensions of an effective intersection. Such features as minimum sight distance, curve radii, and lengths of turning and storage lanes directly relate to speed and design vehicle. (See paragraph 9.4.B.2.)

1. Intersection Types. The three-leg, four-leg, and multileg configurations are the three basic types of intersections. (See Exhibit 9.3.)

- The three-leg configuration is generally referred to as either a tee or wye intersection. The tee intersection has three legs intersecting so the angle between the stem of the tee and the remaining legs is 60° to 120°. It is desirable to keep this range between 75° and 105° with 90° being the ideal. The tee shape provides better driver visibility than the wye shape. It is preferable to have the minor traffic movement on the stem of the tee.

  In the wye intersection, the angle between two of the intersecting legs is less than 60°. The wye shape can cause driver confusion when two legs diverge from the stem and thus requires careful signing.

- The four-leg intersection is the most common type of intersection and may be right angled, oblique, or offset. The desirable angle between any two respective legs is between 75° and 105° although the Green Book will allow a range from 60° to 120° with 90° preferred.

  The right-angled crossing is easily signed and signalized, provides good visibility, and is the safest to negotiate by drivers and pedestrians. The oblique crossing creates problems with driver visibility, pedestrian safety, and vehicle turning angles. The offset intersection has low intersection capacity, is difficult to negotiate and comprehend, and is difficult to effectively sign and signalize. The through traffic movement on the major roadway should have the straight alignment.

- The multileg intersection has more than four intersecting approach legs and can form several configurations. For purposes of this discussion, the rotary intersection is considered to be a multileg. These intersections have visibility problems and poor turning angles, confuse the road user, and are difficult to sign, mark, and signalize. This type of intersection occurs when a highway diagonally cuts across a street grid system or when more than four approach legs intersect. The multileg configuration is not appropriate for new highways, and the reconstruction of existing multilegs to the four-leg type intersection is very desirable.

- The "roundabout" intersection, a small radius version of a rotary intersection/traffic circle has worked well on some low-speed routes as replacements for intersections with 4-way stops. It has been very successful in reducing accidents, but failures have shown that site selection is critical to successful performance.

2. Design Vehicle. Design vehicles have selected dimensions and operating characteristics. Each represents a class of vehicles that establish design controls for specific conditions.

The design vehicle for any intersection depends on the roadways involved, the location of the intersection, and the types and volume of vehicles using the intersection. Table 9-9 provides a guide to determine the design vehicle appropriate for various intersections.

Design an intersection so the design vehicle can make all turning movements without encroaching on adjacent lanes, opposing lanes, curbs, or shoulders. Using a taper at the exit end of the right-turn corner will reduce the radius and the pavement area. For the recommended right-turn corner design see Section 9.4.B.8, Right-Turn Lanes.

Table 9-9
Intersection Design Vehicle

	Design Vehicles		**Radius (meters)**	
Intersection Type	**Desirable**	**Minimum**	**Desirable**	**Minimum**
Junction of Major Truck Routes	WB-19	WB-19	35	30
Junction of State Routes	WB-15	WB-12	30	23
Ramp terminals	WB-15	WB-12	30	23
Other Rural	WB-12	SU	23	17
Urban Industrial	WB-12	SU	23	17
Urban Commercial	SU	P	17	11
Residential	SU	P	17	11

Note:

P	=	Passenger car, including light delivery trucks.
SU	=	Single unit truck.
WB - 12	=	Semitrailer truck, overall wheelbase of 12 meters.
WB - 15	=	Semitrailer truck, overall wheelbase of 15 meters.
WB - 19	=	Semitrailer truck, overall wheelbase of 19 meters.

3. Alignment. When the gradient of an intersecting roadway exceeds the cross slope of the through pavement, it is desirable to adjust the vertical alignment using suitable grades and vertical curves. Any adjustment should maintain sight distance.

To determine the maximum grade of a minor road at an intersection refer to Exhibit 9.4. In areas of ice or snow conditions it is desirable to use a 3 percent maximum grade, but the grade should not exceed 5 percent. A minimum grade of 0.5 percent will provide for adequate drainage at an intersection.

When the desirable criteria is not attainable for an intersection, suitable curves introduced into the horizontal alignment of the less important road will reduce the angle of the intersection. Exhibit 9.5 shows some examples of intersection horizontal realignments.

Often the cross slope of a road is in the same direction as the intersecting cross road. In this case adjust the vertical alignment of the cross road to meet the pavement cross slope of the highway.

If possible, avoid or eliminate intersections where the cross slope of the curving road is not in the same direction as the grade of the intersecting cross road. If this is unavoidable, adjust the vertical alignment of the cross road far enough from the intersection to obtain a desirable alignment. (See Exhibit 9.4.)

4. Sight Distance. The operator of a vehicle approaching an at-grade intersection needs an unobstructed view of the entire intersection and a sufficient length of the intersecting roadway. Under some conditions, when it is impractical to provide adequate site distance for cross road traffic to safely enter the main road, it may be necessary to install traffic signals. (See Part IV of the MUTCD.)

Many intersections use stop signs on the minor road for traffic control. In this case, the driver stopped on the minor road must see enough of the major highway to safely cross before a vehicle on the major highway can reach the intersection.

See Exhibit 9.6 for minimum sight distance along the major road for level conditions. In Exhibit 9.6, the time for acceleration value (t_a) multiplied by the applicable adjustment factor from Table 9-10 will adjust the minimum sight distance to reflect grades of the minor road approach.

Table 9-10
Sight Distance Adjustment Factor

Design Vehicle	**Cross Road Grade (percent)**				
	- 4	- 2	0	+ 2	+ 4
P	0.7	0.9	1.0	1.1	1.3
SU	0.8	0.9	1.0	1.1	1.3
WB- 15	0.8	0.9	1.0	1.2	1.7

Within the sight triangle, remove, adjust or lower cut slopes, hedges, trees, signs, utility poles, or anything large enough to constitute a sight obstruction (see the Green Book, pages 696-721). Eliminate parking and offset signs to prevent sight distance obstructions.

The SU vehicle serves as the design vehicle for most rural highway conditions, including most recreational roads. If there is significant semi-truck traffic, use the WB-15 or WB-19 vehicles. In areas where SU or WB vehicles are not prevalent, and ROW restrictions prohibit adequate sight triangle clearing, the P design vehicle may be applicable.

At some intersections the turning volume from a stop-controlled minor roadway is significant enough to conflict with through vehicles on the major roadway. In these instances, sight distances shown in Table 9-11 are recommended. The distances shown in the table for P or SU design vehicles are the sight distances required for P vehicles to turn onto a two-lane highway and attain an average running speed without being overtaken by a vehicle going the same direction. The distances shown in the table for the WB-15 and WB-19 design vehicles are the sight distances required for them to complete a left turn. Using sight distances less than that required for the P or SU vehicle will require the through traffic to reduce speed.

For additional information on sight distance and for sight distance across divided highways, refer to Chapter IX of the Green Book.

Table 9-11
Sight Distance for Turning Vehicles

Design Speed (km/h)	Design Vehicle P or SU	WB - 15	WB - 19
30	110	130	150
40	120	155	180
50	145	195	225
60	160	235	270
70	235	270	315
80	315	315	365
90	395	395	405
100	475	475	475
110	565	565	565

5. Channelization. Channelization separates traffic into definite paths of travel using pavement markings or raised islands. Channelization facilitates the safe and orderly movement of vehicles, bicycles, and pedestrians.

Pavement markings used to delineate travel paths generally consist of painted stripes reflectorized with glass beads. Raised Pavement Markers (RPM), reflectorized and nonreflectorized, may supplement pavement striping when increased visibility is desirable. RPM may replace painted stripes when climatic or traffic conditions warrant. (See Chapter 8).

Curbing is permissible for channelization under the following conditions:

- Prevention of mid-block left turns.
- Raised divisional and directional islands.
- Raised islands with luminaries, signals, or other traffic control devices.
- Pedestrian refuge islands.
- Landscaped areas within the roadway.

Curbing is undesirable at any location where painted pavement markings with or without reflective lane markers attain the same objective.

Try to limit the use of curbing to urban and suburban highways with a design speed of 60 km/h or less. On these types of highways, drivers expect to encounter confined facilities and raised channelization works well.

The two general classifications of curbing for channelization are mountable curbs and barrier curbs of the types shown in Figure IV-4 on page 346 of the Green Book. For safety considerations, use mountable curbing whenever possible. Use barrier curb for raised islands with luminaries or traffic control devices and for pedestrian refuge.

Table 9-12 shows the minimum offset distances recommended for barrier curb. For mountable curbing installations, the left offset distance is optional.

Table 9-12
Offset Distances for Barrier Curb

Lane Width (m)	Left Rural (m)	Left Urban (m)	Right Rural and Urban (m)
3.6	0.3	0.3	1 minimum
3.3	0.6	0.3	1 minimum
3.0	1.0	0.6	1 minimum

6. Traffic Islands. A traffic island is a defined area between traffic lanes for control of vehicle movements, pedestrian refuge or traffic control devices. The use of raised traffic islands should be limited to those urban and suburban highways with a design speed of 60 km/h or less.

Traffic islands perform these major functions:

- Channelization islands control and direct traffic movement.
- Divisional islands separate opposing or same direction traffic streams.
- Refuge islands provide safe haven for pedestrians.
- Miscellaneous islands provide for proper placement of traffic control devices.

Divisional and refuge islands are normally elongated and should be at least 1.2 meters wide and 6 meters long.

Channelization islands are normally triangular. In rural areas they should contain an area of at least 7 square meters with 9 square meters as a desirable minimum. In urban areas where speeds are low, islands about two-thirds this size may be acceptable. Islands with traffic control devices or luminaries and islands crossed by pedestrians require 18 square meters as a minimum area.

Design triangular shaped islands as shown in Exhibit 9.7. The offset distances illustrated apply to islands constructed with mountable curbs. For painted islands in rural areas, these offset distances are desirable but not mandatory. With barrier curbing provide the minimum offset distances shown in Table 9-12 but not less than those shown in Exhibit 9.7. Increase the offsets of the approach noses of the islands when the minimum offset distance shown in Exhibit 9.7 is increased.

Avoid offset distances wider than 1.5 meters as this gives the appearance of an added lane. Reflective RPMs may supplement island markings.

Raised islands at crosswalk locations require barrier-free access for the handicapped. (See Section 9.4.F.6.)

Design approach ends of islands to provide adequate visibility and advance warning of their presence. Islands should not cause a sudden change in vehicle direction or speed. Transverse lane shifts should begin far enough in advance of the intersection to allow gradual transitions. Avoid introducing islands on a horizontal or vertical curve. When islands on curves are unavoidable, adequate sight distance, illumination, and/or the extension of the island must be considered.

See Part V of the MUTCD and the Green Book for additional design criteria for islands.

7. Left-Turn Lanes. A left-turn lane is an auxiliary lane on the left side of a one-directional pavement for use as speed change and storage of left-turning vehicles. Left-turn movements result in more critical traffic conflicts than do right-turn movements. Design left-turn channelization with enough operational flexibility to function under peak loads and adverse conditions. Left-turn lanes are an economical way to reduce delays and accidents at intersections.

At unsignalized intersections on two-lane highways, use Figure 9-17 for guidance on the need for left-turn lanes. Left-turn lanes are appropriate at locations where accidents involving left- turning vehicles are high. Refer to Figures 9-18 through 9-20 and Table 9-13 to determine the storage length required. The minimum storage length should be 30 meters. At signalized intersections the left-turn storage length is dependent on capacity and level of service criteria found in the *Highway Capacity Manual*.

Exhibit 9.8 shows typical left-turn geometrics to accommodate a left-turn lane. Offsets and pavement widening should be symmetrical about centerline or baseline. Widen on one side only when right-of-way, topography, alignment restrictions, or other circumstances prevent symmetrical widening. See the Green Book for additional design guides and for left-turn treatments on multilane facilities.

8. Right-Turn Lanes. Right-turn corner designs should allow the design vehicle to turn without encroaching on adjacent lanes, curbs, shoulder edges, or opposing traffic lanes. Exhibit 9.9 shows typical design for the design vehicles using a taper at the exit end of the right-turn corner. For a simple radius without the exit taper, the values in Table 9-9 apply, however, this will increase the pavement area. At signalized intersections some encroachment on adjacent lanes of the approach leg is usually acceptable to obtain an adequate radius.

Where larger radii than those given in Table 9-9 or Exhibit 9.9 are desirable, compound curves may reduce the need for additional pavement area. See the Green Book for a discussion of compound curves and other guidelines for corner radius returns.

Right-turn movements at intersections influence intersection capacity, although not usually to the same extent as left-turning movements. Conflict between the opposing traffic and the right-turning vehicle is not a factor. Right-turning vehicles are affected by pedestrian movements, especially those in the crosswalk of the leg into which the turn is being made.

Consider right-turn lanes at unsignalized intersections when:

- Approach and right-turn traffic volumes are high. See Figure 9-21.
- Presence of pedestrians requires right-turning vehicles to stop in the through lanes.
- Restrictive geometrics require right-turning vehicles to slow considerably below the speed of the through traffic.
- The decision sight distance is below minimum at the approach to the intersection.
- Accidents involving right-turning vehicles are high.

At signalized intersections, a capacity analysis using the *Highway Capacity Manual* will determine if right-turn lanes are necessary to maintain the desired level of service.

Where adequate right-of-way exists, providing right-turn lanes is cost effective and can provide increased safety and operational efficiency.

Table 9-13
Additional Left-Turn Storage for Trucks at
Unsignalized Two Lane Highway Intersections

Standard Storage Length	Trucks in Left-Turn Movement				
	10%	20%	30%	40%	50%
	Additional storage length to be added to standard values of left turn lengths.				
(meters)	(meters)	(meters)	(meters)	(meters)	(meters)
30	7.5	7.5	15	15	15
45	7.5	15	15	22.5	22.5
60	7.5	15	22.5	30	30

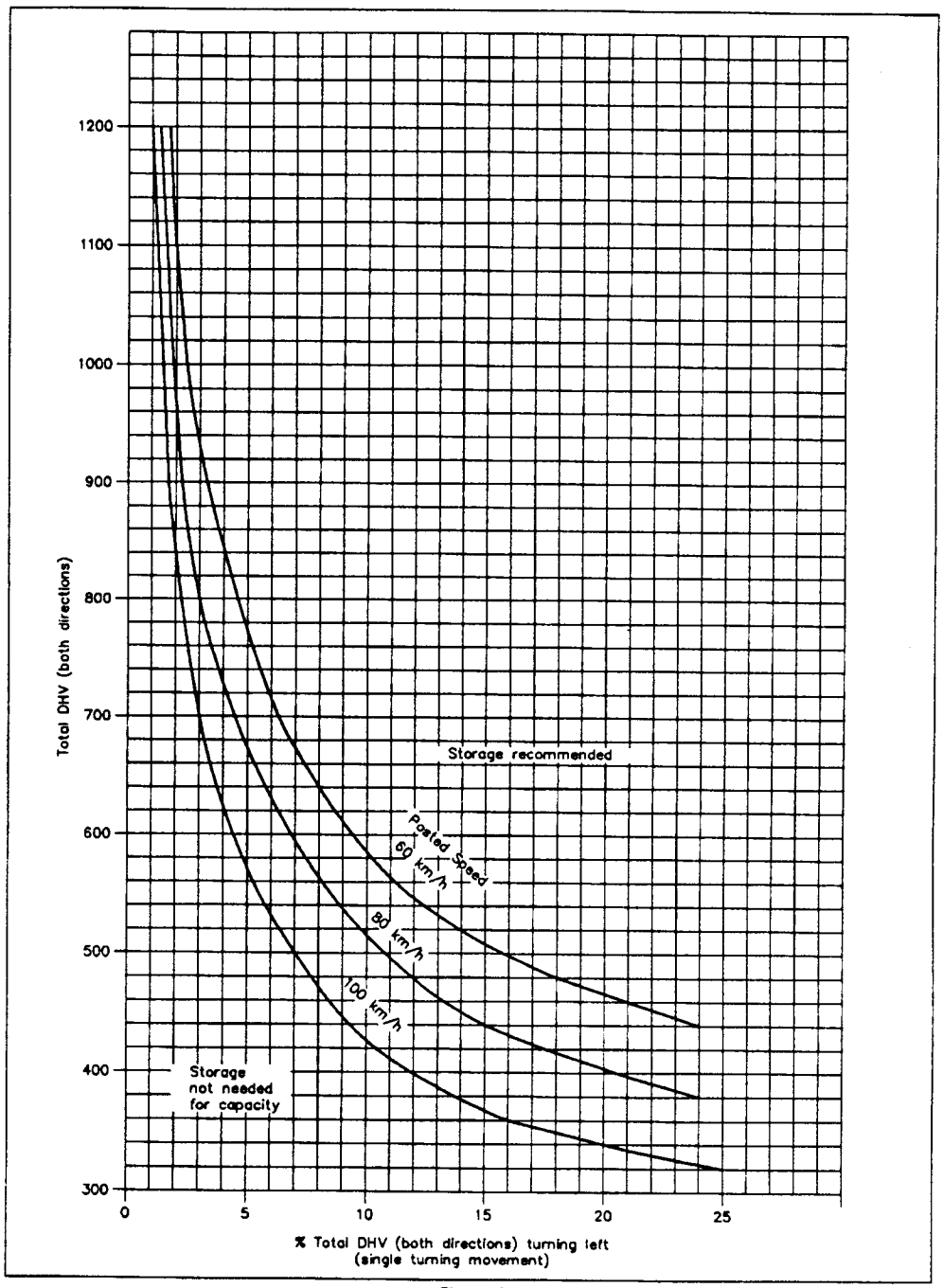

Figure 9-17
Left Turn Storage Guidelines for Unsignalized Two-Lane Highway Intersections

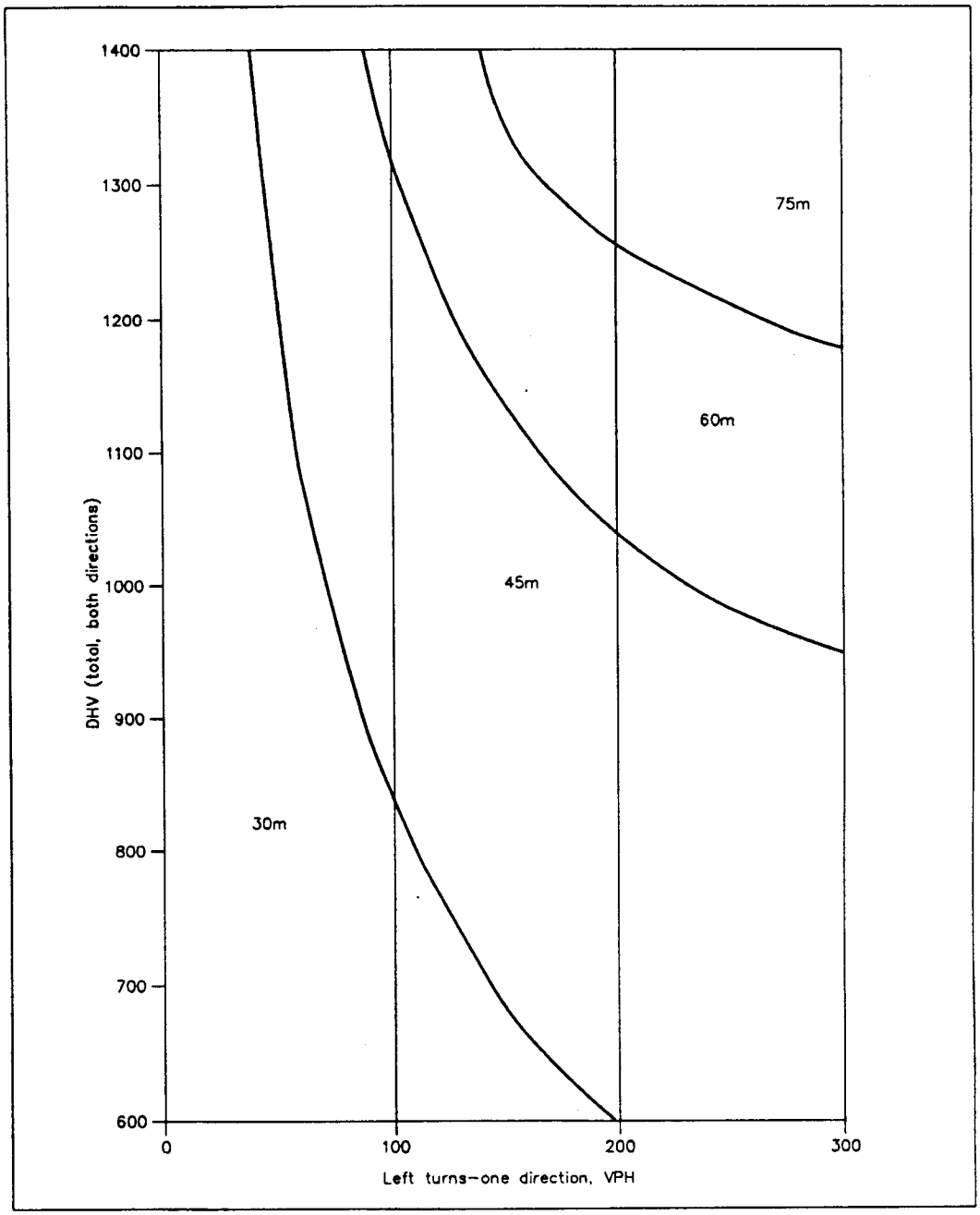

Figure 9-18
Left-Turn Storage Lengths for Unsignalized Two-Lane Highway Intersections
60 km/h Posted Speed

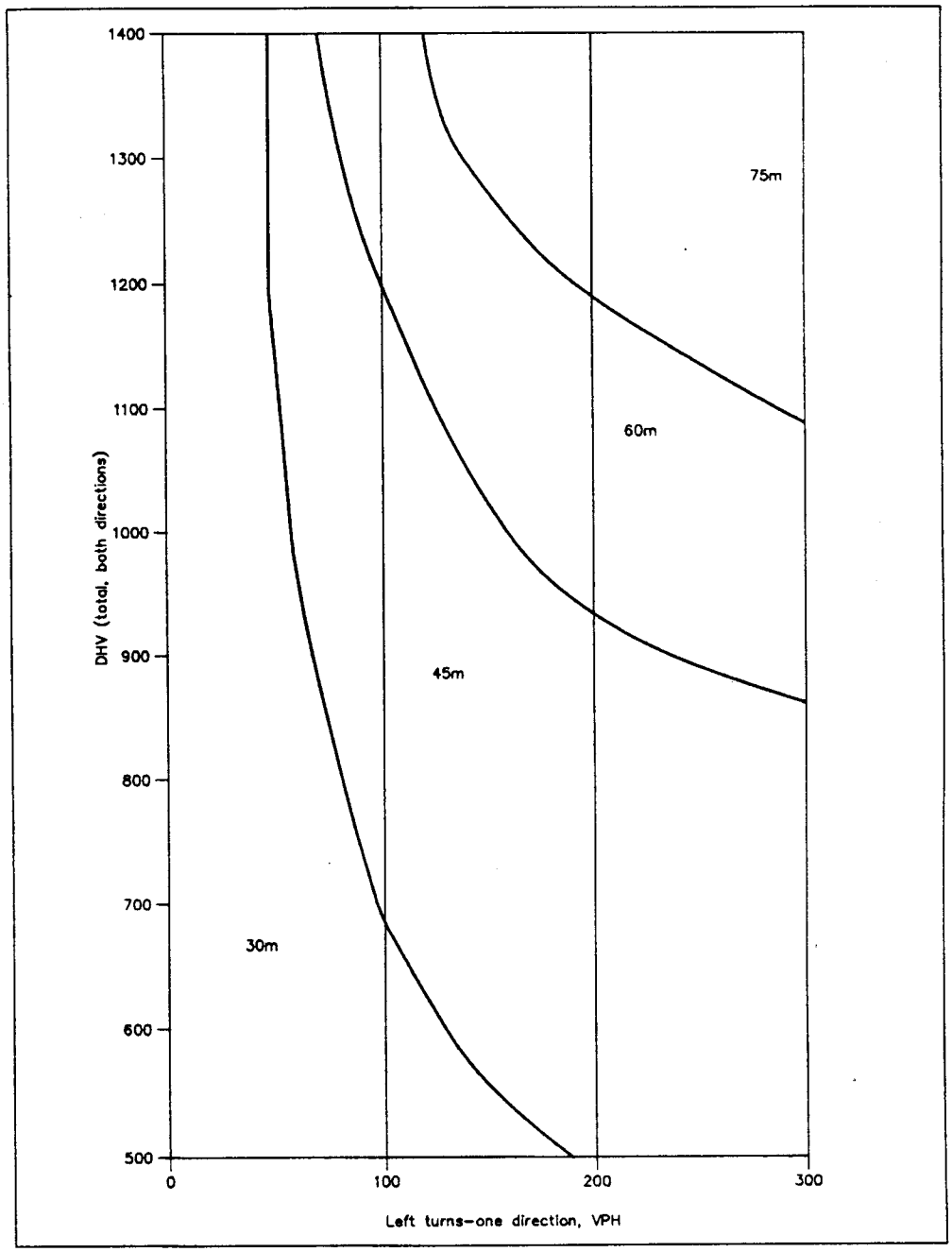

Figure 9-19
Left Turn Storage Lengths for Unsignalized Two-Lane Highway Intersections
80 km/h Posted Speed

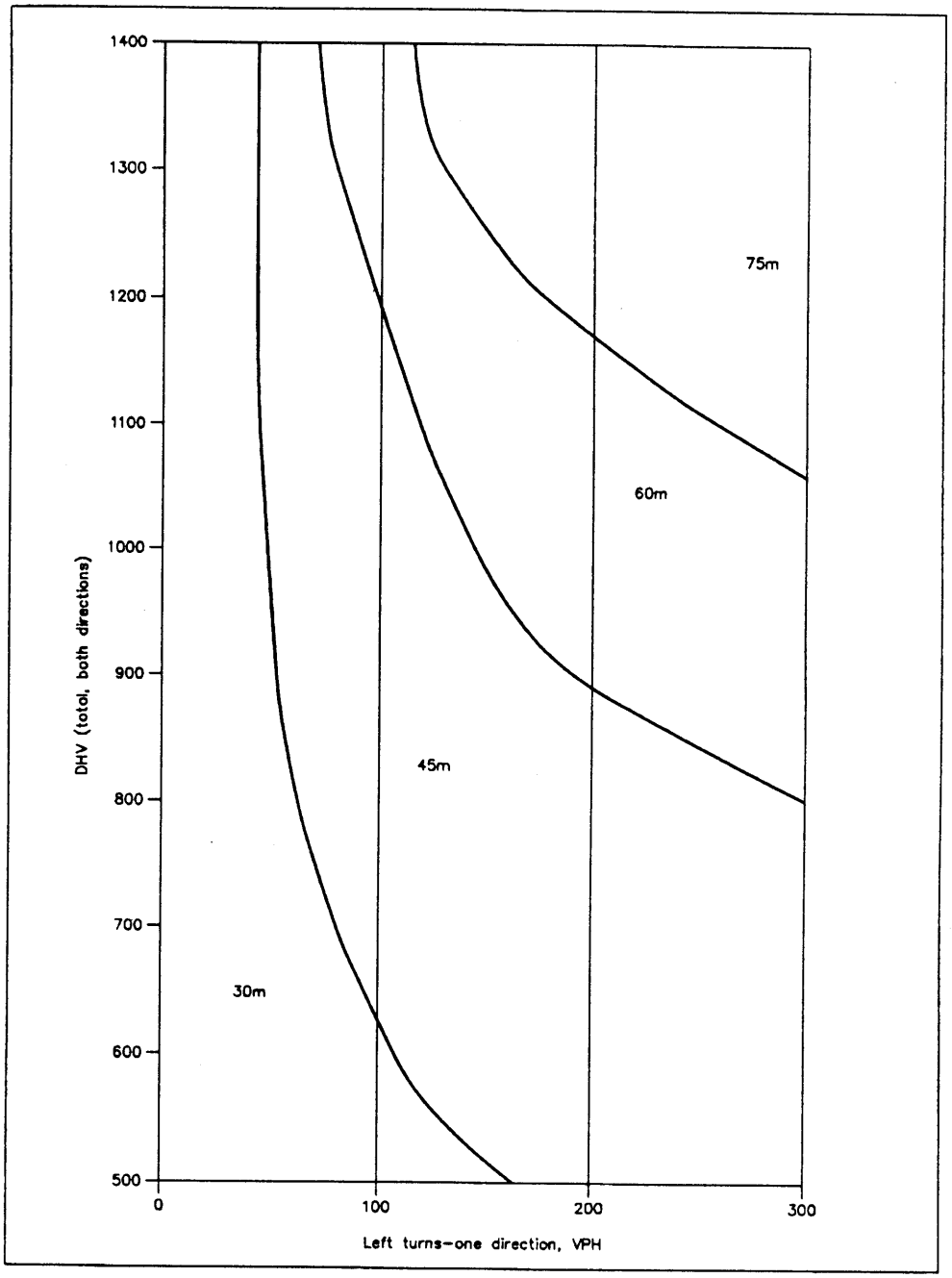

Figure 9-20
Left-Turn Storage Length for Unsignalized Two-Lane Highway Intersections
100 km/h Posted Speed

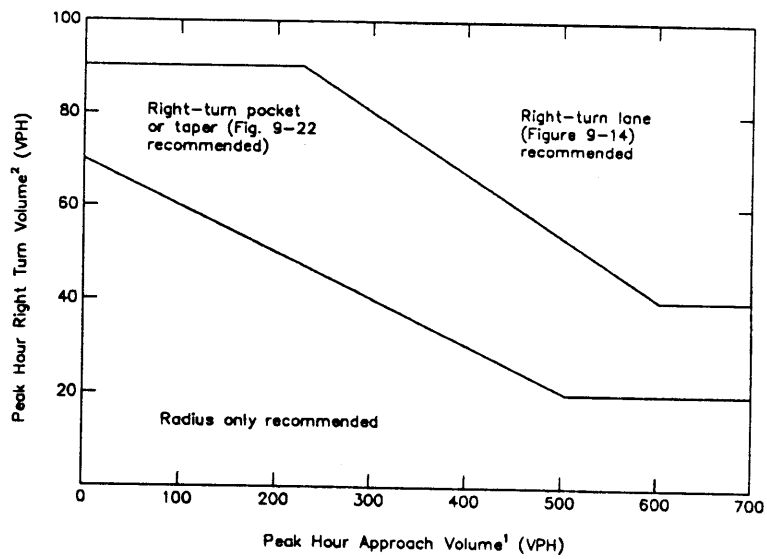

Note:

1. For two-lane highways use the total peak hour approach volume. For multilane, high speed (posted at 70 km/h or above) highways use the total peak hour approach volume per lane.
2. Reduce peak hour right turn volume by 20 VPH when all three of the following conditions are met.

- Posted speed ≤ 70 km/h
- Right-turn volume > 40 VPH
- Total approach volume < 300 VPH

Figure 9-21
Right-Turn Lane Guidelines

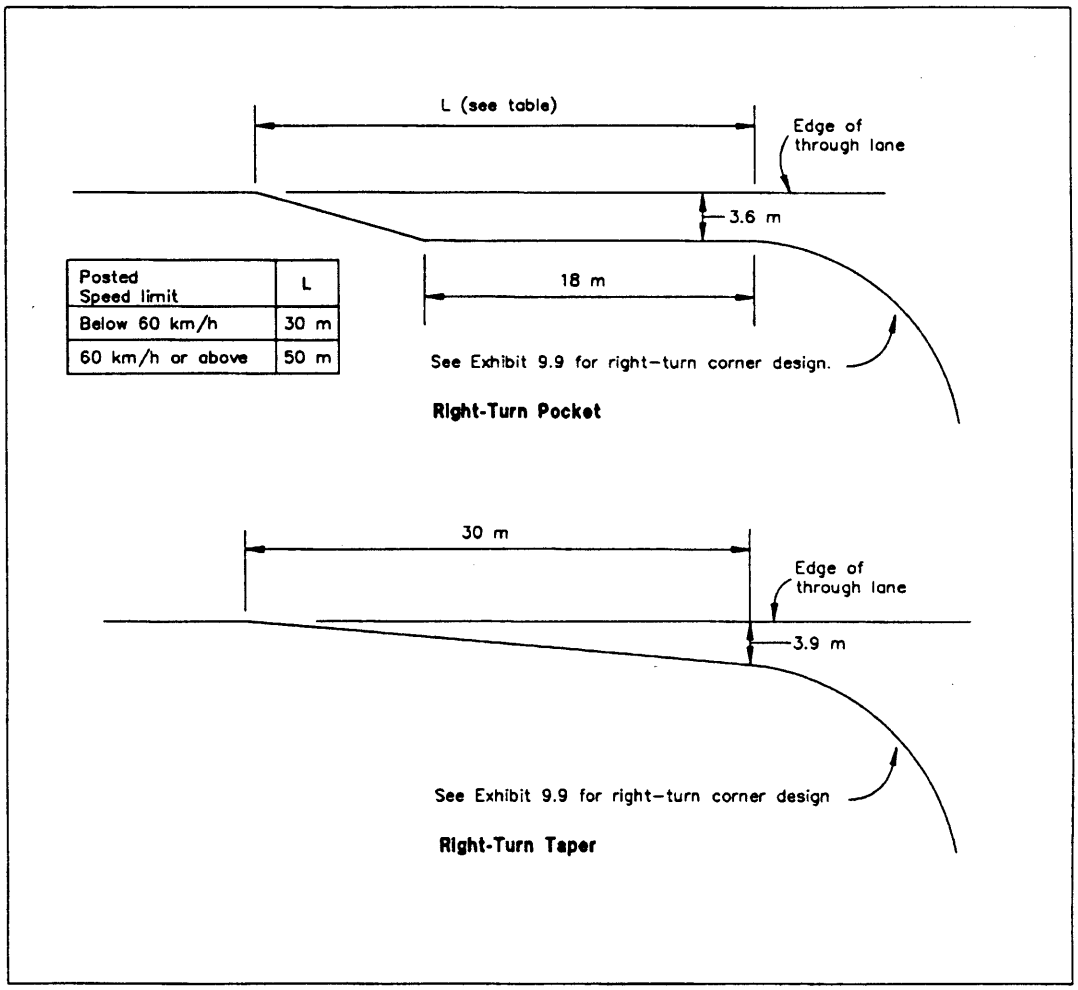

Posted Speed limit	L
Below 60 km/h	30 m
60 km/h or above	50 m

Figure 9-22
Right-Turn Pocket or Taper

C. Earthwork Design. Earthwork design includes the following:
- Clearing and grubbing.
- Additional clearing and grubbing.
- Removal of structures and obstructions.
- Excavation and embankment.
- Rock blasting.
- Watering.
- Earthwork geotextiles.
- Structure excavation and backfill for selected major structures.
- Structure excavation and backfill.
- Drainage layer.
- Roadway obliteration.
- Linear grading.
- Subgrade stabilization.

1. Clearing and Grubbing. Clearing widths should extend 1.5 meters beyond the outer limit of slope rounding for cuts and 1.5 meters beyond the toe of fill. Additional clearing and grubbing includes the following:

- Additional clearing or selective thinning of vegetation at the top of high cuts.

- Additional clearing for scalloping and vistas to improve visual appearance.

- Additional clearing required for the accommodation of utilities.

- Additional clearing to allow for southern exposure to assist in melting snow in high elevations.

Clearing and grubbing widths may be limited under the following situations:

- Decreased clearing allowance in sensitive areas, such as National Parks or areas where the preservation of existing vegetation is critical.

- Decreased clearing because of limited Right-of-Way (R/W).

Clearing and grubbing quantities are normally computed using IHDS except for isolated areas of special clearing outside the normal section. Clearing quantities are usually not computed until the earthwork runs are completed.

2. Removal of Structures and Obstructions. This work consists of the removal and disposal of all buildings, fences, structures, old pavements, abandoned pipelines, and other obstructions that cannot remain in place.

3. Classification of Roadway Excavation. Classification of roadway excavation for design purposes includes the following types:

- Common material. Common material is largely earth or earth with detached boulders less than 0.5 cubic meter.

- Rippable rock. Rippable rock refers to material ready for excavating after it is loosened by a ripper.

- Solid rock. Solid rock includes hard rock in place, ledge rock, and boulders requiring drilling and blasting equipment for removal. Any blasting work will be performed according to the rock blasting section specifications.

In addition to the excavation for the construction of roadways, there may be excavation for drainage ditches, culverts, bridges, and grade separation structures. Still another type of excavation includes dredging operations for hydraulic fills.

Using data furnished by the geotechnical staff, the designer shall check the characteristics of the material to be excavated or placed in embankments. The excavation used for embankments will range from rock to earth and have shrink/swell factors assigned for design purposes.

4. Shrink and Swell Factors. Roadway excavation, however classified, is commonly but not always measured in the original, undisturbed position. The specifications must carefully state the place and method of measurement because almost all materials change volume in their movement from cut to fill.
Excavated earth will expand beyond its original volume in the transporting vehicle but will shrink below the excavated volume when compacted into the fill. To illustrate, 1 cubic meter of earth in the cut may use 1.25 cubic meters of space in the transporting vehicle, and finally occupy only 0.65 to 0.85 cubic meters in the embankment. This, of course, depends on its original density and the compactive effort applied. This difference between the original volume in a cut and the final volume in a fill is the shrink.

Excavated rock placed in a fill occupies a larger volume. This change in volume is the swell. When the voids in the rock embankment become filled with earth or other fine material, the volume in the fill will just about equal the combined volumes in the two source locations.

For light soil excavation and for fills constructed on swampy ground subject to settlement, the shrink may range from 20 to 40 percent or even greater. For moderate soil excavation, the shrink ranges from 10 to 25 percent. For heavy soil excavation with deep cuts and fills, expect a range of about 15 percent shrink to 5 percent swell. Shrink generally includes the slight waste in transporting material from cut to fill and the loss for material which escapes beyond the toe of slopes.

A swell of 5 to 25 percent is anticipated in rock excavation depending upon the proportion of solid rock and upon the size of the rock placed in the fill.

When available, the design should incorporate actual field shrink and swell factors for like material used on adjoining projects.

The shrink factor is determined as follows:

$$\text{Shrink Factor} = \frac{1}{1 + \frac{\%\ shrinkage}{100}}$$

Thus, if the percent of shrink is 25 percent, the shrink factor would be:

$$\frac{1}{1 + \frac{25}{100}} = \frac{1}{1.25} = 0.8$$

The swell factor for rock excavation is determined as follows:

$$\text{Swell Factor} = 1 + \frac{\%\ swell}{100}$$

Thus, if the percent of swell is 25 percent, the swell factor would be the following:

$$1 + \frac{25}{100} = 1.25$$

See Table 6-12 in Chapter 6 for additional information on shrink/swell factors used for commonly specified materials.

The shrink/swell factors are applied to the excavation quantities to arrive at the adjusted quantities.

Settlement results in shrinkage, but one is not directly proportional to the other. Do not confuse shrink with subsidence. Subsidence is settlement of the entire embankment due to unstable foundation conditions such as placing heavy fill on swampy soil.

5. Design Cut and Fill Slopes. The design of cut and fill slopes depends upon the characteristics of the material. The designer should refer to the geotechnical report for recommended slope ratios. (See Section 9.4.A.)

6. Slides. When the geotechnical report identifies potential areas for slides, the earthwork excavation quantities may require adjustment to cover potential slide removal. Provisions to dispose of excess slide material are necessary.

7. Balancing Earthwork. The earthwork is balanced when the volume of excavation (with the appropriate allowances made for shrink and swell) equals the volume of embankment. The designer shall consider the quantity of subexcavation removed and disposed of and the quantity of topsoil reserved for slopes in the balance quantities.

It frequently happens that the material from the adjacent cuts is not sufficient to make the intervening fill. In this case, material is borrowed from outside the construction limits.

When there is an excess of excavated material, it may be necessary to dispose of the material. Instead of long hauls, it may be more economical to dispose of the material by widening shoulders or placing the material in disposal areas than to pay hauling costs.

If the earthwork is not in balance, the designer should try to adjust grade line or centerline so it is in balance. When a balanced project is not practical or desirable, the designer either disposes of excess material or borrows material to obtain a balance. Designated disposal or borrow areas require clearance for proper ownership, rights-of-use, environmental concerns and applicable permits.

Waste areas for the disposal of excess material and/or borrow areas should be shown on the plans.
The geotechnical unit should evaluate the sites and provide recommendations on classification of borrow material or slopes and depth of embankment allowed in disposal sites. Appropriate environmental considerations apply to reclamation or rehabilitation plans for the disposal sites.

The designer can use the added quantities feature of IHDS to add or subtract cut or fill from the quantities computed for the roadway.

8. Haul. Haul consists of transporting material from its original position to its final location. The cost to haul material is required to estimate the unit price of various items of work.

Haul costs are based on hauling on cubic meter of material a distance of one kilometer or one metric ton of material a distance of one kilometer using the shortest practical route. Haul costs are generally based on a rate per unit of time for the hauling equipment multiplied by the actual time needed to move the material. This is quite simple when calculating costs to haul from crusher sites to the middle of a project. It becomes more complicated when estimating costs to haul material between balance points on a grading project. The use of a mass diagram as described below will provide the quantity of haul within balance points as well as other helpful information. It is up to the designer to determine cost estimate based on historical data and the equipment needs and work rates to move the material.

9. Mass Diagram. A mass diagram is a continuous curve showing the accumulated algebraic sum of the excavation and embankment (cuts + fills -) from some initial station to any succeeding station. The points of the mass curve are plotted to a horizontal scale of distances (same as profile) and a vertical scale of cubic meters (such as 1 millimeter = 50 cubic meters).

The designer can prepare a mass diagram using IHDS to arrive at haul quantities for cost estimating purposes. The steps necessary to generate and interpret mass diagrams are explained in Part IX, Chapter 15 of the GEOPAK Users Manual.

The characteristic properties of a mass diagram (or curve) are as follows:

- The ordinate at any point on the mass curve represents the cumulative cubic meters to that point on the profile.

- Within the limits of a single cut, the curve rises from left to right. Within the limits of a single fill, it falls from left to right.

- Sections where the cumulative cubic meters changes from cut to fill correspond to a maximum. Sections where the cumulative cubic meters changes from fill to cut correspond to a minimum.

- Any horizontal line cutting off a loop of the mass curve intersects the curve at two points. Within this area the cut is equal to the fill (adjusted for shrinkage). Such a line is called a balance line.

- The loops that convex upward show that the haul from cut to fill is to be in one direction. Loops that concave upward indicate a reverse direction of haul.

A mass diagram can assist in balancing cuts and fills and showing the best distribution of materials. The mass diagram shows the most economical procedure for disposing of excavated material. It also shows which part to move forward or backward, and whether borrowing and wasting are advisable. It presents a graphic picture of the distribution of materials and the haul involved in the placement.

10. Computing Structural Excavation Quantities. To determine the quantity of structure excavation for pipe culverts, box culverts, or other drainage structures, plot a cross section at the location of the structure, plot the roadway template, and draw the grade line of the structure. Calculate the average end area and compute the excavation quantity.

Round the structure excavation for each pipe to the nearest cubic meter and show this quantity on the Drainage Summary sheet of the plans.

Structure excavation for foundation trenches for riprap, walls, etc., is calculated by average end areas and lengths and is shown on the plans where the work is to take place.

11. Subgrade Treatment. The geotechnical report should identify the location of and propose a solution for any subgrade problems, such as the following:

- Subexcavate unsuitable subgrade materials and use special backfill.

- Stabilize poor quality subgrade materials in-situ with additives such as lime, fly ash, or cement.

- Place special subgrade topping material.

- Use geotextiles to increase support values.

- Install special drainage systems.

- A combination of any of the above.

The designer is responsible for incorporating the appropriate corrective measures to be taken into the design and for including any special contract requirements and special drawings into the PS&E package.

12. Roadway Obliteration. Roadway sections no longer needed for traffic and located outside the cuts or fills are often obliterated. Obliteration consists of restoring the ground to approximately the original contour to produce a pleasing appearance by forming naturally rounded slopes.

The designer should evaluate the obliteration work and consider salvaging existing base rock or other surfacing materials for incorporation into the new construction.

Material from the old roadway used in the new roadway, and material from the new roadway used in obliteration of the old roadway, is paid for under Section 204 or other sections of the Standard Specifications. The designer may obtain topsoil or other recyclable materials in this manner.

13. Design Steps Using IHDS. The guides listed below represent the more commonly used portions of the IHDS. The designer should refer to IHDS manuals for details in the preparation of input to obtain specific output data.

Obtain the roadway template, cross-section, and other miscellaneous design information from the approved standards for input into the IHDS. See Subsection 9.4.A.7, Geometric Cross Section.

(1) Refer to Section 9.4.A in this manual for guidelines on the following topics:

- Aesthetic Consideration in Highway Design.
- Horizontal and Vertical Alignment Relationship.
- Establishing Control Points.
- Horizontal Alignment.
- Vertical Alignment.

Usually more than one horizontal or vertical alignment is studied. These studies deal with cost, alignment, safety, encroachment on waterways, right-of-way, aesthetics, maintenance, and operation. After the completion of the studies, one line is selected for further enhancement and refinement of design.

(2) Position the design line over the survey data provided using the controls and guidance mentioned above.

(3) Compute the station and coordinates of curve and PI points, bearings, tangent lengths, curve lengths, radii, tangent distances, and delta angles using the IHDS horizontal alignment program. Spiral functions are computed for spiraled curves.

Unless otherwise required, bearings computed to the nearest minute are acceptable. The arc definition for curves is used with few exceptions.

(4) Obtain a plot of the design profile.

(5) Using recommended design speed for the route, prepare a progressive listing of each tangent/curve, and determine the standard safe speed from charts found in the Green Book. Then adjust this standard safe design speed for local requirements such as snow and ice conditions, relatively steep grades, and specific requirements of the cooperating agency.

The IHDS program will automatically assign a superelevation rate and runoff length using criteria from the Green Book, pages 167 to 171. The designer may have to adjust these rates and lengths to comply with the safe speed guidance.

(6) Use the IHDS proposed cross section input file to obtain cross sections. Use input files to obtain end areas, catch points, earthwork volumes, accumulated cut and fill volumes, and the mass ordinates.

The IHDS uses the average end area method of determining volumes. The total volume of earthwork is the sum of the volumes of the prismoids formed by adjacent cross sections.

When using the average end area method, the prismoid is treated as a prism whose cross section is the mean of the two end areas of the prismoid.

$$V = L\left(\frac{A_1 + A_2}{2}\right)$$

Where:

V	=	Volume (cubic meters).
Al and A2	=	Cross sectional end areas (square meters).
L	=	Distance between the cross sections (meters)

This formula is approximately correct. Due to its simplicity and substantial accuracy in the majority of cases, it has become the formula in common use. It gives results, in general, larger than the true volume.

If desired, IHDS will adjust excavation volumes for curvature. Normally, this is not necessary, but in cases where there is a preponderance of curvature in one direction, consider adjustment.

Use the added quantities feature to add or subtract miscellaneous excavations for such work as subexcavation, road approaches, etc.

(7) Make any adjustments to the line or grade to balance the earthwork quantities. If a line change achieves this, repeat Steps (2) through (4). For a grade change repeat Steps (2) through (7).

(8) Compute the clearing quantities using the clearing program. The quantities should include the rounding shown on the standard plans or any other limiting parameters requiring adjustment to clearing distances beyond the slope stakes.

(9) Use the seeding program to compute the areas of seeding. The quantities for seeding should include the rounding shown on the plans.

D. Earth Retaining Structures.

1. Design:

a. Determination of Need: The first step in the earth retaining system design process is to determine that a retaining structure is needed. The determination may be needed early in the environmental/location stage of design, or it may come later, at the preliminary design stage. The Project Manager shall make this determination of wall need in consultation with other involved disciplines and agencies. The Project Manager shall consider environmental and historic constraints, as well as physical constraints.

The Project Manager shall determine if a retaining wall is the best choice to provide the needed function to meet the constraints established. Retaining wall systems shall be considered with other alternates, such as fills, cuts, changes in alignment, and mechanically stabilized earth (MSE) slopes. The decision process is too site specific to be completely defined, but the Project Manager should document the project conditions and constraints that were considered in the analysis.

b. Alternative Wall Systems: When a retaining wall is determined to be needed, the FLH shall permit all retaining wall system alternatives that are determined to be technically suitable, and aesthetically acceptable to land-owning agencies. The recent changes in technology have rapidly increased the number of retaining wall systems available, which has made determining the most suitable wall alternatives more difficult. This has highlighted the need for consistent design guidance to help Project Managers select and design appropriate wall types to be permitted at each site.

The Project Manager shall decide which alternative systems will be designed and included in the contract, and which wall systems will be permitted as alternative Contractor designs. Options the Project Manager may consider include:

- FLH to prepare designs for all competitive alternatives
- FLH to prepare designs for the most likely 1 to 3 alternatives
- FLH to list acceptable alternatives and the final selection and designs are prepared by the Contractor
- FLH to prepare designs for the most likely alternative(s) and permit additional alternatives which could be designed by the Contractor

Any of the four approaches may be appropriate depending on project conditions and constraints. On large projects the third option should generally be provided. On smaller projects the fourth option may be necessary. The final number of complete alternative designs included in the contract shall be determined by the Project Manager. The alternatives permitted for design by the Contractor shall normally include all remaining wall systems which the Project Manager determines to be technically suitable, economically competitive, and aesthetically acceptable to the land-owning agencies.

The Project Manager shall avoid permitting only one retaining wall system, if the system is proprietary. The Project Manager will insure that contracts specifying a proprietary wall system have at least one other reasonably competitive proprietary or non-proprietary wall system permitted as an alternative.

c. Design Guidelines: All alternatives permitted in FLH contracts shall be designed in accordance with the *Guidelines for the Design of Retaining Wall Systems*. These guidelines are a summary, mainly by reference, of acceptable design criteria and other information for each wall system which may be considered for use in FLH contracts. These guidelines assure consistent FLH designs and encourage competition by permitting as many Contractor designed alternatives in the contract as possible. These guidelines shall be used by the FLH in its designs, by A&E firms in designs done for FLH, and by the construction Contractor for alternative designs.

In addition to design criteria, the guidelines contain other information, including wall system limitations, materials specifications, and construction specifications necessary for a construction contract. A checklist of all retaining structure geometric and design data (original and final vertical profiles, beginning and ending stations, foundation capacity, backfill criteria, soils ∅ angle, etc.) needed for the design of each alternate wall system is included in the guidelines. This checklist will help insure the Project Manager provides all design data for consultant and Contractor designed wall systems in the contract package. The FLH guidelines permit consistent design and review of retaining walls. The guidelines will be updated as new retaining wall systems are added to the list of alternative wall systems which may be considered for use on FLH projects.

Each FLH division shall have a process to insure that any wall used on FLH projects is designed using the procedures in the design guidelines. The process must include a review of designs of proprietary walls and those prepared by A&E firms to insure the procedures in the *Guidelines for the Design of Retaining Wall Systems* have been used.

d. Selection of Wall Types: Once it has been determined that a wall is needed, the Project Manager shall determine which wall system alternatives shall be permitted. The Project Manager shall coordinate with the land-owning agency and a Federal Lands Highway (FLH) inter-disciplinary team. The team shall normally be made up of Geotechnical, Highway Design, and Bridge Design Engineers. The level of involvement of the individual team members will vary depending on the type and function of the wall. The Project Manager shall consider spatial, behavioral, and economic factors in determining the alternatives to be permitted. These evaluation factors include: 1) Constructability, 2) Maintenance, 3) Schedule, 4) Aesthetics, 5) Environment, 6) Durability or proven Experience, and 7) Cost.

The Project Manager shall document the selection process. The documentation may be especially useful when selection and non-selection of proprietary retaining wall systems are challenged. The Project Manager may limit the number of alternative wall systems to be permitted based upon an analysis of the specific constraints and conditions. The analysis shall consider the complexity of the site, and the estimate of the cost of the wall system in addition to the technical suitability of the wall system to the site.

The Project Manager normally will consider only retaining wall systems included as part of the *Guidelines for the Design of Retaining Wall Systems*, unless an unusual situation, or an experimental wall system is proposed by the interdisciplinary team. In these situations, the Project Manager must insure the design guidance and specifications are made available. The wall systems which are normally considered are listed in the *Guidelines for the Design of Retaining Wall Systems*. This list shall be updated as new wall systems are added, as provided in Section 9.4.D.5.d. below.

e. Retaining Wall Systems: A description of the retaining wall systems is included in the *Guidelines for the Design of Retaining Wall Systems*. Generally, all of these systems have design guidelines included in the *Guidelines for the Design of Retaining Wall Systems*. However, some systems described below may not be listed in the guidelines.

1) Design Considerations: A retaining wall is a structure built to provide lateral support for a mass of earth or material and a variety of dead and live load surcharges. See Exhibit 9.10 for examples of some general types of retaining walls. The layout, design specifics, and construction details of a wall consider the following:

- Highway geometrics.
- Topography and subsurface conditions
- Traffic characteristics.
- Length and height of wall required.
- Type of material to be retained.
- Type of foundation support available.
- Presence of ground water.
- Routine and special loading conditions.
- Visual appearance of the completed structure.

Retaining structures resist applied loads by a variety of methods including structure weight, structural stiffness and load transfer, and internal and external restraining elements.

Walls installed near the edge of a traveled way can serve as traffic barriers if they have an approved traffic barrier design incorporated into the wall details.

The wall selected must be capable of supporting the temporary loads which occur during retaining structure construction. The design surcharges for standard walls shall be shown on the standard drawings.

The design of a retaining structure consists of an analysis of loads that will act on the structure and the development of a structure to withstand these loads safely. In addition, the structure and adjacent soil mass must be stable as a system, and vertical and horizontal deformations anticipated must be within acceptable limits.

A primary cause of retaining wall failure is the additional load imposed by hydrostatic pressure due to saturated soils behind the wall. The design must provide adequate drainage facilities for the site to prevent entrapment of water.

Designs should use native soil for backfill if it meets the requirements for the particular wall system.

All retaining walls require an investigation of the underlying soils by the geotechnical unit. Chapter 6 provides details on conducting and reporting the investigation.

Where conditions warrant, retaining walls shall be designed with an aesthetically pleasing appearance compatible with other structures in the area and the surrounding terrain. Although economics generally dictate wall selection, an aesthetic wall facing treatment could be an overriding selection factor. Consistent architectural treatment and economy of scale will frequently result in the same wall type being used throughout any given project.

Aesthetic requirements may include the wall's material, the top profile, the terminals, and the surface finish for texture, color, and pattern. Short sections of walls should be avoided if possible.

The Project Manager shall give land-owning agencies, cooperators, and resource agencies an opportunity to provide guidance and recommendations for wall selections.

When the design includes proprietary wall systems, the designer shall contact the company representatives during the design stage to obtain general information on timeframes, detailing, oversight responsibility, and other factors necessary to complete the design and construct the wall. The wall companies will require specific site information such as typical cross sections, plan and profiles, soils and foundation criteria, and special design parameters.

All retaining walls not included in standard plans shall be designed by a structural or geotechnical engineer experienced in the wall type being designed. Hydraulics engineers shall review any wall designs potentially threatened by flood waters or located in a floodplain. Geotechnical engineers shall prepare external stability analyses and prepare or review all special foundation designs.

Information on wall design may be found in Chapter 10, Section 10.4.K (safety design factors and other criteria applicable to retaining walls) and Chapter 6, Section 6.4.C (wall foundation and backfill criteria).

2) Retaining Systems Types: There is a wide variety of retaining wall types available to the designer within each system. Each type has its limitations and usefulness. The following walls are commonly used in highway construction. Families of retaining wall systems have similar characteristics, advantages and disadvantages; yet each wall product within the family generally has some unique design and construction features. The general descriptions and advantages and limitations of each system are discussed.

Gravity Walls. Gravity walls are usually most cost effective for smaller wall areas and lower heights since they are relatively expensive because they are materials and labor intensive. They are generally most suitable for fill and widening applications.

- **Mass concrete walls.** The economic overall height of mass concrete walls is about 1.2 meters. Short sections with heights up to 2 meters are acceptable. Mass concrete gravity walls can be used in conjunction with cantilever walls if long stretches of design heights less than 1.2 meters are necessary.

- **Reinforced Concrete Cantilever and Counterfort Walls.** Cantilever walls have standard design heights up to 10 meters but are most economical below 6 meters. They lend themselves readily to a variety of aesthetic facial treatments.

  A concrete, L-type cantilever may be suitable where site restrictions do not allow for a footing projection beyond the face of the wall stem. This wall and counterfort walls require special designs. The major disadvantage of these walls is their low tolerance to settlement. Piling can provide adequate foundation support, but greatly increases the overall wall cost.

  Counterfort walls are economical compared to cantilever walls for wall heights less than 6 meters and for long wall lengths. The intricate forming required generally causes higher costs for counterfort walls than for cantilever walls above this height. Counterfort walls may also prove economical over MSE walls where base width considerations require a minimum width.

- **Buttressed Walls.** A buttressed wall is relatively expensive. It is frequently constructed where right-of-way is unavailable for other wall types. Historically these walls have been used in the 9 to 15 meter height range; however, more recently developed systems such as ground anchors and reinforced soil have reduced their application significantly.

- **Gabion Walls.** Gabion walls consist of compartmented metallic mesh containers filled with select 100-150 millimeter backfill. They have been successfully constructed to heights of 12 meters with adequate foundation support. The walls are somewhat flexible and tolerate some settlement. The walls are aesthetically pleasing because they blend well into areas of rugged terrain. Gabion walls are relatively inexpensive if a source of rock is locally available and labor is inexpensive.

- **Crib Walls.** Crib walls are somewhat flexible and will tolerate some differential settlement along the axis of the walls. Crib walls not constructed on tangent alignments usually require special detailing, particularly when the wall face is battered. Because open crib wall faces can be climbed, they are not recommended for urban sites where they will be accessible to the public. Project topography and cost of select backfill and labor significantly influence the cost-effectiveness of crib walls. Crib wall are constructed without structural foundations and are not suitable where marginal foundation soils exist.

  Concrete crib walls have been constructed up to heights of 15 meters, but a 6-meter height is probably the limit of economic consideration. Concrete crib may be closed face and, therefore, useful where impinging drainage is a problem. Concrete crib may also be precast modules of various sizes and shapes. Some walls have planters incorporated in their faces to grow shrubs and vines to conceal the walls.

  Metal crib walls have standard design heights of up to 11 meters. The wall elements are light in weight, easily transported and installed, and therefore suited for relatively inaccessible installations and emergency repairs.

  Timber or log crib walls have standard design heights up to 6.7 meters. This wall system has a rustic aesthetic value that makes it popular for use in locations such as parks, National forests, or primitive areas. It is also well suited for use on detours or for stage construction. When all of the wood members are pressure preservative treated, the service life of a timber wall is comparable to that of concrete or metal crib walls.

- **Slurry Walls.** Slurry walls are used when a wall is needed before the surrounding soil is excavated or where ground water is a problem. A trench is excavated for the wall and simultaneously filled with a bentonite or other type of slurry. The slurry restricts the ground water flow and holds the trench sides in place. This is followed by placement of reinforcing steel in the slurry-filled trench and then by placement of concrete by tremie or a concrete pump. After the concrete has cured, the excavation can proceed.

  When one of these walls is exposed to view, some form of facing (precast, cast-in-place, or shotcrete) will provide a more pleasing appearance. In general, slurry walls are designed as cantilever walls without footings. Tiebacks are compatible with this type of wall. Slurry walls are seldom used in transportation applications, other than large urban projects, due to their unique features and extremely high unit costs. Slurry walls are only applicable for retaining walls in cut situations.

- **Rock Walls.** Rock walls consist of stacked large rock, used primarily in cut sections where very good soil exists. These walls provide erosion protection and limited earth support. They are generally 5 meters or less in height for cut sections and less than 3 meters in fills.

- **Modular Precast Concrete Walls.** This wall system consists of precast, interlocking, reinforced concrete elements of varying size depending upon the application. Most of these wall systems are proprietary and are typically available and cost competitive on a regional basis. Each element is rectangular in shape . Once the units are in place and locked together, they are backfilled with free draining material.

  These wall systems have been constructed to heights of 18 meters, but are seldom competitive above 9 meters. Unlike metal crib walls, these walls are always used in conjunction with structural footings and require a deep foundation in marginal and poor soils. Wall designs over 12 meters in height, walls designed to support bridge abutments on spread footings, and walls designed to be installed in locations of excessive foundation settlement shall be approved by the geotechnical and structural staff before using.

  Modular precast concrete walls are easy to install and quickly placed. Exposed aggregate finishes or other surface textures can aesthetically enhance the wall face.

Cantilever Pile Walls. These walls include cantilever, sheet, anchored, or soldier pile walls. The walls consist of sheet or soldier piles made from concrete, steel, or timber; either driven or placed in drilled holes and backfilled. The walls commonly have concrete facing or timber lagging.

These walls are suitable where horizontal deformations are not critical, but are costly and become impractical at heights of 5 meters or more. The net wall cost is also significantly influenced where the embedded portion of the wall requires significant rock excavation.

In embankment sections, a cantilever pile wall may be an appropriate solution for roadway widening where design heights are relatively low. They are also practical for correction of slope instabilities depending on design height, loadings, and site conditions.

Anchored Walls. These walls are also referred to as tieback walls. Routine wall designs go up to heights of 15 meters. These walls are practical in cut sections where a wall is needed before the soil is excavated and are appropriate where cantilever walls are not cost effective. Anchored walls require a specialty contractor and are not suitable in certain soil types. These walls generally require some type of facial treatment for aesthetic purposes. These walls are commonly utilized in conjunction with temporary excavation support based on the need for deformation control and economics.

One advantage of a tieback wall is that it causes minimal disturbance to the soil behind the wall and to any structures resting on this soil. At a wall height of about 5 meters, the walls may become economical compared with cantilever construction. The number of tieback rows, spacing and loading is project specific. Tiebacks offer the advantage of construction confidence, since each tieback is tested beyond it's design load as the basis of acceptance. Geotechnical and structural expertise is essential for all wall designs of this type. Tieback walls can be built in a fill side situation. However, difficulties with construction of the fill over the ties, and control of the face deflections, must be considered in the design before using this wall type in fill side situations.

Mechanically Stabilized Earth (MSE) Walls. MSE walls consist of facing elements, metallic or polymeric reinforcing elements, and a cast in place or precast facing. Many of the available systems are proprietary. MSE walls offer cost-effective alternatives for fill-type retaining structures in the height range of 5 to 15 meters. MSE earth retaining systems work best used in embankment situations and will tolerate considerable magnitude of horizontal and vertical deformations.

The walls work on moderately poor foundation soils and are flexible enough to accommodate some settlement. Transitions in the foundation material along the base of the wall require special attention. These walls have considerable economic advantage for temporary applications and detours.

During construction, the proprietary wall company should be required to furnish the wall materials and/or arrange for their production. Periodic technical assistance is also usually available to the wall installation contractor at the project site.

Several types of MSE walls use a welded wire mesh, a polymer mesh, or fabric. Some examples of these types of MSE walls follow:

- **Welded Wire Walls.** Welded wire walls are a patented system marketed by the Hilfiker Retaining Wall Company. These walls use metallic welded wire mat units that serve as both the soil reinforcement and facing element.

- **Geotextile and Geogrid Walls.** Geotextile wall systems use geotextile for the soil reinforcement and can use a variety of facing elements depending on project requirements. They are not proprietary and can be designed in-house without infringing upon a patent. The face can remain exposed if the geotextile is treated to prevent decay from ultra-violet rays. Concrete panels, mortarless masonry, tar emulsion, or shotcrete coatings make good facing materials. Consider this type of wall for temporary wall installations.

  Geogrid walls use a high tensile strength plastic grid as the soil reinforcing element of the wall. The geogrid can be precast into concrete facing panels, can be used with precast segmental block facing elements as the wall is constructed, or attached to precast face panels after wall construction. Some wall facing details permit the construction of battered walls and walls which permit the development of vegetation (a "green wall"). All designs shall be approved by the geotechnical and structural staff. Geogrid walls are proprietary wall systems.

- **MSE Slopes.** The MSE Slopes use geogrid or geotextile for soil reinforcement. They may be used as alternatives for retaining walls in some situations. The MSE Slope is constructed similar to MSE Walls, except the slope does not have a structural facing and is designed using slope stability methods. MSE Structures with slopes between 70 and 90 degrees are classified as retaining walls and are designed using retaining wall design procedures. When applicable, MSE slopes will typically be more cost-effective than MSE walls.

- **Soil Nailing.** This type of wall uses grouted metal bars as soil reinforcement. Soil nailing is a cost-effective wall system suitable for use either as temporary shoring or for new wall construction in cut applications, grade separation, widening, and rehabilitation of existing retaining walls. The fundamental concept of soil nailing is to reinforce and strengthen the existing ground by installing closely spaced grouted steel bars, called "nails", into a slope or excavation as construction proceeds from the "top down". Similar to tieback walls, this top down construction technique offers the significant advantages of continuous support of the excavation (and adjacent structures if there are any), cost savings through elimination of the need for structural excavation and imported wall backfill (as for conventional gravity cut walls), and reduced environmental impact.

  The typical soil nail wall construction sequence includes a progressive repetition of 1 to 2-meter high vertical to near vertical excavation lifts, followed by installation of nails and application of a reinforced

shotcrete facing. The reinforced shotcrete facing stabilizes the excavation face between the nails. When required due to local instability of the excavation cut face, the order of nail and shotcrete installation can be reversed. On permanent walls, a cast-in-place concrete facing is usually constructed over the shotcrete facing.

The nails are typically grouted into predrilled holes. The nails are typically referred to as "passive" inclusions. The term "passive" means that the nails are not pre-tensioned, as are tiebacks, when they are installed. The nail bars are forced into tension as the ground deforms laterally in response to the loss of support caused by continued excavation. Therefore, lateral deformation of the ground immediately behind the top of wall is typically greater with a soil nail wall (typically 0.001 H to 0.004 H, where H = wall height), than with a tieback wall. Several alternatives are available where existing structures: 1) cannot tolerate such deformations; and 2) are located within a lateral distance of up to 1.5 times the wall height (H) behind the top of proposed wall. Either a tieback wall should be used, or 1 or 2 rows of tiebacks should be used in the upper part of the nailed wall in addition to the nails, to limit deformation.

In cases where either tiebacks or soil nails are appropriate, soil nails are typically more economical. This is due primarily to; 1) elimination of soldier piles, 2) faster construction, and 3) smaller equipment is required with soil nailing.

Soil nail walls cannot be used in all types of ground. For soil nail walls to be most economical, they should be constructed in ground that can stand unsupported on a vertical or steeply sloped cut of 1 to 2 meters, for at least one to two days. Soil nail walls are not suitable in loose cohesionless soils (eg. "caving" sands) or below the water table.

2. Contracting Procedures: The contract frequently will include end result specifications, furnishing only line diagrams, design criteria, and an estimate of wall area or other pay item unit. The contract may include all construction details for all acceptable alternative retaining wall systems, or it may include one or more complete designs and permit other contractor furnished designs. The Project Manager shall make this determination with input from the inter-disciplinary team and the Construction Engineer, considering the project size and the number of retaining walls involved.

Guidance on information needed by bidders is included in FHWA's Geotechnical Engineering Notebook, Geotechnical Guideline No. 2. The information needed by bidders includes the following detailed geometric information, subsurface investigation, structural requirements, and geotechnical design data:

Geometric:

- Beginning and ending wall stations
- Profile elevation of top of wall and roadway and cross-sections.
- Horizontal alignment.
- Construction details of appurtenances in the area.
- Right of way limits.
- Stage construction sequence and traffic control needs.
- Foundations elevations and locations of unsuitable materials.
- Estimated wall area.

Subsurface:
- Shear strength and consolidation properties of foundations materials.
- Shear strength and unit weight of backfill.

Structural and Geotechnical:
- Design life (minimum service life) - normally 75 years.
- Safety factors for overturning, sliding, and stability of temporary slopes.
- Allowable foundation bearing pressure and minimum embedment depths.
- Maximum tolerable differential settlement.
- MSE internal design requirements.
- External loads.
- Drainage requirements.
- Backfill requirements.
- Facing requirements.

In addition, the Notebook provides guidance on information and requirements which should be included in supplier prepared designs and plans.

The bid advertisement period shall be extended from 30 to 45 days, or longer, if the Project Manager determines projects with alternative bids and Contractor designed walls require additional bid preparation time.

One advantage of the development of the *FLH Guidelines for the Design of Retaining Wall Systems* is the reduction or elimination of the need to review and analyze complex proprietary wall systems under tight contractual time constraints. The Project Manager should insure that special contract requirements are included in projects which prohibit submission of value engineering change proposals (VECPs) which propose to change the basic wall system alternatives permitted. This restriction is possible since the use of the design guidelines insures that all suitable wall systems have been considered and are included in the contract. However, VECPs may be permitted on the components of the wall systems, such as facing and connection details.

The contract specifications shall identify the procedures for the FLH review of designs and working drawings submitted by the Contractor, similar to the bridge process for reviewing and approving falsework drawings. The information which will be required from the Contractor for review of wall submittals shall be specified in the contract, along with the amount of time required for FLH reviews. The contract should include provisions for additional time needed to permit the working drawings to be reviewed by the A&E firm which did the original design, if appropriate. The specifications shall define when the time count begins for both the review of initial submissions, and for subsequent reviews when changes are required. The contract shall specify the number of sets of drawings needed by FLH.

The pay unit for contractor designed alternative walls shall be identified. The impacts of alternative wall types on the units of measurement should be considered if a common measurement, such as wall face area is used. If alternative wall systems require different pay item measurements, alternative bid items shall be required. The contract shall include a method for adjustment of quantities for field changes if a lump sum payment is used.

Specifications: All wall systems permitted as alternatives shall have construction and materials specifications available to the designers. Construction and materials specifications are referenced or included in the FP-96 of the *Guidelines for the Design of Retaining Wall Systems* for all wall systems which may be considered for use on FLH projects. The applicable portions of these specifications shall be included as part of contracts for all wall systems which do not have specifications covered in the latest FP.

Review Procedures: The Construction Operations Engineer (COE) shall be responsible for initiating the review of Contractor designed retaining wall systems and working drawings. The working drawings will normally be reviewed by the Geotechnical Engineer for MSE systems, and by the Structural Engineer for tie-back and cantilever systems. The Geotechnical Engineer will be the lead for all wall system reviews. The Geotechnical Engineer will insure the approval is made within the time limits specified in the contract, and shall keep the COE informed of the status of the review. Any communications which must pass directly between these reviewers and the Contractor shall be documented and provided to the COE.

3. Consideration of New Retaining Wall Systems: The FLHO shall keep a current list of retaining wall systems which may be considered for use on FLH projects. This list shall be for general guidance of designers in determining retaining wall systems which may be considered for use on FLH projects, and is not a blanket endorsement of the retaining wall system.

The retaining wall system review process will identify the general design concepts used, and will determine if these concepts are acceptable for use on FLH projects, or if they must be modified to be acceptable. Also, the wall system review will determine the availability, durability, and constructability of new systems. In addition to possible modifications to the supplier's design process, the review shall generate any materials and construction specifications needed for inclusion in the *Guidelines for Design of Retaining Wall Systems*. Finally the review process will determine any limitations in the use of the system, such as maximum wall heights, and special materials or construction requirements.

FLHO will not directly solicit data from suppliers and manufactures to determine if newly developed wall systems are acceptable. Periodically the FLHO will solicit information from selected partner agencies (state,federal, and professional engineering organizations) concerning their evaluation and approval of wall systems. The FLHO will review the partner agencies design approval process and will adopt those wall types which meet *Guidelines for Design of Retaining Wall Systems*, and other criteria specified below. FLHO, working with the divisions, will update the list as new walls are determined to be acceptable for use on FLH projects.

Information which shall be requested from Partner agencies includes:

- Size and capacity of the supplier.
- Geographical availability of the system.
- Theoretical basis for the design, including when and how the theory was developed.
- Practical basis for the evaluation of the design by FLH Engineers, including any design manuals, charts, or software needed for the design.
- Laboratory and field experiments which support the theory.
- Practical applications with descriptions and photos.
- Limitations and disadvantages of the system.

- List of owner agencies using the system, including contact names, addresses, and phone numbers. The list shall include documentation that the system has a successful "track record" of several installations. The actual number of successful installations required will depend on the FLH reviewers' concerns, but normally will be between 2 and 10 installations.

- Details of wall elements, analysis of structural elements, design calculations, factors of safety, estimated life, corrosion design procedure for soil reinforcing elements, procedure for field and laboratory evaluation including instrumentation, and special requirements, if any.

- Sample material and construction control specifications showing materials type, quality, certifications, field testing, acceptance and rejection criteria, and placement procedures.

- A well documented field construction manual describing in detail, with illustrations where necessary, the step by step construction sequence.

- Typical unit costs supported by data from several actual projects.

- A certification of the product and procedure by an independent Professional Engineer.

- Types of architectural facing treatments available or possible.

Normally the Division Geotechnical Engineers will be responsible for coordinating the review. The principle reviewer shall determine if the system warrants further review. The reviewer shall insure all information needed from the above list has been provided.

The principle reviewer shall determine if additional reviews by Geotechnical Engineers, Bridge Engineers, and other technical expert within FLH, the FHWA, or outside consultant firms are needed.

Much of the information requested from the suppliers is needed to determine the acceptance of the design procedure. However, some of the data is to permit the reviewers to develop additional information for designers and Project Managers:

Constructability
Versatility/suitability for varying site conditions
Suitability for Architectural Facing
Limitations on usage (Maximum Fill Heights, etc.)

The principle reviewer shall send copies of the review package they determine to be acceptable to FLHO and the other FLH divisions for concurrence. All retaining wall systems considered for use on FLH projects shall be included in the *Guidelines for Design of Retaining Wall Systems*. A new retaining wall system shall not be added to the list until all design guidelines, wall system limitations, and materials and construction specifications have been developed and approved for inclusion.

E. Drainage Design. Drainage facilities convey both normal surface and subsurface waters (and within reasonable limits, expected flood and storm waters) across along, or away from a highway. The designer considers the most cost efficient and practical manner to do this without undue damage to the highway, the drainage facility, or adjacent stream channels and property. Various types of drainage methods will accomplish this, including the use of open channels, riprap and channel lining, bridges, culverts, storm drains, underdrains, and related appurtenances. Some installations require provisions for fish passage.

Chapter 7, Hydrology/Hydraulics, contains information, references and methods for designing drainage facilities.

The designer shall include all of the drainage facilities in the contract plans and make certain the specifications contain provisions for these facilities.

The designer is responsible for the design of drainage facilities and for submitting requests and data to the hydraulics engineer, the bridge unit, and the geotechnical unit. The designer normally designs all minor drainage structures and appurtenances, such as small culverts (1200 millimeters and smaller), end sections, catch basins, and inlets as well as minor drainage channels and ditches.

Large culverts and channels are usually sized by the hydraulic engineer or by the designer with the assistance of the hydraulic engineer.

Bridge design (layout, minimum opening under bridge, pier placement, etc.) is the co-responsibility of the bridge unit and the hydraulics engineer.

The geotechnical unit is responsible for specialized design of underdrains, horizontal drains, drainage blankets, and subdrainage systems using geotextile fabrics. They are also responsible for obtaining pH values of soils and waters and for determining foundation materials for bridges and large culvert installations.

Refer to Chapter 7, Section 7.1 to determine responsibilities of drainage design.

The designer shall furnish lines, grades, cross sections, detail maps, and vicinity maps to the hydraulics engineer and the bridge and geotechnical unit for design.

The designer often adjusts grades (and lines) to provide adequate cover for culverts, minimum clearance under bridges, or for other constraints imposed by drainage facility designs performed by others.

Early in the design process, the designer should consult with the hydraulics engineer, the bridge unit, and the geotechnical unit where any special needs are foreseen. Also, early in the design process, the designer should discuss the need for various Federal, State, and local permits and approvals with the hydraulics engineer.

The designer must review the environmental documents and correspondence with fish and wildlife agencies and review all permits to ensure that all drainage requirements are in the contract.

The hydraulics engineer or the bridge unit designs the larger and more complicated drainage facilities. However, the designer must have familiarity with the design principles and methods to supply adequate information so others can design these facilities. The designer should know the minimum vertical dimensions of structures to adjust the highway grade, and should be aware of alternative designs that could affect the line and grade of a highway.

To design any drainage facility, the quantity of flow that the facility must pass has to be determined. Various methods as explained in Section 7.4.A.1, Floods, will accomplish this. This quantity of flow or discharge is designated by the letter "Q" in hydraulic equations and charts. The discharge is the number of cubic meters per second (m^3/s) of water flowing into or out of a drainage facility or a segment of the facility. (See Section 7.4.B.)

1. Channels and Ditches. (See Section 7.4.C, Open Channels). Drainage channels, other than normal roadway cut ditches and channel changes of streams generally require a design by the hydraulics engineer when the discharge is significant. The designer shall furnish approximate lines and grades, existing site conditions, and cross sections for the channel design. Include provisions for fish habitat and aesthetics in the design. Good fish habitat includes pools, riffles, boulders, logs and gravels in the stream bed, and brush and shade on the stream banks. In order to design channel changes properly, the hydraulics engineer needs to know which features to include. The designer shall include typical sections and detailed drawings of drainage channels and channel changes in the plans.

Roadway cut ditches shall meet AASHTO, State, or county minimums for depth requirements and foreslopes. The minimum depth should be 150 millimeters below the subgrade shoulder. Cut ditches serve two primary purposes:

(1) To keep the ground water level below the subgrade.

(2) To drain surface runoff and small streams into culverts and cross drains.

The amount of water the ditch can carry and the depth of flow vary with the grade of the ditch line. On very flat grades, the water may not drain fast enough to prevent saturation of the subgrade. This situation may cause pavement failures. The designer can alleviate this problem by using deeper or flat bottom ditches, steepening the ditch grade, decreasing the distance between cross drains, paving the ditch, or using slotted drains. Give first consideration to the ditch grade. Use a minimum ditch grade of 0.5 percent. Consider special design for grade lines of ditches on long crest and sag vertical curves and in superelevation transition areas where ditch grades may be flat for substantial lengths.

In soils subject to erosion, consider lining the ditches with rock or some other suitable material especially on grades steeper than 3 percent. Consult the hydraulics engineer when ditch erosion is a possibility. (See Section 7.4.H.)

2. Culverts. (see Section 7.4.D.). For design purposes, there are two categories of culverts:

Category (1) - Minimum sized culverts used for cross drains to carry off intermittent roadside ditch water or water from very small drainage areas.

Category (2) - Culverts sized to carry perennial streams and large runoffs.

Category (1) culverts normally range in size from 300 to 600 millimeters in diameter. The design of these culverts consists of locating them on the cross sections, determining the end treatment (beveled ends, end sections, catch basin, etc.), establishing grades, cover, structural excavation, and showing the locations on the plans.

Category (2) culverts require hydraulic design procedures to determine size. The sizing of these culverts is either done by or checked by the hydraulics engineer.

The designer locates the culverts on the detail map and produces plotted cross sections to determine the length of culvert invert, inlet and outlet elevations, and available depth for headwater. After sizing the culverts, determine the maximum cover of fill over the culverts and calculate the structural excavation.

To locate culverts for a project, obtain a plot of the ditch profile and study the cross sections and the detail map. Streams crossing the alignment, draws, and low spots in fills and ditch lines are the obvious sites for culverts. In long cut sections between the obvious culvert sites, space the cross drains so water does not build up in the ditch line and infiltrate the subgrade or cause erosion problems. There is no set rule for minimum spacing between cross drains because of various types of soil encountered and the wide differences in rainfall in different geographical areas. Consult with the hydraulics engineer on a project-by-project basis for minimum spacing of culverts.

After locating the culverts on plotted cross sections and determining the maximum cover, prepare a drainage summary sheet for the plans. The maximum cover of each culvert determines the culvert wall thickness for alternative metal culvert pipe materials and corrugations or the reinforcement class for concrete alternatives. Select the wall thicknesses and reinforcement classes from the standard drawings.
Any required or optional special coatings on metal pipes shall be shown in the contract. (See Section 7.4.D.15 for details.)

3. Downdrains and Pipe Anchors. Downdrains work well in high fills. Their use may prevent the excessive excavation required to install a new culvert at the bottom of an existing fill. Also consider downdrains where the outfall of a culvert will be on erodible soils. Pipe anchors should be specified for all above ground downdrain installations. Buried downdrains may require an anchoring system depending upon specific site conditions. For tongue and groove concrete pipe, use concrete anchor blocks on grades steeper than 10 percent. For bell and spigot concrete pipe and metal pipe culverts on grades steeper than 30 percent, use pipe anchors as detailed on approved standard drawing.

When specifying pipe anchors for a project, list them on the drainage summary.

4. Catch Basins and Inlets. (See Section 7.4.E., Roadway Drainage). Catch basins and inlets are generally associated with curb and gutter sections, storm drains, depressed medians, and ends of bridges. They may also be used as a safety measure in roadway ditch lines. In this case, maintain the normal ditch depth at a culvert inlet and provide a traversable grate at the top of the catch basin or inlet.

In curb and gutter sections, space the catch basins and inlets close enough together so water will not spread on the traveled way and create a traffic hazard. Spacing will depend on the gutter grade and cross slope of the road or gutter. Consult with the hydraulics engineer on spacing requirements.

At the lower ends of bridges, design catch basins or inlets to prevent runoff from the bridge gutters eroding the fill slopes at the corners of a bridge.

At culvert inlets, determine the need for catch basins on an individual basis. However, they serve no purpose if slides and siltation will plug them.

5. Storm Drains/Storm Sewers. (See Section 7.4.E, Roadway Drainage). Storm drain systems and urban drainage systems require design by or in consultation with the hydraulics engineer. The designer shall furnish layouts, lines and grades, and culture and land features for each drainage area. The designer shall include detailed drawings of the system in the plans.

6. Underdrains and Horizontal Drains. The geotechnical section should design underdrain systems and horizontal drains based on field observations and exploration of subsurface conditions. The designer will have to incorporate them in the plans and provide detailed drawings for their construction.

7. Riprap. (See Section 7.4.C.3, Channel Stabilization). The Hydraulics engineer determines the class, thickness, and cross section of riprap for slope protection along streams and lakes and for ditch and channel lining. The roadway designer incorporates the data in the plans. The class, thickness, and typical section must show in the plans and specifications.

Place riprap around culvert inlets and outlets to prevent erosion and undercutting.

8. Energy Dissipators and Outlet Basins. (See Section 7.4.D.10). In areas of erodible soils, consider energy dissipators at the outlet of downdrains and culverts with high outlet velocities and in channels at points where the grade flattens. Energy dissipators may be in the form of riprap outlet basins, stilling wells, weirs, or concrete structures.

9. Erosion Control. (See Section 7.4.H). Determine the need for various items of erosion control and include the items in the contract. The type and extent of erosion control measures will depend mostly on the soils and streams on a project.

F. Other Design Elements. Many components go into the preparation of a completed design for a proposed highway facility. This section will establish basic guidelines and direction for the many elements not already covered but essential to complete the design package. Such elements include culverts, catch basins, curbs, gutters, sidewalks, special ditches and channels, slope protection, erosion control, cattleguards, fencing, etc.

1. Highway Lighting. The purpose of highway lighting is to provide illumination for an orderly flow of traffic and to improve road safety during the hours of darkness. Properly designed and maintained fixed roadway lighting allows the motorist and pedestrian to quickly, accurately, and comfortably recognize all significant details in the traffic occupied space.

This section provides warrants, standards, and other information on highway lighting installations. An engineer experienced in lighting design should review all highway lighting designs. Generally, the maintaining agency should be contacted to ensure compatibility in lighting hardware and components.

a. Warrants. Lighting warrants relate to the need for roadway lighting and the benefits derived. Factors such as traffic volume, speed, nighttime road use, night accident rate, road geometrics, and general night visibility are important when considering highway lighting. Economic returns for lighting are measurable by the reduction in personal injuries, fatalities, property damage, and other societal costs. More effective usage of the road and the possible increase in its capacity also affect the warrants.

Roadway lighting is warranted for the following:

- Urban expressways and arterials, urban collectors having ADT (20) exceeding 5000, and urban intersections having a combined ADT (20) exceeding 10 000.

- Rural interchanges and intersections where the average number of nighttime accidents (N) per year exceeds the number of daytime accidents (D) per year divided by three. (Illuminate when N is greater than D/3).

- Major rest areas located near urban areas or located near available power sources.

- Tunnels where driver's visibility requirements (or needs) during daylight hours require illumination and where the approach roads to tunnels are lighted.

- Pedestrian underpasses and highway underpasses used by pedestrians.

- Underpasses on lighted highways.

- Overhead signs along urban expressways and arterials; and overhead signs at interchanges on roads approaching urban areas.

b. Design Values. FHWA's Roadway Lighting Handbook gives the levels of average maintained horizontal illuminance and uniformity of illuminance, as well as levels of average maintained luminance and uniformities of luminance for various classes of roadways.

(1) Urban Intersections. Illuminate intersections of arterials and collector roads with other roads in urban areas to a level equal to the sum of the illuminance levels of the intersecting roadways. If only one of the intersecting roads has lights, the intersection requires lighting to a level at least 40 percent higher than the lighted roadway.

(2) Rural Intersections. Where warranted, illuminate rural intersections to provide visibility of other traffic and physical features that are potential collision objects. Place a minimum of two luminaries, and preferably four, per intersection. Maintained average illuminance of the roadway between luminaries shall be 10 to 12 lux with a maintained minimum between luminaries not less than 3 lux.

(3) Overhead Signs. The level of lighting required for easy recognition and good legibility of overhead signs depends on the ambient luminance behind the sign. There is no approved method for determining ambient luminance.

The following explanations of low, medium, and high ambient luminance apply in selecting the recommended design range of average maintained illuminance levels for signs.

- Low Ambient Luminance. Rural areas with no lighting or with very low levels of lighting. This would include background of mountains, deserts, fields, trees, and rural roads.

- Medium Ambient Luminance. Urban areas with small commercial developments, lighted roadways, and lighted intersections.

- High Ambient Luminance. Areas with high street lighting levels, and brightly lighted advertising signs. An expressway through or adjacent to a highly developed downtown area could experience high ambient luminance.

When warranted, illuminate overhead signs to the following levels of average maintained illuminance:

Ambient Background Luminance	Sign Illuminance (lux)
Low	100-200
Medium	200-400
High	400-800

Maintain a minimum to maximum uniformity ratio of 1:6 over the entire sign surface.

While the recommended values will provide good sign recognition and legibility for painted or enameled sign surfaces, the highly retroreflective sign materials require special care. In this case use luminaries especially designed for these materials, and strictly follow manufacturer's installation recommendations. In addition, a field test of such equipment before accepting it for construction is desirable.

(4) Rest Areas/Parking Lots. Rest area lighting installations shall not adversely affect the vision (by glare or spill light from the rest area) of traveling motorists along the main roadway. Motorists on the highway passing the adjacent rest area should be able to discern any vehicle leaving the rest area as well as the traffic traveling along the main roadway.

Recommended average maintained horizontal illuminance levels and uniformities of illuminance are as follows:

Entrance and Exit Gores and Interior Roadways	6-10 lux	G_1 = 1:3
Parking and Activity Areas	12-16 lux	G_1 = 1:3

(5) Tunnels. Daytime tunnel lighting assists the driver's eyes to adjust from high levels of luminance outside the tunnel to a low level of luminance inside the tunnel. Drivers' eyes adapted to high outside ambient luminances will not see obstacles just inside the tunnel unless the tunnel is very short and straight. When approaching a very short and straight tunnel, vehicles and other objects show in silhouette against the light of the exit portals. Such tunnels normally need no daytime lighting.

Tunnels are classified as short or long. A short tunnel has a portal to portal length equal to or less than the minimum stopping sight distance for vehicle operating speeds within the tunnel. A long tunnel has a portal to portal length greater than the minimum stopping sight distance.

A tunnel zone is a length of tunnel roadway equal to the minimum stopping sight distance. A short tunnel will have one tunnel zone and a long tunnel will have two or more. The first tunnel zone in from the entrance portal defines the entrance zone.

The visibility within this entrance zone shall be adequate so motorists can recognize vehicles and objects on the tunnel roadway while the driver is still outside the portal entrance. Adequate visibility occurs when the luminance level is at least seven to ten percent of the ambient luminance outside the entrance portal. This ratio applies only to the luminance or brightness level the motorist observes in the entrance zone. The ambient brightness outside the portal will depend upon the sun's path and the surrounding entrance environment.

Although the sun may produce illuminance levels exceeding 100 000 lux on the earth's surface on a clear day, the entrance zone is not automatically illuminated to 10 000 lux to meet the ten percent criterion. Evaluate the actual approach roadway and entrance portal and determine the correct ambient brightness and the anticipated degree of eye adaptation. On facilities not yet constructed, use model simulation to duplicate the anticipated tunnel approach conditions.

The driver's field of view of the adapted brightness shall be evaluated at a location along the approach roadway equal to the minimum stopping sight distance in advance of the entrance portal. Design the entrance zone lighting levels for the highest ambient brightness expected at the location.

For a short tunnel, continue the entrance zone lighting level throughout its entire length. However, lighting beyond the minimum stopping sight distance in long tunnels must be progressively reduced to an established minimum level. Beginning at the end of the entrance zone lighting, reduce the levels by steps to not less than seven to ten percent the previous higher level. Minimum daytime levels in long tunnels should not be less than 50 horizontal average maintained lux on the roadways. Each stepped zone should have a length at least equal to the minimum stopping sight distance.

Since visual adaptation from low to high luminance levels presents no problem, special exit portal lighting is not required unless there is traffic reversal or two-way traffic in one tube of a two-tube tunnel. Such cases justify the installation of symmetrical lighting systems at both ends of the tunnel.

Nighttime illuminance levels and uniformities of tunnels shall be about equal to those on adjacent roadways. If, because of mounting height and spacing restrictions, these recommended uniformities are not achievable, exceed the recommended illumination levels somewhat to meet the uniformity requirements. Such increased illumination levels, however, should not exceed twice those recommended for the adjacent roadways.

(6) Underpasses. An underpass is defined as a portion of a roadway extending through and beneath some natural or manmade structure, and having a length to height ratio not exceeding 10:1. Because of its limited length to height ratio, it will not, under normal conditions, require supplementary daytime illumination.

Nighttime illumination levels and uniformities applying to tunnels also apply to underpasses. If warranted, underpasses located on unlighted roadways are lighted to the minimum levels recommended for the roadway types adjacent to such underpasses.

(7) Bridges. When bridges are a part of a lighted highway or roadway, illuminate them to at least the same levels and uniformities as the adjacent highways or roadways. Under normal conditions, do not light individual bridges on unlighted roads. When lighting is required, use overhead luminaries. Luminaries located at ground level or in the railing (parapet lighting) make it difficult to achieve and maintain the required lighting levels and uniformities.

Poles, luminaries, and lamps mounted on bridge structures are subject to more severe vibration than those located on conventional roadways. Take precautions to minimize luminaire and lamp damage of such installations. This requires special resilient pads inserted between pole base and foundation, a spring loaded lamp holder located opposite the lamp socket to provide two-point lamp support, etc.

Luminaries shall be shielded to minimize glare emitted toward motorists using roads located near and below the illuminated bridge. Such shielding may be especially desirable on bridges crossing navigated waterways. For complex and/or multilevel bridge structures, consider high mast lighting.

c. Lamps and Luminaries. Lamps and luminaries shall be standardized to provide the most economical roadway lighting. Standardization also reduces inventories and simplifies design and procurement of materials for maintenance and repair work. Coordinate with the maintaining agency to verify lamp type selection.

(1) Lamps. Generally all highway lighting, including the lighting of overhead signs, shall use high pressure sodium lamps. There are situations, however, that make the spectral energy distribution (color) of this light source unacceptable. For such exceptions, use metal halide lamps.

All lamps shall be first-line, high-quality products. The outer envelopes shall be heat-resistant glass. The structural design of the arc-tube support shall be suitable to withstand the mechanical vibrations expected during a lamp's normal life cycle without moving or damaging the arc-tube.

(2) Luminaries. A luminaire is a complete lighting device, less lamp, consisting of a housing, support clamps, or a fitter for attachment to the support structure, reflector, refractor or lens (as specified), lamp socket, terminal block, lightning arrester (when specified), an integral or external ballast (as specified), and an integral photo control receptacle (as specified). The luminaire shall be capable of operating the specified lamp at the line voltage specified in a completely sealed optical system. The seal of the optical system shall be of such design and materials as to minimize entry of dirt, dust, sand, and other contaminants into the optical cavity. The luminaire, including all its electrical components, shall be capable of operating satisfactorily at ambient temperatures covering the range from -5°C to +55°C.

To keep glare to an absolute minimum, use luminaries meeting the Cutoff type Vertical flux distribution (per ANSI/IES RP-8, 1983). "Semicutoff" type luminaries may, under certain conditions, be allowable. Do not use "Noncutoff" type luminaries.

d. Pole Location. The primary consideration in locating light poles is safety. The designer shall minimize the hazards of these poles by reducing their number, increasing the offset distance, locating them behind barriers, installing frangible or slip base supports, and installing poles in areas with low incidence of vehicles leaving the road.

Use higher lumen output lamps at greater mounting heights to reduce the number of poles. Use high mast lighting on very wide multilane facilities and at interchanges.

If at all possible, install the lighting system in the median. This results in a reduced number of poles, only one run of electrical conductors, and usually better use of the light emitted by the luminaries compared to a lighting system installed on both outside edges of the roadway. If the median is wide, use a breakaway or yielding pole located in the center of the median. A wide median width is greater than twice the pole offset (distance between outside edge of pavement and property line) of an installation along the outside edge of the road. Since most medians on urban freeways are narrow and provided with a barrier, it is often possible to locate the poles on or within these barriers, provided that the following is true:

- The barrier is rigid and considered unmountable by passenger vehicles.
- The barrier is semirigid with enough clearance between barrier and pole to permit deflection.
- The barrier is semirigid but stiffened in the vicinity of the pole to increase beam action and reduce vehicle pocketing.
- Sufficient space is available for safe and proper maintenance of the lighting equipment.

Existing utility poles may be used for attaching luminaire's mast arms. If the highway is in a depressed section having retaining walls, the mast arms may also be attached to these walls.

Increasing the pole offset distance from the traveled way reduces the hazards of light poles. It is desirable to have luminaries positioned over the outside traveled lane and, as a minimum, positioned over the shoulder.

The offset will depend upon the lengths of standard mast arms. Do not use nonstandard mast arms.
Locate light poles without breakaway bases and high masts outside the clear zone. If high mast poles are designed within this zone, install crash barriers (impact attenuators) around them.

Conventional poles located within the clear zone shall have frangible or slip bases unless falling poles would create greater hazards.

The hazard of light poles can be further reduced by placing them outside of ramp gore areas and on the inside instead of the outside of curves.

Require frangible or slip base poles in the clear zone and in medians (12 meters or wider) or along the outside of the traveled way.

Frangible bases are not appropriate on poles located along sidewalks or other locations where they could fall into heavily traveled roads, on pedestrians, or where a falling pole would create a greater hazard. This is especially applicable to those poles located on narrow sidewalks separating frontage roads form the main roadway.

Select pole locations so the luminaire's brightness will not produce excessive glare in the driver's view or cause reflected glare on adjacent overhead signs.

2. Fencing. Fence is usually installed to protect a highway facility from unsafe encroachment by pedestrians, livestock, etc. Generally, fencing replaces existing fence, and is usually constructed on the right-of-way (R/W) line through private lands. Some states have laws requiring fence for all State R/W. The designer needs to check the applicable regulations during the design process. The type of fencing and its location shall agree with the R/W documents or be agreed to during the plan-in-hand or other reviews of the project.

When the R/W line has many abrupt irregularities over short distances, fencing runs should have continuous alignment. This means some R/W corners or monuments will remain outside the fence line. Fencing on a continuous alignment has a cleaner appearance and is more economical to construct. In rural areas, the designer should contact the property owners to determine locations for the fence line. In many instances, the landowner will request a fence outside the R/W line for ease of maintenance. Attempt to hold the number of fence types to a minimum on any particular project for convenience of construction.

Chain-link fence may be warranted for the following:

- Through industrial areas.
- At residential developments.
- Through military reservations.
- At schools and colleges.
- At recreational and athletic areas.
- At other locations where maximum protection to prevent encroachment on the right-of-way is necessary.

Generally, an 1800 millimeter high chain link fence provides protection from encroachments. Sometimes a 1200 millimeter height is adequate if conditions are noncritical.

Wire fencing warrants apply in all rural areas and in some suburban and urban cases. The fencing may consist of barbed wire, hog wire, and other types of metal fabric.

The height of fence can be variable depending on the primary purpose of the fence, such as controlling cattle, sheep, wild animals, etc. Some wire fencing can be 2 to 3 meters high when used to control elk and deer. In some western states, the clear distance from the ground to the first wire is important for antelope crossings. Metal right-of-way fencing can interfere with airport traffic control radar. When fencing in the vicinity of an airport, review the FAA permit to determine if the fencing will create radar interference. An alternate type of fencing may be appropriate in this case.

Some projects require lograil, jackrail, and other types of wood fences on projects for aesthetic and other reasons. Examples of these types of fences can usually be found in Division office files.

It is not unusual to require fencing at stockpile sites, borrow sites, and ponded areas. In such cases the degree and type of fencing depends on the requirements of each site.

Fence measurement is taken along the slope of the fence. The design quantities should reflect this measurement.

Provide gates, when required, at the locations stated in the right-of-way agreements or as agreed to during the plan-in-hand review of the project. The type and size of gates shall be shown on the plans.

3. Cattleguards. Cattleguard substructures shall be concrete, timber or steel. The width and type shall agree with the R/W document or be agreed to during the plan-in-hand review of the project.

Cattleguard widths should be shoulder to shoulder or traveled way widths plus 2.4 meters, whichever is greater.

4. Pedestrian Facilities. Pedestrian facilities consist of sidewalks, hiking or walking trails, and pedestrian separation structures. Sidewalks are generally located immediately adjacent to the highway or parking area. Walking and hiking trails are independently aligned and usually serve recreational activities such as paths from parking areas to scenic overlooks. Pedestrian separation structures are not discussed here. Pages 389 to 399 in the Green Book cover pedestrian structures.

a. Sidewalks. Sidewalks shall have all-weather surfaces. Provide sidewalks along both sides of urban area highways when there is a need for pedestrian access to schools, parks, commercial areas, and transit stops. In suburban residential areas, provide a sidewalk on at least one side of the highway and locate it close to the right-of-way line, if possible.

In lightly populated suburban areas and in rural areas, consider sidewalks only at points of community development such as schools, businesses, industrial plants, and transit stops.

In urban and in major residential areas, sidewalks are usually raised. In many suburban and most rural areas, pedestrians use the roadway shoulder. Sidewalks in residential areas shall have a minimum width of 1.2 meters. To provide a planting strip between the sidewalk and curb allow a minimum of 0.6 meters. When constructing a sidewalk adjacent to the curb, widen the sidewalk 0.6 meters to accommodate open doors of parked vehicles.

Sidewalks in areas of high pedestrian traffic such as schools, businesses, industrial areas, and transit stops should be wider than the minimum and paved to the curb in most cases.

Raised sidewalks should slope toward the roadway at 2 percent.

In most cases where pedestrians use the roadway shoulder for walkways, there are no markings or signs for pedestrian use. In areas of known heavy pedestrian use, an additional 1.2 meters of shoulder width will satisfy the purposes of a sidewalk. An 200 millimeter solid white stripe should mark the edge of the traveled way at these locations.

Pedestrian crosswalks are regularly marked in urban areas. In residential and rural areas, marked crosswalks are normally not necessary. In the vicinity of schools, convalescent centers, local parks, or community centers, marked crosswalks may alert vehicle operators of an unusual situation. For additional details see MUTCD and Traffic Control Handbook.

All sidewalk designs shall accommodate persons with disabilities.

b. Walking and Hiking Trails. These pedestrian facilities usually provide connections with existing trails, lead to roadside points of interest, allow access to streams, or permit leisurely walks. They often have a natural surface, except high use locations require paving to protect existing environmental conditions.

The following guides for walking and hiking trails apply when persons with disabilities do not require accommodations.

- The clear area around walking and hiking trails should be 2.4 meters laterally and 3 meters vertically. Any trees or brush removed from this area shall be flush cut at ground level and intruding branches trimmed flush with the tree trunk.

- Walking trails should be a minimum of 1.2 meters wide and have a maximum grade of 10 percent. The trail should have independent horizontal and vertical alignment. Always locate a trail outside the clear recovery zone or behind guardrail when it parallels the main roadway.

- Hiking trails should have a minimum surface width of 0.6 meters and a maximum sustained grade of 10 percent. The grade may be up to 20 percent for short distances. A hiking trail constructed in a riprap slope, talus slide, or other rock slope should have all voids filled at least 600 millimeters below the rock surface. Provide a 75 millimeter cover of soil or small rock for a final surface.

c. Bicycle Trails. Consider bikeways in the overall design of a highway when bicycles would interfere with or jeopardize the safety characteristics of the highways. See 23 CFR 652. The AASHTO publication Guide for Development of Bicycle Facilities provides the criteria for the design of bikeways.

5. Parking Areas. On FLH projects, parking areas are most often constructed for the scenic, recreational, and cultural enhancement of the highway facility. Parking area design is coordinated with the client agency to determine geometrics, capacity, design vehicle type, and other related requirements. Special design considerations are necessary to accommodate recreational vehicles at intersections within the parking area to provide safe traffic movement. Parking areas shall be designed to accommodate persons with disabilities.

The basic design for parking areas can be found on pages 54 and 55 in the FHWA publication Safety Rest Area Planning, Location, and Design.

6. Accommodation of the Disabled. The *Americans with Disabilities Act (ADA) Accessibility Guidelines* contains most of the applicable standards. The Green Book contains information on curb-cuts beginning on page 393.

The following accessibility requirements apply to the design of parking areas and loading zones:

- Parking spaces for disabled persons and accessible passenger loading zones shall be the spaces or zones located closest to the nearest accessible entrance on an accessible route.

- Parking spaces for disabled persons shall be at least 2.4 meters wide and shall have an adjacent access aisle at least 1.5 meters wide. Parking access aisles shall be part of an accessible route to the facility and shall comply with width and slope requirements for accessible routes.

- Accessible routes shall have a minimum width of 0.9 meters and no running slope greater than 5 percent.

- Parking spaces and access aisles shall be level with surface slopes not exceeding 2 percent in all directions.

- The surface of all accessible routes shall be stable, firm, and slip resistant.

- Changes in the level of accessibility lanes up to 6 millimeters may be vertical and do not require edge treatment.

- Changes in level between 6 millimeters and 12 millimeters shall be beveled with a slope no greater than 1:2. Changes in level greater than 12 millimeters require a bevel at the slope of 1:12.

- Parking spaces shall be reserved for the disabled by a sign showing the symbol of accessibility. The signs must be visible, even when a vehicle is parked in the space.

7. Landscaping and Roadside Development. AASHTO defines roadside development as follows:

The treatment given to the roadside to conserve, enhance, and effectively display the natural beauty of the landscape through which the highway passes.

Throughout the manual, there are references to aesthetic considerations for incorporation into the final design. Aesthetic consideration is not something added onto the project at the last moment to make it look good. Owner agency input at an early stage is vital toward ensuring that all environmental concerns are satisfactorily incorporated into the final design.

Consider the highway as an essential element of the total environment, not as a separate entity apart from or in conflict with the environment. All highway-oriented disciplines should collaborate at all stages of the corridor selection, location, and design. Only in this manner will the functional aspects of highway geometrics be an integral part of the aesthetic quality as it relates to the highway user and the immediate environs.

Employing as many of the following landscaping treatments as possible into the final design will enhance and emphasize the natural beauty of the roadside.

a. Landscape Treatment. In a rural environment, the most successful treatment is one that imitates the existing landscape elements. A motorist going 80 km/h is not going to see detailed landscape patterns. In parking areas, such as overlooks or vistas (and in some cases areas of slower moving traffic), a more concentrated effort is desirable to properly relate landscape details to the viewer.

The best landscape approach is one intended to completely eliminate change points by modifying vegetation clearing lines, cut slope lines, and even ditch lines. Blend all treatments with existing or planted features to simulate natural forms.

The extent of landscape treatment will vary according to the amount of landscape manipulation and area visibility. The most visible areas should receive the greatest attention. Suggested possible treatments for these sites are plantings, slope molding, and rock cut sculpturing, etc.

To achieve the necessary blending, concentrate much of the landscaping effort near the base of the fill and the top of the cut lines. When planting larger trees, specify them to be placed near the top of the cut slopes or the toe of the fill. Keep them beyond the clear zone and, if required, beyond the snow storage area in snow plowing areas.

On the higher speed rural roadways, plant groupings of one or two tree species can provide adequate treatment. More species diversity along with appropriate groundcover shrubbery is typical in urban planting situations.

b. Earthwork. Design cut and fill slopes not only to satisfy slope stability and balance material quantities but also to improve the appearance of the final project.

Use variable slope ratios for both cut and fill slopes. Avoid using constant slope ratios. The use of slope rounding at the top of cuts is commonplace. Round the ends of cuts and blend the ends of fills into the cut slopes. See Figure 9-10.

When practical, include in the design some slope molding techniques to imitate the existing landscaping elements. Slope molding goes beyond variable slope and rounding concepts. With slope molding, a deliberate attempt is made to break up the uniformity of a finished slope.

On long cut slope faces, lay back the draws and accent the ridges. Warp slopes around existing large boulders and rock outcrops.

In areas of natural draws, lay back or flatten the cut slope to match that of the draw. This only generates a small amount of additional material and greatly enhances the appearance of the cut slope. This material can be used to flatten fill slopes or mold then into natural land forms common to the project area.

Accent ridges by steepening the slopes and rounding to the maximum extent practicable. Naturally, stable slopes are a basic consideration on any slope treatment so the steepening should not exceed geotechnical recommendations.

On large cuts, the lay back the draws and accent the ridges technique may not work. The use of false draws and ridges to break up the slopes may be required, although this technique could cause a substantial increase in the roadway excavation unless the material is stable at relatively steep slopes.

c. Rock Work. On many projects with long, high rock slopes, the cooperating agencies may not permit presplitting along one face or along a number of benched faces. The demand is for a more natural appearing rock face that will be compatible with the natural existing rock faces in the area.

Rock cuts can be designed to produce a staggered bench effect which will reflect natural terrain and accent natural fracture lines in the rock. When presplitting is necessary to stabilize the rock slopes, the use of staggered benches will break up the vertical drill scars.

Where slope stability is not a factor, nonpresplit blasting techniques will expose the natural rock fractures. In some instances, this produces the most pleasing results.

Where practical, design planting pockets or benches in the slopes for the introduction of plant material. It is desirable to spread topsoil on all rock benches to encourage grass growth and minimize the visual scar through revegetation. The planting of trees and shrubs will aid in reducing the size and scale of the rock cuts.

d. Clearing Techniques. In heavily forested areas, usual clearing techniques may leave a vertical wall of vegetation at the tops of cuts and toes of fills. In these cases, selective thinning methods will produce a softer edge by cutting out taller old trees in favor of younger ones. The object is to produce a natural forest edge effect.

Selective thinning methods combined within scalloped clearing lines and vista clearing to promote and frame scenic views will enhance the natural beauty of any project. There is, however, a point where excessive clearing is not beneficial. In some areas, the emphasis should be on bringing the forest as close to the roadway as safety permits. A balance is needed that emphasizes vegetation patterns above and below the highway slope.

e. Revegetation. Revegetated slopes are not only pleasing to view but are stabilized and require little or no maintenance. Re-established vegetation is also important as cover and food for wildlife.

Select grass seed that is native to or adaptable to the area. The seed mixture should satisfy criteria for elevation and slope exposure changes. Several seed mixtures may be required to satisfy all conditions on a relatively long project. Use soil mulches and netting to stabilize and protect the ground until grass is established.

Where practical, conserve topsoil from the project limits and replace it on the finished slopes. The topsoil not only provides needed fertility and a growing medium for grasses, it contains an abundance of native seeds. These forbs, weeds, and grasses usually grow fast and dense and will blend in with the undisturbed vegetation which effectively brings the background vegetation onto the cut slope.

Shrubs and trees can be planted to primarily beautify the disturbed roadside areas and blend them into the undisturbed areas. Using hydrophilic shrubs, such as willow and birch, grouped in areas of excess soil moisture will aid in stabilizing the area. Locate all plant groupings in areas most visible to the motorist.

It is FHWA and FLHO policy that at least one-quarter of 1 percent of funds expended for landscape projects be used to plant native wildflowers, except in ornamental landscapes, or unless a waiver is granted by the Division Engineer.

An ornamental landscape is one that is irrigated, has barked shrub beds, and has irrigated grass that is routinely mowed.

Requests for waivers can only be granted for the following conditions:

- Wildflowers cannot be satisfactorily grown.
- The available right-of-way is to be used for agricultural purposes.
- There are no suitable available planting areas.
- The planting poses a threat to endangered or rare plant species.

A waiver shall be documented with adequate justification in support of all findings and conclusions.

Erosion control seeding is not a landscape item although wildflower seeding associated with the erosion control seeding mix can satisfy wildflower seeding requirements in a landscape project.

In order for wildflowers to perpetuate themselves, they must be permitted to go to seed and become dormant. Identify on the plans all areas to be seeded with wildflowers. Provide in the contract for the installation of suitable markers to identify the wildflower seed beds for roadside management and maintenance personnel.

f. Slope Treatment. This technique consists of placing boulders, stumps, and old logs on cut and fill slopes to represent existing conditions beyond the clearing limits. These items are generally available on the project. Logs and stumps can be randomly staked to approximate a natural scattering on an adjacent slope. Boulders can be placed individually or in clusters. They are usually worked into the slopes to appear as natural outcroppings.

G. Right-of-Way and Utilities. This section ideals with determining right-of-way needs, acquisition of right-of-way, provisions for moving or accommodating utilities, right-of-way and utility plans, and acquisition of material sources.

Since the Federal Lands Highway Division offices work with so many different roadway owners and operating agencies, only general guidelines are provided. It is not practical to prescribe detailed procedures and methods applicable to all situations relating to right-of-way, utilities, and material sources.

1. Right-of-Way. The land that a highway occupies is the right-of-way (R/W). It consists of the land owned by the operating agency or land that the operating agency has a right to use for roadway purposes.

The right-of-way plans are official documents used to acquire real estate and property rights. The plans are often references for legal instruments such as deeds or other documents conveying land or interest in land to various parties. The R/W staff assembles data and prepares plans for the acquisition of R/W, including easements, permits, or any other substantiating documentation necessary. The final plans must be correct from the engineering standpoint and meet FHWA legal requirements and those of the highway agency acquiring the right-of-way.

a. Determining Needs. There is a basic conflict between the use of land for right-of-way and other uses. The R/W should provide for maintenance, control of access, utilities, future widening, and control of adjacent drainage and vegetation for ensuring sight distance and aesthetics. The same land is often desirable for dwellings, farming, commercial, or recreational purposes. Hence, a right-of-way is seldom ideal but is usually a compromise.

Establishing right-of-way widths can usually begin as soon as the earthwork design is substantially completed. The minimum R/W width is the horizontal distance from the centerline to the edge of clearing. It is always desirable to provide some additional area to accommodate minor changes in construction and to provide space for normal maintenance operations.

The clear zone recovery area should receive consideration when establishing new R/W limits. Good engineering judgment is essential in this area to determine when taking a prudent right-of-way equals the need for a portion of the theoretical recovery area.

It is not mandatory to provide right-of-way for new utilities. However, it is the usual practice to accommodate them when they do not conflict with the primary function of the roadway. Construction often causes the relocation of utilities located within the existing right-of-way. It is a requirement that the new right-of-way must provide areas for their relocation.

Poles or other surface utility relocations should be beyond the clear zone area or behind guardrail. Place underground utilities in the road shoulder, beneath the ditch, or preferably outside the right-of-way line. Pole lines usually require a minimum of 5 meters of width to accommodate the cross arm and anchor systems and to provide for control of vegetation under the wires.

Sometimes there is a need to have drainage control structures, channel changes, riprap, stilling pools, etc., constructed above or below the roadway. It is desirable to have these structures within the right-of-way so there is no question of the right to maintain or rebuild them. The R/W should extend at least 3 meters beyond these facilities. It is preferable to obtain right-of-way to cover these installations but in some cases a construction easement may suffice.

States, counties, and other cooperating agencies generally have standard widths for highway right-of-way. Contact the highway operating agency to determine the standard minimum widths and any other applicable criteria.

b. Right-of-Way Widths. Following the placement of slope limits on the detail map, work can begin on setting R/W limits. This assumes the designer knows the standard minimum widths and the desirable distance from the clearing limit to the R/W line.

The designer should keep the following in mind when establishing the final limits:

- It is desirable to have a uniform R/W width through each ownership for ease in locating fences and describing R/W.

- It is desirable to keep changes of R/W width to a minimum. Consider keeping the minimum length of constant width along centerline to 60 meters. Change widths when the right-of-way width needs changes by more than 5 meters over a length of 60 meters.

- Change R/W widths at property lines, if practical, to simplify legal description of right-of-way.

- Change R/W widths at even stations or at curve points. To make a symmetrical fence line, it may be necessary to change widths at 20 meter points or other odd stationing.

- Changes in width should taper from point to point except at property lines. Use a minimum of 15 meters, preferably 30 meters, along the centerline to avoid abrupt angles in the right-of-way line. This makes it easier to build and maintain right-of-way fences, and to mow and care for right-of-way plantings.

- Provide stopping sight distances at intersecting road approaches and provide R/W to maintain these sight distances. This is mandatory at all grade crossings of railroads.

c. Right-of-Way Plans. A State or cooperating agency acquires almost all right-of-way for Federal road projects. As such, the format for right-of-way plans varies between the different acquisition agencies.

In some instances the cooperators prefer to prepare their own right-of-way plans and only require a completed detail map with slope limits and all known property ties. In other areas, Federal Lands Highway Division offices are responsible for preparing complete and detailed plans in the precise format required by the agency responsible for the acquisition of right-of-way. The following guidelines and recommendations cover the preparation of plans.

Before developing the R/W plans, obtain title reports, copies of deeds and any other documents about existing right-of-way. In some cases the acquisition agency will perform this function.

Examine the documents for easements or other encumbrances to reveal the existence and location of waterlines, conduits, drainage or irrigation lines, or other features affecting construction.

The relocation plan prepared during the conceptual stage is available to the right-of-way designer for information and implementation when it is applicable to the project. If the plan is outdated or significant changes have occurred within the project corridor, it may be necessary to prepare a supplemental relocation study. The study should show how occupancy needs are to be correlated with specific available and suitable housing. Usually the R/W designer can request this information from the State or cooperator by working through the appropriate FHWA Federal-aid Division Office.

Resolving the right-of-way plan format and obtaining current title reports and other documentation opens the way to preparation of the actual right-of-way plans. Completed right-of-way plans generally consist of 4 elements (see Exhibits 9.11 through 9.14):

- Title Sheet.
- Tabulation of Properties.
- Vicinity Map and/or Ownership Map.
- Right-of-Way Plan Sheets.

The basic information required on all R/W plans is found in FAPG NS 23 CFR 630.B. The following supplements the instructions in the FAPG.

A standard construction type of title sheet, modified to reflect R/W criteria, may be used provided it is acceptable to the acquisition agency. All the information that normally shows on a construction title sheet can appear on the R/W title sheet.

Most projects require a vicinity map or total ownership parcel map. The map scale used should be suitable to show the entire project on one plan sheet. It should also show general information to depict the project in relation to surrounding communities, public and private road systems, and other local features.

Many States use the vicinity map to show ownerships and parcel numbers. This is often shown in tabular form with column headings as follows:

- Parcel Numbers.
- Recorded Owner.
- Total Assessed Ownership.
- Right-of-Way Required.
- Existing Right-of-Way.
- Remainder (Left and Right).
- Easements (Permanent and Temporary).

Minor variations of this tabular format will occur depending on the acquisition agency's practices, but the column headings shown seem to be consistent with most agency policies. It is usually permissible to place the parcel tabulation on a separate plan sheet if the vicinity map becomes too detailed. Some agencies show the parcel tabulation on the individual plan sheets rather than the vicinity map. It is difficult to go wrong if the vicinity map follows the format of the applicable agency manual. (This is essentially true if the project is on a county road system or a State system.)

In addition to the requirements of the vicinity map and other right-of-way documents, the following data shall show on the right-of-way plan sheets.

- **Alignment.** Show the base line that legally describes the right-of-way as a continuous solid line for the full length of the project including alignment data. Existing or additional centerlines show as dashed lines with or without alignment data as appropriate. Tie the existing stationing to the new centerline by station and/or bearing equations.

- **Control Features.** In addition to the culture tie requirements of Chapter 5, identify on the plans all Government subdivisions, platted subdivisions, donation land claims, National Park or Forest boundaries, Indian reservations, or farm units.

Show a minimum of one tie from the new highway centerline to an existing and recorded monument or government subdivision, particularly the monument from which the title report originates. Compute the tie

to a centerline intersection along the section subdivision line with a station, bearing, and distance to the monument.

Frequently it is necessary to resolve the issue of appropriate evidence of property lines for purposes of right-of-way activities. The property line could be a fence, ditch, partial section boundary (1/16), or the line described in the property deed. Locate, reference and show on the plans all topographic features such as fences, ditches, roads, etc., relating to property usage and boundaries. These topographic features shall be shown on the plans as they actually exist in the field. The property line is determined and designated from this data for right-of-way requirements.

(1) Right-of-Way Details. Right-of-way lines are continuous. These lines cross city streets, county roads, rivers, railroads, etc. and must match adjoining projects.

Show enough detail to describe the R/W for its entire length from a centerline or from a metes and bounds description. Tie any existing R/W retained for the new project and describe it from the new centerline or by metes and bounds description. Ties to a previous center line are not acceptable.

Only deeded land for R/W is always supportable in a court of law. Right-of-way by usage or prescription is in many cases not legally supportable. Therefore, when deeded right-of-way does not exist, neither the existing R/W nor the centerline of the existing road need be tied to the new road alignment and/or the new right-of-way.

Right-of-way widths and centerline stationing shall show at the beginning and ending of each plan sheet, and at all points of change in R/W width. Any easements required outside the R/W must show permit descriptions. These easements will accommodate intersecting roads and streets, land service, access and temporary roads, drainage areas, material storage areas, slope widenings, utilities, railroads, and other special uses.

Show centerline station at the beginning and end of each easement. Mark each easement as temporary (T) or permanent (P). If the easement is irregular in shape, include distance and bearings for writing a description.

Temporary construction easements give permission to use the land for a brief time, such as during construction, etc. Use permanent easements where parties other than the owner need to maintain a right to the land such as a pipeline or an access road.

Assign a parcel number to each recorded ownership for properties involved on each project. This includes all units of government. As a rule, number parcels starting with the first tract crossed by the project and then continue in sequence through to the end of the project.

(2) Access Control. The highway operating agency regulates control of access between a highway facility and all other property. When acquiring access rights, access control lines and all approved points of entry or exit from the traffic lanes must show on the plans. An access control line may or may not be coincident with the right-of-way line. Several types of access control, ranging from minimal to full control, may exist within the project limits.

When the access control agency permits individual road approach entries from adjacent properties, identify them on the plans by symbol or type including stationing, width, and grade.

d. Coordination with Acquisition Agency. Every highway agency responsible for acquiring right-of-way has a format and style that suits their method of operation. The R/W staff should meet with the acquisition agency early in the design process to determine the format and style acceptable to all parties.

The following general topics also merit discussion and resolution during the preparation of the right-of-way plans.

- How should property lines and ownerships show on the plan sheets?
- Can construction plans and R/W plans be combined? For separate right-of-way plans, is it necessary to have profile grade plan sheets? Are Federal-aid plan and profile sheets adequate or are separate sheets necessary?
- What is the policy for need, type, placement, and installation responsibility for R/W fencing?
- When the agency acquiring the right-of-way is also responsible for utility relocation agreements, what additional requirements are necessary to complete the plans?
- What is the process for modifying R/W plans after the acquisition agency has given final approval to the plans?

Sometimes the cooperating agency requests FHWA to furnish descriptions of the R/W needed. Sometimes the request is for a metes and bounds description. See Exhibit 9.15 for a sample description for parcel No. 9 shown on the R/W plans (Exhibits 9.12, 9.13, and 9.14).

e. Right-of-Way through National Forest Lands. In those cases where the acquisition agency and the Forest Service request that FHWA prepare right-of-way plans over National Forest Lands, the above plan preparation instructions apply. When the cooperator is a State highway agency, the R/W plans should comply with the memorandum of understanding between the State and the Forest Service. When the acquisition agency is a county or other local government entity, the State Highway Agency may assist the county in obtaining the appropriate easement deeds for the highway construction. The process will be expedited and function quite smoothly if the designer coordinates the procedures through the appropriate FHWA Federal-aid Division right-of-way office.

Monumentation of the final right-of-way through National Forest Land, if requested, should be in conformance with the memorandum of understanding between the State and Forest Service.

f. Right-of-Way Acquisition. Right-of-way acquisition shall be in accordance with the Uniform Relocation Assistance and Real Property Acquisition Policies Act of 1970.

Send the final right-of-way plans and supporting documentation to the agency responsible for acquiring the right-of-way and request them to proceed with the acquisition process. Although not mandatory, it is desirable that the plans and request for acquisition be sent through the appropriate FHWA Division Administrator.

It is also desirable to hold a field review of the right-of-way as proposed. All attending parties should resolve responsibility and timing for the various R/W clearance activities. Discuss the schedule for clearances, monitoring activities, contact personnel, delegation of authority, and related matters and record the decisions from the field review.

Upon receipt of the right-of-way agreements from the acquisition agency, the right-of-way designer shall see that all negotiated items such as fences, cattleguards, road approaches, building relocations, etc. are properly noted on the construction plans and rough draft special contract requirements prepared.

When the State or other cooperating agency cannot obtain the R/W by purchase, it is often obtained by condemnation under the right of eminent domain. This is a time-consuming procedure as well as one having some legal ramifications. Therefore, when the State or cooperating agency reports that condemnation is likely, the designer shall review the plans for possible line shifts or other modifications to eliminate the need for condemnation.

When right-of-way is condemned, the usual procedure is to get a right-of-entry to the land by a court ordered declaration of taking so construction can proceed. The court will determine (1) if the need for the right-of-way exists, (2) if its use will serve a public purpose, and (3) that the landowner receives payment for the land. The court requires the taking agency to post funds with the court equal to the estimated value of the property. At a later time the court, usually by jury trial, determines the value of the right-of-way and requires the taking agency to pay this sum to the landowner. The court then transfers title of the right-of-way to the taking agency by court order.

In these cases the designer will record the status of the R/W as being under condemnation and will not approve the project for construction without at least a right-of-entry document.

For projects requiring a housing or business relocation, obtain a statement from the State or cooperating agency that relocation assistance was provided or tendered. This procedure is mandatory and is normally part of the right-of-way certification furnished by the acquiring agency.

Construction easements grant the right to construct supporting elements of the project outside the normal right-of-way on private land. The State or cooperating agency acquires them in the same manner as right-of-way.

Often there is the need for a construction easement after the project is underway. In these cases the project engineer may work with the designer to document the need for the construction easement and to locate it. The designer prepares a description of the construction easement and requests the State or cooperating agency to obtain it.

FHWA may obtain some construction easements (such as for temporary haul roads, stockpile sites or material sources) directly from a landowner. These are special cases and are done only when the cost to FHWA would be the same or less than if obtained by the State or cooperating agency.

2. Utilities. FAPG CFR 645A and FAPG CFR 645B provide policy and guidelines on adjustments to utilities. The highway operating agencies have various degrees of authority to designate and to control the use of R/W acquired for public highway purposes. Their authorities depend upon State laws or regulations. Utilities also have various degrees of authority to install their lines and facilities on the R/W.

The general policy is that utilities can occupy the right-of-way if they do not conflict with the integrity, operational safety, or functional and aesthetic quality of the highway facility.

The term utility shall mean all privately, publicly, or cooperatively owned lines, facilities, and systems for producing, transmitting or distributing communications, power, heat, petroleum products, water, steam, waste and storm water not connected with highway drainage. Other services that directly or indirectly serve the public and are also considered utilities include cable television, fire and police signal systems, and street lighting systems. It shall also mean the utility company inclusive of any wholly owned or controlled subsidiary.

When irrigation districts or companies do work at Federal expense, treat them as utilities.

a. Determining Relocation Need. The initial contact made with the utility company by the R/W staff is in the form of a letter shortly after the design work begins. The letter must outline the proposed construction project, its length, termini, and other pertinent information that could affect the utility company, such as a tentative construction schedule. In some cases a small scale map may be helpful for describing project limits.

The utility companies should provide, when requested, plat maps of the project area showing the location of all existing facilities above and below the ground level. The letter of request should also state that the utility company will receive construction plans later, showing existing utility facilities.

The designer will note the following types of utility conflicts during the design:

- Those utilities that are in the way of actual road construction. These could be poles or buried facilities within the construction limits or buried lines exposed or damaged by construction operations.

- All hazardous utility objects above groundline within the desirable clear zone. Those objects within the clear zone but located in back of nontraversable cut slopes, behind guardrail or impact attenuators, or having breakaway features may not require relocation.

- Any utility installation not conforming to the aesthetic quality desired in the appearance of the highway and its environment.

b. Determining Responsibility for Utility Relocation. When the alignment and grade are firm, the designer shall check the plans and outline the utilities that may require relocation or adjustment.

The plans indicate responsibility for the utility adjustments. This could be Government, utility, or a combination.

When determining the responsibility for utility adjustments, identify each utility conflict on the preliminary plans. Color coding and/or symbols can be helpful in making proper identifications. A tabulation sheet showing conflicts by utility companies will help the designer as shown in Exhibit 9.16.

Determine financial responsibility using these guides:

- When the utility occupies the existing highway right-of-way, the Government's share of relocation cost is set out in applicable State law. This ranges from zero percent in most states to up to 100 percent in a few States.

- When the utility occupies Government land such as that administered by the Forest Service, National Parks, Bureau of Land Management, etc., all relocation cost is usually borne by the utility. This requires checking with the land management agency as there are cases when the utility has occupancy rights that require the Government to share in the cost of adjustment.

After establishing financial responsibility, the designer shows on the preliminary plans the method used to make the required utility adjustment. One way to accomplish this is to show on the plans at each location where conflict exists, the following information:

- Identify who is to move the facility (utility company, FHWA, State, etc.).

- Identify location (stationing, left or right of centerline).

- Identify who will pay for the relocation (utility company, FHWA, State, etc.).

A system of symbols can show the same information. In addition, some method of noting joint use of utilities (i.e., power and telephone lines on the same poles) is desirable for use on the plans.

There will also be cases where the utility move will be a combination of utility and Government expense. This covers instances where the utility is on existing R/W and would only need to move a short distance for construction purposes. However, FHWA wants them to move a greater distance for other purposes such as aesthetics or clear zone requirements.

The plans developed for construction or R/W may be adequate for utility plans. The essential information needed on utility plans includes the following:

- Centerline.
- Construction limits.
- Existing and proposed right-of-way.
- Edge of existing road.
- All utility installations.
- Easement, permit, and utility ownership data.
- Depths of underground facilities and elevations of all crossing wires less than 13 meters in height from the proposed grade line.
- The proposed utility construction necessitated by the highway improvement project.

Send a letter and plans to the utility companies inviting them to a field inspection. See Exhibit 9.17 for a sample of a letter to a utility company.

It may be prudent to provide the utility companies with a copy of FAPG CFR 645A and FAPG CFR 645B along with the preliminary plans. This is particularly true if the utility is a local entity and not familiar with their rights and obligations under FHWA policy and procedure.

In each letter inviting the utility companies to a field inspection, insert the following paragraph:

> Your company's preliminary engineering costs for plan preparation and estimating costs of the utilities to be removed, adjusted, or relocated at FHWA expense are eligible for reimbursement after date of this letter.

At the field review with the utility company's representative, discuss the following areas of mutual interest and resolve any conflicts (such as the following) to the extent possible.

- Are all the utilities requiring adjustment shown on the plans?
- Has the financial responsibility for the utility adjustment been mutually determined?
- Will the utility build the new relocated facility before cutting the existing one or can service be discontinued until the existing facility is moved to its new location?
- How long will it take to move the utility?
- What advance notice does the utility require before it performs the work? (The ideal situation is to have all utility adjustments completed in advance of roadway construction.)
- Do requirements for traffic control plans conform to the applicable standards in the MUTCD ?
- Is there evidence of the utility company's right-of-occupancy?

The designer shall document oral agreements made at the field review. The report should note the name and organization of those in attendance, the names of contacts during development of the utility plan, and any problems pertaining to facility relocations. The utility should receive a copy of the report.

Invite the highway agency responsible for permitting the utility to use a portion of the right-of-way to all field reviews and keep them informed of all developments. When the utility is on government land, involve the administrating agency in the utility relocation.

Following the field review, work with the utility's representative to determine the adequacy, practicality, and economic reasonableness of the portion of the relocation eligible for reimbursement by FHWA. This involves checking the utilities' relocation plans and reviewing their work estimate for accuracy and cost effectiveness.

The evidence of the right of occupancy submitted by the utility requires a check to determine its validity. The evidence may be a letter giving the numbers and/or identifying the use permit or a statement that the utilities are on private right-of-way or easements. If there is any question, check the permits through the applicable agency. The utility right-of-way easement over private property can be checked through the county records of deeds or assessments.

On approval of the utility relocation plan, the designer will transfer the information onto reproducible plan sheets to make copies for the utility agreement, if applicable.

The Government requires a utility agreement when any portion of the relocation costs are eligible for reimbursement. When the relocation costs are borne by the utility, the R/W staff will furnish plans, coordinate activities, and review the utility's proposal for compatibility with construction and safety requirements.

A utility agreement is a three part document consisting of the following:

- Utility Project Agreement Form
- Cost Estimate
- Plan Sheets

See Exhibit 9.18 for a sample format of a utility project agreement. The sample covers most types of relocation possibilities. Select those clauses applicable to the project specific relocation work.

When the rough draft of the agreement is complete, obtain the contract number from Planning and Coordination and request that they obligate the required funds. When notified that funding is clear, complete the preliminary agreement including cost estimate and plans.

Send a copy of the utility package (include occupancy permits, when applicable) to the cooperating agency with responsibility for its use. The responsible agency is usually the State highway organization or the county. When the relocated utilities fall within the Forest Service boundaries, send a copy to the Forest Supervisor's Office for review. The FHWA Division Office may want the opportunity to review the package to ensure that the proposal does not conflict with policy agreed to with the State.

When all the review comments are resolved, complete the final agreement package. The original and two copies of the final agreement requires signatures before they can be forwarded to the utility. The utility should return two signed copies. Distribute the signed copies and all necessary confirmed copies in accordance with office procedures.

Prepare a utilities packet for the project engineer consisting of the following:

- A copy of the agreement with exhibits.

- Copies of letters or memoranda dealing with the utilities.

- Copies of reports of field trips or meetings.

- Discussions of procedures or actions needed, such as traffic control, disruption of service, coordination of contractor and utility company operations, safety, etc.

The utilities packet is given to the appropriate construction staff for forwarding to the project engineer.

The construction unit is responsible for verifying the utilities work. When the utility performs the work before the award of the contract, the R/W unit is responsible.

After completion of the utility relocation and Government verification of the work, make final payment to the utility company, and record the work.

c. Location. Locate facilities to minimize the need for utility adjustment on future highway improvements. Avoid interference with highway maintenance and permit access to the facilities for their maintenance with minimum interference to highway traffic. Always consider clear zone requirements when making utility adjustments.

Locate facilities on uniform alignment as near as practical to the R/W line. On frontage roads, locate the facilities so that servicing may be performed from the frontage road.

Place facilities crossing the highway approximately at right angles to the highway alignment whenever possible--and preferably under the highway.

d. Retention of Existing Facilities. Under certain conditions, AASHTO policy permits existing facilities encountered during highway construction to remain in place. Facilities deviating from this policy may remain on the highway right-of-way when it is in the public interest and will not adversely affect the highway or its users. Any such retention will be with the understanding that compliance is mandatory when the facility is reconstructed.

When accident history or safety studies show that existing facilities are hazardous, relocate or shield them regardless of prior agreements with the utility. Changes in operating conditions of existing facilities, other than for routine maintenance, require a new permit from the highway operating agency before initiating such work or change.

e. Aesthetic Controls. If practical, place cluttered overhead facilities underground. The design of facilities should minimize any adverse visual impact and should be planned to preserve attractive landscapes.

New utility installations, including those needed for highway purposes, are not permitted on highway right-of-way or other lands acquired by or improved with Federal funds within or adjacent to areas of scenic enhancement and natural beauty. Such areas include public park and recreational lands, wildlife and waterfowl refuges, historic sites as described in 23 USC 138, scenic strips, overlooks, rest areas and landscaped areas.

New underground utility installations must not cause the extensive removal or alteration of trees visible to the highway user or impair the visual quality of the area.

Avoid new aerial installations unless there is no feasible and prudent alternative to the use of such lands and only if the following can be established:

(1) Other utility locations are not available, are unusually difficult, are unreasonably costly, or are less desirable from the standpoint of visual quality.

(2) Underground installations are not technically or economically prudent or are more detrimental to the visual quality of the area.

(3) The location and installation of the proposed facility will not significantly detract from the visual qualities of the area being traversed. The facility will employ suitable designs and materials to enhance aesthetic values.

No service connections shall cross freeways when a distribution line is available within a reasonable distance on the same side of the highway as the premises being served. Keep crossings of other highways and streets to a minimum.

Facilities to be located on or across highways having easements, such as through Forest Service land, Bureau of Land Management land, railroad land, etc., require the approval of those agencies.

f. Utility Installations on Highway Structures. Avoid utility attachments to bridge structures whenever possible due to a potentially negative effect on safe traffic operation, efficiency of maintenance, and appearance. In those cases where alternate locations are not practical, the method of attachment should meet the following requirements:

- Make sure the bridge design is adequate to support the additional load and accommodate the utility without compromise to highway features, including maintenance.
- Do not allow manholes in the deck.
- Locate the utility beneath the deck between outer girders or beams or within a cell in a position that provides adequate vertical clearance. Avoid any attachments to the outside of bridges.
- Attachments made by support rollers, saddles or hangers are acceptable when padded or coated to muffle vibration noise. Make attachments below the deck but do not allow bolting through the bridge floor. The design of the attachment device requires review and approval before installation by the bridge unit.
- Pipes and conduits carried through abutments should be sleeved and tightly sealed with mastic. Upon leaving the bridge, align the utility to the outside of the roadway in as short a distance as practical.
- Provide for linear expansion and contraction due to temperature variation by use of line bends or expansion couplings.
- Provide for shut-off valves, either manual or automatic, at or near ends of structures to provide a means of control in case of emergency.
- Provide suitable protection to prevent corrosion.
- When a pipeline is cased, vent the casing at each end to prevent possible buildup of pressure and to detect leakage of gases and fluids.
- When a pipeline attachment to a bridge is not cased, additional protective measures should be taken. Such measures include using a higher factor of safety in the design and construction and testing of the pipeline than would normally apply for cased construction.
- Communication and electric power line attachments should be suitably insulated, grounded, and preferably carried in protective conduit or pipe from the point of exit from the ground to the point of reentry. Carrier pipe and casing pipe should be suitably insulated from electric power line attachments.

g. Overhead Power and Communication Lines. In rural areas or on urban highway sections having the same design standards and other characteristics of rural highways, above ground facilities shall be located outside the clear zone. When circumstances warrant a lesser distance, facilities installed closer than other roadside appurtenances are not acceptable. It is ideal to locate all fixtures as near as possible to the right-of-way line.

A variance to maintain a reasonably uniform pole alignment is allowable when irregularly shaped portions of the R/W extend beyond the normal R/W limits. Excepted from these controls are poles or other ground-mounted appurtenances required for highway lighting. However, where possible, such poles and appurtenances shall be serviced by underground cable and designed to include a breakaway pole.

Where R/W is not sufficient to allow installation beyond the clear zone, place the facilities to minimize the hazard to an out-of-control vehicle (such as behind the guardrail).

On urban sections with posted speed limits of 35 mph or less, it may not be practical to locate poles and ground-mounted appurtenances beyond the curb or to protect them with guardrail. However, locate the facilities as far as practical behind the curb or outside the shoulder and/or parking area if there is no curb.

Minimum vertical clearance for conductors shall meet the requirements of the National Electrical Safety Code or applicable local codes. When codes conflict, use the code requiring the greater clearance.

h. Underground Electric Power and Communication Lines. Longitudinal installations located within the foreslope limits are acceptable. This is true only if an installation outside the ditch line would be extremely difficult or costly; or if the highway traverses a scenic area where an aerial installation would detract from the view; or if placing buried cable beyond the ditch line would require removal of trees and shrubs.

Locate installations placed within the foreslope limits a uniform distance from the pavement edge and as near as practical to the inside edge of the ditch. Do not place buried cable within 600 millimeters of a ditch line. The installation shall normally be as near to the right-of-way line as practical while maintaining a uniform distance from the highway centerline.

Locate all crossings as normal to the highway alignment as practical. Avoid crossings in deep cuts, near footings of structures, at-grade intersections or ramp terminals, at cross drains, and in wet rocky terrain.

Pedestals or service poles installed as part of a buried installation generally are placed 300 millimeters from the right-of-way line. Never locate pedestals within the highway maintenance operating area (including mowing operations).

Lines (cables) without encasement require a minimum bury depth of 750 millimeters, except to clear an obstruction such as a drainage facility. Then the depth may be reduced to 600 millimeters. Encased lines buried less than 600 millimeters are acceptable provided the encasement does not protrude into roadway base course materials. Encasement and installation shall conform to the applicable cooperator and/or utility company provisions.

Identify all buried cable locations by placing standard warning signs (markers) at the R/W lines for the crossings. Longitudinal installations require markers at appropriate intervals; however, for electric power cables, this interval shall not exceed 150 meters. The markers shall be offset as near the R/W line as practical.

i. Irrigation and Drainage Pipes, Ditches, and Canals. Bury irrigation line and pipe siphon crossings from right-of-way line to right-of-way line or from edge of clear zone to edge of clear zone, whichever is greater.

When crossing a roadway, water canals and irrigation ditches can pass through culverts or bridges. Open canals or ditches should not parallel highways within the clear zone. It is preferable to locate these outside the right-of-way limits.

3. Railroad Encroachments. The processing of railroad agreements and the preparation of plans for railroad encroachment projects usually are time consuming operations. The designer should initiate this process at an early stage to avoid delaying the development of the project.

Railroad agreements are three party documents between the cooperating highway agency, the affected railroad company and Federal Lands Highway Division. The responsibilities and obligations of each party must be spelled out in detail in the jointly signed agreement. There is no rigid format for preparation of the agreement but items needed in every agreement are spelled out in FAPG 23 CFR 646B.

In general, R/W is not acquired in fee from a railroad company. Instead, the highway operating agency acquires easements, access rights, temporary easements, encroachments, etc. for highway construction.

The cooperating highway agency or the affected railroad may prepare the actual agreement. However, it requires review and approval by all three parties. When it is agreeable to all parties, the construction may proceed on the basis of a right-of-entry permit with the actual details of formal agreement being resolved during the construction phase.

Each State usually has a procedure and guide to clear their projects through the appropriate railroad channels. The designer should contact the cooperating highway agency for additional guidance.

a. Pre-Survey. It is best to define the scope of the project by conducting an on-ground joint inspection of the site with railroad engineering staff, the State or highway operating agency, and other interested parties before starting a survey.

If possible, obtain a recent railroad map of the site indicating railroad right-of-way for the meeting.

This review should clarify other railroad company policies on these topics:

- The closest encroachment to the centerline of tracks permitted.
- Sight triangles.
- Traffic maintenance (detours).
- Drainage, bank protection, or other conditions to be encountered on the proposed highway location.
- Railroad work schedules.

b. Cross Sections. When a highway encroaches on railroad right-of-way, extend the cross sections across the railroad tracks at sufficient intervals to show the relationship between the finished highway grade and the railroad tracks. Have the cross sections taken in critical areas of the greatest encroachment and elevations taken at the top of rail.

Cross section each railroad structure and record the type of structure, the opening length, and other information for comparison with railroad map. This information will help determine whether the structure needs extending or replacing.

The survey should tie all railroad or other utility poles and any facilities located on the railroad right-of-way that could affect the design. Proposed utility adjustments shall show along with their ownership. Show all utility poles and vertical clearance of utility lines at grade crossings.

c. Horizontal Alignment. The designer locates highway centerline in the same manner as any other location with the following modifications.

- Show ties to the centerline of the railroad company's main track at each end of the encroachment area and at the beginning and the ends of the curves on the railroad. With this information, compute the bearings of the railroad tangents using highway data.

- Accurately locate railroad facilities such as head blocks, front face of buildings (depot, etc.), drainage structures, and bridges so that stationing will check with railroad plans.

- When the proposed highway crosses over the railroad centerline, make a tie showing highway station reference and railroad station reference with the angular tie between the two. Take a cross section at the intersection of the highway and railroad centerlines.

d. Vertical Alignment. In most cases the profile of the highway project will satisfy railroad requirements. However, at crossings take the top of the rail elevation at centerline and edge of proposed roadway for each rail. This allows easy correlation between highway finished grade at the centerline of the railroad with the railroad elevation at the intersection.

For a highway grade separation structure located above a railroad, obtain the following data:

- Railroad alignment data (all tracks).

- Elevation of top of rail for each track system at centerline of highway.

- Profile of each rail (top) for 150 meters each side of highway centerline.

e. Plan and Profile Sheets. The railroad stationing and curve data (including beginning and ending of the curves through areas affected by encroachment or crossing) shall show on the highway plans.

Show on the plans all railroad and highway right-of-way lines and widths, including easements. Compute the ties at right angles from the highway centerline and show all intersecting corners of the right-of-way. Show the ties at the beginning and the end of each encroachment and at the points of maximum encroachment.

Show all railroad drainage structures and other topographic data pertaining to railroad buildings, head blocks, and other points of control.

Furnish profiles for proposed special drainage or waterway channels to give the railroad company a more complete picture.

An adjustment in the railroad line, such as raising or lowering tracks to accommodate highway construction, is occasionally necessary. In this case a special profile along the railroad alignment will show the full extent of the raising or lowering of tracks. Carry the profile a sufficient distance outside of the adjusted area to give a complete picture of the proposed adjustment.

For a new crossing of the railroad tracks, prepare a special profile on either side of the crossing along the track centerline for several hundred meters.

f. Cross Section Plots. Cross section plots prepared in elaborate detail are not necessary. However, for highways encroaching on railroad property, it is advisable to show all the data obtained in the field.

Computer generated plots are acceptable with the possible exception of partial sections for drainage and approach design. For drainage sections, furnish elevations for inlets and outlets of pipe as well as channel elevations upstream and downstream. Show size and length of all drainage or other type structures in existence and proposed on the new construction.

Show railroad and highway information, including superelevation and widening where applicable.

The cross sections are usually plotted on standard reproducible cross-section paper. Maintain ample space between cross sections to ensure legibility.

Show the railroad right-of-way lines on all cross sections. Make sure the distance shown on the cross section from the encroachment line to the railroad right-of-way will check the field ties shown on the plan sheet.

Show the railroad and highway culverts on the cross sections and include the flow line elevations. This allows the consideration of extensions rather than relaying an existing pipe or installing a new one.

Some projects require slope permits or ditch easements in addition to the regular encroachment. In these cases, the cross sections shall show the railroad right-of-way line, the easement line, and the sloping permit or channel change line.

When raising or lowering a railroad track is necessary for highway construction, plot cross sections along the centerline of railroad tracks through the area affected.

g. Final Assembly. Forward the completed plans, profiles, cross-section rolls, and structure clearance, if applicable, to the owner agency and request their review and comments. A request to begin preparation of the formal agreement can accompany this submittal.

The final PS&E package review should ensure that the contract contains all conditions listed in the approved railroad agreement.

4. Railroad Grade Crossings. Before designing improvements of existing crossings or new crossings, arrange for a field inspection of the crossing site. The review should involve appropriate Federal, State, local, and railroad representatives.

The review should resolve financial responsibility, scheduling, and authorization to proceed with the work. The type, number and location of railroad signals to be installed should also be determined.

All utilities (both aerial and buried) in possible conflict with the proposed installation shall be noted, including facilities interfering with the proposed railroad signals or gate installations requiring adjustments. In some instances it may be preferable to adjust the location of the railroad signals. Consider any proposed future highway widening project when determining placement of the signals.

Photographs taken during a field inspection are very helpful during the design phase of the project.

The function of traffic control systems is to permit safe and efficient operation of railroad and highway traffic crossings.

A Passive Traffic Control System includes signing, pavement markings and grade crossing illumination. Signing used at railroad grade crossings should include the following:

- A railroad crossing sign, commonly identified as the crossbuck sign. The railroad is responsible for placement and maintenance of crossbuck signs.
- An auxiliary railroad crossing sign of an inverted T shape mounted below the crossbuck sign to show the number of tracks when two or more tracks are between the signs.
- An advance railroad warning sign.
- An exempt railroad crossing sign as a supplemental sign (when authorized by law or regulation) mounted below the crossbuck and railroad advance warning signs.
- A "do not stop on tracks" sign.

Pavement markings placed in advance of a grade crossing on all paved approaches shall consist of railroad pavement markings, "no passing" markings (two-lane roads), and stopping lanes (if needed).

Illumination of railroad crossings supplements other traffic control devices for nighttime railroad operations. Consider lighting where train speeds are low, where crossings become blocked for long periods, or where accident history shows that motorists experience difficulty in seeing trains or control devices at night.

Signals consist of post mounted flashing light signals and cantilever flashing light signals, and, where warranted, the addition of automatic gates. Any of the foregoing may or may not include a bell.

There is no single standard system of active traffic control devices universally applicable for grade crossings. An engineering and traffic investigation determines the type of active traffic control system that is appropriate.

Determine from Table 9-14 the level of crossing protection needed. Use these guides unless they conflict with State standards.

Signal installations will use the signals shown in the current edition of the MUTCD and the Railroad-Highway Grade Crossing Handbook. The locations of signals and automatic gates are shown in the MUTCD.

A railroad signal may be a point hazard that warrants the use of a traffic barrier or a crash cushion. Install all traffic barriers or crash cushions outside the minimum railroad clearance as shown in the MUTCD.

Truck and bus stopping lanes may be required at railroad grade crossings except for the following:

- Any railroad grade crossing where a police officer or a duly authorized flagger controls traffic.

- Any railroad grade crossing where a traffic control signal regulates traffic.

- Any railroad grade crossing protected by signals, with or without an automatic gate.

- Any signed railroad grade crossing exempt under State law.

The stopping lane geometrics shall consist of the following:

- The approach taper to the stopping lane shall be 50 meters long and the width may vary from 0 to 3.6 meters.

- The length of the full width stopping lane shall be 30 meters in advance of the centerline of the first set of tracks to 25 meters beyond the last set of tracks.

- The acceleration taper shall be 60 meters long and the width shall vary from 3.6 meters (full width) to 0 meters.

- The shoulder along the stopping lane shall be a minimum of 0.9 meters.

The decision to add stopping lanes is made on an individual project-by-project basis after review of the site and after determining legal requirements under the applicable State regulatory authority.

A good smooth surface is an important part of any railroad-highway grade crossing contributes to the safety of crossing vehicles. Typical types of crossing surfaces for railroad/highway grade crossings follow:

- Asphalt concrete.
- Concrete.
- Steel.
- Timber.
- Rubber (elastomeric) panels.
- Linear high density polyethylene modules.
- Epoxy-rubber mix cast-in-place.

Any highway grade crossing lacking a demonstrated need should be obliterated and all traffic control devices and tracks removed.

On the design plans show the basic roadway dimensions of shoulders, medians, traffic lanes, stopping lanes, and acceleration lanes, including pavement marking requirements. Show the angle of crossing, number of tracks, location of signals, and other railway facilities such as signal power lines, signal control boxes, switch control boxes, etc. The name of the railroad and whether the track is a mainline or branch line should be noted.

Sight distance is of primary consideration at grade crossings. The condition at a railroad grade crossing is comparable to that of intersecting highways where a corner sight triangle must be kept clear of obstructions. The desirable corner sight distance arrangement allows a driver approaching the grade crossing to see a train at such a distance that if the train proceeded without slowing down, it would reach the crossing about the time the highway vehicle can brake to a stop in advance of the crossing.

Plan and profile on both the railroad and highway should show for a minimum of 150 meters on both sides of the crossing. Extend the roadway profile as necessary to show all important vertical alignment data. Also show other important features that may affect the design of traffic operation of the crossings. These features include proximity of crossroads or city street intersections, nearby driveways or entrances, highway structures, vehicular ADT (including percentage of trucks and number of school buses), and train ADT.

If the railroad track is superelevated, the highway profile must conform closely to the grade across the top of the rails.

The plans shall show the type of signals proposed, the length of gates and/or cantilever required, and the number of signal heads and their facing direction. Also show the exact location of the signal supports in relation to the railroad and highway centerline. Signal cantilever arms and gates are normally located perpendicular to the roadway centerline. Show all railroad facilities, signal controls, switch boxes, and utility poles on railroad right-of-way in addition to those along the highway right-of-way. Pedestrian gates may be desirable in certain urban areas and need consideration in the design reviews.

Cantilever arms for signals are normally prefabricated in 600 millimeter increments. Determine the arm length for a four-lane road by measuring from the center of the inner lane to the desired support location. Have the end light units on the cantilever and on the pedestal installed back-to-back. Two-lane roadways do not normally require cantilevers except for unusual sight distance problems. All post-mounted lights on two-lane roadways with truck and bus stop lanes should have a cantilever with light units installed back-to-back over the main traffic lane and on the pedestal.

Wooden gate arms are available in lengths up to 13 meters. Fiberglass arms up to 10 meters and aluminum arms up to 12 meters in length are also available. Longer lengths require prior approval by the railroad company involved.

Gates should end 0 to minus 300 millimeters from the centerline of undivided roadways or from the near edgeline of the median on divided roadways.

Never paint two-way turn bays across railroad tracks. They shall end 30 meters from each side of the railroad tracks with barrier striping across the tracks.

A typical section on the plans shall show roadway and lanes widths, pavement markings for centerline, and edge and lane lines. Simple lines for poles, arm, and gate with circles for the required signal heads are acceptable on the typical section. Show the location of signal heads over center of lane, height of cantilevers above roadway, and distance of signal pole from centerline of travelway. Use only approved symbols.

The review of the preliminary plans and the procedure for requesting the cooperating highway agency to obtain the formal agreement for the proposed work is similar to the procedure discussed in 9.4.G.3.

Table 9-14
Guidelines for Railroad Crossing Protection

		Type of Railroad Facility		
Type of Highway	**Exposure Factor[1]**	**Non-Mainline**	**Single Mainline (under 100 km/h)**	**Double Track or High Speed Single Mainline**
Two Lane	Under 1500	Reflectorized Signs	Flashing Lights	Flashing Lights
	1500 to 5000	Flashing Lights	Flashing Lights	Flashing Lights
	5000 to 50 000	Auto. Gates[2]	Auto. Gates[2]	Auto. Gates[2]
	Over 50 000	Separation	Separation	Separation
Multilane	Under 50 000	Auto. Gates	Auto. Gates	Auto. Gates
	Over 50 000	Separation	Separation	Separation
All Fully Controlled Access	In all cases	Separation	Separation	Separation

Note:

[1.] Exposure Factor = Trains per day x vehicle ADT.
[2.] Automatic Gates to be used in urban areas and flashing lights in rural areas, unless conditions warrant otherwise.

5. Material Source Reclamation Plans. On FLH projects, all government designated material sources, except established commercially operated sources, require rehabilitation under an approved reclamation plan.

The reclamation plan shall set forth measures to return the land to the most appropriate function following use of the source. The site may be reclaimed in a series of stage reclamation efforts when several projects designate the same source. Side borrow sites within the right-of-way do not require a reclamation plan.

The reclamation plan provides that reclamation measures, particularly those relating to control of erosion, be conducted simultaneously with surface mining. When this is not possible, initiate reclamation measures at the earliest possible time after completion or abandonment of mining on any segment of the site area.

The plan would normally include some or all of the following:

- Vicinity map describing site boundaries as shown on the right-of-way or sundry site boundaries and enough information to locate the site on quadrangle or county maps.

- Existing water forms and ground contours. Existing contours are optional unless the design or permit process requires them.

- Proposed finished ground contours and cross sections needed to show finished slopes.

- Statement of the proposed subsequent use of the land. Include any local zoning and planning requirements, any indications of whether the site is intended for use by other contractors or maintenance forces in the future, and whether or not stage reclamation applies. For stage plans, provide interim reclamation measures that ensure an orderly depletion and restoration of the site. Schedule staged use to reclaim the largest possible surface area under the final reclamation plan.

- Manner and type of revegetation and other surface treatment of disturbed areas.

- Preservation or establishment of visual screening and vegetative cover to screen the view of the operation from public highways, public parks, and residential areas.

- Proposed practices to protect adjacent surface resources. This includes prevention of slumping or landslides on adjacent lands.

- Slopes that are blended with adjacent terrain to meet future use requirements. In all cases, provide for adequate safety.

- Method of preventing or eliminating conditions that create a public nuisance, endanger public safety, damage property, or are hazardous to vegetative, animal, fish, or human life in or adjacent to the area.

- Method of controlling contaminants and disposing of surface mining refuse.

- Method of diverting surface waters around the disturbed areas.

- Method of restoring stream channels and stream banks to a condition minimizing erosion, siltation, and other pollution.

- Planned lakes, ponds, or other bodies of water that would be beneficial for residential, recreational, game or wildlife purposes.

- Restoration of any borrow, quarry or pit site. Sites resulting in a lake or wetland shall involve careful planning and shall take into consideration all factors impacting the fauna and flora.

- Proposed stockpiles of 10 000 metric tons or more.
- Permanent buildings and any protective stipulations required.
- Photographs whenever possible.

Federal Lands Highway Division will cooperate with other governmental and private agencies to provide land reclamation of the sites used for the described purposes.

Reclamation plans for sources located on Federal Lands require coordination with and approval by the agency responsible for administration of the land in accordance with the appropriate Memorandum of Understanding.

Reclamation plans for sources on private lands usually require coordination and approval by a State and/or local agency with responsibility for issuing and administering material removal operating permits.

H. Reviews. PS&E development involves various stages of review. The objective of a field review/plan-in-hand inspection is to ensure to the maximum extent practical that the location and design reflect and are consistent with Federal, State and local goals, objectives, and standards.

All cooperating agencies and appropriate Federal Lands Highway Division staff should be invited to each field review. These reviews give the designer the opportunity to present the proposed design to the cooperating agencies and to solicit comments to ensure that the design is being developed in compliance with the intended scope, and social and environmental commitments.

It also gives the designer the opportunity to verify data and check office proposals against field conditions to minimize construction concerns.

Field reviews give cooperating agencies a medium for free and open discussion that encourages early and amicable resolution of controversial issues that may arise during the development of the PS&E package.

The need for a field review to fulfill the stated objective depends on a wide variety of factors that cannot be predetermined even on a project-by-project basis.

The reviews may range from multi-disciplinary and multi-agency inspections to specialized on-the-ground meetings with a single discipline to resolve a specific problem. In all cases, the conclusions reached at the field reviews require documentation and distribution to the interested parties.

The designer will usually be involved in at least three design reviews as follows:

(1) The first review covers the preliminary design and results in approval of the major design features for a project, e.g., horizontal and vertical alignments, typical section, access control, etc.

The information available for this first review ranges from very little to completed detail maps and profiles showing preliminary alignments and plotted cross sections. This strictly depends on the scale of construction proposed, (e.g., RRR to new construction).

At these early reviews, concentrate on resolving roadway geometrics, safety considerations, environmental mitigation efforts, and cost effectiveness of the proposed improvement.

Emphasize any exceptions to standards along with the associated hazards so that the highway operating agency is aware of the ramifications of the decisions.

(2) The second or plan-in-hand design review is to review preliminary plans and specifications for the proposed project. On some projects an intermediate review may not be necessary to complete the design. The primary purpose of this review is to finalize the design elements and other special conditions for inclusion in the PS&E package.

At this second stage the preliminary design should conform with the governing criteria, including input from geotechnical and hydraulic reports, environmental documents, safety requirements, and other matters pertinent to the project. Discuss those items affecting the plans or special contract requirements and make arrangements for obtaining the necessary data.

Following the intermediate design stage, the designer should prepare the final plans, special contract requirements, and complete the engineer's estimate for the project.

(3) The third stage in the process consists of the final plan-in-hand or PS&E review phase. After revising the plans and special contract requirements to show changes from the previous reviews, the PS&E package shall be distributed internally for a final review by staff specialists to ensure consistency with programming, environmental, geotechnical, hydraulics, bridge, or other project requirements. The PS&E package is also to be forwarded to interested agencies for their review and comment. Depending on the thoroughness of the previous reviews, an on-site inspection may or may not be required.

In either case, resolve all comments received concerning the proposal. The end result of this final review phase is the solicitation of the contract package.

9.4.I. Plans.

I. Plans. Plans consist of a series of drawings containing engineering data about the location, character, and dimensions of the work, including layouts, geometrics, cross sections, structures, and related details. The plans, together with the specifications, shall contain all of the data required for the contractor to submit a bid, stake, and construct the project.

The overall size of plan sheets shall be 864 by 558 millimeters. The standard size plan sheets provide a 70 millimeter margin for the binding on the left edge, a 14 millimeter margin on the right edge, and a 14 millimeter margin on the top and the bottom. This provides an effective sheet size of 780 by 530 millimeters.

Reduced plans should be one-half the full size, or about 432 by 279 millimeters. Reduced plans are generally accepted throughout the highway industry. In some cases plan sheets may be as small as 216 by 432 millimeters.

The organization of a normal set of construction plans is outlined in Section 9.6.A.2. The format for abbreviated plans is not detailed. The designer should consider the expected work and arrange the format accordingly.

1. Bridge Plans. The designer will usually receive a complete set of bridge plans and accompanying draft special contract requirements for insertion into the PS&E assembly. The bridge plans and plan-profile sheets shall be cross-checked to ensure that stationing, gradients, elevations, and other geometric details are identical. The designer shall review the notes on the bridge plans and the draft special contract requirements to eliminate any conflict with other provisions of the contract. Transfer quantities on the bridge plans to the summary sheet and assign item numbers as appropriate. Resolve any differences found during the review and number the bridge plans for insertion into the final package.

2. Standard Drawings. Standard drawings are designed for repetitive use and to provide uniformity of design and construction where the construction details are the same from project to project. Use standard drawings for culverts, minor drainage structures, guardrail and other items as appropriate. Local State Highway Agency standard drawings may be used where Divisions deem their use is more appropriate.

The Federal Lands Highway Office (FLHO) issues standard drawings for use in the Federal Lands Highway programs. Standard drawings, together with the specifications, contain all appropriate information that is necessary to describe the details of the proposed work. The FLHO maintains the standard drawings and supersedes or withdraws those drawings which become obsolete or ineffective.

When a Division office must modify standard drawings for specific projects, they become special drawings and they no longer have typical standard drawing title blocks. To prevent confusion, title blocks for special drawings shall be completely dissimilar to the standard drawing title blocks.

A Division office or FLHO may propose new standard drawings or revisions to existing standard drawings at any time. Division offices shall submit their proposals to the FLHO for consideration as summarized below. When it is determined standard drawings should be developed, adopted, or revised, the FLHO and Divisions will agree upon a responsible Division to perform the preparatory work.

The responsible Division shall develop or modify standard drawings on the CADD system. The responsible Division will then submit proposed new or revised standard drawings to the FLHO. Any special contract requirements for the standard drawings should accompany the distribution. Normally, the submission to the FLHO should include five copies of special contract requirements and five copies of half-size plans. The responsible Division shall also send two copies of each directly to the other FLH Divisions. The memorandum shall request the FLH Divisions to send comments to the FLHO with copies to the other FLH Divisions.

The following process shall be used for approval of proposed new standard drawings and revisions to approved standard drawings:

- The FLHO will make distribution of the proposed new or revised standard drawings to the appropriate headquarters offices and industry with a request for comments.

- Each Division shall furnish comments to the FLHO, with informational copies to the other Divisions.

- The FLHO will consolidate and review the comments from the Divisions and other offices and forward them to the responsible Division with any recommendations.

- Upon disposition of comments, the responsible Division will resubmit the standard drawings to the FLHO. The submissions should include a summary of the disposition of comments. If needed, additional distributions shall be made by the FLHO in accordance with these procedures. If additional distributions are not required, approval shall be given to the responsible Division to finalize and date the title block of the standard drawings. The approval date or revision date to be included on standard drawings shall be provided with the FLHO approval.

- The responsible Division office shall distribute electronic versions for the CADD systems to each Division The responsible Division shall also send the FLHO 2 copies of the 279 mm by 432 mm standard drawings, and an electronic version in a format compatible with WordPerfect.

- The FHLO will distribute a complete list of the standard drawings with the latest appproval or revision dates with the approval memorandum noted above. Each Division shall insure that latest approved standard drawings are identified in their CADD files.

In standard drawings the lettering will be equivalent to upper/lower case FONT 23 excluding titles and subtitles which will be FONT 1. Standard letter size will be equivalent to standard Leroy size 200. Minimum letter size will be equivalent to standard Leroy size 140. Use minimum letter size sparingly to insure clear and readable plans at the reduced scales proposed for one-half size plans and letter sized abbreviated plans. Additional information is available in the CADD users manual.

J. Engineer's Estimate. An engineer's estimate of cost is prepared for each project as part of the PS&E assembly. The estimate serves as the basis of probable construction cost and as a guide to evaluate bidders' proposals.

The estimate is a listing of all items of work in the contract, showing quantity, unit of measurement, unit cost, and total cost of each. The total amount of all items of work, including appropriate incentive payments, makes up the Construction Estimate. Contingencies, construction engineering, project agreement costs, and other costs added to the construction estimate makes up the Program Amount.

When a contract is financed by multiple funds, and expenditure of a fund is limited to a particular section, a separate estimate, summary sheet, and bid schedule are necessary for each section. When a contract is financed by more than one type of fund, but expenditures are not limited to a particular section, only one bid schedule is necessary, supported by a combined estimate and summary sheet.

Each item of work listed in an estimate needs a description and a unique number. Each Federal Lands Highway Division office maintains a current listing of contract items with their respectively assigned descriptions and unique numbers. When the listed contract items are not applicable to the anticipated work, new items with descriptions and unique numbers will be established by the responsible party and furnished to the designer.

The unique numbers assigned to the items of work serve as input into the engineer's estimate program. This program uses the unique numbers as a basis for other related programs such as bid schedule, tabulation of bids, average bid prices, and the construction progress estimate. A unique number, once assigned to an item, should not be changed.

Bridge items may not be applicable to more than one bridge or structure. Only those items physically incorporated into the bridge structure are considered bridge items. For coding purposes, the following are not considered bridge items: detours, detour structures, loose riprap, slope protection, and the removal of existing bridge structures.

The FLH Engineer's Estimate System software program is used to prepare the engineer's estimate. The designer is responsible for entering the initial pay item names, quantities, and unit bid prices into the system to obtain the engineer's estimate. On-screen directions for entering the data makes the program relatively easy to use. The engineer's estimate is the data base for preparation of the bid schedule, bid tabulation, progress, and final construction estimates using other features of the Engineer's Estimate System. A bid history data base is also developed that maintains current unit bid prices for use by the designer. The designer must evaluate the bid history data to help determine the most likely low bid for the item.

1. Computation of Quantities. The designer determines the contract items needed for the work. All computations for estimating quantities are a part of the supporting data. Keep the computations in support of a contract item together and the items listed in numerical sequence.

The Designer may specify that some work will not be paid for directly. This work consists of small quantities that would be difficult or uneconomical to measure. Limit the no-payment work to an absolute minimum and clearly define it on the plans and in the Special Contract Requirements so bidders can adequately include it in their cost estimates under other contract items.

A lump sum item can is used where the work required consists of a number of inter related, small quantity items to obtain a specified end result or the work can be described in complete detail in the Special Contract Requirements. Show a complete breakdown of the work required on the plans when a number of items are included in the lump sum item.

The Designer determines the work to be included in a contract, but the Construction Branch determines the method to be used to measure the work. A little early coordination can save a lot of last minute adjusting.

The following paragraphs cover many of the bid items commonly used in road and bridge construction contracts under the Standard specifications, FP-96. Guidance is also provided on items where it is difficult to separate quantity and payment. In addition, miscellaneous information is included to assist the designer in selection of items and how to place the items on the plans.

a. Division 100 General Requirements

This part of the FP-96 contains general contract requirements applicable to all projects. No direct payment is made under Division 100. Within this Division, Section 109.— Measurement and payment, covers most of the details the designer should become familiar with to compute quantities.

b. Division 150 Project Requirements

This part of the FP-96 contains project requirements applicable to all projects. Work under Division 150 will be paid for directly when there is a pay item in the bid schedule for it. When there is no work item, no direct payment will be made.

- **Section 151.— Mobilization.** On large projects, use 6 to 8 percent of the construction estimate rounded to the nearest $5,000 or $10,000. On small projects, use 9 to 10 percent of the construction estimate rounded to the nearest $1,000 or $5,000. Do not rely totally on the Engineer's Estimate system to calculate the mobilization amount. Adjust the amount by rounding off so it is reasonable for dollar value of the contract.

- **Section 152.— Construction Survey and Staking.** Determine the bid price of this work can be determined on the basis of crew size, survey requirements, and equipment to estimate hours and cost. When using average bid prices from previous contracts, make sure the survey requirements are essentially the same or the comparison will be flawed. The basis of payment under this section is lump sum, kilometer, each, hour, or other appropriate units.

- **Section 153.— Contractor Quality Control.** This work is not measured for payment. Even though there is no payment for this work, it does cost a contractor money. It is assumed that the contractor's bid price for work under Section 154 includes the costs of the work under this section.

- **Section 154.— Contractor Sampling and Testing.** The cost of the work under this section is usually based on average bid prices. Although there is considerable variance in average bid prices, an amount equal to 2 to 2.5 percent of the construction estimate will usually cover the work involved. Determine if the project requires a minimal amount or an extraordinary amount of testing in relation to the construction estimate before applying the 2 to 2.5 percent rule. The basis of payment is lump sum although other units could be used in unique and unusual circumstances.

- **Section 155.— Schedules for Construction Contracts.** Base the cost of the work under this section on average bid prices.

- **Section 156.— Public Traffic.** The work described in this section is measured for payment under other sections of work with one exception. If a detour is constructed and maintained under a lump sum item, include the work should under this section. If there are extraordinary complications with public traffic, adjust the prices in the appropriate section to cover the work or add additional items of work in the sections.

- **Section 157.— Soil Erosion Control.** Work under this section covers the erosion control plan for the project. It also provides items of work necessary for the Storm Water Pollution Prevention Plan which is included in most construction contracts.

  Most projects will have several items in the bid schedule to cover this work. A very simple project where the erosion control features can be completely detailed on the plans and described in the Special Contract Requirements may be a lump sum item. The use of an item for Soil erosion control, using a contingent sum pay unit is not permitted. In addition to lump sum, pay units of meter, each, square meter, hectare, kilogram, hour, and other related units are acceptable.

  The past practice for developing erosion control is no longer adequate for today's requirements. The current emphasis is to retain all sediments within the construction limits and stabilize them in place.

  Evaluate every cutslope, embankment, stream crossing, or other disturbance, and determine what effort and devices are required to stop sediment from escaping beyond the construction limits. Transcribe this evaluation to the erosion control plan. If a stage construction concept is being considered, evaluate each stage of the work to arrive at an adequate erosion control plan.

  Consider the items in the FP as a good beginning for erosion control devices. Do not hesitate to propose additional methods of controlling erosion and sedimentation. Not all temporary and permanent erosion control features need to be addressed under Section 157. They can be incorporated into other sections of work if it is more appropriate.

c. Division 200 Earthwork

- **Section 201.— Clearing and Grubbing.** The design program computes quantities for clearing and grubbing and provides subtotals as desired by sheet total, or 350 meter intervals or as user defined. These subtotals are placed on the profile part of the plans or on a separate tabulation of quantities to the nearest 0.01 hectares. It may be necessary to round the subtotals so the total shown on the plans equals the design program output. Compute the acreage of any isolated areas and road approaches of significant size or measure the areas by planimeter. Show this quantity on the plans with the mainline roadway quantities using an appropriate note.

  On the supporting data sheet, show the design program total plus any manually computed hectares. The total of these hectares is the plan quantity shown on the Summary of Quantities sheet of the plans. Add an allowance so the bid schedule quantity reflects the next tenth of a hectare. If there is a large number of hectares, rounding up more than a tenth of a hectare is appropriate. If lump sum is used as a payment, show the number of hectares used for the lump sum calculations on the Summary of Quantities sheet or other plan sheet.

- **Section 202.— Additional Clearing and Grubbing.** Although the design program can be used to compute hectares under this section, it is seldom worth the effort. Manual computations are usually faster and easier. Follow the rounding guidance under Section 201 for hectare pay units.

  Plan and bid schedule quantities are usually the same. Quantities for removal of individual trees and individual stumps are usually estimated during one of the field reviews.

  If a field estimate is not available, allow 5 square meters for removal of individual trees in sparsely forested areas, and 10 square meters on projects in heavy timber areas where large numbers of leaning trees and snags exist. These figures are appropriate for a 6 to 8 kilometer grading project.

- **Section 203.— Removal of Structures and Obstructions.** Computations of quantities under this section generally come from the survey notes or from measurement taken at the field reviews. If average bid price data is not available for the work proposed, use equipment rental rates, labor rates, and overhead and profit margins for the estimate. There is a tendency to underestimate the time to remove structures and obstructions so be somewhat liberal in estimating the number of hours to perform work.

  Use this section where the work consists of salvaging, removing, and/or disposing. If the work consists of removing and reincorporating or resetting an item on the project, put the work under the applicable section, e.g., removing and resetting guardrail is provided for under Section 617.

- **Section 204.— Excavation and Embankment.** The design programs provide a listing of the mainline quantities for a project. Manually compute or estimate additional quantities outside the normal roadway prism. Insert these quantities into the design program run as an "added quantity" so they can be included in the mass figures. Show excavation quantities on the plans and show the totals on the Summary of Quantities sheet.

  Show the design program total on the supporting data sheet total plus any added quantities. This total is the plan quantity shown on the Summary of Quantities Sheet. Add about 10 percent to obtain the Bid Schedule Quantity. The allowance used should round the bid schedule amount to an even 1000 cubic meters.

  When computing quantities for borrow, topping, or embankment, use an appropriate shrink or swell factor to arrive at the quantity required to make the computed volume in the roadway. For borrow and topping, add about a 5 percent allowance to obtain an even 500 cubic meter bid schedule quantity. The plan quantity and bid schedule quantity for embankment construction, furrow ditches and rounding cutslopes does not usually require an allowance.

- **Section 205.— Rock Blasting.** Although few projects have a pay item for this work, it is still necessary to estimate the amount of controlled blast hole required to arrive at the correct unit price analysis for roadway excavation. Use the average height of the rock face times the length, and 1 meter spacings to arrive at the estimated meters of blast hole. Round the figure to the nearest 50, 100, or 500 meters depending on the quantity. Rounding within the original computations so the plan and bid schedule quantity is the same.

- **Section 206.— Watering for Dust Control.** Estimate the number of expected days requiring dust control and multiply by an appropriate number of cubic meter units per day. Climate, traffic volumes, and soil conditions have major effects on this item. Construction records from previous projects in the area are very helpful in estimating quantities. The plan quantity and bid schedule quantity should be the same. Round within the original computations.

- **Section 207.— Earthwork Geotextiles.** Compute the square meters of coverage required. For small quantities of less than 3000 square meters, add about 10 percent to round to the nearest 100 square meters. On quantities over 3,000 square meters, add 5 percent and round to nearest 500 square meters.

- **Section 208.— Structure Excavation and Backfill for Selected Major Structures.** Compute the quantities of structure excavation, foundation fill, structural backfill, and structural backfill for walls as detailed in the FP. Add a small allowance to obtain an even 10, 50, or 100 cubic meters for the bid schedule quantities.

  In many instances, it is the Structures Section's responsibility to compute these quantities. The quantities are usually shown as contract quantities. The Structures Section will provide quantities needed for shoring and bracing, and cofferdams.

- **Section 209.— Structure Excavation and Backfill.** Although there is no pay item for work under this section, it is necessary to compute the quantities for bidders to use in estimating costs. This is particularly true with culverts where the estimated excavation is shown on the Drainage Summary Sheet.

- **Section 211.— Roadway Obliteration.** Compute areas by any acceptable method including planimeter. Add about 10 percent and round to 100, 500, or 1000 square meters depending on quantities. When using a lump sum pay unit, show the approximate square meters of obliteration on the plans.

- **Section 212.— Linear Grading.** The measurement unit for this work is station. However, show the design earthwork quantity in cubic meters on the plans for the bidders information. Without a good history of average bid prices, use the cubic meter quantity to determine the unit price which is then converted to stations. Round this item to the nearest 0.001 station. It is almost always a contract quantity.

- **Section 213.— Subgrade Stabilization.** Compute quantities by the square meter or metric ton as appropriate. Round square meter computations to 100 or 500 square meters. Round metric tons to 10 metric tons.

d. Division 250 Structural Embankments

- **Section 251.— Riprap.** Measurement of riprap is cubic meter or metric ton. Add at least 10 percent allowance to obtain an even 50, 100, or 500 cubic meters or metric tons in the bid schedule. Show the class of riprap on the plans by one or all of the following methods.

  - By tables
  - On special typical sections for riprap
  - On the drainage summary if riprap is associated with culvert work

Excavation for toe trenches is seldom paid for directly; however, show quantities on the plans for informational purposes. Where toe trenches are excavated under an existing structure or adjacent to piers, etc., that involve structural excavation under Section 208, it may be appropriate to include toe trench excavation for payment under Section 208.

The supporting data sheet should have a list or table of riprap showing locations, elevations of top of riprap, class, quantity of riprap, and quantity of the trench excavation.

- **Section 252.— Special Rock Embankment and Rock Butress.** The measurement of rock embankment is cubic meter or metric ton. Add at least 10 percent allowance to obtain an 10, 50, or 100 cubic meters or metric tons in the bid schedule. Show the rock embankment on the plans by one or all of the following methods.

  - By tables
  - On special typical sections for rock embankment
  - On the drainage summary if rock embankment is associated with culvert work.

Excavation for toe trenches or embedment is not paid for directly; however, show quantities on the plans for informational purposes.

- **Section 253.— Gabions.** Measurement of gabions is square meter or cubic meter in place. Only minor rounding of about 50 square meters or 10 cubic meters is required.

  Show gabion elevation and cross section views on the plans. Plan views are helpful where there are variations in the face of wall distance to a reference line. Tables on the plans showing station to station, wall quantities, and excavation are appropriate.

- **Section 254.— Crib Walls.** Follow the guidance for gabions.

- **Section 255.— Mechanically Stabilized Earth Walls.** Follow the guidance for gabions.

- **Section 257.— Alternate Retaining Walls.** Although the measurement for this work is lump sum, provide the estimated square meters for informational purposes.

e. Division 300 Aggregate Courses

- **Section 301.— Untreated Aggregate Courses.** The method of measurement under this section is cubic meter, metric ton, or square meter.

  Compute the compacted volume of the material to be placed on the roadbed by using the dimensions shown on the Typical Section Sheet. In addition, compute the compacted volumes for widened areas, approach roads, parking area, and tapers for channelized intersections.

  To determine the hauling vehicle volume, multiply the compacted volume by 1.33. To determine metric tons:

  (1) Multiply the compacted volume by 1.33, then
  (2) Convert to metric tons by multiplying (1) by 1.65 metric tons per cubic meter (If the material is pugmill mixed, compensate for the mixing water by multiplying (2) by 1.06).

The 1.65 metric tons per cubic meter factor applies to aggregate with a specific gravity of around 2.70. For sources with significantly different specific gravity, it is appropriate to multiply the 1.65 factor by the known specific gravity divided by 2.70.

The quantities for crushed aggregate base usually show on a Tabulation of Quantities Sheet in the plans. Show the rate of application in metric tons or cubic meters per kilometer or per square meter for the bidder's information. Also, specify if the quantities include the 6 percent water additive.

Aggregate by the cubic meter = (Average W)(D)(L)(1.33)

Aggregate by the metric ton = (Average W)(D)(L)(1.33)(1.65*)(1.06**)

Where: W = Width in meters
D = Depth in meters
L = Length in meters

* Metric tons per cubic meter
** 6 percent allowance for mixing water where a pugmill is required.

When the maximum dry density is available from the lab reports, multiply the compacted volume by the dry density and convert to metric tons.

Aggregate by the square meter = (W)(L)

If square meter measurement is used, show the exact limits used to arrive at the quantities on the typical section. Where measurement is by the square meter, compute the cubic meters or metric tons to provide bidders with an application rate.

Add a 5 to 10 percent allowance to quantities measured by the metric ton or cubic meter so the bid schedule quantity is an even 500 or 1000 cubic meters or metric tons. Square meter measurements require very little allowance as the limits are pretty well predetermined on the Typical Sections. Round up to an even 1000 square meters for the bid schedule.

- **Section 302.— Treated Aggregate Courses.** Compute quantities for this section similar to Section 301 for metric tons or square meters.

- **Section 303.— Road Reconditioning.** Measurement under this section is kilometers or square meters. Use kilometers for mainline work and side roads where widths are relatively constant. Use square meters for parking areas and other oddly shaped areas or for very small quantities of work.

  Round kilometers to the nearest 0.01 km for the bid schedule. Add 5 to 10 percent to the square meters to obtain an even 100 or 500 square meters in the bid schedule.

- **Section 304.— Aggregate Stabilization.** Measurement for aggregate stabilization is kilometers or square meters. Follow the guidance under Section 303 to compute quantities.

  Provide an allowance for chemical additives so the bid schedule quantity comes out to an even 10, 50, or 100 metric ton quantity.

- **Section 305.— Aggregate-Topsoil Course.** Measurements under this section include metric ton, square meter, cubic meter, or meter. Provide an allowance to round the bid schedule amount to an even 10, 100, or 500 units as appropriate.

- **Section 306.— Dust Palliative.** Measurement for the dust palliative application is the kilometer or square meter. Very little allowance is needed. The dust palliative material is measured by the metric ton. Add a 5 to 10 percent allowance to get an even 10, 50, or 100 ton bid schedule quantity.

- **Section 307.— Stockpiled Aggregates.** Measurement for stockpiled aggregate is the metric ton or cubic meter. Usually the amount has been predetermined and no allowance is necessary.

  The preparation of stockpile sites is measured by the hectare. Provide an allowance so the bid quantity shows a whole hectare.

- **Section 308.— Minor Crushed Aggregate.** Measurement is based on cubic meter or metric ton. Be liberal in estimating quantities so only minimal, if any, rounding is required for the bid schedule quantity.

- **Section 309.— Emulsified Asphalt Treated Base Course.** The measurement for this section is metric ton or square meter. Compute metric tons according to the guidance under Section 301. For square meters, use length times width. Show the exact limits used in the computations on the typical section. Only a minor allowance should be used with square meters. Round up to an even 1000 square meters for the bid schedule.

f. Division 400 Asphalt Pavements and Surface Treatments.

- **Section 401.— Hot Asphalt Concrete Pavement Through Section 407.— Open-Graded Emulsified Asphalt Pavement.** Measurement under these sections is the metric ton. Compute the compacted cubic meter volume of the material to be placed on the roadway using the dimensions shown on the Typical Section Sheet. In addition, compute the volumes for widened areas, approach roads, parking areas, and tapers for channelized intersections.

  For dense graded mixes, multiply the volumes by 2.30 metric tons per cubic meter to obtain tonnage. This factor assumes a plant mix mass unit weight of 2300 kg/m^3.

  Asphalt Pavement (Metric tons) = (Average W)(D)(L)(2.30*)

  Where: W = Width in meters
  D = Depth in meters
  L = Length in meters

  * The maximum density obtained from the lab reports may be substituted for this factor in the equation.

  For open-graded mixes, multiply the volumes by a metric tons/cubic meter factor obtained from the Materials Section. The unit mass density of a cubic meter of open-graded mix is considerably less than dense graded-mix.

  To the total of the above quantities, add an allowance of 3 to 5 percent to obtain an even 500 or 1000 metric tons in the bid schedule.

  When the asphalt is a separate pay item, use 6 percent of the metric tons of asphalt base or pavement mix for dense-graded mixes. Check with the Materials Section for any significant differences on a particular project. For open-graded mixes, the Materials Section will provide recommendations on percentages. If asphalt quantities are based on rounded quantities of base or pavement quantities, very little additional rounding is necessary. Rounding to an even 5 or 10 metric tons is usually sufficient.

- **Section 408.— Cold Recycled Asphalt Base Course.** The measurement for this section is metric ton or square meter. Compute metric tons according to the guidance under Sections 401 through 407. For square meters, use length times width, and show the exact limits used in the computations on the typical sections. Only a minor allowance should be used with square meters. Round up to an even 1000 square meters for the bid schedule.

- **Section 409.— Asphalt Surface Treatment.** Measurement is by the metric ton or cubic meter under this section. Compute the quantities on the basis of the application rates listed in the FP. Round aggregate quantities up to an even 100 or 500 metric tons or an even 50 or 100 cubic meters for the bid schedule. Round asphalt to the even 10 metric tons for the bid schedule.

- **Section 410.— Slurry Seal.** Measurement is by the square meter. Round quantities according to Section 408 above. The quantities of aggregate and asphalt should be calculated for the unit price analysis unless there is a good bid history of average bid prices.

- **Section 411.— Asphalt Prime Coat.** Measurement under this section is metric ton, liter, and cubic meter. Compute the quantity of asphalt using an application rate of 0.1.5 L/m^2 for cut-back asphalt, and 1.1 L/m^2 for emulsified asphalt. To convert liters to metric tons, use 1040 L/t for cut-backs and 1000 L/t for emulsion. Round to an even 10 metric tons or 5000 L for the bid schedule.

  For blotter material, use 10-14 kg/m^2. If an inverted prime is desired, use 19 kg/m^2. Round to an even 10 or 100 metric tons for the bid schedule.

- **Section 412.— Asphalt Tack Coat.** Measurement is based on metric ton or liter. Use an application rate of 0.35 L/m^2 for plan quantities. Round to an even 5 or 10 metric tons or 5000 liters for the bid schedule.

- **Section 413.— Asphalt Pavement Milling.** Measurement is based on square meter or kilometer. Round square meter up to an even 1000 in the bid schedule. Round length to 0.01 kilometer.

- **Section 414.— Asphalt Pavement Crack and Joint Sealing.** Measurement is based on liter, kilogram, and meter. It is difficult to estimate the exact amount of work that will be required in the field under this section. Be liberal in making the estimate of work so only minimal, if any, rounding is required for the bid schedule quantity.

- **Section 415.— Paving Geotextiles.** Measurement is based on square meter and metric ton. Be liberal in estimating the quantities of work so only minimal, if any, rounding is required for the bid schedule quantity.

g. Division 500 Portland Cement Concrete Pavement.

- **Section 501.— Portland Cement Concrete Pavement.** Measurement is based on the square meter. Compute quantities fairly accurately for this work so rounding should be minimal.

- **Section 502.— Portland Cement Concrete Pavement Restoration.** This is a catch-all section for repair of concrete pavement. There is a tendency to be conservative in estimating this type of work. Therefore, assume a generous amount of work and use only minor rounding for bid schedule quantities.

- **Section 503.— Portland Cement Concrete Base Course.** Follow the guidance under Section 501.

h. Division 550 Bridge Construction.

- **Section 551.— Driven Piles Through Section 565.— Drilled Shafts.** This portion of the FP-96 contains the bridge construction work items. The Structure Section generally determines bridge work items and their respective quantities. The Structure Section will provide the items of work, the quantity of work, and the estimated cost for the work for inclusion into the contract package.

  Insert the costs provided by the Structure Section into the engineer's estimate system. Allowances are not usually added to bridge items.

i. Division 600 Incidental Construction.

- **Section 601.— Minor Concrete Structures.** For cubic meter measurement, compute the volumes either from rates on standard plans or manually compute the quantities to the nearest 0.1 cubic meter. Add an allowance to round the bid schedule amount to an even cubic meter. Round square meter measurements to the nearest 1, 5, or 10 units.

  Where concrete is not measured for payment directly, estimate the quantity and show it on the plans for the benefit of the bidders. With footings, uniform height walls, etc., showing concrete quantities per meter to 3 decimal places will assist bidders.

- **Section 602.— Culverts and Drains.** List all culverts on the Drainage Summary Sheet. Show the pipe sizes, lengths, and sections, bevels, structure excavation, acceptable alternates, etc. Add a cross section to the plans for pipe larger than 1200 millimeters in diameter or equivalent diameter showing inlet and outlet elevation, design Q, end treatments, flow grade line, energy dissipators, etc.

  Small size culverts for approach roads and for cross-drains should have an allowance due to normal changes that occur in the field during staking and construction. The allowance depends on the type of construction, terrain, and rainfall in the area, so use engineering judgement. No allowance is necessary for larger culverts.

- **Section 603.— Structural Plate Structures.** These structures have site specific designs. The design is the responsibility of the Hydraulics Unit and their criteria should be incorporated into the plans. No allowance is necessary under this section.

- **Section 604.— Manholes, Inlets, and Catch Basins.** The location, size, type, etc., should show on the plans and on the Drainage Summary. These items require special drawings or standard plans. In many instances the roadway owning agency will request that their standards be used for consistency with their highway system. No allowance is necessary under this section.

- **Section 605.— Underdrains, Sheet Drains, and Pavement Edge Drains.** The pay item for perforated underdrain may be modified to include the geotextile and the backfill. An allowance is appropriate for underdrain.

- **Section 617.— Guardrail.** Compute lengths of W-beam guardrail for individual locations in multiples of 3.81 meters. Round the quantity to an even 5, 10, or 25 meters. Guardrail is generally shown in a table on a separate plan sheet but it is permissible to show it in a straight line diagram along the top of the profile section of the plan sheets.

  Prepare a table for the supporting data showing station to station, guardrail left or right, lenght in meters, terminal section type, etc.

- **Section 618.— Concrete Barriers and Precast Guardwalls.** Compute cast in place or slip form barriers to the nearest meter and round for the bid schedule. Precast barriers should be computed in multiples of the length specified for the precast unit; normally 3 meters. Show this work should show on the plans and in the supporting data as indicated under Section 617.

- **Section 619.— Fences, Gates, and Cattle Guards.** Measurement of fencing is generally by the meter of slope measurement. Compute the horizontal length of fencing along the proposed fence alignment and adjust this length for the average slope of the ground.

  Fencing usually shows on a tabulated format or on a separate plan sheet. The proposed fence may also show on the plans by a straight line at the top of the profile on the plan-profile sheets, with the type and length of fence labeled.

  The supporting data sheet should have a table showing fencing by station to station, left or right, and horizontal length.

  To the plan total, add an appropriate allowance to bring the bid schedule to an even 10, 50, or 100 meters.

  Show proposed gates on the straight line with the fence at the top of plan-profile sheet or tabulated on a separate plan sheet.

  Show cattle guards on the plan with a note indicating station, type, length, and the appropriate references to standard plans.

- **Section 622.— Rental Equipment.** Approach the work under this section similar to work under a lump sum item. Determine what work is required under equipment rental and then determine the size and type of equipment needed to do the work. Try to specify equipment type and size that is common to the work required for the remainder of the contract.

- **Section 623.— General Labor.** Determine the work required under this section and estimate the number of hours that it takes to accomplish the work. The Means Heavy Construction Cost Data Book provides crew sizes and hours to perform several hundred different tasks. It is a good reference if there is no history for the specific work desired under this section. The cost data book is on file in the Technical Services Engineer's office.

- **Section 624.— Topsoil.** Usually the design quantity depends on the availability of topsoil on the project within cut and fill limits. This is often an insufficient quantity to topsoil the whole project, so the plans should show which slopes are to receive topsoil. The topsoil is normally placed in 75 to 100 millimeters loose depth on flatter slopes (flatter than 1:1.75) Specify the depth on the typical section sheet or on a special landscape drawing.

  Where conserving topsoil from roadway excavation or beneath embankment areas, remember to replace the material removed and used for topsoil by roadway excavation. Make the appropriate grade or slope changes to compensate for the removed topsoil.

- **Section 625.— Turf Establishment.** The Design programs compute quantities for areas to be seeded on the mainline. For isolated areas and areas of old roadway obliteration, manually compute the areas by multiplying average widths (m) by average lengths (m) and dividing by 10 000 to obtain hectares. Where using slurry units, assume 10 slurry units per hectare. Seeding may be shown on the plans at the bottom of the profile at regular intervals, by sheet total, or by tabulation on separate plan sheets. Plan quantities should be shown in even units. Round the plan total by adding a small allowance to bring the bid schedule to an even hectare. Round slurry units to 10 units.

- **Section 633.— Permanent Traffic Control.** Show sign location, MUTCD number, legend, size, area (square meters), and post size on the plans. Tables summarizing sign quantities should show on the plans. The supporting data sheet may refer to the tables on the plans.

  Delineators are generally shown with a straight-line diagram or a computer plot of the alignment on a scale that will fit on a plan sheet. Use symbols to indicate locations of posts left and right. The diagram used is acceptable as the supporting data sheet. To determine the spacing of delineators, refer to standard plans or to the MUTCD section on traffic markings. Little or no allowance is added to the plan total for delineators.

- **Section 634.— Permanent Pavement Markings.** Show traffic markings on the plans either by line diagrams for the entire project or by tables. Specify the beginning and ending stations of no-passing stripes and the total quantities of broken and solid striping. Round plan totals by adding an allowance that is appropriate to cover connections and intersections. The supporting data sheet may refer to the plans.

- **Section 635.— Temporary Traffic Control.** Show all 635 items on traffic control plans. Identify the locations for installing construction signs and specify the uses for the barricades, cones, and warning lights shown. Quantities for traffic control devices are summarized on the traffic control plans or on separate plan sheets.

  See Chapter 8 for traffic control plan details. Where extensive detours are required, show the design alignment, grade, and surfacing requirements on the plans.

  After determining the contract time and number of days for major work, compute flagging hours and pilot cars hours. Supporting data sheets for other traffic control items may refer to the plans and show on one sheet.

These guidelines do not cover all the sections of the FP. Do not hesitate to ask for directions on any work involved in the contract, including acceptable methods of computation of quantities.

2. Computation of Contract Time. Designers must allow reasonable times for completion of construction projects. Factors that determine contract time include materials, equipment, manpower, costs, and constraints (such as weather, regulations, traffic, utilities, and user convenience).

Under the current standard specifications, contract time may be based either on a calendar day or be a fixed completion date. Generally specify contract time on a calendar day basis.

There are four basic methods of determining contract time that are in general use throughout the highway industry. They are as follows:

a. Construction Season Limits. The contract time ends at, or shortly following, the end of the construction season. This is a very effective approach on surfacing and paving projects, small bridges, and similar types of construction. The contract time must begin early in the year to ensure materials are available and time frames are reasonable.

b. Quantity or Production Rates. This method determines contract time by allowing a daily production rate for each controlling item of work in the contract that significantly affects the project time. The concept could allow time for every item of work, but this is generally not necessary as many minor items are completed concurrently with the more costly items of work. Experience and past data from completed projects helps in establishing the production rates used.

c. Work Flow Techniques. Determining contract time under this method involves preparation of a bar or progress chart on normal projects to developing full critical path method (CPM) analysis on large, complicated projects. A CPM plan requires extensive coordination of materials, equipment, personnel, and administrative support. The more complicated this technique becomes, the more dependent it is on experience, judgment, and data sources.

d. Estimated Costs. Under this method of determining contract time, the contract costs relate to time or working days (e.g., contractor expected to earn $15,000 per working day over life of the contract). Using this method requires an accurate and current data base.

Any or all of the above methods are acceptable. It is not unusual to combine a bar time chart with production rate analysis on a project. The designer should use the method or combination of methods that are most practical using the data bases available.

3. Development of Prices. The engineer's estimate shall reflect the actual cost to the contractor of doing business, including a reasonable profit. There are two methods commonly used to determine this cost; historical costs (bid based estimating) and actual costs (cost based estimating). With either method, the designer shall strive to target the expected low bid.

a) Bid-Based Estimating. This method uses historical bid data as a basis for estimating current costs. Low bids received for projects (within the past 2 to 5 years) under similar conditions usually represent the contractor's cost plus a reasonable profit for those projects. The low bid is generally the best indicator of the expected actual cost for a project. The average of the low bids received on previous projects in similar locations should be the basis for current projects.

Each Engineer's Estimating software in each Federal Lands Highway Division office provides a listing of unit bid prices on contract items from previous projects. Generally only the low bid on each similar project should be used to develop unit prices (average bids inflate prices above the low bid). However, the bids from the lowest three bidders are generally considered to insure the low bid is reasonable. The designer should use these prices and modify them to fit the conditions on the project. Allow for any factors that may have a direct bearing on the prices. These would include such factors as availability of construction material; proximity of access roads; railroads, distance from towns, traffic, time of construction, inflation, quantities etc. The historical bid price approach, tempered with engineering judgment, works quite well with almost all the minor items of work on a project.

b) Cost-Based Estimating. Some items of work that may not lend themselves to the average bid price approach are major items of work such as roadway excavation, base and plant mix material, and bridge material. These items require a supporting analysis to ensure that all factors that bear on the cost of the item receive consideration. Cost based estimating uses current labor, equipment, and materials costs as well as overhead and profit to develop unit prices.

The following are important steps in developing prices for cost estimating:

- Determine if the proposed unit prices are realistic for the location, time of year, and characteristics of the work to be performed. Support unit prices for major items of work by an analysis prepared in sufficient detail to ensure that all factors that bear on the cost of the item have been considered. Estimated unit prices are generally based on historical data such as the unit prices used for previous estimates and the corresponding bid prices on previous contracts. Review these prices at regular intervals to determine if pricing changes are needed to reflect current trends.

- Consider factors that can affect the estimated cost of a project, such as labor rates, equipment rates, unusually large quantities, interest rates, time allowance, competition levels, and material shortages. Adjust any historical prices accordingly.

- Confirm that the bid data prices to be used are current. Update if necessary.

- Document the methods and assumptions used to establish each unit price. The bid evaluation process will rely heavily upon this documentation to determine if all factors effecting the reasonableness of the bid have been considered.

K. Specifications. Specifications are the compilation of directions, provisions, and requirements about the quality and performance of the work. They should describe the work with clarity and precision and have a clear logical format.

Specifications should not specify impossibilities, near impossibilities, or contain unenforceable requirements. When ideal conditions cannot be obtained, specify tolerances to permit acceptable variations in the work.

All specifications fall into three general categories:

- Performance or end result specifications. These specifications give the contractor the entire responsibility for supplying an item or a product for construction that meets the specification requirements. The specification generally places no restrictions on the materials used or the methods of incorporating them into the completed work. This type of specification is suitable for use when the end product is measurable, when a quick method of testing is available, and when deficiencies are correctable by reprocessing or reworking.

- Materials and methods specifications. These specifications are suitable for use when the end product characteristics are unknown or are not measurable. They also apply when no quick method of acceptance test is available, or it is impractical to remove and replace the defective work. Use of these specifications directs the contractor to combine specified materials in definite proportions using approved equipment or to place a specified material or product in a specified way. Normally, the operations are always under Government supervision and control.

- Restricted performance specifications. These specifications are the most widely used type. They allow the contractor the fullest possible latitude in obtaining the desired end result as stated in the contract. However, they contain certain restrictions to ensure an acceptable level of quality and prevent the construction or production of a large quantity of defective work. In most cases, restrictions on a performance specification shall not relieve a contractor of all responsibility. These specifications ensure a minimum acceptable quality and they also give the contracting officer (CO) some basis on which to administer the contract and accept the work.

1. Types of Specifications. Under the three general categories, there are three distinct types of specifications used by Federal Lands Highway Division offices for contracts, and each has its place in the hierarchy of contract documents.

- Standard Specifications. The Standard Specifications for Construction of Roads and Bridges on Federal Highway Projects approved for general application and repetitive use.

- Supplemental Specifications. Additions and revisions to the standard specifications.

- Special Contract Requirements. Additions and revisions to the standard and supplemental specifications applicable to and individual project.

See the glossary in Chapter 1 for their definitions, relationship with each other, and interaction with the other parts of a contract.

The FLH Specification Coordination Group (SCG) is responsible for the maintaining and updating of the Standard Specifications (current edition is the FP-96). FLHO will issue supplemental specifications, which are to be incorporated in all applicable FLH contracts until such time as the supplemental specifications are included in a standard specification update. The designer is responsible for the initial preparation of all special contract requirements relating to conditions peculiar to an individual project. Special contract requirements are specifications which add to, delete, modify or revise the standard or supplemental specifications. This section will describe the methods and techniques for developing and writing special contract requirements.

The contract specifications will sometimes refer to a specification, standard, or test method adopted by a recognized technical association. Some of the recognized associations follow:

- American Association of State Highway and Transportation Officials (AASHTO).
- American National Standards Institute (ANSI).
- Association of Official Agricultural Chemists (AOAC).
- American Road and Transportation Builders Association (ARTBA).
- American Society for Testing and Materials (ASTM).
- American Wood Preservers Association (AWPA).
- American Welding Society (AWS).
- American Water Works Association (AWWA).

Occasionally a contract may use State transportation agency specifications. This can range from total use of State specifications to allowing some State-specified methods or products to be acceptable alternatives to Federal requirements.

Government specifications and standards used by reference include the following:

- Federal specifications and standards approved for use by the General Services Administration.
- Voluntary products standards published by the National Institute of Standards and Technology, U.S. Department of Commerce. Standards published before 1966 are referred to as "Commodity Standards" or "Simplified Practice Recommendations."
- Military standards approved for use by the U.S. Department of Defense.

When the contract lists or refers to a specification, standard, or test method of an accepted association or other government agency, the specification, standard, or test method cited becomes a part of the contract. Citing such documents has the same legal effect as though every word of the specification, standard, or test method had been written in the contract.

Make sure that specifications incorporated into the contract by reference do not conflict with other contract documents.

2. Developing Special Contract Requirements. These requirements cover additions and revisions to the standard or supplemental specifications. Begin by making a thorough analysis of the material, process, or work proposed in the contract.

Assemble existing specifications prepared for the same or similar subject, and obtain specifications for materials and processes prepared by standardizing organizations or State agencies. A study will reduce the time needed for research and preparation of the specifications.

If possible, do not specify brand name or proprietary products. When brand names or proprietary items have to be specified, list a minimum of three acceptable sources for the material or product desired. Sole source procurement is to be avoided. Cover the important properties of materials but do not load the specifications with minor restrictions which may be difficult or impossible to meet.

Specifications from national technical associations are a valuable source of authoritative information. When specifying standards or test methods, identify them by their identification number such as ASTM A 307, AASHTO T 27, AASHTO M 31M, or Federal Specification TT-P-641. Do not include the year portion of the identification number. (Example: When specifying AASHTO T 27-87I use AASHTO T 27 and drop the 87I which says the specification is an interim specification adopted for use in 1987.) An "M" after the standard number indicates a metric specification and should be included in the reference.

A reference made to a specification, standard or test method adopted by AASHTO, ASTM, GSA, or other recognized national technical association, means the approved procedures that are in effect on the date of the contract solicitation.

When adopting requirements taken from other specifications, make sure they are appropriate for the conditions in the current project. The use of a specification on a previous project does not mean it will be satisfactory for the present project. Check the criteria to make sure it is relevant, realistic and applicable for the proposed project. Study every specification to eliminate nonessential requirements and to permit the use of new types of materials, methods or equipment. Do not repeat specification requirements for emphasis. State them firmly and only once.

Do not specifically exclude recycled materials. Recycled materials should be allowed to compete with virgin materials at least on an equal basis. In some cases, recycled materials may be encouraged by providing incentives or relaxed specification limits.

3. Writing Special Contract Requirements. Use the general format for the standard specifications when writing specifications for a new item. Most standard specification sections (except Divisions 100, General Requirements and Division 700, Material) have five major subsections.

- Description. This contains a short condensed statement of the work required. It may include a list of designations, which may be specified in the pay items. Do not use words such as "in accordance with these specifications and in reasonably close conformity with the lines, grades, thickness, and typical cross section shown on the plans or established by the CO."

- Material. Use this subsection to list the materials for the work and their applicable specifications. Wherever possible the Materials subsection should simply consist of an alphabetical listing of materials and references in tabular form. References are usually made to other sections or subsections in the contract specification or applicable specifications for materials as contained in AASHTO, ASTM, etc. The method(s) of sampling and testing and applicable acceptance procedures should be included in the acceptance subsection under Construction Requirements.

- Construction Requirements. Describe the sequence of construction operations, special equipment, controls, limitations, tolerances, and acceptance criteria in chronological order. Use multiple subsections with subheadings.

  Use imperative mood, active voice whenever possible. Instead of saying, "The Contractor shall build the road." or "The road shall be built." say "Build the road." In sentences using the imperative mood, the subject, the Contractor, is implied. Actions of the Government should be written in the active voice using the work "will." For example, " The Government will approve the road." Subsection 101.01 of the FP makes this interpretation a part of FLH contracts.

  Use sufficient specification requirements to ensure quality of workmanship and satisfactory completion of the work. Minimize specific requirements about methods and equipment to permit improved equipment and to encourage contractors to apply new and advanced ideas and methods in construction. Specify the allowable tolerances and applied penalties, if any, for exceeding these tolerances.

  The last subsection under Construction Requirements is used to describe how the work under that Section will be accepted. This usually includes references to the following four methods of acceptance: Subsection 106.02, Visual Inspection; subsection 106.04, Certification of Compliance; Subsection 106.04, Measured or Tested Conformance; or subsection 106.05, Statistical Evaluation of Work and Determination of Pay Factor (Value of Work).

- Measurement. Since the Contractor performs the measurement under FLH contracts, use the active voice, imperative mood. Specify the components of the completed work item to be measured for payment and the units of measurement to be used. Use the measurement terms and definitions contained in Subsection 109.02 of the FP. Establish where, when and how to measure the work item. List any exception that will or will not be included in the measurements.

- Payment. This subsection should consist of the following wording: "The accepted quantity, measured as provided above, will be paid at the contract price per unit of measurement for the pay items listed below that are shown in the bid schedule. Payment will be full compensation for the work prescribed in this Section. See Subsection 109.05." followed by a list of the pay item numbers, names, and corresponding pay units.

  Pay items with their unit bid prices subject to adjustment under Subsection 106.05 should be included as exceptions in the above paragraph. The subsection will also need to describe the method for adjusting the contract unit bid price.

  Subsection 109.05, Scope of Payment, includes the general rules for measurement and payment of work. There is no need to restate these rules in each individual Section. However, all exceptions or needed clarifications of these rules should be stated in the Measurement or Payment subsections of the individual Section.

When writing a special contract requirement which adds to a standard specification, use the following phrase:

Subsection ( ) is supplemented as follows:

When writing a special contract requirement to delete a standard specification for a contract, use the following phrase:

Subsection ( ) is deleted.

When writing a special contract requirement to replace or modify a standard specification, use the one of the following phrases:

Delete Subsection ( ) and substitute the following.

Subsection ( ) is amended as follows:

a. Fairness. Specifications should not place all the risk of construction on the contractor. To do so will, in all probability, result in high bid prices. Omissions, ambiguities, or inconsistencies in the plans or specifications are not the responsibility of the contractor.

Direct reference to proprietary specifications of national, regional, or local trade associations (Western Pine Association, etc.) have no place in the specifications. Proprietary specifications are subject to change without notice to or acceptance by FHWA.

Avoid the use of trade names in specifications and on plans. Instead, formulate specifications to obtain the desired results and assure full competition among equivalent materials, equipment, and methods. The Federal Acquisition Regulations (FARs) do not permit reference in specifications and on plans to single trade name materials (also refer to 23 CFR 635.411). In exceptional cases, however, the use of trade name designations is acceptable. These cases require a listing of all, or at least a reasonable number of acceptable materials or products. Generally, list at least three trade names.

A project may require a specific material or product, even though there are other acceptable materials and products. This is an acceptable procedure if the Division Engineer approves the choice as being in the public interest.

A specification should clearly state the contractor's obligations and known risk. No specification should try to get something for nothing from a contractor by concealing its intent.

b. Clearness. Write all specifications in a simple and concise style. Use short sentences, use words in their exact meaning, avoid multi-syllable words, and be careful in the use of punctuation and pronouns. Avoid the use of indefinite words and phrases. Each word, each phrase, and each sentence in a specification should clearly convey the same meaning to every reader.

The specification shall describe the work with clarity and precision to prevent different interpretations by the contractor and the CO. Never put anything in the specification that you do not expect to enforce.

Avoid expressing more than one thought in a sentence since this leads to confusion. If a good technical word will clearly describe the idea to the contractor, use it exclusively. Do not use synonyms for literary effect. Always use words in their true dictionary or technical meaning. Colloquialisms and slang expressions have no place in specifications. Syntax, the orderly or systematic arrangement of words or phrases in a sentence, is very important and the established usage should be maintained.

Punctuate carefully. Recast the sentence if a change in punctuation might change the meaning. The purpose and effect of the specification should be clear from its language and the language should convey only one meaning.

Use all the words you need to convey clear and correct messages, but use no more. The choice of words is important. They should be plain and well understood.

Table 9-15 is a listing of words and phrases to avoid when writing specifications.

Table 9-15
Correct Usage of Words and Phrases

Do not use	Use
Any	All
In the event that	If or when
It is intended	Shall
Subsequent to	After
In order to	To
It shall be incumbent upon	Shall
It shall be the responsibility of the contractor	The contractor shall
It shall be the duty	Shall
Is hereby authorized	May
For the purpose of	For
Must	Shall
If the contractor so elects he may	The contractor may
At the option of the contractor	The contractor may
Is hereby amended	Is amended
Is hereby deleted	Is deleted
By means of	By
Absolutely essential	Essential
Enclosed herewith	Enclosed
At a later date	Later
Prior to	Before
In accordance with	by, under, according to
Through the use of	By
Until such time	Until
In order to	To
Engineer	Contracting officer (CO)

In addition to the words and phrases listed in Table 9-15, use the following words in the proper context:

- Shall/Will. Use shall when the contractor is the subject of a command or order. Better yet, use the imperative mood, active voice to avoid the use of "shall." Use "will" when the Government or CO is the subject.

- May. Use may when either the contractor or Government is the subject and either or both have options or alternatives.

- Amount/Quantity. Use amount when money is the subject. Use quantity when volume, mass, or other unit of measurement is the subject.

- Bidder/contractor. Do not use bidder in the specifications. Use contractor exclusively. Bidder is reserved for use in the Notice to Bidders, press releases, amendments, and other similar nonspecification portions.

Do not use the words said, same, aforesaid, hereinabove, hereinafter, former, latter, whatsoever, or similar words of reference or emphasis. Do not use the expressions and/or, as per, or etc.

Avoid such terms as "as directed by the CO", "to the satisfaction of the engineer", or "satisfactory to the engineer". This type of phrase may be used sparingly, such as in unit price items where action taken by the CO will definitely not involve changes in cost to the contractor.

c. Completeness. Each specification must be complete and shall complement and substantiate the applicable typical sections, dimensions, and details shown on the plans. The specification should furnish all information necessary to enable a bidder to prepare a complete and responsible bid and to enable the contractor to construct the project properly. The specification should never fail to give the bidders and the contractor explicit and definite instructions. However, there is no place in a specification for instructions to the CO.

Do not attempt to explain the reasons for requirements. This information or instructions associated with the enforcement of specifications properly belongs in the construction manual or in a design narrative and not in the specifications.

Specifications should specify materials, construction methods, sequence of work, the method of measurement, and the basis of payment. Notes on the plans should explain and clarify the design features. Cover a requirement only once. Information or data that is shown on the plans should not show in the specifications.

There should be no uncertainty by the contractor or CO about the desired quality or acceptability of the work. Use only essential facts, essential words, and essential phrases. Omit needless words and phrases. If a word has the same meaning as a phrase, use the word.

d. Correctness. Specifications should be accurate and factual. Sources of data used in the specification must be reliable and current. Careless statements or statements based on unreliable data are frequently the cause of contract administration problems and contractor's claims. Legalistic words and phrases may shorten or clarify specifications, but be sure that usage is correct and that alternate interpretations cannot contradict the intended meaning.

There are many publications available for providing instruction on the preparation of specifications. The majority of the standard specifications begin as special requirements which gradually change through use until the intent and meaning is the same to both the contractor and CO.

A good guide for determining the success of a specification is to review the bid tabulations for the item in question. When the range of bidding is close, it indicates that all contractors are reading the specification in the same context. Conversely, a wide range of bidding may indicate confusion and ambiguity in the specification.

L. Contract Assembly. The contract assembly, often called solicitation package, is the end product of the designers efforts. The PS&E package is an integral part of this assembly. Before the Federal Lands Highway Division offices can solicit bids for a construction contract, they need to describe the articles, works, or services for a desired bid. This involves preparing plan drawings, (supplemented by specifications and a schedule of quantities) and combining them with appropriate regulations and clauses into a contract assembly.

A contract assembly or solicitation package consists of several main parts:

1. Solicitation, Offer, and Award (SF 1442). This contract form, after being signed by the contractor and CO, consummates the contract and makes it legal and binding on all parties.

2. Solicitation Provisions. The Federal Acquisition Regulations (FAR) define the scope of the contract and sets forth bidding requirements.

3. Bid Schedule. A list of all pay items in the contract to be completed by bidders with their offered bid prices for the work. The bid schedule is prepared from data obtained from the engineer's estimate.

4. Contract Construction Clauses. FAR clauses regulating and controlling contractor construction activities.

5. Labor Standard Clauses. All laborers and mechanics working on the project are covered by Federal regulations (Davis-Bacon Act) that includes a minimum wage schedule.

6. Special Contract Requirements. The amendments and supplements to the standard specifications necessary for the construction of the project.

7. Plans and Drawings. The plans and drawings necessary to detail and identify the work. These include standard plans and special drawings that may be applicable.

The Federal Lands Highway offices use these seven subdivisions in their contract solicitations (advertised or negotiated). The solicitation generally contains all the necessary forms and contract documents that a bidder needs to make the government an offer for the construction of the highway facility.

9.5 APPROVALS

FLHM 1-A-2 outlines the roles and responsibilities of the Federal Lands Highway offices at the Headquarters and Division levels for carrying out the Federal Lands Highway Program. FLHM 1-A-3 establishes the line of delegation for approval authority.

9.6 STANDARD FORMAT

A. Plans. Project plans as described under Section 9.4.I should be prepared using the guidance provided in this section. Following these guides will produce plan sheets that are accurate, neat, presentable, and that will reproduce legibly.

The following sections detail the format, drafting standards, and organization of the plan sheets into a PS&E assembly.

1. Format. All plan sheets should be prepared using a CADD system. There may be some exceptions, e.g., conceptual drawing, architectural renditions, emergency projects, etc., to accommodate special needs of internal sections or cooperating agencies, but these should be few in number. When manual drafting becomes necessary, it should be accomplished in a manner that duplicates the appearance of CADD drafting to the extent possible.

Exhibits No. 9.22A through 9.37 were prepared using MicroStation version 5 software on an Intergraph CADD System. In addition to illustrating an acceptable format for plan sheets, the exhibits show, with the use of a hand-shaped symbol, the recommended fonts (FT), text sizes (TX), line style (LC), and weights (WT) to use in the preparation of the graphics. Lettering is shown in font 23 or 24 italics and font 1 or 2 vertical. Text size in shown in millimeters. Line weights vary from 0 = 0.13 millimeters to 6 = 1.00 millimeters. The exhibits were prepared using italic lettering for instructions and data relating to the construction of the project. Vertical lettering was used to indicate existing conditions. The only exception to this criteria is that streams, rivers, and lakes are always shown in vertical lettering. Backward italic lettering is used to show information about the development of the sheet.

When other software or hardware systems are used, the line weights, line styles, text size, text style, and cell names will vary from that shown on the exhibits. The Intergraph System with MicroStation version 5 and subsequent versions permits many other changes the characteristics of the fonts, sizes, and weights. The plan preparer should match the exhibit plan sheets as closely as possible by following the guidance provided in Table 9-16.

The plan sheets in the exhibits state whether the graphics were prepared on 864 by 558-millimeter plan sheets or 432 by 279-millimeter plan sheets. Using the fonts, text and line criteria shown will result in uniform sizes and weights on the 432 by 279-millimeter plans sent out to potential bidders.

2. Drafting Standards. The use of drafting standards establishes uniformity and quality in the drafting of contract plans.

When a CADD system is used to develop plans, the dexterity of a manual drafter is no longer critical; letter spacing is correct and lines are uniform throughout their lengths. However, a CADD system operator must have the same knowledge of drawing layout and detailing as a manual drafter to produce a good drawing. The CADD operator must use care in laying out details when placing text on a plan sheet. The relationship between the text and what it applies to must be clear.

Notes on plan drawings should clarify the drawing and provide necessary information for a complete understanding of the work. Notes shall be clear, concise, descriptive, and as brief as possible to convey the message. Plan drawings shall not include instructions covered in the specifications.

CADD text shall be in the correct style and at the size specified in Table 9-16. Proper spacing between figures, symbols, and words will assure clarity, improve neatness, and increase accuracy.

In line work, the operator must select the correct line style, and weight and use them in the correct relationship to other lines on the plans. The CADD system will NOT automatically perform this work. The system reacts to instructions. The operator must know what is needed and how to direct the CADD system.

Drafting details that enhance the uniformity and consistency of plan preparation include:

- Do not go overboard on line weights. Make a good, clear delineation of all lines so the proposed work will stand out in contrast to existing features. Do not make line weights so bold that they resemble a border line.

- Do not use "station" as a prefix to station numbers. Any numbering including a plus sign (for example 2+959) is understood to be a station number.

- When placing text on plan sheets, do not crowd other information. Carefully choose a place for the notes that is as close as possible to the point of application.

- Do not use broad triangles instead of arrowheads for cross-section indicators. Place the section letters at the end of the arrows, not on one side.

- Do not use the letters "I," "O," "N," or "Z" as cross-section indicators. I and O resemble symbols shown on drawings and N and Z are the same shape, but oriented 90 degrees. When you reach the end of the alphabet, use AA, BB, etc.

- Do not draw hidden contours under a structure with long dashes. Make dashes 3 millimeters long with 1.5 millimeter spaces between. Show hidden lines of structures with the same symbol.

- Avoid running hatching, lines, or patterning through words or figures. Do not use the border lines of the sheets as a basis for establishing angle of parallel hatching lines. Gradually change the direction of hatching at angle points in the section to maintain a 45 degree angle with the neat line of the structure.

- Use abbreviations on plan and profile sheets only where there is not enough space to spell out the word. In instances where the meaning of an abbreviation appears doubtful, the word should be spelled out.

- Do not capitalize abbreviations unless the word or words represented are ordinarily capitalized, or unless the abbreviation itself has become established as a capital letter, such as N for north.

- A period usually follows each part of an abbreviation that represents a single word. This aids in quick interpretation of an abbreviation, such as "a.m.", not "am". The exception to a period following an abbreviation is with units of measure where periods are not used.

The abbreviations in Exhibit 9.23 have been adopted for use on plan sheets.

Deviations are acceptable provided basic drafting practices are followed, and the deviation will improve the drawings. There are situations where the size and weights need to be adjusted to emphasize or clarify specific information on a plan sheet. For example, centerline stationing along the plan alignment may require a heavier weight for clarity where culture or other background data tends to clutter up a drawing.

Table 9-16
Lettering Sizes And Styles

Subject[1]	Size			
	CADD Size & Weight[2]	Freehand Guide No.	LeRoy Guide and Pen No.	Style[3]
Index contours (brown)	3.0-0		120-0	S
Intermediate contours (orange)	2.5-0		100-00	S
Supplemental contours (orange)	2.5-0		100-00	S
Grid values (green)	2.5-0	3	100-00	V
Triangulation & traverse stations	3.0-0		120-0	V
P-lines (red)	2.5-0	3	100-00	S
Bench marks	2.5-0	4	100-0	V
Spot elevations	2.0-0		080-00	V
Highways (U.S., State)	2.5-0	3	100-00	V
Railroads (names)	3.0-0	4	120-0	VU
Major bodies of water (blue)	3.5-1	5½	175-1	SU
Minor bodies of water (blue)	3.0-0	4½	140-0	SUL
State names	6.0-2		240-2	VU
County names	5.0-1		200-2	VU
Township & range nos. along line	3.5-1		175-1	V
Section numbers[4]	3.0-1		140-1	V
Property ownership	3.0-0		140-0	VU
City street names	3.0-1		175-1	VU
Photo center numbers	2.0-0		080-00	V
Additional names & identification	2.5-0	3	100-00	VUL
Curve data (PS, PSC, etc.)	3.5-1	5½	140-1	SU
Bearings	3.5-1	5½	140-1	VU
Centerline stationing	4.5-1		140-1	VU
Culverts	3.5-0	4½	140-0	SUL
Quantities	3.5-1	5½	175-1	V
R/W	2.0-0	4	100-00	S
Forest names (subdivision names)	7.5-3		290-3	V

Note: [1]Color is black unless otherwise noted.

[2]Approximate weights
0= 0.13 mm 1 = 0.25 mm 2 = 0.38 mm 3 = 0.50 mm

[3]Lettering style code:
S = Slant (italics) U = Upper Case V = Vertical L = Lower Case

[4]Section Numbers. When required to delineate a portion of a parcel of land, use 3.5-1 upper and lower case, e.g. "NE 1/2 SECTION 17 North of Highway".

3. Organization of Plans. The FAPG, Subchapter G, Part 630, Subpart B provides guidelines in the preparation of plans, specifications, and estimates. The guidelines are presented in a non-regulatory supplement attachment to Part B.

The guidelines in the FAPG list the following 12 subject areas for the arrangement of plan sheets in the preparation of a set of contract plans.

a. Title Sheet
b. Typical Section
c. Summary of Quantities
d. Tabulation of Quantities
e. Plan and Profile
f. Bridges
g. Drainage Facilities
h. Traffic Control Plan
i. Standard Plans and Special Details
j. Environmental Mitigation
k. Cross-Sections
l. Contiguous Projects

The guidelines permit some latitude in the arrangement of plan sheets provided the intent of the plans is clear and meet the criteria of Section 9.4.I of this manual. Designers should decide on an arrangement that best fits their needs within the guidelines.

Exhibits No. 9.22A through 9.37 referred to in this subsection are not mandatory formats. They show an acceptable format for presenting the required information on plan sheets in reasonable accordance with the guidance provided in the FAPG. The drafting on plan sheets prepared as shown in the exhibits will be acceptable to a Division when prepared by a consultant or another Division Office.

The discussion that follows addresses some of the details needed to complete each of the 12 subject areas listed for the arrangement of the plans. For convenience, the discussion will follow the order as listed above.

a. Title Sheet. (See Exhibit 9.22A & 9.22B). Exhibit 9.22A shows a title sheet layout for a typical Forest Highway Project and Exhibit 9.22B shows a title sheet layout for a typical National Park Service Project.

The title sheet serves to identify the location and limits of the project so bidders can find it in the field. Descriptive terms appearing on the title sheet should be readily identifiable by the topography or culture or by use of State highway maps.

The information detailed on Exhibits 9.22A and 9.22B is the basic information to be shown for all projects. Additional details that help to clarify the limits of the work or provide data needed to conveniently bid the work are encouraged. Examples of additional details that may help the bidders include: locations of material sources described in Section 105, locations of disposal areas, staging areas, stockpile sites, and off-project mitigation work.

The FAPG recommends that the scales used on the plans show on the title sheet. Considering the number of scale variations found in a typical project, a scale legend could be confusing and difficult to cross-check. Therefore, the title sheet exhibits show only a bar scale for the map appearing on that sheet, but no scales for the internal sheets.

A completed title sheet contains the following data:

- Proper title and project designation.
- Statement of the project length.
- The State, county, city or town (and where applicable, the national forest, National park, etc.).
- Key map of the State with designator showing project location.
- The location or route map showing project location with beginning and ending stations or termini.
- Index of sheets comprising the plans.
- Design classifications such as the current average daily traffic (ADT), design year ADT, design hourly volume (DHV), directional distribution (D), percent of trucks (T), design speed (V) and maximum superelevation rate (e).
- Distance from the project to nearest city, town, etc.
- Provisions for dates and signatures of the approving officials.
- Standard specifications applicable to the project.

The location or route map should be prepared using a scale ratio of 1:100 000 or larger and show the project area, the nearest towns appearing on a State highway map, other roads, railroads, major streams. etc. In instances where sufficient information cannot be placed on the route map to adequately identify the project work, additional vicinity maps should be prepared on separate sheets and placed following the title sheet.

The large number of symbols and abbreviations used within FLH prohibits the past practice of placing the information on the title sheet. Therefore, the plan symbols and abbreviations sheet was developed (See Exhibit 9.23) and generally follows the title sheet in a set of plans.

When a special symbol is required that is not included in Exhibit 9.23, show it in a legend on either the first plan sheet where the symbol appears or on the left side of the first plan-profile sheet. Abbreviations not shown may be placed on the plans similar to the way symbols are placed or may be added to the contract as a special contract requirement under Subsection 101.03 Abbreviations.

The symbols and abbreviations should not be changed on a project-to-project basis. When a change is required in Exhibit 9.23 to satisfy a Division's needs, change the master file so all future projects will have the same symbols and abbreviations. This prevents the need to check all the data on the sheet for every project.

b. Typical Sections. (See Exhibit 9.25). The typical section shows the shape of the finished surface and shoulders, and represents the appearance of the completed project. It must be specific enough to describe the proposed work, its location, and the material needed.

For combined roadway and bridge projects, the typical section for the bridge may be shown with other bridge design information. All plans should show typical sections for the project including those for bridges only and those where abbreviated plans are used. On projects requiring more than one typical section, the limiting stations for each section should show. This may require additional plan sheets for clarification of the work.

Identify all functional elements of the typical section to a relative scale. Show widths in meters and show thickness or depth in millimeters. Show the thickness of each element in the pavement structure in millimeters.

Where different pavement structure thicknesses are necessary because of differing soil conditions, use notes or tables on the typical section sheet to cover such variations.

For stage construction projects, identify the ultimate typical section. Clearly distinguish the work to be performed under the contract and the future stage construction work.

Include tables or notes to illustrate curve widening, relationship of slope ratios to cut and fill heights, slope rounding, and other special treatments.

Identify the profile grade on the typical section at the point where it is carried relative to superelevation.

Use supplemental typical sections to show variations in special ditches, clearing widths, rock cuts, etc. Also use supplemental typical sections to detail curbs, median treatments, slope protection, channel changes, etc. Place these supplemental typical sections on the typical section sheet or on a following sheet. List the stations where the typical sections apply. Place a note on the plan and profile sheet describing the site-specific work and referencing the appropriate typical section. On abbreviated plans, supplemental typical sections may be placed on the plan sheet at the locations where the work is proposed. See Exhibit 9.36 for examples.

c. Summary of Quantities. (See Exhibit 9.24). The summary of quantities tabulates, combines, and summarizes quantities of the various construction items. This summary informs prospective bidders of where to locate work within the plan sheets, the difference between plan quantities and bid schedule quantities, if any, and expands on contract bid schedule information. It also serves as a helpful checklist to the designer to ensure that all elements of the design receive consideration.

This is generally one of the last plan sheets prepared in final form. All the pay items are listed in numerical order and identified by appropriate descriptions using the engineer's estimate program. The bid schedule quantities duplicate those in the contract. Show any pertinent information by the use of remarks or footnotes at the bottom of the summary plan sheet. Items of work paid for under the contract quantity provision of Section 109 should be identified when preparing the engineer's estimate.

In the preparation of the summary of quantities sheet or the tabulation of quantities sheets, always spell out the pay unit the way it is shown in the FP-96. For example, use Square meter - not Square Meter or Sq. meter. Symbols for pay units are expressed without periods; e.g., m; m^2; kg, etc. Familiarity with the information shown on the plan symbols and abbreviations sheet will improve the consistency of a set of plans.

d. Tabulation of Quantities. A tabulation of quantities sheet consists of a detailed summary of an item of work or several items of work usually presented in a tabular or table format. It provides bidders with more detailed information on the location and extent of the work required than can be shown on the summary of quantities sheet.

(1) Drainage Tabulation. (See Exhibit 9.26). The tabulation of drainage quantities sheet lists all culvert and related drainage data. Show the location of the drainage installation under the station heading. Show related data in the row across the sheet under an appropriate column heading. Total the figures in the various columns to obtain the quantities to show on the summary of quantities sheet for the appropriate culvert item.

The tabulation of drainage quantities sheet may be developed using a spread sheet format. The designer may modify the sheet layout to address specific project requirements.

Exhibit 9.26 shows a summary of drainage quantities sheet that addresses a relatively simple project. Where maximum cover is the controlling factor in acceptable culvert pipe selection, the format shown on the exhibit works well. Where environmental factors control acceptable culvert pipe selection, it may be necessary to modify the spread sheet layout considerably. For instance, a large portion of the sheet may be required to detail the various coating options or thickness options acceptable for a certain pipe installation. A designer may reserve the right hand portion of the sheet for remarks and list acceptable culvert pipe along the bottom of the sheet. The primary purpose of the summary of drainage quantities sheet is to present all available options for potential bidders to evaluate in preparing their estimate for the project.

Where maximum cover is the controlling factor on acceptable culvert pipe, the designer has the option of specifying the thickness, class, or type of culvert on the summary or simply checking off the acceptable column spaces and having the contractor or supplier determine the thickness, class, or type.

(2) Other Tabulations. (See Exhibits 9.27 through 9.32). A tabulation of quantities sheet should be placed as close to the location or description of the work as possible. Use a separate plan sheet for the tables or place the tables on the same sheet as the details for the work. Separate sheets are required when the tabulation is supported by work detailed on FLH standards or Division standard details.

Placing a tabulation of pavement structure quantities table immediately before or on the typical section sheet groups the required work in one location and is easy to comprehend and check. Placing a tabulation of guardrail locations immediately before the standards used for guardrail installation connects the work and location very nicely.

Tabulation of quantity tables placed immediately before the plan-profile sheets for such items of work as removal of individual trees, roadway obliteration, roadway excavation, and turf establishment aids the bidders in precisely locating the work areas and determining the effort required to perform the work. Tabulations for items of work such as guardrail or fences may be placed before the plan-profile sheets or before the special and standard drawings detailing the installation of those work items.

A sheet tabulating all the items required and placed immediately before the detail sheets for a major parking area, a roadside development area, a scenic overlook, or other special work assists bidders as well as internal checking. This also applies to traffic control plans, signing plans, landscaping plans, and other work.

The items and quantities shown on the exhibits are for example purposes only and do not reflect the work shown on the plans. They are intended to show one of several acceptable methods of tabulating the work. The designer may use any format that presents the work items in a clear and concise manner that can be easily checked and verified. The exhibits are grouped in one location instead of being spread through the remaining exhibits for convenience only.

e. Plan and Profile. Under this subject area, the designer may incorporate either contact plan and profile sheets or abbreviated plan sheets.

(1) Plan and Profile. (See Exhibits 9.33 through 9.36). Plan and profile sheets should be prepared at a scale that is adequate to show the necessary details as governed by the topography and the complexity of the work.

Plans usually have a horizontal scale of 1:1000 when prepared on the 864 x 558-millimeter sheet size. Larger or smaller scales can be used depending on the amount of detail to be shown.

Profiles usually have the same horizontal scale as the plan, but the vertical scale should be 5 to 10 times that of the horizontal scale.

When laying out plan and profile sheets, avoid dividing major structures, highway intersections, interchanges, or grade separations between sheets. Use supplemental sheets as necessary to make these drawings as clear as possible.

Leave about 250 millimeters of blank space before the beginning of the project on the first plan-profile sheet and a similar blank space after the end of project on the final plan-profile sheet. Use the blank space on the first plan-profile sheet for project specific legends, utility information and other miscellaneous information beneficial to the contractor. Except for the first and last sheet, attempt to place 700 meters on a sheet and always break sheets at even 100 meter station numbers. Increasing stationing should run from left to right.

Show a prominent **North arrow** for orientation on each sheet.

Show all boundary lines, State, county, city, township, and section lines. Where ties are shown to section corners that fall off the sheet, break the line and show the corner with tie distance. Describe found corners and show their coordinates. At the bottom of the plan portion of the sheet, show township, range, and meridian. Streams, lakes, swamps, estuaries, etc. shall also be shown.

Show the station coordinates of the beginning of the project and the end of the project on the first and final plan-profile sheets, as appropriate. Identify them as State grid, or assumed.

On the first sheet, show the elevation datum, such as USC&GS, USGS, assumed, etc., used for the project.

Show the designed centerline prominently and comply with the following:

- If the designed line (L line) is not staked, show the preliminary control line (P line) as a light line. Label the P line as "Line as staked" and the L line as "Line to be constructed." Where the preliminary control line consists of a series of control points to be used by the contractor during the construction staking operation, label the control points by number and show the coordinates and elevation.

- If the L line is staked, do not show the P line on the plan and profile sheets. Label the L line as "Line as staked and to be constructed." Where control points are provided for the contractor's staking operation, label the points by number and show coordinates and elevations. The exhibits cover this condition.

- If an L line is staked but later another line is selected for construction, make the staked line dashed and label it as "Line as staked" and make the other line solid and label it as "Line to be constructed."

On all sheets show the cut and fill slope limits, access control lines, easements, and right-of-way lines. Within the right-of-way, show all cultural features requiring relocation, such as utilities and fences. Identify all ownerships for right-of-way purposes. Show all drainage structures. Show any cultural features adjacent to the right-of-way that may be affected by the project.

Curve data consisting of delta angle, radius of curve, tangent length, length of curve, and superelevation should be shown. Curve widening may also be shown at this location. For spiral transitions, the spiral angle and length of spiral should be shown. Identify every 100 meter station along the centerline. Bearings or azimuths of all tangents should be shown.

Show the location of borings, test pits, or other sites where subsurface investigations have been made on the plan portion of the plan-profile sheet. Do not show actual log or test results on the plan-profile. Use separate plan sheets for this data.

On the profile portion of the plan-profile sheets show the profile grade and existing ground lines. Show gradients on the profile to four decimal places, grade elevations to three decimal places, and natural ground points to two decimal places.

Show vertical and horizontal clearances for railroads, highways, and streambeds under proposed and existing structures.

Identify and show type and clearance under and over utility lines within the right-of-way.

In addition to profile data, the quantity and limits of the following items may be shown by arrow diagram at the bottom of the profile sheet.

- Turf establishment.
- Clearing and grubbing.
- Embankment where it occurs.
- Roadway excavation where it occurs.
- Balance points if desired.

At the top of the profile portion of the sheet, the designer may show information such as curbs, fences, guardrail, etc., at the proper stations and identify them appropriately. These items may show instead on separate sheets using tables, tabulations, or other appropriate formats.

Show profiles of connecting roads, waterlines, road approaches, etc., on the profile sheet. Offset their location on the plan if they obscure the main profile or show them on a separate plan sheet.

Show bridges and major structures to be constructed on the plan and profile in outline only, with a note to see the appropriate drawings.

Show irrigation facilities requiring minimum service interruptions during construction of the project.

Show all culverts on the plan and profile sheets.

(2) Abbreviated Plans. (See Exhibit 9.37). Plan-profile sheets are not required for all work in a contract. Abbreviated plans are acceptable on rehabilitation type work, emergency relief work or other types of work where plan-profile sheets would not clarify the required construction.

The work areas can be identified along the route by stations, mile posts, kilometer posts, etc. with a written description of the work to be performed at each site.

The description is used to identify work details, specify quantities, and reference special details or standards elsewhere in the plans. The information may be placed in a tabular format or may be included as descriptive text at the specific work locations as shown on a straight line diagram or graph. Exhibit 9.36 is only one of several ways to show the work. Any plan format that is clear, concise and details the work is acceptable.

f. Bridges. Most bridges and other large structures are designed by the Bridge design units. Number the drawings properly for insertion in the final package. Structure sheets may be inserted into the plan package anywhere following the plan-profile sheets.

g. Drainage Facilities. Plan sheets under this subject area would include details of large culvert installations conforming to the requirements listed in Chapter 7. Headwalls, inlet and outlet treatments, fish passage requirements, energy dissipators, catch basins, manholes, and other drainage installation can also be detailed under this subject area. The drainage plan sheets should be numbered and placed in the plans in logical order as determined by the Designer. The plan sheets may be combined with the Drainage Summary to keep all similar work in one location in the plans.

h. Traffic Control Plan (TCP). The plan sheets for the traffic control plan are special drawings that graphically portray all traffic controls required to assure safe passage of traffic through a specific project construction zone. All pay items related to traffic control may be tabulated on this sheet or have a separate tabulation sheet.

Traffic control plans may range from simple line diagrams for low volume rural roads to complex plan sheets detailing every stage of the project work on high volume urban highways. Guidance on traffic control plans is provided on pages 316 to 318 in the 1994 edition of "A Policy on Geometric Design of Highways and Streets."

i. Standard Drawings, Standard Details, and Special Details. FLH standard drawings are usually incorporated into the contract plan assembly and not issued as a separate booklet. Special detail sheets, including Division Standard Details and project specific details, necessary to properly describe the work, may be placed under this subject area. Arrange the standard drawings, standard details, and project specific special details in an order that best clarifies the work to be accomplished.

(1) FLH Standard Drawings. FLH standard drawings cover various design elements that have been approved by FLHO for use on a nationwide basis. FLH standard drawings have a fixed format and each drawing has its own unique identification number. They cannot be changed by a Division Office and used as a standard drawing. If changes are made, they become special details. See Section 9.4.I.2.

(2) Division Standard Details. These drawings are used on a continuing basis within each division. They should be placed in the plans to clarify the work required.

Standard plans prepared by State DOT's or other outside agencies that are incorporated into the contract should be treated as Division Standard Details for insertion into the plans package.

(3) Special Details. Special details are plan sheets detailing grade crossings, turnouts, retaining walls, dikes and ponds, waste or borrow areas, stage construction plans, permanent striping and signing plans, road approaches, material source locations, and other work.

Many approaches are built using road approach plans adopted by each division. Their location is shown on the plan and profile sheets with a symbol and letter designation. Road approaches are roads that intersect the project on grade without excessive cuts or fills and without restrictive sight distances.

Some road approaches require special drawings to show how they fit into the project. These detail the alignment, profile, right-of-way and/or construction easements, typical section, and drainage for the road approach.

j. Environmental Mitigation. Commitments for environmental mitigation features which are contained in the environmental documentation should be detailed as necessary and included in the project plans as special details and/or shown at the appropriate location in the plans.

(1) Erosion Control Plan. The plan sheets for the erosion control plan are special drawings and/or standard detail drawings that detail the measures required to protect resources and to comply with permit stipulations. The plan sheet details should reflect Best Management Practices (BMP); comply with Erosion and Sediment Control on Highway Construction Projects, FHWA, 23 CFR Part 650, Subpart B.; and be in agreement with the stipulations in the National Pollutant Discharge Elimination System (NPDES) permit.

(2) Wetlands. Plan sheets for wetland replacement or mitigation are special drawings that detail all work required to ensure successful mitigation. These may range from simple sketches to elaborate contour grading and planting plans to conform to the commitments in the environmental document. Pay items may be tabulated on these sheets or on separate sheets.

(3) Other Plans. Additional plan sheets may be required to address issues such as material source rehabilitation, disposal or borrow area restoration, special landscaping plantings and other enhancing features. These plan sheets could be appropriately placed under this subject area.

k. Cross Sections. When cross sections are included in the contract plan assembly, show sufficient information on each of the sections to accurately determine the extent of the proposed work. Use a scale that is appropriate for the work.

l. Contiguous Projects. A general plan or layout of contiguous construction projects may be beneficial to potential bidders in determining the cost of work on FLH projects. This is particularly true where another agency is constructing a project that will affect FLH contractors. It is essential that the relationship between the projects be well detailed on the plans.

There are instances where as-built plans should be included in the contract plan package. If a bridge or other structure is scheduled for salvage, a set of the as-built plans will greatly assist a contractor in determining the most effective method to disassemble the structure.

On occasion, right-of-way plans or utility plans may be too complicated to incorporate on the plan and profile sheets. They could be inserted into the plans under this subject area.

B. Specifications. The designer is responsible for the initial preparation of all special contract requirements relating to an individual project. The special contract requirements shall conform to the format set forth in Subsection 9.4.K.

C. Estimate. The designer prepares the engineer's estimate for each project. The procedures and instructions outlined in Subsection 9.4.J cover the preparation of the estimate.

In addition to the estimated unit costs and total cost for construction, the estimate shall show, as separate line items, the estimated costs for construction engineering, utility relocation, and other anticipated contingencies.

D. PS&E Package. The following items represent the minimum requirements necessary to complete a basic PS&E assembly.

- Contract drawings.
- Special contract requirements.
- Engineer's estimate.
- Contract time.
- Physical data available to the bidders such as RDS listings, hydraulic analysis, geotechnical data and cross sections.

9.7 DIVISION PROCEDURES

Reserved for Federal Lands Highway Division office use in supplementing the policy and guidelines set forth in this chapter with appropriate Division procedures and direction.

LIST OF EXHIBITS

Exhibit

9.1	Sample Documentation of Highway Design Standards
9.2	Alignment Illustrations (Reserved)
9.3	Basic Types of Intersections (Reserved)
9.4	Minor Road Grade Adjustments at Intersections (Reserved)
9.5	Horizontal Realignment Examples of Intersections (Reserved)
9.6	Sight Distances at Grade Intersections with Stop Control (Reserved)
9.7	Triangular Island Details (Reserved)
9.8	Channelization Widening (Reserved)
9.9	Right Turn Configuration (Reserved)
9.10	Common Types of Retaining Structures (Reserved)
9.11	Sample Title Sheet for R/W Plans
9.12	Sample Plan Symbols and Abbreviations for R/W Plans
9.13	Sample Parcel Map for R/W Plans
9.14A	Sample R/W Plan Sheet
9.14B	Sample R/W Plan Sheet
9.14C	Sample R/W Plan Sheet
9.15	Sample Metes and Bounds Description (Reserved)
9.16	Sample Format for Listing Utility Companies (Reserved)
9.17	Sample Letter to a Utility Company (Reserved)
9.18	Sample Utility Agreement (Reserved)
9.19	(Reserved)
9.20	(Reserved)
9.21	Drafting Symbols, Culture, and Standards
9.22A	Sample Plan Title Sheet
9.22B	Sample Plan Title Sheet
9.23	Sample Plan Symbols and Abbreviations
9.24	Sample Summary of Quantities
9.25	Sample Typical Sections
9.26	Sample Tabulation of Drainage Quantities
9.27	Sample Tabulation of Quantities
9.28	Sample Tabulation of Quantities
9.29	Sample Tabulation of Quantities
9.30	Sample Tabulation of Quantities
9.31	Sample Tabulation of Quantities
9.32	Sample Tabulation of Quantities

LIST OF EXHIBITS

Exhibit

9.33	Sample Plan and Profile (Begin Project)
9.34	Sample Plan and Profile
9.35	Sample Plan and Profile
9.36A	Sample Plan and Profile (Suspend Project)
9.36B	Sample Plan and Profile (With Contours)
9.37	Sample Line Graph
9.38	Standard Drawings

Federal Highway Administration
Federal Lands Highway Divisions

Design Standards Information

Project Number: _____

Project Name: _____

Description/Termini: _____

_____

[ ] New Construction **[ ] Reconstruction** **[ ] RRR**

Highway System: _____

Owner Agency: _____

Functional Classification: _____

Traffic Data:

	ADT			Percent Trucks			
	Year	Average	Seasonal	DHV	DHV	ADT	D
Current							
Future							

Design Speed: _____ **Terrain: [ ] Level [ ] Rolling [ ] Mountainous**

Applicable Standards: _____

_____

Design Criteria:	**Standard**	**As Designed**	**Exception**
Horizontal Curvature			
Superelevation			
Superelevation Runoff			
Crown			
Gradient			
Travel Way Width			
Shoulder Width			
Vertical Curvature			
Stopping Sight Distance			
Bridge Width			
Bridge Railing			
Clear Zones			

Description of and reasons for exceptions to standards:_____

_____
_____
_____
_____
_____
_____

Analysis of risks and design considerations proposed to mitigate exceptions:

_____
_____
_____
_____

EXHIBIT 9.1
Sample Documentation of Highway Design Standards

Approval

+),
.)- **There are no exceptions to applicable standards.**

+),
.)- **The exceptions noted have been reviewed with client or cooperating agencies and are considered acceptable.**

Date	**Design Engineer**
Date	**Design Project Manager**

Approval is recommended

Date	**Project Development Engineer**

Approved for final PS&E

Date	**Division Engineer**

SYMBOL	EXAMPLE		LETTER SIZE LEROY TEMPLATE	MANUAL DRAFTING PEN SIZE	CADD STANDARDS		
					WT.	LC.	CELL
Centerline		Line		3	4	0	
		Ticks		1	2	0	
Staked centerline (when not same as proposed)		Line		1	1	0	
		Ticks		1	1	0	
Staked line				1	1	0	
Grade line-profile				3	4	0	
National Boundary				3	4	6	
State Boundary				1	3	6	
County line				1	3	4	
City limits				1	1	3	
National Forest Boundary or National Park Boundary	(hatches on Forest/Park side)			00	0	0	FOREST
Township or Range Line				2	3	0	RANGS
Section Line				1	2	0	SECLS
1/4 Line				0	1	0	QUARL
1/16 Line				00	0	0	LINE16
Meander Line				0	1	0	
Property Line	P/L		100V	00	0	0	

EXHIBIT 9.21
(Page 1 of 12)

SYMBOL	EXAMPLE	LETTER SIZE LEROY TEMPLATE	MANUAL DRAFTING PEN SIZE	CADD STANDARDS		
				WT-	LC-	CELL
Right-of-way	Existing R/W; Proposed/Final R/W	F E	140S 100V	1 00	2 0	0 7	
Partial Control of Access		F E		00 00	0 0	0 0	
Full Control of Access		F E		00 00	0 0	0 0	
Easement (Construction/temporary)	C/E		140S	1	2	0	
Easement (Permanent)	P/E		140S	1	2	0	
Right-of-way/Monument	R/W		140S	1	2	0	
Traverse Point (Horizontal and Verticle) Top of triangle points North	T-45 2,645.9		100V	1	2	0	TPOINT
Traverse Point (Horizontal)	T-3		100V	0	1	0	HPOINT
Verticle Control Wing Point	WP-10 L1 2,699.99		100V	00	0	0	WINGPT
Photo Center	P.C. 6-4		100V	00	0	0	PHOTO
Analytical Point	12 34 9,999.99		100V	0	1	0	
Brass Cap	▲			0	1	0	BCAP
Steel Pin				1	2	0	STPIN
Hub and Tack	○			0	1	0	HUB
Spot Elevation	X 99.99		100V	00	0	0	SPELV

EXHIBIT 9.21
(Page 2 of 12)

SYMBOL	EXAMPLE	LETTER SIZE LEROY TEMPLATE	MANUAL DRAFTING PEN SIZE	CADD STANDARDS WT-	LC-	CELL
Bench Mark PBM or TBM	X PBM 399.44	100V	0	1	0	BMMARK
Section Corner (Found)			0	1	0	SECF
Section Corner (Not Found)			00	0	0	SECNF
1/4 Corner (Found)	EW NS		0 0	1 1	0 0	QCOREW QCORNS
1/4 Corner (Not Found)			00	0	0	QCORNF
1/16 Corner (Found)			00	0	0	COR16F
1/16 Corner (Not Found)			0	1	0	COR16NF
Property Corner (Found)			00	0	0	CORPR
Parcel Number	400	100V	00	0	0	PARNUM
Coordinate Grid Tick			0	1	0	TICK
Coordinate Grid Line			00	0	0	
Structures:						
	Existing / Proposed					
Building	Label if foundation only	P E	0 00	1 0	0 3	
Overpass		P (Center) (Edge) E (Center) (Edge)	0 00 0 00	1 0 1 0	0 0 3 3	

SYMBOL	EXAMPLE		LETTER SIZE LEROY TEMPLATE	MANUAL DRAFTING PEN SIZE	CADD STANDARDS		
					WT-	LC-	CELL
	Existing	Proposed					
Underpass		P (Center)		0	1	0	
		(Edge)		00	0	0	
		E (Center)		0	1	3	
		(Edge)		00	0	3	
Tunnel		P (Center)		0	1	0	
		(Edge)		00	0	0	
		E (Center)		0	1	3	
		(Edge)		00	0	3	
Stockpass		P (Center)		0	1	0	
		(Edge)		00	0	0	
		E (Center)		0	1	3	
		(Edge)		00	0	3	
Cattleguard*		P		00	0	0	CTGDP
		E		00	0	3	CTGDE
Median and Side Barrier		P		0	1	0	
		E		00	0	3	
Retaining Wall		P		1	2	0	RETWAL
		E		00	0	2	RETWAL
Guardrail		P		0	1	0	GRDRL
		E		00	0	3	GRDRL
Curb		P		0	1	0	
		E		00	0	3	
Curb and Gutter		P		0	1	0	
		E		00	0	3	
Fence		P		0	1	0	FENCP
		E		00	0	0	FENCE
Gate with Fence		P		0	1	0	GATE.P
		E		00	0	0	GATE.E
Topographic Features							
Index Contour	300		100V	1	2	0	
Intermediate Contour				00	0	0	

EXHIBIT 9.21
(Page 4 of 12)

SYMBOL	EXAMPLE		LETTER SIZE LEROY TEMPLATE	MANUAL DRAFTING PEN SIZE	CADD STANDARDS WT.	CADD STANDARDS LC.	CADD STANDARDS CELL
Interpolated or Unreliable Contour				00	0	0	
Depression				00	0	0	
Top with Spot Elevation	25.8		100V	00	0	0	
Saddle	25.8		100V	00	0	0	
Depression with Spot Elevation	25.8		100V	00	0	0	
Drainage Facilities:							
	Existing	Proposed					
				1	2	0	
Bridge				00	0	3	
Box Culvert			P	0	1	0	
			E	00	0	3	
Pipe Culvert			P	3	3	0	
			E	00	0	3	
Pipe Culvert with Headwall			P	3	3	0	HEADWL
			E	00	0	3	HEADWL
Pipe Culvert with End Section			P	3	3	0	ENDSCP
			E	00	0	3	ENDSCE
Pipe Culvert with Inlet			P	3	3	0	INLETP
			E	00	0	3	INLETE
Box Culvert in Profile			P	1	2	0	
			E	00	0	3	
Pipe Culvert in Profile			P	1	2	0	
			E	00	0	3	

SYMBOL	EXAMPLE		LETTER SIZE LEROY TEMPLATE	MANUAL DRAFTING PEN SIZE	CADD STANDARDS WT*	CADD STANDARDS LC*	CADD STANDARDS CELL
	Existing	Proposed					
Underdrain (Show Stations)	UD	UD	P E	140S 100V	0 00	1 0	0 3	
Dike			P E	1 00	2 0	0 3	
Siphon			P E	0 00	1 0	0 3	
Spillway Inlet			P E	0 00	1 0	0 3	
Riprap or Slope Protection				0	1	0	
Traffic Control Devices:							
Traffic Signal			P E	00 00	0 0	0 0	SIG.P SIG.E
Vehicle Detector			P E	00 00	0 0	0 0	
Flashing Beacon			P E	00 00	0 0	0 0	
Commercial Sign			P E	00 00	0 0	0 0	SIGN2P SIGN2E
Traffic Sign, Post Mounted			P E	0	1	0	SIGNIP SIGNIE
Traffic Sign, Portable				0	1	0	SIGN.P
Traffic Flow Arrow (Indicates Traffic Direction)				0	1	0	AROWTC
Flagger				0	1	0	FLAGGR
Barricades	Type 1	Type 2 Type 3		0	1	0	BARCDI BARCD2 BARCD3
Drum				0	1	0	DRUM

EXHIBIT 9.21
(Page 6 of 12)

SYMBOL	EXAMPLE			LETTER SIZE LEROY TEMPLATE	MANUAL DRAFTING PEN SIZE	CADD STANDARDS		
						WT-	LC-	CELL
Traffic Cones	Type A	Type B	Type C		0	1	0	CONEA CONEC
Flashing Arrow Board					0	1	0	FLASH
	Existing	Proposed						
Crash Cushion			P E		0 0	1 1	0 0	CRASHP CRASHE
Mile Post (Highway)			P E		0 00	1 0	0 3	MPST.P MPST.E
Utilities:								
Power Pole with Utility line	— —o— P —	— P —•—	P E	140S 100V	0 00	1 0	0 3	UP.POL UE.POL
Telephone Pole with Utility line	— —o— T —	— T —•—	P E	140S 100V	0 00	1 0	0 3	UP.POL UE.POL
Joint use Pole with Utility line	— —o—P&T—	—P&T—•—	P E	140S 100V	0 00	1 0	0 3	UP.POL UE.POL
Cable TV with pole and utility line	— —o-CATV—	—CATV—•—	P E	140S 100V	0 00	1 0	0 3	UP.POL UE.POL
Anchor (Support) Pole	—o	—•	P E		00 00	0 0	0 0	UP.SUP UE.SUP
Pole Anchor	—)				00	0	0	UE.ANC
Transmission Tower			P E		00 00	0 0	0 0	UP.TOW UE.TOW
Gas/Water Meter	G	G	P E	140S 100V	00 00	0 0	0 0	UP.MET UE.MET
Gas/Water Valve (Riser)	W	W	P E	140S 100V	00 00	0 0	0 0	UP.RIS UE.RIS
Gas/Water Pressure Regulator	G	G	P E	140S 100V	00 00	0 0	0 0	UP.REG UE.REG

SYMBOL	EXAMPLE			LETTER SIZE LEROY TEMPLATE	MANUAL DRAFTING PEN SIZE	CADD STANDARDS		
	Existing	Proposed				WT*	LC*	CELL
Manhole			P		00	0	0	UP.MAN
			E		00	0	0	UE.MAN
Fire Hydrant			P		00	0	0	UP.FIR
			E		00	0	0	UE.FIR
Telephone Booth	TB	TB	P	140S	00	0	0	UP.BOX
			E	100V	00	0	0	UE.BOX
Telephone Pedestal	TP	TP	P	140S	00	0	0	UP.BOX
			E	100V	00	0	0	UE.BOX
Street Light			P		00	0	0	LTE1P
			E		00	0	0	LTE1E
			P		00	0	0	LTE2P
			E		00	0	0	LTE2E
Well	Well	Well	P	140S	00	0	0	
			E	100V	00	0	0	
Septic Tank	ST	ST	P	140S	00	0	0	UP.BOX
			E	100V	00	0	0	UE.BOX
Storage Tank (Label above or below Ground)			P	140S	00	0	0	
			E	100V	00	0	0	
Gasoline Pump	GP	GP	P	140S	00	0	0	UP.BOX
			E	100V	00	0	0	UE.BOX
Underground Utilities	W	W	P	140S	0	1	0	UTLIN
			E	100V	00	0	3	UTLIN
Underground Utilities (Existing) W (Water), P (Power), SS (Storm sewer), O (Oil), SA (Sanitary sewer), T (Telephone), G (Gas), CATV (Cable TV). Size of the utility may be shown along with the utility code (ie. 6"W)								
Boring Location					00	0	0	BORE

EXHIBIT 9.21
(Page 8 of 12)

SYMBOL	EXAMPLE	LETTER SIZE LEROY TEMPLATE	MANUAL DRAFTING PEN SIZE	CADD STANDARDS		
				WT*	LC*	CELL
Railroad Features:						
Single Track			00	0	0	RR.1
Multiple Track			00	0	0	RR.2
Mile Post			00	0	0	
Advance Warning			00	0	0	
Cross Buck			00	0	0	
Flashing Light			00	0	0	
Cantilever			00	0	0	
Short Arm Signal			00	0	0	
Yard Limit			00	0	0	
Semaphore Signal			00	0	0	
Beacon Tower			00	0	0	
Switch Point			00	0	0	

SYMBOL	EXAMPLE	LETTER SIZE LEROY TEMPLATE	MANUAL DRAFTING PEN SIZE	CADD STANDARDS		
				WT*	LC*	CELL
Land Features:						
Conifer Tree			00	0	0	PINE
Deciduous Tree Proposed planting may use other symbols to distinguish tree types			00	0	0	SGLTE
Treeline			00	0	0	TREELN
Hedge (Label Proposed or Existing)			00	0	0	
Brushline			00	0	0	BRUSH
Orchard			00	0	0	
Cultivation Boundary			00	0	0	
Rock Outcrop	Rock Outcrop	140S	00	0	3	
Stump			00	0	0	STUMP
Spring			00	0	0	SPRING
Intermittent Drainage and Small Creeks			00	0	0	STREAM
Creek, Large			00	0	0	STREAM

SYMBOL	EXAMPLE	LETTER SIZE LEROY TEMPLATE	MANUAL DRAFTING PEN SIZE	CADD STANDARDS		
				WT.	LC.	CELL
River			0	1	0	STREAM
Lake			0	1	0	STREAM
Reservoir with Dam			0	1	0	STREAM
Tidal Shoreline			0	1	0	STREAM
Marsh Land			00	0	0	MARSH
Irrigation Ditch (Proposed)	irrig. ditch →	140S	0	1	0	
Irrigation Ditch (Existing)	Irrig. ditch →	100V	00	0	3	
Channel Change			0	1	3	STREAM
Miscellaneous:						
Bar Scale	100 0 100 SCALE IN FEET		0	1	0	SCL100
Breakline			0	1	0	
Sectional designation	A A	175S	3	3	0	
North Arrow (Alternate designs are acceptable for manual drafting)	N		0	1	0	NORTH

EXHIBIT 9.21
(Page 11 of 12)

SYMBOL	EXAMPLE	LETTER SIZE LEROY TEMPLATE	MANUAL DRAFTING PEN SIZE	CADD STANDARDS		
				WT*	LC*	CELL
Cemetery			00	0	0	CEMTRY
Materials Source			00	0	0	SOURCE
Church			00	0	0	CHURCH
School			00	0	0	SCHOOL
Road System (Title Sheet)			0	1	0	
Roadway (Existing) (Label Paved or Unpaved)	PAVED		00	0	3	
Trail			00	0	3	
Construction Limits						
Top of Cut			2	3	1	
Toe of Fill			2	2	3	

EXHIBIT 9.21
(Page 12 of 12)

EXHIBIT 9.38
APPROVED STANDARD DRAWINGS

September 8, 1997

DRW'G NO.	APPR - REV DATE	DRAWING DESCRIPTION/TITLE
M157-1	03/96 - 06/97	Silt Fence
M157-2	03/96	Temporary Inlet Protection
M157-3	03/96	Straw Bales
M157-5	03/96 - 06/97	Temporary Diversion Channels
M157-6	03/96	Check Dam
M157-7	03/96	Temporary Erosion Control Berms, Slope Drains and Lined Waterways
M204-1	03/96	Earth Berm For Roadside Barrier Terminal Sections
M204-2	03/96	Earth Berm For Median Barrier Terminal Sections
M501-1	03/96 - 05/97	Portland Cement Concrete Pavement
M501-2	03/96 - 06/97	Portland Cement Concrete Pavement Joints
M501-3	03/96 - 05/97	Concrete Paving Patching
M501-4	03/96	Concrete Pavement Removal Methods
M601-1	03/96 - 05/97	Concrete Headwalls
M601-2	03/96 - 05/97	Slope Paving for Concrete Headwalls
M601-3	03/96 - 05/97	Wingwalls for Concrete Headwalls
M601-4	03/96 - 05/97	Concrete Headwall for 450 to 900 mm Pipe Culvert
M601-5	03/96 - 05/97	Concrete Headwalls for 1050 to 2100 mm Pipe Culvert
M601-6	03/96 - 05/97	Concrete Wingwalls for Single Skew 1050 to 2100 mm Culverts
M601-7	03/96 - 05/97	Concrete Wingwalls for Multiple Normal 1050 to 2100 mm Culverts
M601-8	03/96 - 05/97	Concrete Wingwalls for Multiple Skew 1050 to 2100 mm Culverts
M602-1	03/96	Metal Pipe Culvert
M602-2	03/96	Metal Pipe Culvert Coupling Band
M602-3	03/96	Metal and Plastic Pipe Culvert Bedding

EXHIBIT 9.38
APPROVED STANDARD DRAWINGS

September 8, 1997

DRW'G NO.	APPR - REV DATE	DRAWING DESCRIPTION/TITLE
M602-4	03/96	Metal End Section
M602-5	03/96	Plastic Pipe Culvert
M602-6	03/96	Pipe Culvert Inlet Treatment in Cut Slopes
M602-7	03/96	Concrete Pipe Culvert Installation
M602-8	03/96	Concrete End Section for Round Pipe
M602-9	03/96 - 05/97	Metal End Sections with Safety Bars
M603-1	03/96	Structural Plate Pipe Culvert
M603-2	03/96	Structural Plate Pipe Arch Culvert
M604-1	03/96 - 05/97	Catch Basin Type 1
M604-2	03/96	Metal Frame and Grate Type A
M604-3	03/96	Metal Frame and Grate Type B
M604-4	03/96 - 05/97	Catch Basin Type 2 with Down Drain
M604-5	03/96 - 05/97	Inlet, Type 5A
M604-6	03/96	Frame and Grate Type 5A
M604-7	03/96 - 05/97	Inlet, Type 6B
M604-8	03/96 - 05/97	Inlet, Type 7A and 7B for use with 300 to 900 mm Pipes
M604-9	03/96 - 05/97	Manhole
M606-1	03/96	Slotted Drain Spillway Assembly
M617-10	03/96	G4 W Beam Guardrail Wood Posts
M617-11	03/96	G4 W Beam Guardrail Modified Eccentric Loader Terminal Terminal Section, Type MELT
M617-12	03/96	G4 W Beam Guardrail Modified Eccentric Loader Terminal MELT Anchorage Assembly
M617-13	03/96	G4 W Beam Guardrail BCT and MELT Anchorage Assembly Details

EXHIBIT 9.38
APPROVED STANDARD DRAWINGS

September 8, 1997

DRW'G NO.	APPR - REV DATE	DRAWING DESCRIPTION/TITLE
M617-14	03/96	G4 W Beam Guardrail Breakaway Cable Terminal Wood Posts Terminal Section, Type BCT
M617-15	03/96	G4 W Beam Guardrail Steel Tube Anchor BCT Anchorage Assembly Wood Posts
M617-16	03/96	G4 W Beam Guardrail Concrete Anchor BCT Anchorage Assembly Wood Posts
M617-17	03/96	G4 W Beam Guardrail Back Slope Anchor Terminal Wood or Steel Posts Terminal Section, Type G4-BAT
M617-18	03/96	G4 W Beam Guardrail Steel Posts
M617-21	03/96	CRT W Beam Guardrail Cable Releasing Terminal CRT Posts Terminal Section, Type CRT
M617-22	03/96	CRT W Beam Guardrail Steel Tube Anchor CRT Anchorage Assembly CRT Posts
M617-23	03/96	G4 W Beam Guardrail Supplementary Installation Details
M617-24	03/96	G4 W Beam Guardrail Placement at Minor Structures and Pipe Culverts
M617-25	03/96	G4 W Beam Guardrail Connection to Structure Vertical Face Wood Posts
M617-26	03/96	G4 W Beam Guardrail Connection to Structure Vertical Face Steel Posts
M617-27	03/96	G4 W Beam Guardrail Connection to Structure Safety Shape Face Wood Posts
M617-28	03/96	G4 W Beam Guardrail Connection to Structure Safety Shape Face Steel Posts
M617-29	03/96	G4 W Beam Guardrail Connection to Structure Safety Shape Face Rubrail
M617-30	03/96	G4 W Beam Guardrail Connection to Structure Vertical Flared Back Wood Posts
M617-31	03/96	G4 W Beam Guardrail Connection to Structure Vertical Flared Back Steel Posts
M617-32	03/96 - 05/97	G4 W Beam Guardrail Flared Back Parapet Wall and Safety Shape Transition

EXHIBIT 9.38
APPROVED STANDARD DRAWINGS

September 8, 1997

DRW'G NO.	APPR - REV DATE	DRAWING DESCRIPTION/TITLE
M617-60	03/96 - 05/97	Steel-backed Timber Guardrail, Type A & Type B
M617-61	03/96	Steel-backed Timber Guardrail Terminal Section, Type FAT 9 And Type FAT 6
M617-62	03/96	Steel-backed Timber Guardrail Terminal Section, Type SBT-BAT
M617-63	03/96	Steel-backed Timber Guardrail Around Circular Curves 22 m Radius and Below
M617-64	03/96	Steel-backed Timber Guardrail Around Circular Curves 22 m Radius and Below
M617-65	03/96	Steel-backed Timber Guardrail Bridge Connection
M617-66	03/96	Steel-backed Timber Guardrail Bridge Connection
M617-80	03/96	Steel-backed Log Rail
M617-81	03/96	Steel-backed Log Rail Blockout
M618-1	03/96 - 05/97	Concrete Barrier
M618-2	03/96 - 06/97	Precast Concrete Guardwall, Type 1
M618-3	03/96 - 05/97	Precast Concrete Guardwall, Type 1 Terminal Sections, Types A and B
M619-1	03/96 - 06/97	Cattle Guard
M619-2	03/96 - 05/97	Cattle Guard
M619-3	03/96	Cattle Guard Precast Foundation
M620-1	03/96 - 05/97	Stone Masonry Guardwall
M620-2	03/96 - 06/97	Stone Masonry Guardwall Terminal Sections, Type SAT and Type BT
M620-3	03/96	Stone Masonry Guardwall Terminal Section, Type BAT