IEEE TRANSACTIONS ON

VEHICULAR TECHNOLOGY

VOLUME VT-19, NUMBER 1

NOTE TO READER:

THIS IS A LARGE DOCUMENT

Due to its large size, this document has been segmented into multiple files. All files separate from this main document file are accessible from links (blue type) in the table of contents or the body of the document.

IEEE TRANSACTIONS ON

VEHICULAR TECHNOLOGY

FEBRUARY 1970 VOLUME VT-19 NUMBER 1

Published Quarterly

SPECIAL ISSUE ON HIGHWAY ELECTRONIC SYSTEMS

PREFACE. *L. Saxton* 2
HIGHWAY ELECTRONIC SYSTEMS *J. A. Volpe and F. C. Turner* 4

PAPERS

Aspects of the History of Traffic Signals. *E. A. Mueller* 6
The Highway Research Board-Electronics and Information.. *W. N. Carey, Jr.* 17
Electromagnetic Loop Vehicle Detectors. *R. L. Anderson* 23
Radar, Acoustic, and Magnetic Vehicle Detectors *.J. L. Barker* 30
Future Vehicle Detection Concepts *M. K. Mills* 43
A Backbone Highway Communications System Using Coaxial Cable *C. N. Lynk and J. F. Byrne* 50
Highway Communication Using Wide-Band Cable and Inductive Transmission Methods., *W. S. Halstead and R. A. Mazzola* 59
A Total Highway Communications System Using F1-F1 Repeaters *F. B. Woodworth* 69
Characteristics of Motorist Aid Communications System *T. K. Cranston and J. H. Kell* 74
FLASH : A Disabled Vehicle Detection System *C. J. Meiselback 1. S. Wisepart, H. R. Inhelder and R. H. Emery* 82
Surveillance Aspects of a Computer-Controlled Traffic System.. *R. L. Gordon. K. W. Dodge, and J. E. Scott* 90
The Application of a Digital Computer for Traffic Control. *0. I. Bermant* 98
A Merging Control System for the Urban Freeway.. *D. Bushnell* 107
Vehicular Tunnel Traffic-Flow Control. *R. F. Cunningham and C. F. White* 120
Automatic Vehicle Identification Systems-Methods of Approach. *A. S. Palatnick and H. R. Inhelder* 128
Vehicular Location and Information Systems *W. V. Braun and D. L. Walker* 136
An Electronic Route-Guidance System for Highway Vehicles *D. A. Rosen, F. J. Mammano, and R. Facout* 143
Automatic Vehicle Guidance and Control-A State of the Art Survey. *R. E. Fenton* 153
Highway Electronic Systems-Today and Tomorrow. *A. Goldsmith and G. W. Cleven* 161

CONTRIBUTORS.. 168

DOT/FHWA

IEEE VEHICULAR TECHNOLOGY GROUP

The Vehicular Technology Group is an organization, within the framework of the IEEE, of members with principal professional interest in vehicular communications. All members of the IEEE are eligible for membership in the Group and will receive this TRANSACTIONS upon payment of the annual Group membership fee of $5.00. For information on joining, write to the IEEE at the address below.

ADMINISTRATIVE COMMITTEE

R. E. BLOOR, *Chairman*
M. COOPER, *Vice Chairman*
S. LANE, *Secretary*
N. ALIMPICH *Treasurer*

N.C.COLBY
R.J. EVANS
J. GERMAIN
G. J. IKELMAN
J. E. KELLER
R. A. MAZZOLA
R. H. MOORE
J R. NEUBAUER
J. J. RENNER
N. H. SHEPHERD
D. TALLEY
G. E. WOODSIDE, JR.

IEEE TRANSACTIONS@ ON VEHICULAR TECHNOLOGY

Editor

CARL N. BROOKS
Hallicrafters 3200
600 Hicks Road
Rolling Meadows, III. 60008

Papers Procurement Committee

Review Chairman

D. TALLEY

THE INSTITUTE OF ELECTRICAL AND ELECTRONICS ENGINEERS, INC.

officers

J. V. N. GRANGER, *President*
J. M. MULLIGAN, JR., *Vice President*
HAROLD CHESTNUT, *Vice President, Technical Activities*
M. E. VAN VALKENBURG, *Vice President. Publication Activities*
R. H. TANNER, *Secretary*
R. W. SEARS, *Treasurer*

Headquarters Staff

DONALD G. FINK, *General Manager*

JOHN L. CALLAHAN, *Staff Consultant*
RICHARD M. EMBERSON, *Director, Technical* Sercices
RALPH H. FLYNN, *Director, Publishing Services*
ELWOOD K. GANNETT, Director, *Editorial* Services
WILLIAM J. KEYES, *Director, Administrative Sercices*
JOHN M. KINN, *Director, Educational* Sercices
LEON PODOLSKY, *Staff Consultant*
BETTY J. STILLMAN, *Administrative Assistant to the General Manager*
HOWARD E. TOMPKINS, *Director, Information Sercices*

Editorial Department

H. JAMES CARTER, *Managing Editor, Transactions*
Senior Editors: ANDREE ABRAMOFF, GAIL S. FERENC, JOAN W. STERN, INGEBORG M. STOCHMAL
Associate Editors: ROSE ARNY, GAIL R. BLUMBERG, HELEN S. GOLDMAN, PATRICIA O'BRIEN

IEEE TRANSACTIONS ON VEHICULAR TECHNOLOGY is published quarterly by The Institute of Electrical and Electronics Engineers, Inc., 345 East 47 Street, New York, N.Y. 10017, and at 20th and Northampton Sts., Easton, Pa. 18042. Responsibility for the contents rests upon the authors and not upon the IEEE, the Group, or its members. This journal is available in either microfiche or printed form. Individual copies may be purchased at $5.00 (first copy only) by IEEE members and $10.00 per copy by nonmembers. Annual subscription price: IEEE members, dues plus Group fee. Price for nonmembers available on request. Abstracting is permitted with mention of source.

All rights, including translation, are reserved by the IEEE. Requests for republication permission should be addressed to the IEEE Editorial Department, 345 East 47 Street, New York, N. Y. 10017. Copyright O 1970 by The Institute of Electrical and Electronics Engineers, Inc. Printed in U.S.A at Mack Printing Company, 20th and Northampton Sts., Easton, Pa. 18042.

Preface

THE transportation complex of the United States is an essential cornerstone of our way of life. This sprawling multimodal complex provides us with the mobility of people and goods which is essential for a modern industrialized society. Our nation's highway network is the major element in this total complex and accounts for over 90 percent of our intercity passenger movements and 20 percent of the ton-miles of goods movements.[1]

While the need may exist for a more balanced system of total transportation. especially in our congested urban areas, the fact remains that the highway system is, and will continue to be in the foreseeable future, the prime means of transportation of people in the United States. Contributing reasons for this fact are the relatively free choice of route and time of departure, the door-to-door convenience without switching transportation modes. and the relatively minimal direct cost per trip. It is obvious, however, that the safety and efficiency of the present highway system can and must be improved. Probably no one appreciates the overall problems and shortcomings more than the highway planners, engineers, and administrators who are directly involved with the highway system. Much has been accomplished; the interstate system which is run- over 65 percent complete has brought a major decrease in highway travel time between major cities while at the same time achieving a 45-percent reduction in fatalities in 1968 from 5.5 fatalities per 100 million vehicle miles on all classes of roadway to 3.0 fatalities per 100 million vehicle miles on the interstate systems. Similarly, standardized signing, improved traffic flow strategy in urban networks, improved vehicle detection and signalization, and the upgrading of the safety characteristics of existing road systems are other continuing improvements. But the fact still remains that we must continue to seek improved utilization of the existing highway system. This is especially evident when one considers that the size of the present network, consisting of 3.7 million miles of roadway, has remained essentially unchanged since World War II and will not be significantly increased in future years. Y et it is projected that the use of the highway system will increase from today's over one trillion vehicle miles to 1.5 trillion vehicle miles by 1985, an increase of 43 percent in 15 years. Compounding this potentially increasing congestion is the fact that a large percentage of the increase will be in urban areas which are already the most congested and where socioeconomic factors make it most difficult to construct additional roads. For example, about 70 percent of today's population lives in urban areas, and by 1985 this figure is expected to increase to altnost 50 percent.

To restate the ever-pressing requirements. new and better techniques of improving the efficiency and safety of the existing system must be developed. A prime element in this improvement will be the use of electronics as developed and applied to traffic advisory, command, control, surveillance, and communications system-. To highlight, this rapidly expanding area of technology this special issue on highway electronic systems has been prepared. The papers have been written for a wide audience-ranging from the electronics design engineer, who may be unfamiliar with this subject area but is quite familiar with the general electronics field, to the practicing highway engineer, nho is well aware of the overall problems or needs but is less familiar with the state of the art of electronics technology.

[1] W. W. Seifert, "Transportation development-1 national challenge," presented to the Committee on Science and Astronautics, U. S. House of Representatives, Ninety-First Congress, First Session, February 5, 1969.

This special issue is not intended to be a thorough and exhaustive treatment of all areas of highway electronic systems; rather. it provides an overview of the state of the art. Introductory comments by Secretary of Transportation J. A. Volpe and Federal Highway Administrator F. C. Turner are followed by special-interest lead-off articles on the history of traffic control devices and the role of the Highway Research Board. Subsequent articles are presented in the subject areas of vehicle detection, communications, specific traffic systems, motorist aid systems, and possible future systems and techniques now under development. Finally, an article on the possible role of electronics provides a summary while pointing to the areas of future developments. No attempt has been made to seek a common philosophy or viewpoint among the individual authors; hence, differences of opinion or approach may exist in certain subjects and systems. This is indicative. however, of the lack of firm well-established specifications, Also, the majority of articles are aimed at providing a broad perspective, and many have been written from the standpoint of quasi-technical surveys of a subject area rather than fundamental research findings or highly technical expositions.

In conclusion, I believe you will find this special issue unique in providing an overview of the state of the art of highway electronic systems. I trust it will spark your interest and perhaps, as a result, bring about your own personal involvement in this challenging field.

Finally, this issue would not be complete without acknowledging and thanking those who made it possible. Certainly, many thanks go to the authors of the papers you are about to read and to the reviewers for their diligent' and sometimes thankless task, to the Editorial Review Board for this special issue, and last but not least, to my secretary for the many clerical details involved in such an undertaking.

----LYLE SAXTON *Guest Editor*

Lyle Saxton (S' 55-M' 62) was born in Vici, Okla., on March 16, 1936. He received the B.S.E.E. degree from the University of Oklahoma, Norman, in 1959.

He joined the Astro Electronics Division, Radio Corporation of America, where he was engaged in image sensor design and development for spacecraft. In 1966 he joined the Goddard Space Flight Center, National Aeronautics and Space Administration, and was engaged in the advanced mission system design of the Earth Resources Technology Satellite. In 1968 he joined the Office of Research and Development, Traffic Systems Division, Bureau of Public Roads, Federal Highway Administration, Washington, D. C., and is Leader of the Systems Technology and Integration Group.

Mr. Saxton is a memher of Tau Beta Pi, Eta Kappa Nu, the Highway Research Board, Committee on Communications and Secretary of the Subcommittee on Communications, American Association of State Highway Officials.

Highway Electronic Systems

THE mission and role of the Department of Transportation is to develop and coordinate an effective national transportation system which will serve the needs and the interests of all parts of the country as well as all srgments of the economy.

In carrying out this mission, the Department has established broad goals and objectives in the following general areas :

Safety: to minimize the loss of human life, property, and human suffering through injury from transportation-related accidets.

Economic efficiency of transportation to provide a mix of transportation alternatives which will produce maximum benefits in safety, service, convenience, comfort, capacity, and speed for a given cost.

Optimal use of environmental resources: to increase the benefits derived from preserving and enhancing the environmental, aesthetic, and social functions of transportation.

Support of other national interests: to promote effectively all objectives of the Federal Government whenever they are affected by transportation.

These goals and objectives are intended to be a general policy around which the operating activities of the Department plan their programs and direct their research and development. In particular, they relate to the complex problems involved in operating thr nation's highway system within the framework of today's environment. All of this calls for a major portion of our effort to be directed to the circumstances that annually take the lives of more than 55 000 of our citizens, while simultaneously seeking ways in which to optimize the efficiency of our highway system through the use of applied technology. These measures must include new concepts and developments in the field of electronics.

In establishing the Department of Transportation, Congress directed it not only to encourage the cooperation of government agencies, carriers, and other interested parties, but to stimulate technological advances in transportation. This special issue, in itself, is exemplary of such cooperation. It highlights the state of the art in highway electronics, and it indicates the promise that is inherent in this technology for making significant contributions toward realizing safe and efficient operation of the country's complex highway system.

— JOHN A. VOLPE, *Secretary of Transportation*

THIS special issue deals not only with integrated electronic systems but with the technology that is required to achieve successful operation. To place some of the 1969 dimensions of the highway system in the United States in proper focus, we note the following figures:

3.7 million miles of roads and streets
almost 10.5 million registered motor vehicles
1 trillion 60 billion vehicle miles of travel in a year
56 000 highway fatalities in a year
14 million vehicle crashes in a year.

Present trends indicate that by 1985, there will be 144 million motor vehicles driven 1.3 trillion miles each year by some 265 million Americans. This vast number of cars will be traveling that staggering total of mileage over essentially the same number of miles of road that exist today. If traffic fatalities were to continue at no increase over present rates, we could project more than 82 000 deaths on the highways in 1985.

With this situation as a frame of reference, how can electronics technology be utilized to operate the highway system more effectively and thereby reverse the trend in this projection of increased congestion and accident-related deaths and injuries?

Although electronics technology is a relatively untapped resource, electronic systems are already employed in such functional areas as highway surveillance, roadside communications. traffic control, and emergency services. Experiments are underway in merging, passing, route-guidance systems, and vehicle locator systems. In addition to research directed at the federal level, our state grant-in-aid programs under the Highway Safety Art have generated significant activity at the local level in communications, data processing, and traffic-control systems.

Electronics represents highly challenging areas of interest in which the federal, state, and professional communities can contribute as partners. There is much work to be done in all of these areas, including the exploration of new concepts which are yet to be perceived.

The tremendous achievements of the Apollo Space Program have demonstrated the performance capability and the high reliability that can be attained with electronics. If this technology is applied to the highway environment, a tremendous payoff in improved traffic efficiency and safety is assured. Let us not wait for another decade before doing something about the development' of applied highway electronic-control systems. The time to determine our future is now.

— F. C. **TURNER,** *Federal Highway Administrator*

Aspects of the History of Traffic Signals

EDWARD A. MUELLER

Abstract-The history of traffic signals is traced from the signal fires which guided early man to the sophisticated electromechanical signal devices of today. Early experiments with officer-operated semaphores, lanterns, and electric lights are discussed. The influence of railroad signaling is noted, as are the innovative efforts of inventors who saw the problems of congestion and hazard developing to the point where control measures were essential. Descriptions of several devices show the imagination of early practitioners, and one may reflect with some humor on what might have been developed for use today. Some of the earliest attempts at automatic control even made use of the policeman's whistle, blown by a small compressor, while later efforts included clanging bells as a substitute. The extent to which some of these quite primitive devices survived in actual use into the post-World War II era is remarkable; devices unique to an area often hung on, long beyond the time when they were made obsolete by newer devices. Credit is given to several pioneers in the field, along with appropriate references to the few who have contributed to preservation of parts of the history of this interesting subject.

THE USE OF traffic-control devices certainly began before the dawn of recorded history and we know, as a matter of written fact, that the ancient Roman road builders used milestones (a form of traffic-control device) on their roads to provide directions for travelers. The cliche that "all roads lead to Rome" was indeed true and roads were even marked accordingly. The Forum in Rome had a milestone, made in gold, which served as the origination point for the calculation of all mileages. We also know that. in Roman days, one-way street movement was resorted to. and, in ancient Pompeii. chariot parking was restricted to tavern yards.

Bridging the years rapidly. it is known that, during colonial days in the United States, a similar type of marking distances on post roads was employed. When Benjamin Franklin was an official in the postal service, he used a form of cyclometer mounted in a horse-drawn chaise, as a measure of mileage to insure that milestones were installed at correct distances from each other. When the first turnpikes or toll roads were built in these early days, directional signs for the travelers were required as a condition of building and running those roads [1].

Insofar as traffic signals per se are concerned, the first signal lighting could be ascribed to use of camp fires and of flaming brands by prehistoric man to guide returning fishermen to their tribes. There are historical references to regularly maintained signal lights on towers that go back 2600 years. The most, famous of these early structures, and probably the tallest tower ever to house a signal light. was the Pharos of Alexandria, Egypt. Built about 230 B. C., this structure towered some 400 feet into the air. It outlasted two civilizations and survived the Roman Empire by nine centuries. This marine lighthouse was truly a wonder of the world in its day.

With regard to land transportation, one must look at railroads, where signal lighting was first well established. As early as 1857, lanterns which were hung from a crossbar gave railroad men a block signal visible by night as well as by day. By 190.5 the block signals were mostly semaphores with colored discs transmitting the light of oil lamps at night [2]. Insofar as control or direction of street traffic by colored lights is concerned Great Britain probably first saw what we now think of as traffic signals.

A native of Bradford, England, who was a mill laborer, well over a hundred years ago seems to have had the idea of controlling traffic by means of colored lights. He constructed a control device using oil lamps which were alternately revealed and concealed by means of a shutter. Like many another great earnest inventor, both before and after his time, he sought to inform government officialdom about his ingenious device and what it would do. Public officials remained convinced, however. that policemen should control traffic, and the disappointed inventor trudged back to his mill in Bradford to dwell in obscurity.

It remained for a firm of railway signal manufacturers to successfully build the world's first traffic signal using colored lights in response to an1866 suggestion by a Select Committee of London that recommended adoption of railway signal gear to street traffic. In mid-December, 1868, a "handsome" semaphore signal was installed at the intersection of George and Bridge Streets near the Houses of Parliament for the purpose of safeguarding Members of Parliament who had to negotiate the busy traffic streams. This semaphore was 22 fret high and had a hydra-headed appearance as a surviving drawing indicates (Fig. 1). Crowned with a gas light for visibility, the semaphore arms when extended in a horizontal position meant "stop." When lowered to a "droopy" 45 angle the message was "caution." At night a green light was employed with the "caution" position and a red light with the "stop" position.

Richard Mayne, London Police Commissioner, set forth the meaning of the semaphore by a proclamation.

By the signal "caution", all persons in charge of vehicles and horses are warned to pass over the crossing with care and due regard to the safety of font passengers. The signal "stop" will only be displayed when it is necessary that vehicles and horses shall he actually stopped on each side of the crossing, to allow the passage of persons on foot; notice being thus given to all persons in charge of vehicles and horses to stop clear of the crossing.

Manuscript received May 19, 1969.
The author is with the Highway Research Board, Washington, D. C,

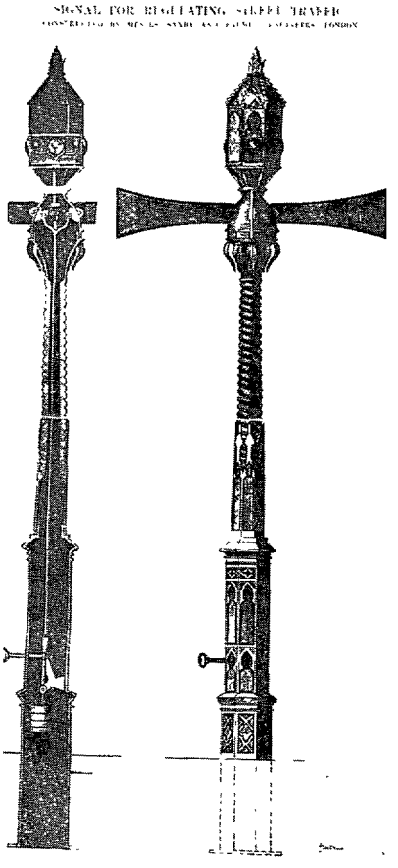

Fig. 1. "Handsome" hydra-headed semaphore (f 1868 installed to safeguard members of Parliament. It was crowned with gas light; arms extended horizontally meant "stop," arms at 45 degree angle meant "caution."

The entire idea of the signal was to give protection to pedestrians. Until this time, people were dependent on policemen's hand signals and, according to a newspaper rrport of the day, they were "often a very inadequate defense against accidents."

Staid Londoners came in such numbers to view the contribution to their safety that the police had difficulty in controlling the crowds. Enterprising street vendors set up nearby stalls and sold snacks and drinks to the sightseers. Police approved of the semaphore, and the inventors were in high hopes of future business throughout London and other British cities;. Officials came from the United States and the Continent to view it.

However, the injury of two policement while operating the semaphore and the death of a third due to a gas explosion brought the matter of the signal up for debate. (The gas was from a nearby main and had filtered through into the hollow semaphore pole. When the policeman tried to light the lamps the explosion occurred.)

In March, 1869, the question of "w hether the structure culled a semaphore . . . was conducive to the safety of the public" was brought up in the House of Commons and referred to the Police Commission, who, after studying the matter, recommended not only its retention but extension into other parts of London. The Home Office then got an improved semaphore designed and erected,

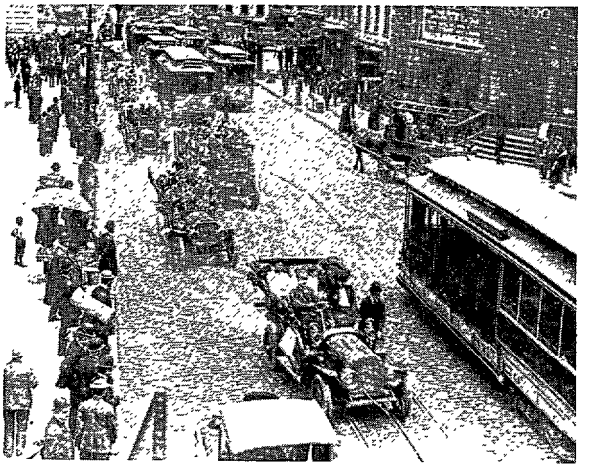

Fig. 2. Early days of the automobile Downtown New York City; horse-drive vehicles, street cars, and autos competed for space.

and the original was dismantled in 1872. Ironically, the inventors, by terms of their agreement, had to pay over half the expenses, reportedly some 300 pounds, for the cost of the semaphore and its operation [3].

Although it is very probable that, many other attempts were made to control traffic by colored lights after this London experience, no available account has come into easy purview. Perhaps some future delver will find other examples of early signals.

Again bridging the years, we find that after the turn of the century, as automobile traffic grew, inventors and innovators applied their talents to solutions of the ever-increasing traffic problem in the United States. The first patent in the field of traffic signals was evidently filed by a Ernest E. Sirine of Chicago, Ill. On April 28, 1910, Sirine filed a patent pertaining to a system of traffic control consisting of semaphores labeled "stop" and "proceed" which were activated by synchronous motors. This semaphore system was akin to that later used in Los Angeles. Calif., but insofar as is known no installation of a signal based on Sirine's patent was made. Sirine's patent was granted on November 10, 1910 [4].

In France another experiment concerned itself with a form of traffic tower, an innovation that was shortly to spread rapidly over the United States. In Paris, in 1912, an ornate bronze kiosk 15 feet high was erected at the Rue Montmarte and Grand Boulevard. A policewoman sat in a sort of glass showcase near its top and manipulated a revolving four-sided metal box that stuck out of the top of the kiosk. Opposite sides of the box were painted red and white respectively, for "stop" and "go". This amused the Parisian taxi drivers who joyfully ignored the signals while onlookers cheered. It is not surprising to learn that the kiosk was abandoned after only 22 days of use [5].

Due to the efforts of William Phelps Eno, who recorded his attempts to expedite traffic in New York, N. Y. we have a good picture of what the early days of traffic control by police were like (see Fig. 2). When autos were the exception rather then the rule, the principal duties of the small New York police force were to keep the peace

Fig 3. Early automobile traffic on Fifth Avenue, New York City.

among teamsters, as their slow-moving horse-drawn vehicles were a great source of arguments. When the auto came (Fig. 3) the police thought that these troubles were over because the auto possessed a greater speed, movement would be more fluid, and their task of maintaining order would be gone. Time has certainly indicated that this concept was wishful thinking.

Eno promulgated rules for "New York's finest" "to see that traffic is not delayed by vehicles loading or unloading, or being backed up to the sidewalk." Because the police were equipped with bicycles and motorcycles, they were able to apprehend those who wished to proceed at a faster pace, and because they could work quickly, they acted as instructors and supervised traffic generally. As an example of the accelerated pace of activity, in 1902 there were a "whole" three mounted policemen stationed on Fifth Avenue; by the end of the year, there were six. The next year a Bureau of Street Traffic was established and by 1908 they had 743 men; 138 of these were mounted and 18 had bicycles.

In order to regulate traffic Eno set forth manual and whistle signals for officers which, interestingly enough, were later adopted in some of the first traffic signals. In 1909 he made the following recommendation.

> One blast of the police whistle indicated that north and south traffic shall stop and that east and west traffic shall proceed. Two blasts meant that east and west traffic shall stop and that north and south traffic shall proceed. Three or more blasts were a signal of alarm and indicated the approach of fire engines or some other danger.

Unfortunately, the whistle method of control spread to other parts of the country but the concept of uniformity did not. Chicago, perhaps to be contrary, completely reversed the meaning of the one- and two-blast signals. In other systems which were in vogue at the time, a single blast indicated that a change was forthcoming; this was followed by the direction given by a manual signal. Another locality used a whistle to stop all traffic and allow pedestrians to move [6].

An innovation of the day was the semaphore or manually operated traffic control sign. New York's Deputy Police Commissioner had five semaphores installed at intersections on Fifth Avenue. These were an immediate success, and some SO more were added the same year with railway lamps topping them for night use [7].

Schad states that the first mechanical semaphore appeared in the United States about 1913 in Detroit, Mich., It consisted of four revolving blades set at right angles atop a light portable stand with the blades displaying the words "stop" and "go" on alternate faces. At night the arms had a signal lantern of the railroad type using red and green lights. In some cities umbrellas of the beach variety were employed, and the words "stop" and "go" were painted on the canvas the officer stayed underneath and rotated the umbrrlla as needed [6].

Also in the summer of 1918, a semaphoe signal for traffic regulation was installed at Chestnut and Broad Streets in Philadelphia, Pa. It was 6 feet high, constructed of half-inch iron rod and mounted on a cast iron base. Two arms were used marked "open" and "closed." Considered successful because of their good visibility, they replaced officers using the "whistle and beckon" method [6].

Electric semaphores were also recommended for Chicago, to be operated by a traffic officer having a raised position at the curb [6]. Louisville, Ky., introduced the semaphore system in 1915, having received frequent complaints from apartment house residents because of the disturbance that officers' whistles made [6].

In Richmond, Va., semaphore signals were installed about the year 1916, consisting of four arms painted white and red alternately and bearing the words "open" in black letters on white arms and "closed" in white letters on the red arms. Each arm was equipped with electric lights, showing through a red lens in the "closed" arm and a white lens in the "open" arm. The electric current for the lights was furnished by a storage battery in the shelter under the signal [6].

While the semaphore was thus gaining acceptance in the East! San Francisco was also experimenting largely as a result of two inventors, Benjamin M. Harris and Dr. G. G. Cnglieri.

In 1915 semaphores with automatic whistles were installed in San Francisco, Calif. The Harris device consisted of a double-pointed arrow bearing the word "stop" on either face, which could be turned through 90" by a small 110-volt motor mounted in a box just above. The motor also operated a police whistle which sounded two blasts as the arrow pointed one way and a single blast when it returned to the opposite direction.

When the crossing was to be cleared for an emergency, the arrow was made to revolve continuously and the whistle blew until shut off. At night the arrow was lit by two 40-watt tungsten lamps; a third lamp located in the red globe below was automatically put in the circuit when the alarm signal was given. The switch box operated by the officer had five controls; two governed the position of the arrows, the third operated the lights, the fourth controlled the alarm signal, and the fifth raised and lowered

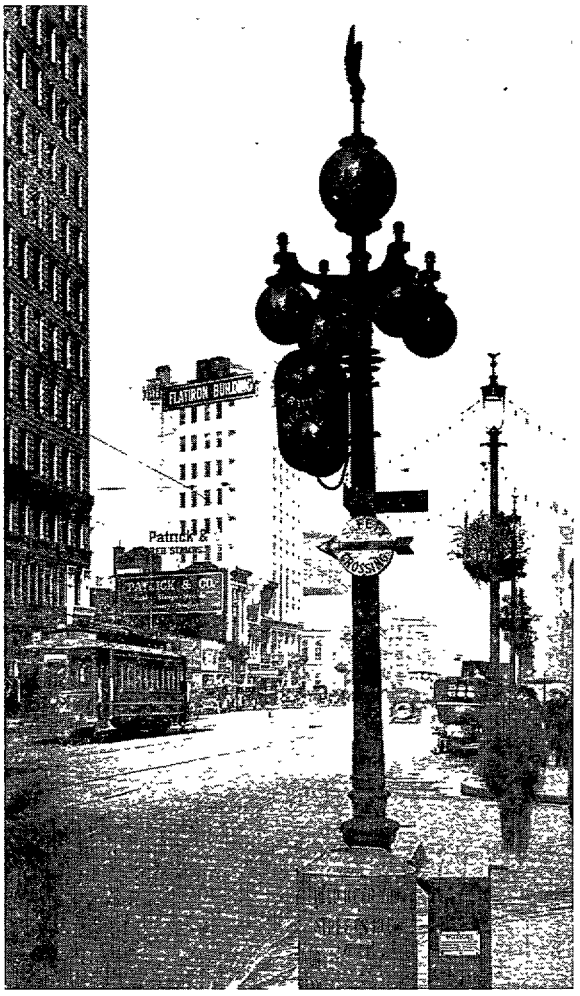

Fig. 4. Caglieri signal in San Francisco, 1913 vintage. (Sote devices showing in figure.)

the shutters to conceal the lettering and the arrow during the night hours, when the semaphore was not in use. The arrow was hung so as to be 2 feet below the trolley wires, and was supported on small steel cables. The complete weight was 45 pounds. The arrow was about 4 feet, it is believed. In case of repairs one had to get up to the signal or else lower it. The pump which supplied the air to the whistle was reciprocating and operated by a crank on the motor shaft. There were a great number of small parts, and chances for trouble appeared to be great. Because the motor operated only during the period that the signal was being given the current, power consumption was small. The effort of the traffic officer operating the signal was about the same as for the Caglieri signal, in the following discussion. Harris provided these for $250 each, figuring that the cost of operating and maintaining the signal for 10 hours each day of the month would not exceed $1.50 per month, and he guaranteed this on a B-month trial basis.

Caglieri's signals (see Fig. 4) seemed to be less of the semaphore type and more of the alternating-light type. They both were on trial in the spring of 1915 at the intersection of Third and Market Streets, San Francisco. In May the city asked for signals at three complex intersections on Market Street. Caglieri bid some $922 for the three traffic signals, consisting of 16 double red and green flash lights with double lenses and reflectors properly enclosed in cast iron boxes and controlled by drum switch and whistle. Installation would cost some $1240 for a total of $2162. Interestingly enough, the specifications for these three signals consisted of one page of written description and a small sketch of three intersections.

The Caglieri signal was further described as follows.

It consists of an electromechanical control device which operates a whistle and makes electrical contacts for red and green lights. One control device is required for each crossing and as many lights as desired can be operated from one control device. The control apparatus can be located on a post or within a cabinet. within easy reach for inspection and repairs. The whistle is operated by a rotary compressor driven by a small motor. The motor and compressors are running constantly, and when the whistle is not operating the compressor exhausts to the atmosphere. When the officer operates the signal, a mechanical contrivance closes the valve to the atmosphere and compels the air from the compressor to pass through the whistle. The signal has the advantages of flexibility, simplicity, ruggedness, and accessibility with correspondingly low maintenance cost. The effort on the part of the traffic officer in operating the signals is about the same as for the Harris signal.

In a later letter in June, Caglieri offered to supply one complete signal to handle traffic on each intersection, which consisted of four double red and green flashing lights properly enclosed in a cast iron box, and which was hung under the trolley wires in the center of the intersection and controlled by a drum switch with a whistle device, complete for $260. The current cost would average $2.25 per month. Additional signal heads were advocated by Caglieri because of the irregularity of the intersections [6], [8].

The foregoing is but a limited account of the semaphore era. The era of the traffic signal (as we know it today) and the era of the traffic tower were about to begin.

Prior historians have given the honor of having the first credited installation of signals to Cleveland, Ohio, where James Hoge filed a patent on his system on September 22, 1913. However, for some reason it was not granted until January 1, some four years and three months later.

However, the actual installation was probably completed on August 5, 1914, at the intersection of Euclid and 105th Street in Cleveland. Capable of being controlled by hand or an automatic timer, the installation had the basic essentials of a modern signal controller. There were eight' indications at this intersection, a novel feature being that the near side had four red indications while the far right side had four green indications. Also, at the time traffic was changed from green to red or vice versa, a bell was sounded so as to warn traffic of the impending change.

A half-block away was a fire station on 105th Street, and a switching arrangement was located there which enabled the firemen to turn all the signals red in all four

directions, thus stopping all traffic for the passage of the fire apparatus. Evidently, a second similar installation was made at 55th Street and Euclid Avenue several months later but Mackall [4] says that both of the installations were abandoned soon after.

A little later, in the May 27, 1916, issue of *Electrical World*, an advertisement was featured showing an electric traffic signal manufactured by a Mr. Painter, Baltimore, Md. This consisted of red and green Fresnel lenses with a light behind each lens. The lenses were alternately lighted to indicate to traffic whether to stop or go. What the results of this advertisement were is not known; apparently few, if any, installations resulted, however [4].

In June, 1916, the famed E. P. Goodrich, one of the founders and the first president of the Institute of Traffic Engineers, outlined a one-way progressive system of traffic control for New York City. He took his idea from the progressive system of train control used by the elevated railroad's car on the Brooklyn Bridge. No installation based on Goodrich's plan resulted, however, as far as is known [4].

Charles J. Reading, a city-employed electrician of Salt Lake City, Utah, in 1916 or 1917 installed a signal of his own design (constructed by Mr. Carter, a local tinsmith) which showed red and green lenses in four directions. It consisted of sheet-metal construction, it was circular in shape and about 20 inches in diameter, and it had eight standard railroad semaphore lenses, $8\frac{3}{8}$ inches in diameter. It was mounted in the center of the intersection and controlled by a police officer on one corner. Although this signal had all the earmarkings of a plumber's nightmare, it was instantly successful and shortly thereafter, five more signals appeared. Three of these were installed on Main Street and three on State Street; the entire six were connected electrically by cable and controlled from a central manually operated switch. The signal lights were connected in what would later be known as an alternate (then called staggered) pattern; by driving just at 20 mi/h, one could proceed through all of the signals (that is, three on one street) without a stop. Even as late as 1925, Salt Lake City did not choose to use the yellow indication with their signals [4]. Fig. 5 indicates what advertizers of these days thought would sell a traffic signal, that is, a traffic signal which "makes 'em stop."

Somewhat parallel in time to these developments in early traffic signals was the evolution of the "traffic tower." Evidently the first such tower or "crow's nest," as Eno had termed it, was the one installed at Woodward and Michigan Avenues in Detroit (see Fig. 6). It had a steel superstructure supported on a concrete base. The officer, stationed in the crow's nest about 6 feet off the street, operated the semaphore arms then in vogue. These displayed a "stop" and "go" message and used red and green lights at night. Some 20 000 vehicles per day used the intersection, then one of the busiest corners in the world.

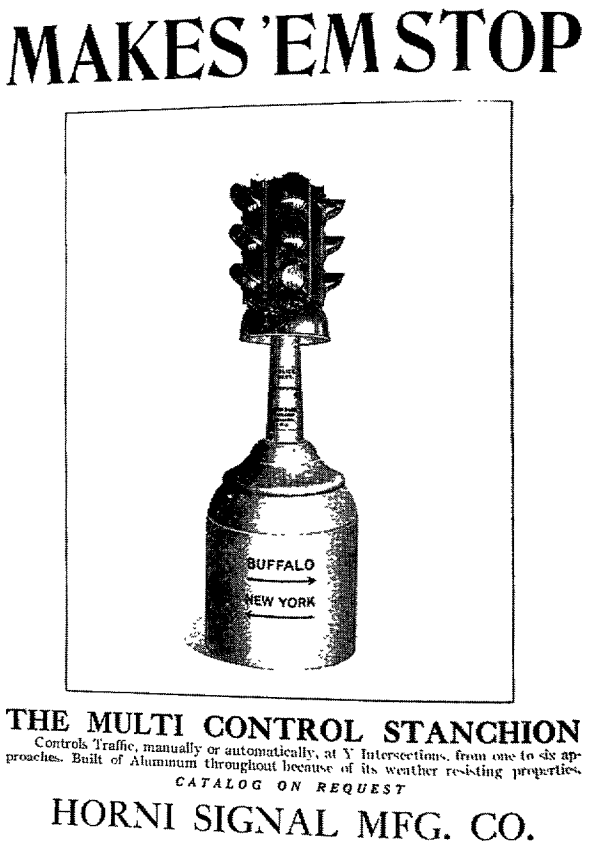

Fig. 5. Advertisement featuring a real "block buster" of a signal-engine block.

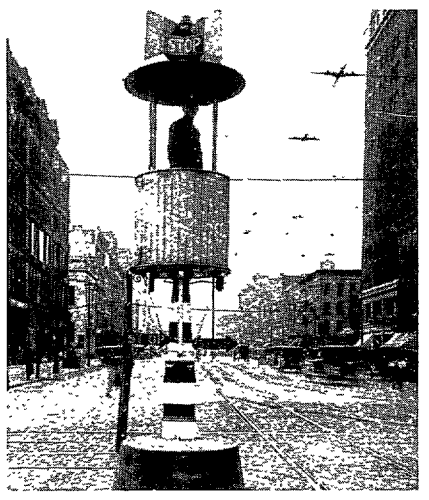

Fig. 6. An early "crows nest" or traffic tower, Detroit, with a manually operated "stop" and "go" semaphore at the top and under the platform.

In December, 1920, Detroit followed its initial installation with a more modern tower design; the city erected one at Michigan and Woodward Avenues and another at Woodward Avenue and Grand Circus Park. On each of these towers were 12 floodlights. Green, amber, and red indications pointed in each direction. For the first time in history, red, yellow, and green were used to control traffic. The meaning for these signals was "go" (green), "stop" (red), and "clear the intersection" (amber). The

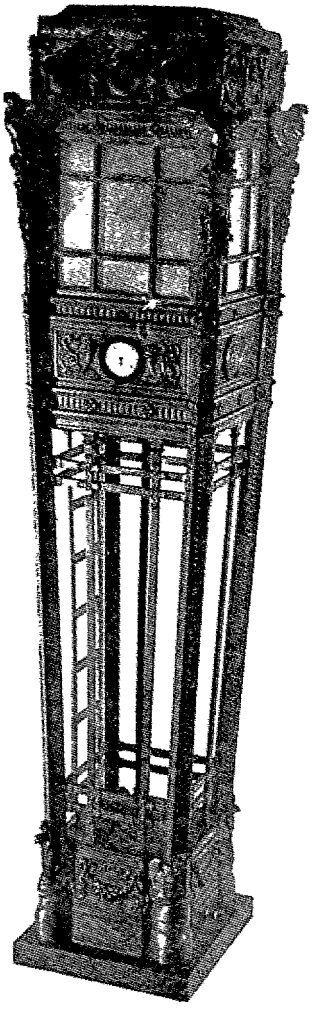

Fig. 7. Example of the bronze traffic towers used on Fifth Avenue, New York City. in the 1920s.

floodlight projectors were 12 inches in diameter and used 250-watt lamps. The manually controlled lights mere on the roof of the booth [4, p. 2].

Although the Detroit traffic towers were "first," those in New York (Fig. 7) received more publicity, and many still believe that those in New York were first. The building of them commenced as the result of the deplorable traffic conditions.

Dr. John A. Hariss, Special Deputy Police Commissioner of New Yorkm described the tower system

The results obtained through the installation of a unified system of signal control in the regulation of traffic in the City of New York have established the practicability of such a method beyond the shadow of a doubt. It is a decided step forward in the way of relieving congestion and expediting the movement of vehicular traffic in the busier centers, and contributes in no small measure toward the safety of pedestrians while crossing our thoroughfare5 where the heaviest volume of vehicular traffic is to be found.

Since this system was put into effect in what is conceded to he the most congested traffic thoroughfare in any of the larger cities of the world, that is, Fifth Avenue between 30th and 60th Streets, New york City, it at once demonstrated its efficiency in a manner to confound even the most skeptic, who viewed the situation as impossible of solution.

For several years prior to the installation of the flashlight system on Fifth Avenue, congested traffic conditions on that thoroughfare had become so intense as to make anything like affluent and expeditious movement of traffic quite impossible, and something very radical had to be done to cope with this situation. While the assignment, of traffic patrolmen to various street intersections and also the use of the "stop" and "go" semaphores were rendering a service as efficient as could he expected, both were entirely inadequate for the proper handling of the abnormal volume of vehicular traffic that had begun traversing Fifthe Avenue daily. It was plainly apparent that an innovation in the methods of traffic regulation must be instituted without delay before things arrived at the stage where they were beyond control. By actual test it was found to have taken as long as 40 minutes for a vehicle to proceed on Fifth Avenue from 57th to 34th Streets or in the reverse direction at certain times of the day, and at some specific points the traffic congestion had become so intense as to practically render the streets impassable.

After prolonged and deep study and consideration of various measures of relief, including a possible one-way regulation at certain periods of the day, it was felt that the solution was to be found in a method of signaling that would clearly indicate and control the movement of traffic over a reasonable distance; and the adoption of a flashlight system, using different colored lights as a medium of direction to proceed, stop, and change in direction, was then decided upon as the most effective of the contemplated plans to improve conditions.

Accordingly, signal towers were erected on Fifth Avenue at 57th, 50th 42nd, 35th and 34th Streets, modeled somewhat similar to signal towers on railroads, for the control of the movement of traffic on Fifth Avenue and cross streets by flashlights, telephone, and push-button signals operating between the towers and to be observed by the traffic officers assigned to duty at street intersections. The floors of the towers are twelve feet above the roadway so as to afford a clear view for their occupants, and the towers are so provided at the base as to sheer off passing vehicles, thus becoming, in addition to their specific purpose, 'Isles of Safety' for pedestrians crossing the avenue at those points.

The master tower, controlling the operation of the remaining towers, is located at 42nd Street, and the movement of traffic averages about one and a half minutes for that on the avenue, as against one minute for the traffic from cross streets. Prior to the change of signals a bell is rung to attract the attention of the policeman assigned to crossings that a change in the direction of traffic is about to take place. The telephones are used for the purpose of transmitting necessary police information between the towers, or in case of any disorder to transmit the signals, in lieu of the flashlights becoming disarranged.

The signals flashed from the towers indicate the following: yellow-traffic moves on Fifth Avenue and all cross traffic from side streets stops behind the building lines, or white limit lines when marked on the roadway; red-all traffic on Fifth Avenue, as well as side streets, stops behind the building lines, or white limit lines when marked on the roadway; green-traffic from side streets proceeds. The signals are in operation from 8 AM until 12 PM and regulate the movement not only of vehicular traffic, but also apply to pedestrians in crossing the roadways, which they must do at the regularly designated crossings.

Under the new regulation congestion has been eliminated, and the annoying and costly delay experienced prior to its inception has been reduced by more than 60 percent. It has also resulted

in a saving of wear and tear upon vehicles and the elimination of much inconvenience to individuals. Such excellent results have been ohtained from the system that we are endeavoring to obtain sufficient funds to extend it to the husier sections of other thoroughfares throughout the city not only in the Borough of Manhattan but in the Borough of Brooklyn as well.

The initial 1920s saw the growth of towers in all parts of the country. Most cities felt traffic towers were necessary to get the officer up and over the plane of traffic so he could observe better and manipulate his semaphores or colored lights or simply wave his arms around.

As examples of this traffic tower activity, in 1921 an installation was made in Knoxville, Tenn., consisting of six towers and shortly after that a trial installation made its appearance at Broad and Arch Streets, in Philadelphia.

In Chicago a system based on the New York traffic control tower system was installed on Michigan Avenue. Chicago's system was more of an automatic variety, however. Four major towers, 27 feet high, were located five and six blocks apart. Two of these controlled five subtowers, one controlled six, and one controlled four. The subtowers were erected at every block where a cross street intersected a boulevard and were 13 feet high. At the top of all towers, facing in four directions, were three signals, one above the other in a vertical line. The lenses of the lamps were sand-blasted so that they appeared as balls of light clearly seen even by those not directly in line with their axis.

A novel feature for both fire and traffic consisted of an 18- or 20-inch bell from which were suspended three arms carrying the traffic lamps. The signal to stop was indicated when the three lights were visible across the roadway. The moving traffic saw two lights only, one above the other. When used as a fire signal, the bell was sounded and one arm rotated in order to indicate the direction that the fire apparatus was to go. It is not known how long this system lasted, but towers were not in fashion for a very long period of time, even at their zenith of popularity [10].

Barnes [11] in speaking of the days he was a traffic engineer in Flint, Mich., tells of their ancient devices as follows (some rewording by author).

Movable intersection semaphore signs, manually operated, were installed in downtown Flint in 1916. The officer was placed in a small booth at the curb and the sign was set in a standard just outside of the booth; the officer leaned out through the window and turned it (the purpose of the booth being protection from the elements). Traffic toners with manually controlled interconnected lights mere used in downtown Flint in 1923. The heads were located in the center of the intersection on concrete abutments and some 13 intersections were controlled manually from two separate points. These towers were about 25 feet high. A considerable number of accidents seemingly were caused by the concrete abutments in the center of the highway.

Other cities also were adopting their unique tower signal systems. In Atlanta, Ga., traffic signals were suspended over street intersections, and they were electrically connected to a central tower. All of the distant lights were operated simultaneously from this tower [12].

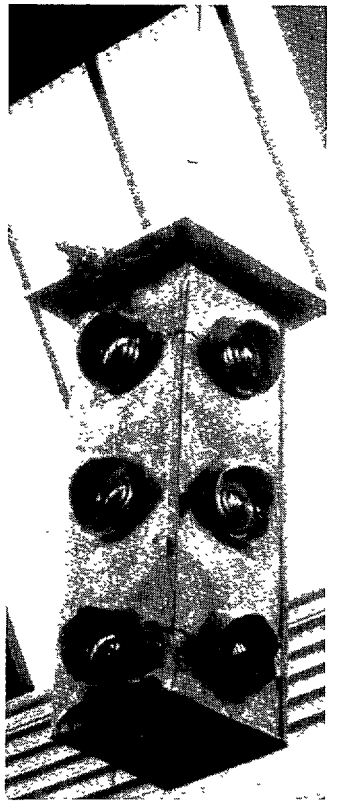

Fig. 8. William Potts' original "red," "yellow," and "green" traffic signal, now at Greenfield Village, Detroit. (Courtesy of the Henry Ford Museum, Dearborn, Mich

Los Angeles, Calif., had a system of combined semaphores and lights installed upon special posts at each curb corner. These operated from a central station that controlled traffic for a considerable area. In addition to the signal towers located several blocks apart, there were signal boxes suspended at every intersection between these towers which showed the same lights, not only to the nearby drivers on the same street but also to the drivers who were approaching on the cross streets. The ringing of a small alarm bell at each intersection announced the coming change of signals [6].

The traffic signal head, as it evolved, was bound to emerge somewhat in the form it is today. Generally, William L. Potts of the Detroit Police Department is acknowledged as the originator of the first three-color (red, yellow, and green) four-direction traffic signal. Of the overhead suspension type, it was installed at the intersection of Fort Street and Woodward Avenue in December, 1920, where it remained for 4 years. Built of wood with a metal shell, the signal used 4-inch lenses, and the lights were manually operated by a police officer (see Fig. 8). Although Potts' achievement was evidently not recognized at the time, a U. S. Court decision in 1928 established that he, indeed, was the official inventor of the first four-way traffic light.

In 1921, Potts, who had been designated Superintendent of Signals for the Police Department, installed an "automatic" light system in 13 of Detroit's traffic towers on Woodward Avenue. The automatic feature was the electric interconnection of the traffic signals which were controlled from a single location by a police officer. Potts also made many other noteworthy contributions to the young traffic signal era [13].

The Crouse-Hinds Company, long a stalwart in the field of railroad signaling. made its entry into the automotive traffic signal business about this time. The following is from Mackall [12] who was a signal pioneer with the Crouse-Hinds Company.

Our (Crouse-Hinds) sctivity goes back to 1921 at which date we engineered our first installation of traffic control lights for the City of Knoxville That installation con&ted of a number of lighting units which were designed for other purposes but which were installed on towers and controlled by an officer in a tower. After the original one (Knoxville) we planned and installed six more, all of which were independently operated and there was no fired connection between them. (This was done in January, 1921.)

Later on in 1921, installations were made in Detroit and Augusta In February, 1922, we made an installation at one intersection in Houston, Tes. This was a success and in March 1922, we designed the first interconnected (electrically) traffic signal system controlled by an automatic timer. This consisted of 12 intersections, mostly on Main Street. It was controlled from a tower installed at Main and Capitol Streets in Houston, and the automatic timer, manual control switch, and relay panel were all installed in the tower. The system was operated automatically throughout the hours of the day.

San Francisco, not to be outdone and having progressed since the era of its Caglieri signal and Harris semaphores, came out with its own individualistic Wiley signal (shown in Fig. 9) which was to endurr for almost 40 years. Innovated by the city electrician of San Francisco, it consisted of an eight-sided cylinder which oscillated back and forth 45o. On the eight sides of the revolving cylinder were grooves or slots that allowed glass plates with the signs, "stop" or "go" to be inserted and held in place. These plates were made of white translucent glass with a flashing of red glass for the word "stop" and green flashing for the word "go."

The signal had a stationary outer shell or cover which was also eight-sided, and which had one, two, three, or four sides open, depending on where the signal was used. A single signal could be used in the center of a four-street intersection with all four sides open. two showing "go" while the other two could show "stop"; or four one-way signals. one at. each intersection corner, could be used.

The signal struck one mechanical blow on a lo-inch gong at each signal change. The cylinder operated the bell hammer which also acted as a bumper or dash pot and prevented excessive jarring of the cylinder at the end of each operation. The lo-inch bell was in the bottom of the signal, and the outside plates were slotted to allow the sound through. If the signal were mounted on a trolley pole, a bracket was used; it was also capable of either being mounted on top of a pipe or suspended. The signal was equipped with a 75-watt lamp which was used at night, and it could be read 300 feet [14].

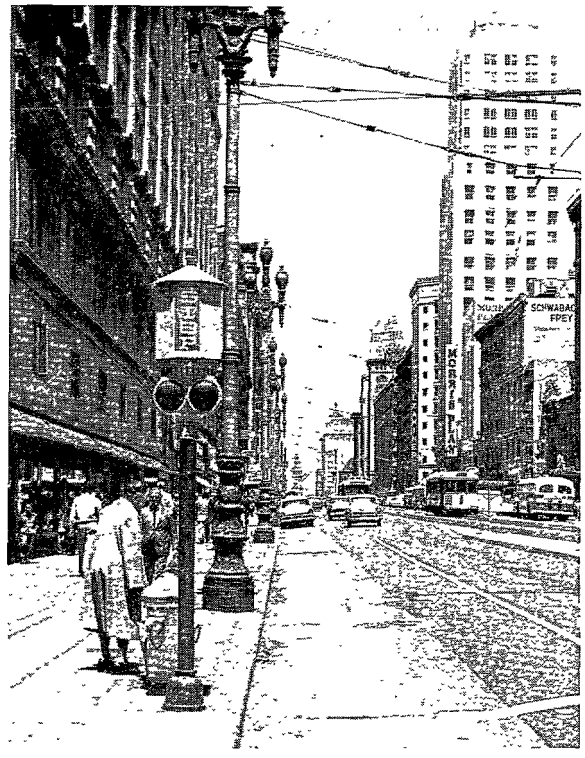

Fig. 9./ When signals dating back to the early 1920s. Until a few years ago these were common in San Francisco.

The signals in the early 1920s were characterized by their individualistic designs. Uniformity would shortly become important and dominate signal head design, but until it did, experimenters had their day (see Fig. 10).

Many of the early signals in Los Angeles were originally installed by the Automobile Club of Southern California. One such signal (described by Lefferts [15], Manager of their Public Safety Department) erected in 1924 had a circular face upon which an indicator hand revolved similar to a clock and set forth the amount of "stop" and "go" interval that the motorist had left. This was also advantageous to the pedestrian as he could ascertain the amount, of time left to cross the street. However, this same information encouraged motorists to take undue advantage of the "go" interval remaining and accelerate to cross the intersection before the signal changed. Another disadvantage was that it was not visible for any great distance on the intersection approach, and reflections from the sun's rays made for erroneous indications. Evidently, its use was limited and it was abandoned after a short time. This signal was installed at the intersection of Wilshire Boulevard and Western Avenue, replacing a rotary traffic experiment.

Pennsylvania also had its share of unorthodox installations as the following examples illustrate. Sometime in

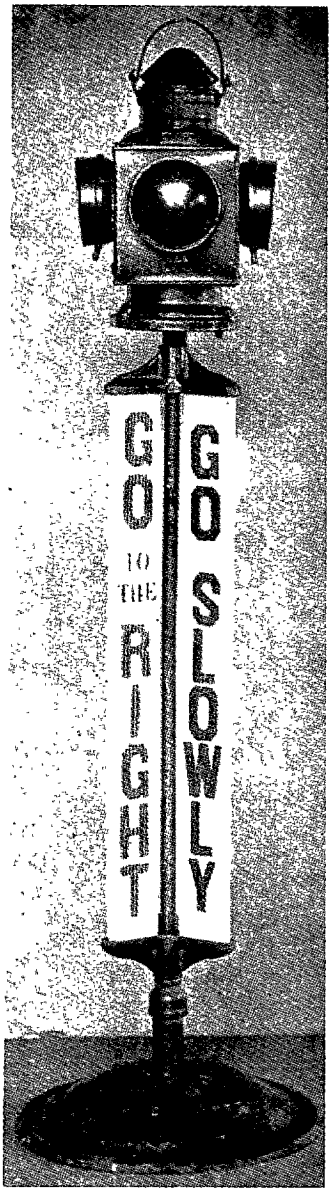

Fig. 10. Example of the many unorthodox devices used for traffic control at intersections in the early 1920s.

early 1924, Charles T. Smith, then Superintendent of Police, Haverford Township, Delaware County, had a local plumber manufacture a traffic signal out of an old 30-gallon hot water boiler. Three colored lenses, red, amber, and green, were mounted in this contraption, and it was operated by some sort of a homemade timing device. It was mounted on a concrete block pedestal about four feet square and placed at the intersection of Darby Road and West Chester Pike, Llanerch, Pa. However, a fatal accident occurred at the intersection, bringing the device into disrepute, and it was removed; the intersection, ironically enough, operated without a signal until 1945 [16].

In the early spring of 1924, Major General Smedley Butler (U. S. Marine Corps, Ret.), Director of Public Safety, Philadelphia, borrowed a searchlight from the General Electric Company and placed it in the City

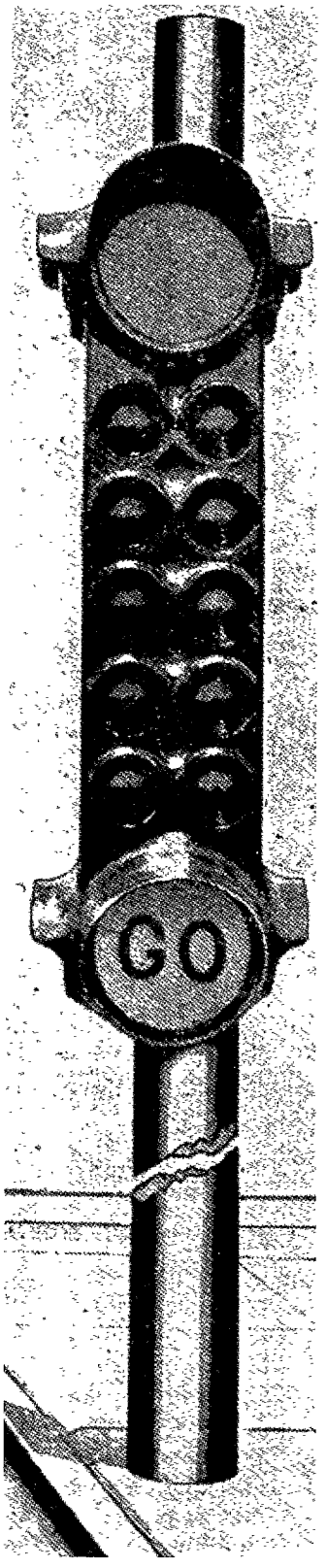

Fig. 11. The 1924 Attica; it had ten small indications and two large indications for each direction of traffic, and was, perhaps, the most unique signal ever devised.

Hall Tower near the clock, facing north on Broad Street. This light was an extremely high candlepower carbon arc searchlight. The idea behind the operation was quite unique. The light would remain turned off for two minutes; during this time traffic would move on Broad Street. Then the light would be turned on for one minute; during this period Broad Street traffic stopped and cross street traffic moved. The object of the light was to guide the police officers who were directing traffic. However, while the traffic going south on Broad Street could see the light a considerable distance north, those going north could not see it at all. The large light was used for some 45 days from 8 AM until 12 midnight each day before it was turned back to General Electric, the experiment being deemed unsuccessful.

Perhaps the most unique signal of these early days was the Attica signal. The following account [17], [18] (adapted from contemporary sources) probably indicates why a large number were *not* installed. For a considerable period of time, however, these signals were to be found in many small communities (see Fig. 11).

The Attica traffic control system which has been developed by the Attica Traffic Signal Company of Harrisburg, Pa., is constructed with a view to the promotion of more efficient discipline of traffic through the cooperation of drivers, pedestrians, and police officers. The device is equipped with a series of five lamps in addition to the stop-and-go equipment. These lamps are so wired that they work in conjunction with the stop-and-go features being put out automatically at regular intervals, one after another, until all are out, and at this point a change in direction is promptly provided. By this means a glance at the signal reveals the approximate number of seconds before a change in direction is expected. This advance information enables a driver to comply readily and removes hasty and ill-advised action.

On either side of the signal a special lens visible to the pedestrian serves as his guide, enabling him to cross safely. The signal is equipped with an audible alarm synchronized to sound the moment a change in direction takes place.

This signal is located at the near right position. The device may be operated manually or automatically or a series of intersections may be synchronized. A standard motor switch timed to meet the conditions gives the desired time change intervals. 50-watt bulbs are used behind the large lens and 10-watt bulbs behind the small ones; 100- and 25-watt lamps could be used, respectively, by making a few adjustments in focal length. The signal is cast of aluminum, weighs 70 pounds, has a maximum length of 44 inches and a distance between centers of the large lenses of 34 inches. The maximum width is 14 inches. The large lenses are 8 inches in diameter.

The year 1923 saw a most unique traffic control signal installed in Minneapolis, Minn. (see Fig. 12). Known as the Griswold "Bobby," it consisted of a square post some 6 inches wide and some 3 to 4 feet high, which was mounted on a heavy cast-iron base sunk in the pavement, usually in the center of an intersection. A set of coil springs kept the post in an upright position but allowed it to be run over or knocked over by passing vehicles. After their passage it would spring back to its

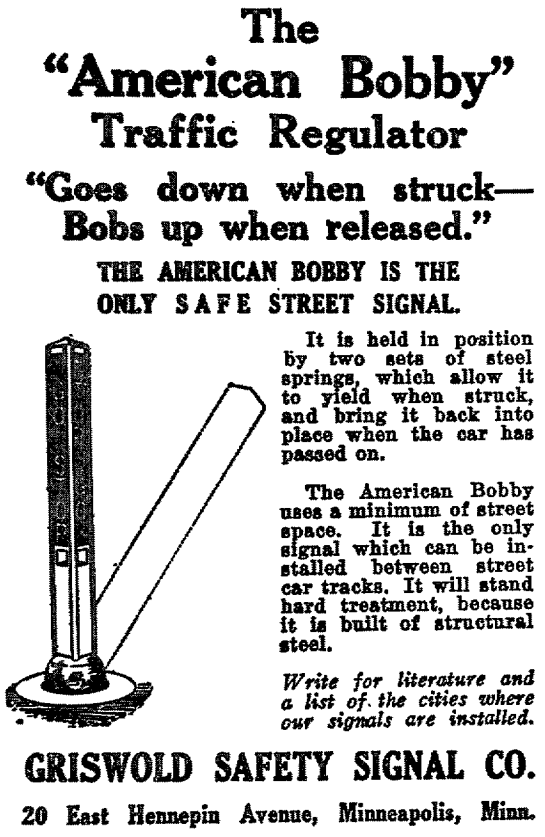

Fig. 12 Advertisement for this traffic regulatory device appeared in 1924.

upright position. On the post were vertical rectangular panels that had the legends "stop" and "go" arranged with colored glass letters illuminated from within. As light bulbs and glass letters are subject to breakage whenever the post was hit, excessively high maintenance costs were experienced with this kind of signal. The post rotated and displayed either "stop" or "go" to each of the four directions. These signals were also introduced in Buffalo, N. Y., and other cities but seemed to be used in great numbers only in Minneapolis, Minn., where they lasted for many years [19].

As if to counteract signals such as the "Bobby," Dr. Mackey of Lancaster, N. Y., devised a three-section signal head having four faces with independent lights for all lenses, instead of using a single light to illuminate all four faces as most of the early types did. An experimental installation of Mackey's signal was made at Tupper and Main Streets in Buffalo probably in 1922 [19, pp. 11–12].

Klug and Smith manufactured a type of post signal mounted in the center of an intersection that featured large rectangular heads in which the color indications were rectangular glass panels instead of circular lenses. Their first installation was at the intersection of Fifth and St. Peter Streets, St. Paul, Minn. [19].

A bigger signal (Fig. 13), adopted from an advertizer of the day, shows General Electric approach to the traffic-signal problem. Assuming the motorist could not spell, the

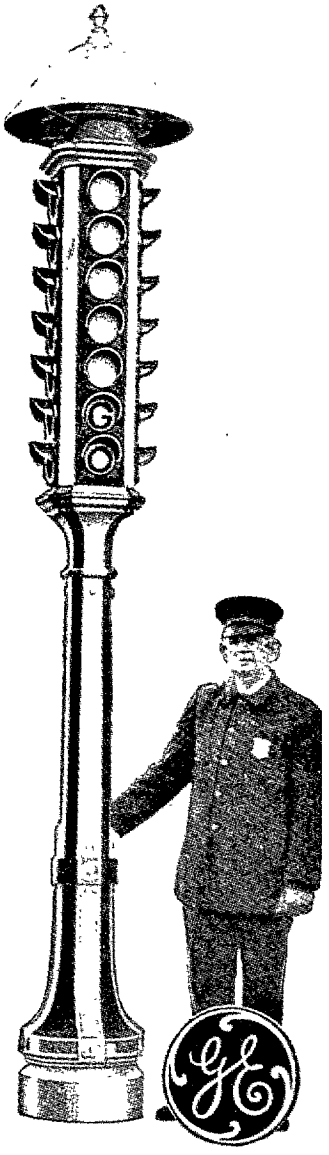

Fig. 13. General Electric signal of 1925; the top four indications, when illuminated, said "stop."

signal was designed to indicate the message "stop" in lenses with the individual letters on each lens. When the "stop" message went off, two lenses would be illuminated that spelled out the word "go."

Crouse-Hinds did not allow its new market for signals to go begging in view of the competition springing up. In the summer of 1923, they designed the first one-way three-section signal, capable of being both horizontally and vertically mounted, and installed it in Rochester, N. Y. Their original installation at two intersections was rapidly expanded to control all of Main Street. Main Street was an extremely long street; three master traffic towers were installed and several sections of street operated from a tower. These towers were also designed so that all could be interconnected and operated that way. Also in 1923, Crouse-Hinds brought out the first automatic variable timing switch and this enabled the total period and split to be varied. This provided flexibility heretofore unavailable but also made

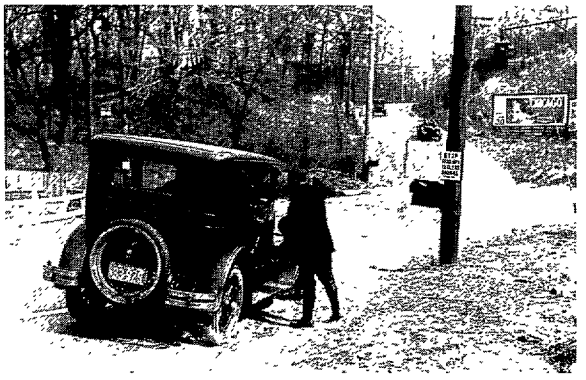

Fig. 14. Sound-actuated signal, inventor Charles Adler, Jr.'s automobile-horn-actuated signal of the 1920s, first used in Baltimore.

for a large and expensive controller so in 1924, Crouse-Hinds introduced the first induction disc automatic variable-timing switch which was small, compact, and cheaper. This was later followed by the synchronous timing switch [13].

In the early part of the 1920s the automatic continuous flasher was introduced, and this device took the country by storm. These devices were usually mounted on a sloping rectangular column of ample dimensions and placed prominently in the center of the intersection, usually on a small island or as part of the embryo channelization efforts of the day. These flashers were extensively developed by the American Gas Accumulator Company being derived from their marine buoys and channel markers which used carbide gas as the source of illumination. Usually the supporting column became the home of what little guide signing there might be in those days or else served as a repository for local advertising. These flashing beacons were around for many years and their descendants are still numerous today [20].

All of the early signals relied on some type of electrical switching apparatus to change the light indications. The manufacturers of these early devices used brass and copper in great profusion. The employment of electronics was still a few years away and the idea of actuation or allowing for the actual presence of traffic did not come into successful use until the latter part of the 1920s.

The early 1920s saw a great road-building effort spring up. World War I had made the public conscious of automotive transportation, and acceptance of the automobile then started the climb to the problems we have today. Standardization attempts aimed at traffic devices seemed to evolve at this time, and the motorist who ventured forth began to find more similarities and fewer differences in the devices to which he was exposed. In the mid-1920s, secretary of Commerce Herbert Hoover's call for a national conference on street and highway safety set the stage for planned attempts at standardization. His interest in this problem continued through his presidency, and most of the uniformity concepts were to take place during the period of his interest. Charles Adler, Jr.'s automobile-horn-actuated signal of the 1920s, first used in Baltimore, is shown in Fig. 14.

A very great problem in any type of historical writing is the dependence upon finding what has gone before (pictorial or written) and then the evaluation and interpretation of this material. Certainly some amount of selectivity and subjectivity goes into this process. For this brief account secondary sources were chiefly relied on; the primary sources are items such as the daily newspapers, but perusal of any material like this has been out of the question. The author hopes to continue his research forward in time and also hopes to be able to supply many of the missing tantalizing details that would make this work a more valuable document.

References

[1] W. M. Powell, *Signs.* Washington, D. C.: Institute of Traffic Engineers, p, 102.
[2] F. C. Breckenridge, "Fifty years of signal lighting," Illuminating Engineering Society, Kept., pp. 1-2, 1958.
[3] L. E. Wells, "The story of stop and *go," British Petroleum Shield,* vol. I, May 1966.
[4] K. W. Mackall, -"The history and development, of modern traffic control," Crouse-Hinds Co., Syracuse, N. Y., Bull. 2561, p. 1, 1941.
[5] R. Jarman, "The nuisance we can't do without," *The Saturday Evening* Post, p. 53, January 9, 1954.
[6] B. T. Schad, "Traffic control at signalized street intersections," Ph.D. dissertation, University of Michigan, Ann Arbor, 1935, p. 11.
[7] R. J. Lackner, *Lackner's History of Traffic-Controlled* Signals. 1947.
[S] Correspondence and files, Office of the City Engineer, San Francisco, 1915.
[9] J. A. Harris, "Signal control of traffic," *Trans. Illuminating Engrg. Soc.,* pp. 2-G-247, 1922.
[10] "Traffic control," *Trans.* Illuminating Engrg. Soc., p. 729, 1924.
[11] Correspondence from Henry Barnes, February 27, 1945.
[12] Correspondence from K. W. Maekall, October 13, 1944.
[13] S. Moyer, "Mr. traffic light," Motor News, pp. 14, 15, and 27, March 1947.
[14] K. W. Mackall, "Traffic regulation," Crouse-Hinds Co., Syracuse, N. Y., Bull. 212, pp. 18-20, 1922.
[15] Correspondence from E. B. Lefferts, December 28, 1944.
[161 Correspondence from W. S. Canning, October 28, 1946.
[17] "An electric traffic control device," *American City,* August 192-L
[18] "Street traffic control devices" (advertisement), Attica Traffic Signal Co., Harrisburg, Pa., January 1925.
[19] W. M. Powell, *The Evolution of the Traffic Control* Signal. Washington, D. C. : Institute of Traffic Engineers, p. 12, 1944.
[20] W. M. Powell, *History of Signals.* Washington, D. C.: Institute of Traffic Engineers, pp. 109-1 10, 1944.

The Highway Research Board-Electronics and Information

WILLIAM. N. CAREY, JR.

Abstract-The Highway Research Board (HRB) was established in 1920 as a unit of the Division of Engineering, National Research Council, under the corporate authority of the National Academy of Sciences. Its purpose then, as now, was fourfold:

1) to stimulate highway research
2) to correlate highway research
3) to make known the findings of highway research
4) to undertake, when appropriate, special highway research projects.

The interest of the HRB in electronics goes back many years. Many of its committees have been concerned with the use of computers, photogrammetry, instrumentation, traffic surveillance and control, and similar uses. Test instrumentation and data reduction techniques, developed at the HRB's large field tests of highway pavements in the 1950s were highly sophisticated at the time.

The services of the HRB include the Highway Research Information Service (HRIS), which became operational in 1967 and represents one of the most complete compilations of information on highway-related research available in the United States. The scope of the information stored in the system is as broad as the problems of planning, building, maintaining, and operating transportation systems. Subjects range from parking regulation to soil stabilization, from aggregates to aesthetics, from hydrology to psychology, anything having to do with highway travel or its interaction with other modes of transportation.

The science of information transfer is progressing very rapidly. The HRB will keep abreast of new developments in technology; therefore, HRIS, the Maritime Research Information Service (MRIS), and the Transportation Research Information Service (TRIS) necessarily will be under a continuing state of review and will be modified from time to time to keep up with new developments as soon as they are proven effective.

Manuscript received July 22, 1969; revised September 30, 1969.
The author is with the Highway Research Board, Washington, D.C.

The Highway Research Board

FOLLOWING the end of World War I, it became apparent that progress in the United States depended in large measure upon the improvement of the highway system in the country. There existed, however, large gaps in our knowledge of both the physical relationships involved in highway design and construction and the means for financing large public works programs. A research program of significant magnitude was called for.

On November 11, 1920; the Sational Research Council (NRC), at the request' of the Bureau of Public Roads, the state highway departments, the American Society of Civil Engineers, and a number of highway-oriented

organizations and educational institutions, created the Highway Research Board (HRB). The purpose of the new board was fourfold:

1) to stimulate highway research
2) to correlate highway research
3) to make known the findings of highway research
4) to undertake, in house, certain special highway research projects.

The HRB was established as a unit of the Division of Engineering, NRC, operating under the corporate authority of the National Academy of Sciences. It comprises an Executive Committee, a staff, and an affiliated membership associated either by supporting membership or by membership on committees. The HRB today, as when it was established. is therefore a nongovernment organization, although its ties with the government on all levels have been strong through the years.

Principal financial support for its activities is from the 50-state highway departments and the Bureau of Public Roads. Many industrial organizations, trade associations (notably the American Iron and Steel Institut,e, the Portland Cement Association, and the Asphalt Institute), service, organizations consultants, educational and research institutions. transportation authorities, and thousands of individuals all over the world also contribute to its support.

The HRB operates with a small paid professional staff that serves as a secretariat for an extensive committee structure. Committeemen from government agencies. universities, and industry serve without compensation.

In recognition of the increasing emphasis on the "systems," or "balanced," approach to transportation problems, the HRB in recent years has modified its scope to permit the development of a broader program which considers other modes of transportation as they interact with highways. Thus the purpose of the HRB today is to advance knowledge concerning the nature and performance of transportation systems through the stimulation of research and dissemination of the resulting information.

The scope of the HRB, designed to accommodate its modified purpose, permits it to give attention to all factors pertinent to the understanding, devising, and functioning of highway and urban transportation systems and their interrelationships with other aspects of total transportation. The HRB also concerns itself with the planning, design, construction, operation, maintenance, and sa ety of facilities and their components, the economics, financing, and administration of the systems, and their interactions with the physical, economic, legal, and social environment which they are designed to serve.

To be precise concerning the relationship of the HRB to its parent organizations today, the HRB is a unit of the Division of Engineering, SRC, which in turn serves both the National Academy of Sciences and the National Academy of Engineering.

The HRB occasionally conducts, in its Special Projects Division, in-house research for the government or other sponsors. These are generally of a nature such that other agencies are not available or appropriate for the conduct of the research. More usually, however, the HRB acts as a catalyst bringing together in a logical, orderly, directed manner the voluntary and quite considerable talents of the outstanding minds in the state highway departments, federal agencies, state and local governments, universities, industry, consulting firms, and other transportation-oriented organizations. Essentially then, the HRB is a talent pool that encourages and helps organize research programs and makes known the findings through various means to those who can best put them to use.

Research needs are determined and research activity is stimulated primarily through the highly developed system of technical committees of the HRB, operating under an organizational structure of three groups supported by staff specialists in the broad areas of economisc, administration, design, materials, construction, traffic operations, safety, soils, urban planning, and laws. There are over 100 committees, each concerned with a relatively narrow subject area, operating within these areas. Over 1800 dedicated professionals, from the organizations mentioned earlier. voluntarily contribute to the work of these committees. From the work of these committeemen and their associates comes new inlormation in the form of papers and reports. Every January, over 3000 top administrators, engineers, and educators from here and abroad, gather in Washington, D. C., for a week-long annual meeting of the HRB to present and listen to these reports, to participate in conferences and committee meetings, and just to learn what is new in all areas of highway and related transportation research. The papers presented at this annual meeting and other HRB conferences and workshops form the nucleus of the rather substantial publications program of the HRB. Last year, for example, over 11 000 pages of significant information nere published in 113 separate books. Over 400 000 copies of these publications were distributed throughout the United States and 73 other countries of the world.

The activities of the HRB are grouped under four broad areas : administration, special projects, technical activities, and the National Cooperative Highway Research Program (SCHRP) .

The technical activities staff is the largest of the four and is responsible for a major portion of the HRB effort during the year. This staff furnishes support to the functional groups and committees, makes field visits, develops meeting programs, recommends the content of HRB publications, screens the input and output of their extensive computerized information storage and retrieval systems, and provides technical liaison with the NCHRP and the area of special projects.

The NCHRP is a 3.5-million-dollar-annual-contract research program administered by HRB for the state highway departments and the federal Bureau of Public Roads. It deals with problems of concern over wide areas of the United States that are too large or complex for attack by the research program of an individual state.

ELECTRONICS AND THE HRB

The interest of the HRB in electronics goes back many years. Many of its committees have concerned themselves with the use of computers, photogrammetry, instrumentation, traffic surveillance and control, and similar applications. Many related papers have been presented at HRB meetings. Test instrumentation and data reduction techniques developed at the HRB's large field tests of highway pavements in the 1950s were highly sophisticated at the time.

The HRB has maintained a Special Committee on Electronic Research in the highway field for the past ten years. This year the continuing electronics-research activities of the HRB were assigned to a new committee on Communications in the group concerned with Traffic and Operations. The old special committee has been concerned with the use of electronic techniques and equipment whether its application was in design, construction, traffic control, data processing, or elsewhere. The current Communications Committee is limiting its work at the outset to the identification of communications requirements of the highway system. It will also concern itself with both correlation of research efforts on subsystem designs and also the encouragement of the development and implementation of integrated transportation communication systems. Under Chairman R. C. Hopkins the members of this committee are currently engaged in a study of highway communications needs for a "typical" state. Individual members are looking in depth into the following areas :

disabled vehicle assistance
emergency assistance (accident, illness, etc.)
emergency medical assistance
highway conditions (detection, observation, reporting)
highway maintenance and repair
merging and freeway control system
modification of variable-message highway signs
obstacle removal
overtaking and passing information system
road-condition information (dissemination)
route-guidance system
routing information
safety information (preparation and dissemination)
snow removal
traffic data collection and reduction
traffic-flow control
vehicle-to-vehicle information
automation.

When the members have identified the needs in these areas for several specific functional classifications of highways, they will be brought together to develop a composite needs picture. Hopefully, this will tell government and industry something more than is currently known about, the size and shape of the highway communications systems needed in the future. Such information is expected to be of great value in guiding the orderly development of needed devices and systems. It should prevent considerable wasted effort in developing unnecessary elements.

As previously mentioned, several other standing committees of the HRB have a vital interest in electronics. Among these are the Traffic Control Device Committee, with a strong interest in the use of electronic detect on and computing devices and their application to traffic signal controls of all types. The application of electronics is also important to committees concerned with insuring quality control of construction activities and of materials used to build and maintain roads and bridges. Data collection and processing for prediction of urban development' and planning for the highway needs of tomorrow would be almost impossible without modern computers.

In recent years in the annual meeting of the HRB, papers have been heard on such subjects as the following:

A Systems Analysis of Highway Communications
Electromagnetic Compatibility-A Necessity for Highway Communications
Communications Requirement's in the Methodology of Automatic Control of Highway Traffic
Pulse-Code Modulation
The Surface-Wave Line for Transportation Communication
Study of the Feasibility of Using Roadside Radio Communications for Traffic Control and Driver Information
An Evaluation of the Northway Emergency Telephone System
Experimental Route-Guidance System
Driver Information Requirements and Acceptance Criteria for Experimental Route-Guidance System.

These are samples. The list could be quite long even if restricted just to items published by the HRB. What of the other electronics research relative to highway needs'? How can researchers be made aware of what is going on elsewhere and what has previously been done to avoid duplication and waste of effort? The information storage and retrieval system described in the following section is a partial answer.

THE HIGHWAY RESEARCH INFORMATION SERVICE

It became apparent some time ago that, the increasing highway research activity, not only in the United States but throughout the world, required that the traditional HRB information services be augmented. The approaches of the past, however successful, were becoming inadequate.

In early 1963 the Executive Committee of the HRB asked for an investigation of the pros and cons of an automated information storage and retrieval system to supplement the existing information services of the HRB. A comprehensive study, involving talks with engineers and researchers in the highway field and a thorough examination of existing information systems and techniques, made it plain that such a system would indeed be of great value. Funds were made available in

```
09/25/69          HRIS SELECTIONS      55 IEEELS 01


2R53 060313

AUTOMATED TRAFFIC CONTROL
                                                        PROJ. NOS.
RES AGY<  ROAD RESEARCH LABORATORY /UK/

INVESTIGATOR< CARDEW KH
              MARTIN JA
              PENDYRE S

SPONSOR<  MINISTRY OF TRANSPORT, LONDON /UK/

STARTED          STATUS< ACTIVE    MAY68   EST COMPL<
COST ESTIMATES                  CURR YR,                  TOTAL

  METHODS FOR PRODUCING A GUIDANCE SIGNAL IN VEHICLES BY A
BURRIED WIRE TECHNIQUE HAVE BEEN DEVELOPED AND THE
FEASIBILITY OF AUTOMATIC GUIDANCE HAS BEEN DEMONSTRATED.
GUIDANCE WORK IS PRESENTLY CONCERNED WITH PROBLEMS OVER
REINFORCED CONCRETE AND COST-EFFECTIVENESS STUDIES. A
PRACTICAL ANTI-COLLISION DEVICE IS ESSENTIAL TO THE USE OF
GUIDANCE. SURVEY OF POSSIBLE METHODS, INVLUDING MICRO-WAVE
RADAR IS NOW FEASIBLE AS VEHICLE EQUIPMENT, IS IN HAND TO
DETERMINE A PRACTICAL SYSTEM.
  REPORTS ISSUED:
  GUIDING AND CONTROLLING CARS BY ELECTRONICS, C.G. GILES,
NEW SCIENTIST, VOL. 15, PP. 664-666.

     INTERNATIONAL ROAD FEDERATION          IRRD R27211
```

Fig. 1. Typical HRIS document record for summary of ongoing research project.

```
09/25/69          HRIS SELECTIONS      55 IEEELS 01


3C53 021720

DRIVER INFORMATION REQUIREMENTS, DISPLAY CONCEPTS AND
ACCEPTANCE FACTORS FOR AN ELECTRONIC ROUTE GUIDANCE SYSTEM

EBERHARD JW

SERENDIPITY ASSOCIATES                          FEB69
BUREAU OF PUBLIC ROADS /US/
FH-11-6805, TR301-69-12, 35-45-032

  THE PURPOSE OF THIS STUDY WAS TO ANALYZE THE ROUTE
GUIDANCE INFORMATION REQUIRED AND PREFERRED BY DRIVERS.
REQUIRED DRIVER INFORMATION WAS DERIVED BY DETERMINING HOW
AN FAMILIAR DRIVER NEGOTIATED A GENERIC INTERSECTION. THE
GENERIC INTERSECTION WAS DEFINED IN TERMS OF< (1) CHOICE
POINTS, (2) CHARACTERISTICS OF THE APPROACH TO THE CHOICE
POINT, AND (3) CHARACTERISTICS OF EXIT PATHS. A DRIVER TASK
ANALYSIS WAS PERFORMED TO OBTAIN ESTIMATES OF TIME AND
INFORMATION REQUIRED TO NEGOTIATE COMPLEX INTERSECTIONS.
THIS ENABLED A DETERMINATION OF DRIVER INFORMATION
REQUIREMENTS< (1) DIRECTLY, FROM THE STEP BY STEP TASK
ANALYSIS AND INDIRECTLY, FROM THE ESTIMATES OF INFORMATION
LEAD DISTANCE REQUIREMENTS. DRIVERS INFORMATION
WAS ESTABLISHED FOR (1) APPROACH PATHS, (2)
CHOICE POINTS, (3) TARGET PATHS AND (4) CLOSE SEQUENTIAL
CHOICE POINTS. LITERATURE ON HUMAN CAPABILITIES AND
LIMITATIONS WAS REVIWED TO DEVELOP DISPLAY OF THE ERGS
CONCEPT, INFORMATION REQUIREMENTS, DISPLAY CHARACTERISTICS
AND DESIRABILITY OF A PARTIALLY IMPLEMENTED SYSTEM WAS ALSO
ANALYZED. REPRESENTATIVE COMPLEX ROUTE GUIDANCE PROBLEMS
TOGETHER WITH VARIATIONS IN THE DRIVER INFORMATION
REQUIREMENTS AND DISPLAY CONCEPTS WERE PRESENTED TO DRIVERS.
THE DRIVERS INDICATED: (1) HOW THEY WOULD PERFORM WITH THE
DISPLAYED INFORMATION AND (2) WHICH OF THE DISPLAYED
INFORMATION CONCEPTS THEY PREFERRED. INFORMATION ON DRIVER'S
PREFERENCE FOR IMPLEMENTING THE SYSTEM ON PRIMARY ROADS, IN
CENTRAL BUSINESS DISTRICTS, AT CRITICAL INTERSECTIONS OR IN
SUBURBAN AREAS WAS DETERMINED. /AUTHOR/

          BUREAU OF PUBLIC ROADS /US/
```

Fig. 2. Typical HRIS document record for abstract of published report.

from the state highway departments through the NCHRP and from the Bureau of Public Roads. Work on the system began in April, 1964. The design and development of the Highway Research Information Service (HRIS) were under the direction of Dr. P. E. Irick, HRB Assistant Director for Special Projects. A. B. Mobley is now Manager of the service. An advisory committee, made up of representatives of the potential users of the system and specialists in information retrieval systems, reviewed staff decisions as the system was being developed. On July 1, 1967, after an expenditure for development of 800 thousand dollars, HRIS became operational. Service is available to anyone who needs an up-to-date account of transportation technology. It represents one of the most complete compilations of information on highway-related research available in the United States. It is saving time, money, and duplication of research. And, just as important, the easily accessible storehouse of information is helping practicing engineers and administrators make the best possible use of research findings.

The scope of the information stored in the system is as broad as the problems of planning, building, maintaining, and operating transportation systems. Subjects range from parking regulation to soil stabilization, from aggregates to aesthetics, from hydrology to psychology—anything having to do with highway travel or its interaction with other modes of transportation. Two general categories of documents are stored in the system. One category is made up of summary statements of the facts and objectives of research projects that are in progress, as shown in Fig. 1. The other category includes summaries of published articles or reports on completed research, similar to the typical document record shown in Fig. 2. Some 28 000 summaries of in-progress research and abstracts of reports on completed research are now stored on the computer tapes.

The inputs come from about 2700 sources the world over, including private and governmental research agencies, colleges and universities, and periodicals and technical journals. In terms of geography, the contributors to HRIS are as widespread as the subject areas covered in the system. Sources are located in all 50 states, the District of Columbia, Puerto Rico, and 40 foreign countries.

About one quarter of the present HRIS files are made up of summaries of ongoing research. Each year the Bureau of Public Roads supplies some 1200 summaries of projects in the federally aided research programs of the state highway departments and in the bureau's in-house and contract research programs. About 4000 summaries of foreign research projects have been entered from International Road Federation surveys, and the International Road Research Documentation (IRRD) center is now beginning to add to the coverage of foreign research. Many ongoing research projects are uncovered by HRB staff engineers on their regular visits to over 200 research agencies and universities. Information about others is acquired through exchange agreements with other information services, both foreign and domestic. HRIS has arranged to systematically update all of these ongoing project summaries to reflect changes in status, as well as the frequent changes in the scope and purpose of research projects.

Three fourths of the records now stored in the HRIS files are made up of abstracts of reports on completed research, bibliographies, and other material chosen for its

potential importance to the transportation community. The technical staff of the HRB reviews nearly all American literature oriented toward highways or transportation in general. Over 800 sources are systematically reviewed (magazinca, journals, conference proceedings, etc.). Only about one in six of the articles reviewed is considered of sufficient reference value to be included in the system. After the articles are chosen, the HRIS or HRB library staff prepares abstracts for them.

Abstracts are supplied each month by the Bureau of Public Roads (over 2200 to date) and also periodically by other organizations. The National Asphalt Pavement Association, for example, has provided a number of abstracts, many of which have been included in the system. Still other abstracts are obtained through exchange agreements between the HRIS and other information systems such as the IRRD. The HRIS stores abstracts supplied by these other information services and, in return, provides them with abstracts of HRB publications. In addition, HRIS participates in the IRRD storage and retrieval system for worldwide coverage of published highway research material. The IRRD system operates through centers in France, Germany, and Great Britain. English language publications are the responsibility of the British group, the Road Research Laboratory (RRL), and it is through this group that the HRB exchange is made. RRL has already furnished several thousand abstracts to the HRIS, some of which had been translated from other languages.

Comprehensive coverage of published research reports stored in HRIS dates from 1967. Several thousand pre-1967 references have also been selected for entry (generally in bibliographic form, without abstracts) ; these represent only reports of major and lasting importance that were selected by the HRB staff and committees. About 10 000 nen- references are expected to be added each year. Another 7000 ongoing research reports will be updated every year.

For the automated aspects of the system, HRIS depends on the computer facilities of the National Academy of Sciences. The present machine is a general purpose digital computer (IBM 360), with four tape drives and disk storage. The HRIS uses approximately 3.5 inches of a nine-channel tape per document record.

The system provides three kinds of service. The first involves listing a specific block of references from the system. These lists are published in books or pamphlets. To date, two major publication series have been authorized using this mode. The first is *Highway Research In Progress,* issued annually in January, which covers the ongoing research; the second is *HRIS Abstracts,* published quarterly, each issue of which contains some 600 items recently abstracted from the worldwide technical literature. The second major mode of service is called "current awareness" reporting. Under this mode, users of the system identify their specific interests which may be as broad, for example, as traffic operations and control or as narrow as the movement of water in soils. A record of the interest of each user (called a "user profile") is then placed on tape in the system. At regular intervals all new entries are matched against the user profile tape, and those new items that meet the profile specifications are sent automatically to the user to keep him aware of new developments in his field of interest. The third major mode of output involves a search of the complete file. Here a user simply asks a question of the system, such as, "Provide a listing of all references on the use of electronics in highway traffic operations." The question is referred to an appropriate HRB professional staff man who refines the question (usually in consultation with the person who asked it). If the staff man feels that HRIS is an appropriate source for the answer to the question, he sends it on to the system where a retrieval specification is prepared using weighted terms and groups constrained by AND, OR, or NOT operators. Fig. 3 shows the retrieval specification prepared for the aforementioned question. There the question is batched with as many as 50 other questions. About once a week the questions are matched against the complete HRIS files, and the pertinent material is printed out, shown by the match list in Fig. 4 and the HRIS selection in Fig. 5.

The system design allow users to be highly specific in the type of information they request, thus eliminating document records of marginal interest from the output. For example, a user might place a standing request for all document records of all foreign research in progress that deals with the theory of elasticity applied to pavement design, particularly if field tests are involved, but not including any work by Dr. John Doe. After the request of the user has been matched against the HRIS files, the printout goes back to the appropriate HRB professional staff man. He compares the system output with the original question and discards items that do not appear to be pertinent to the question. Or, on the other hand, the staff man may decide, on the basis of his own knowledge of recent developments, that the system output is skimpy. In this case, he sends a modified, usually broader, request back to the system. The final response from the HRB may include, in addition to the computer printout, documents, reference lists, or other material supplied through its professional and library resources.

The first two years of HRIS operation have been fruitful. There are problems, of course. There are gaps in the information stored on the tape files, types of information users want that have not been included. Occasionally, the time lag in converting a single copy tape record to a great many copies causes difficulty. Reproduction of an issue of *HRIS Abstracts,* for example, may entail producing *5000* copies from one tape record. It now takes about six weeks to get those 5000 copies printed and sent out to subscribers, when a lag of a day or two would be ideal.

Another problem involves cost. An appreciable amount of subsidization is necessary to maintain such a system. As an example, it costs about $20 to develop and enter the

```
09/25/69                    HRIS REQUEST 55 IEEELS 01 /          /

     MR. LYLE SAXTON
     TRAFFIC SYSTEMS DIVISION
     OFFICE OF RESEARCH AND DEVELOPMENT
     BUREAU OF PUBLIC ROADS


MATCH SPECS:21 TERMS IN 08 GROUPS  MIN SCORE 06,MAX SCORE 11
                                                        WT CODE
GP01
        OR  ELECTRONIC CONTROL                          05 1082240
        OR  ELECTRONIC DEVICES                          05 1082388
        OR  ELECTRONIC MEANS                            05 1082402
        OR  ELECTRONIC TRAFFIC DEVICES                  06 1082403
        OR  ELECTRONIC ROADS                            06 1082465
        OR  ELECTRONIC VEHICLE GUIDANCE                 06 1082470
        OR  ELECTRONICS                                 05 1082475
    OR  OR  ELECTRONICS /TRAFFIC/                       05 1082480
GP02
    OR  OR  INTEGRATED CIRCUITS                         05 1127770
GP03
    OR  OR  TRANSISTORS                                 05 1272200
GP04
        OR  VEHICLE DETECTING EQUIPMENT                 01 1282490
        OR  DETECTING DEVICES                           01 1067292
        OR  DETECTION                                   01 1067320
        OR  DETECTORS                                   01 1067370
    AND OR  DETECTORS /TRAFFIC/                         01 1067380
GP05
        OR  COMMUNICATIONS                              01 1045600
    AND OR  COMMUNICATION SYSTEMS                       01 1045630
GP06
        OR  TRAFFIC CONTROL                             01 1269460
    AND OR  TRAFFIC CONTROL SYSTEMS                     01 1269545
GP07
    AND OR  GUIDANCE                                    01 1112640
GP08
    AND OR  HIGHWAYS                                    01 1117615


SELECT SPECS 01 TERMS IN 01 GROUPS,MIN SCORE 01,MAX SCORE 01
                                                        WT CODE
GP01
    OR  OR  O-UNIVERSAL                                 01 000201
```

Fig. 3. Typical HRIS retrieval specification for retrospective file search by computer.

```
09/25/69                    HRIS REQUEST 55 IEEELS 01 /          /

ASSESSION MATCH LIST:

DOCUMENT    TOTAL     GROUP SCORES
            SCORE 01 02 03 04 05 06 07 08

1P11 089913  07   05 00 00 00 01 00 00 01
1P11 202069  06   05 00 00 00 00 00 00 01
2R15 064286  06   05 00 00 00 00 00 00 01
1P21 015232  06   05 00 00 00 00 00 00 01
1P21 015235  06   05 00 00 00 00 00 00 01
2R22 064281  06   05 00 00 00 00 00 00 01
3P22 200660  06   06 00 00 00 00 00 00 00
4C33 126918  06   05 00 00 00 00 00 01 00
2R34 007814  06   05 00 00 00 00 01 00 00
4P34 084157  06   05 00 00 00 00 00 00 01
1P34 204058  06   05 00 00 01 00 00 00 00
5C40 082274  06   05 00 00 01 00 00 00 00
5C51 018327  06   05 00 00 00 00 00 00 01
5C51 018483  06   05 00 00 00 00 01 00 00
4R51 041431  06   05 00 00 01 00 00 00 00
3C51 090670  07   06 00 00 00 00 00 00 01
1P52 016651  06   05 00 00 00 00 00 00 01
3C52 021342  06   05 00 00 01 00 00 00 00
4C52 035356  07   06 00 00 00 00 00 00 01
2P52 201789  06   06 00 00 00 00 00 00 00
1P52 205535  06   05 00 00 00 00 00 01 00
1C53 020337  06   05 00 00 01 00 00 00 00
1C53 020466  06   05 00 00 01 00 00 00 00
1C53 021163  06   06 00 00 00 00 00 00 00
3C53 021720  06   05 00 00 00 00 00 01 00
2R53 060313  08   05 00 00 00 01 01 01 00
2R53 062954  06   05 00 00 00 00 00 00 01
2R53 080968  06   05 00 00 00 00 01 00 00
 |    |     |    |  |  |  |  |  |  |  |
 |    |     |    |  |  |  |  |  |  |  |
 |    |     |    |  |  |  |  |  |  |  |
 |    |     |    |  |  |  |  |  |  |  |
 |    |     |    |  |  |  |  |  |  |  |
1P53 205538  06   05 00 00 00 00 00 01 00
2R54 060167  07   06 00 00 01 00 00 00 00
2R55 060505  07   06 00 05 01 00 00 00 00
2R55 062966  06   05 00 00 01 00 00 00 00
2R55 064262  06   05 00 00 01 00 00 00 00
4C55 126366  06   06 00 00 00 00 00 00 00
3P70 201196  06   05 00 00 00 00 00 00 01
4R84 041428  06   05 00 00 01 00 00 00 00
1P84 201791  06   06 00 00 00 00 00 00 00
3P90 084377  06   05 00 00 00 00 01 00 00

00059 MATCHES

      PRINT CARD TYPES: A3,15,22,25,26,43,44,45,47,70,82,84,74
      PRINT SPECIAL INDEXES:

0058 SELECTIONS
```

Fig. 4. Typical accession match list.

```
09/25/69                    HRIS REQUEST 55 IEEELS 01 /          /

HIGHWAY RESEARCH INFORMATION SERVICE /HRIS/ DOCUMENT RECORDS
PERTAINING TO THE STATE OF THE ART OF HIGHWAY ELECTRONICS.


09/25/69          HRIS SELECTIONS       55 IEEELS 01


1P11 089913

ELECTRONIC REQUIREMENTS IN HIGHWAY SYSTEMS

CLEVEN GW

AM ASSOC STATE HIGHWAY OFFICIALS            MAY68
PP 1-7

  AN ENVIRONMENT OF OPTIMUM HIGHWAY SAFETY CAN BE OBTAINED
WHEN THE RELATED COMPONENTS--HIGHWAYS, VEHICLES, DRIVERS AND
CONTROLS, ARE OPERATED AS A INTEGRAL SYSTEM. THE
INTEGRATION OF THIS SYSTEM CAN BE ACCOMPLISHED BY AN INTENSE
APPLICATION OF TRAFFIC ENGINEERING COUPLED WITH THE GREATLY
INCREASED USE OF ELECTRONICS ENGINEERING. THE EFFORT FOR THE
IMPLEMENTATION OF ELECTRONIC TECHNIQUES FALLS INTO TWO
CATEGORIES: (1) THOSE OF DIRECT APPLICATION TO SPECIFIC
REQUIREMENTS, AND (2) THOSE OF THE NATURE OF COMMUNICATIONS
LINKS BECOME THE INTEGRATING INTERCONNECTIONS FOR ALL LOGIC
MODULES. AN ELECTRONIC STUDY GROUP IS STUDYING THE SYSTEM
COMPATIBILITY. THE STUDY HAS BEEN DELINEATED INTO FOUR
CATEGORIES: ADVISORY, CONTROL, SURVEILLANCE, AND AREAL
INFORMATION AND CONTROL. NEEDS OF EACH CATEGORY ARE
DISCUSSED. THE IMPLEMENTATION OF THESE SUGGESTIONS IS
DEPENDENT UPON MANY VARIABLES FOR DECISION-MAKING. THESE
VARIABLES ARE DISCUSSED, WITH THE RECOMMENDATION THAT THE
EFFORT BE GUIDED BY PROPER SYSTEMS ANALYSIS.
```

Fig. 5. Typical retrieved HRIS selection.

bibliographic data, index terms, and abstract for a single published research paper. If users were charged a full share of the cost of keeping the system up to date, as well as the direct cost of output service, the total cost would be so high that it would preclude the use of it by engineers in public service, students, and others. Only well-endowed research agencies, consultants involved in large projects, or the like would use the system. Supporters of the HRB recognize this problem and have agreed to provide funds to keep the system viable in the interest of overall improvement of highway transportation. Users will, however, have to reimburse the system for the cost of output services provided. This is not unlike the situation where a city provides the funds for a multimillion-dollar museum that anyone can visit for 50 cents.

Future Information Systems

Because of its experience and success in information handling, the HRB has been asked to broaden its activities in this area to include comprehensive coverage of research information relating to the other modes of transportation. In cooperation with the Maritime Information Committee, NRC, it is now under contract to the Maritime Administration to develop a Maritime Research Information Service (MRIS) which will cover ongoing research and published reports in the maritime field. A pilot system covering all ongoing research (in all modes) supported by the Department of Transportation (DOT) and also certain foreign nonhighway research is being developed for DOT. It is called the Transportation Research Information Service (TRIS).

The science of information is progressing very rapidly. The HRB will keep abreast of new developments in technology; therefore, HRIS, MRIS, and TRIS necessarily will be under a continuing state of review and will be modified from time to time to keep up with new developments as soon as they are proven effective. The HRB is making every effort to be highly sensitive to the needs and wishes of the users of the systems.

Users frequently need very rapid service. The new HRB systems now under development provide for automatic indexing and for the conversational mode of retrieval by which the user may query the storage files directly from a keyboard with cathode ray tube display. This provides almost instant response.

If the HRB were necessary and important nearly 50 years ago when it was established, then it has become indispensable today. Its traditional role has been modified to meet the press of transportation problems. The component activities of the Board, including the information storage and retrieval systems, are the most efficient and appropriate means now known to meet the challenges of today and tomorrow. Through the continuing and dedicated efforts of those who are associated with the board, its staff, its department and committee members, its supporting organizations and individual members, and its counterpart organizations around the globe, the search will go on to find new ways and means to solve the complex transportation problems of our complex world.

Electromagnetic Loop Vehicle Detectors

ROBERT L. ANDERSON, MEMBER, IEEE

Abstract—Three different electromagnetic loop vehicle detector designs are described: self-tuning, bridge balance, and phase-shift. Principles of operation, design limitations, and design tradeoffs for each method are presented in detail. The characteristics of the lead-in wire used are shown to be the primary limitation in loop detector performance and stability. Characteristics of commercially available wire used in present-day loop detector installations are discussed. Design equations and graphs illustrate the tradeoff considerations in the determination of optimum loop configuration and inductance.

WITH THE ADVENT of electronics to aid in solving today's growing problem of traffic control, the demands for automatic vehicle detection have increased. Traffic-actuated intersection controllers utilize input data regarding traffic demands to properly apportion the available green time between opposing traffic movements. More advanced electronic controllers utilize measurements of the traffic volume and density characteristics to further refine the assignment of green time among the various traffic movements. The research and investigation of traffic patterns involves the sensing and recording of large amounts of data, including vehicle count, speed, density, and volume. Large arterial traffic systems which are operated by a centralized computer rely on data inputs from sensors located within the controlled area as a basis for logical decisions concerning the control of the traffic signals. The electronic equipment used in each of the preceding applications shares at least one common requirement: the need for electronic input data to indicate the presence of vehicular traffic on the roadway. The electromagnetic loop detector is presently one of the most widely accepted methods of sensing vehicular traffic and converting the sensed information into an electrical signal usable by other traffic monitoring and control equipment.

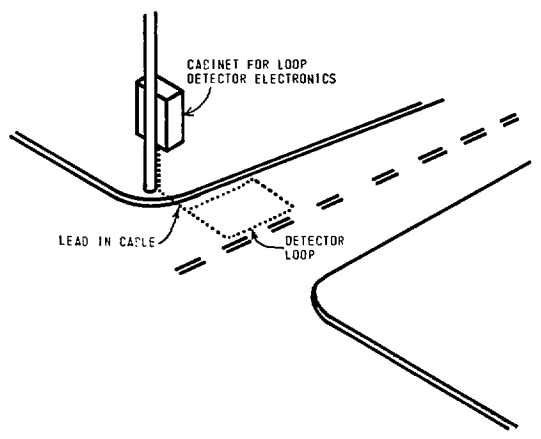

Fig. 1. Typical loop detector installation.

Fig. 1 depicts a typical loop detector installation. The detection loop is located directly in the roadway and occupies a major portion of the width of the lane (or lanes) in which traffic detection is required. The loop is installed in the pavement by first making a series of saw-cuts in the pavement, inserting the proper numbers of turns of

Manuscript received July 24, 1969
The author was with Crouse-Hinds Company, Syracuse, N. Y. 13208. He is now with Applied Dynamics, Ann Arbor, Mich.

wire, and refilling the slot with an epoxy sealer. Loops are typically deployed in a rectangular configuration, using either no. 14 or 16 wire. Depending on the size of the loop, the number of turns varies between one and four, and the loop inductance ranges between 50 and 300 uH. The electronics associated with the loop, including power supplies and output circuitry, are generally installed in a controller cabinet, together with other intersection-controller equipment. The electronics can be located at distances up to 750 feet away from the loop.

The loop detector has several operational features which make it well suited to traffic-detection applications. First, the detection zone is well defined by the dimensions of the pavement loop, and can be made as large as required, by connecting a number of individual loops together. Second. detection is not affected by ambient light levels, heavy rain or fog, or wind and ambient noise levels. Also, these detectors can provide either a permanent presence indication, which is a continuous signal whenever any vehicle is in the detection zone, or pulse presence information, which is a signal whenever a vehicle enters the detection zone. Finally, as a factor which is important in city modernization and beautification planning. the detection element of the loop detector is concealed in the pavement. Loop detectors, as opposed to optical, sonic, or radar detectors, do not require the use of either supporting poles or crossarms to mount the sensor element.

While the design of electronics may follow any one of several design philosophies, which will be discussed later, all of these designs operate on the following principle. If the loop is energized with a high-frequency ac current, the presence of a vehicle (or any other electrically conductive object) in the electromagnetic field of the loop will cause a net decrease in the self-inductance of the loop due to the eddy currents induced into the frame of the vehicle. The amount of change in self-inductance is difficult to calculate due to both the complex geometry and the unknown factors concerning a given vehicle body. Test measurements indicate inductance changes upward to 5 percent, depending on both the size and type of the vehicle and also the distance between the loop and the bottom of the chassis of the vehicle. The length and charnctrristics of the loop lead-in cable, as will be discussed later, are the primary limitations on the sensitivity of this type of detector. By combining several smaller loops in series--parallel configurations, it is possible to cover a wide detection zone using a single-loop electronics package. The use of multiple loops, however, creates a situation where one vehicle parked over one of the loops will block detection of vehicles crossing the other loops. This problem is circumvented by using pulse presence rather than permanent presence circuitry in the detector electronics. The pulse presence circuitry produces an output pulse of adjustable duration whenever a vehicle enters the detection zone. Another vehicle will not be detected or counted until the pulse generated by the previous vehicle has terminated.

Several loop detector concepts have been designed around the principle of a change in inductance of the detection loop. One type is a self-tuning detector, where the loop is part of a parallel tuned tank circuit, and where a feedback loop is used to adjust the oscillator frequency to keep the detector automatically tuned to the same amplitude point on the resonance curve. A second design is a bridge-balance detector, which, as the name implies, uses the loop as one leg of a balanced-bridge circuit. A vehicle crossing the loop unbalances the bridge circuit; this produces a change in the signal amplitude that, is used to indicate vehicle presence. The third type is the phase-shift detector, which is similar to the self-tuning type and uses the pavement loop as part of a parallel tuned circuit. In this detector, however, the change in the relative phase shift in the tank circuit, which is produced by a vehicle changing the loop inductance, is used as an indication of vehicle presence. These various designs will now be described in detail.

Self-Tuning Detector

This type of detector utilizes both a pavement loop as part of a parallel resonant tank circuit and also a closed loop feedback circuit, which automatically adjusts a voltage-tuned oscillator to a predetermined frequency relative to the resonant frequency of the tank. A change in the loop inductance shifts the resonant frequency of the tank, which results in a change in the feedback voltage. The latter is used to provide an indication of vehicle presence through the relay and relay-driver circuits. Fig. 2 shows this type of self-tuning loop detector.

The ac voltage versus frequency response of the tank is the familiar resonance curve associated with a parallel resonant tuned circuit. The frequency at which maximum voltage occurs is the resonant frequency of the combination of the loop inductance plus the lead-in inductance, in parallel with the fixed capacitance of the lead-in and fixed capacitors in the detector package. The ac voltage across the tank circuit is rectified, filtered, and fed to one input of dc differential amplifier. A reference voltage is applied to the other input of the amplifier and used to establish the detector operating point on the resonance curve. This voltage is amplified, passed through a time-delay network, and used to control the frequency of the oscillator. The polarity of feedback is such that, when the loop inductance changes, the oscillator frequency will be driven in the direction that will maintain the same operating point on the resonance curve (the same amplitude tank voltage).

Referring to Fig. 3, with no vehicle over the loop the detector will self-tune itself to point *A* on the low-frequency side of the resonance peak. A vehicle over the loop will decrease the self-inductance of the loop, increasing the resonant frequency from f_1 to f_2. This shift causes an instantaneous decrease in the tank voltage, causing a step increase in the output of the dc amplifier. This voltage is delayed by the time-constant circuit before it is applied to the voltage-controlled oscillator.

The difference between the input and output signal of the time-delay circuit is derived by the comparator

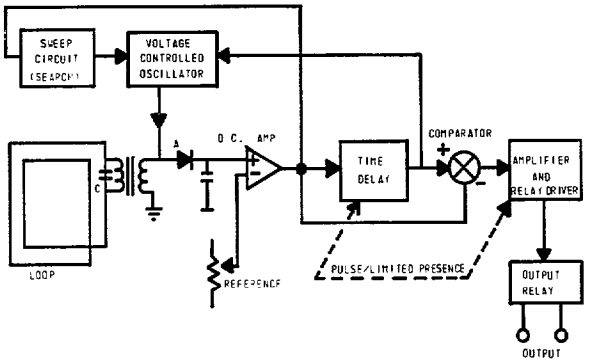

Fig. 2. Self-tuning loop detector.

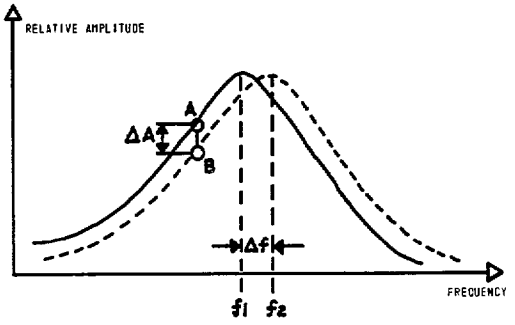

Fig. 3. Self-tuning loop operation. Solid line—resonant curve of tank circuit with no car on the loop; dotted line—resonant curve of tank circuit with car on loop. A—operating point with no car on the loop; B—operating point with car on loop; ΔA—the drop in relative amplitude; ΔF—the shift in resonance frequency.

circuit and is used as a pulse presence signal. The difference between the input and the output signal of the delay circuit is maximum at the instant a vehicle enters the loop, and this difference will gradually reduce to zero if the vehicle remains on the loop. The rate at which the voltage equalizes depends on the time constant of the delay circuit and the loop gain of the feedback circuit.

By varying the time constant of the delay circuit, the pulse presence time can be altered. Typical time constants used in present-day self-tuning loop detectors are adjustable between 10^5 and 5×10^4 seconds. The loop gain of the feedback loop reduces the pulse presence time. Pulse presence times of 10 minutes and 1.2 seconds correspond approximately to delay-circuit time constants of 10^5 and 5×10^3 seconds, respectively.

One of the chief advantages of this concept is that it completely eliminates the need for manual adjustment or setup tuning procedures. Upon application of power, special circuitry is used to tune the detector to the proper operating point. A saw-tooth voltage is applied to the voltage-controlled oscillator which causes it to sweep upward in frequency, starting at a frequency considerably lower than the resonant frequency of the tank circuit. As the frequency of the oscillator increases, the tank voltage will increase to the point where the tank voltage equals the reference voltage. At this point, the sweep oscillator is disconnected, and the feedback loop keeps the oscillator locked in on a specific point of the tank circuit resonance curve.

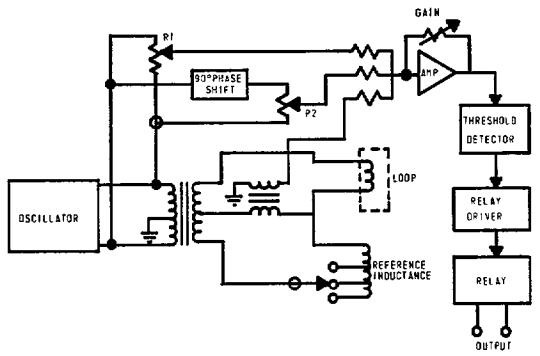

Fig. 4. Bridge-balance loop detector.

In designing a detector of this type, the Q of the tank circuit must be kept sufficiently low, so that the combination of the lead-in impedance variations plus the maximum change in loop inductance expected due to the presence of a vehicle, does not cause the operating point to be forced over the resonant peak. This would result in positive feedback, thereby forcing the detector circuitry into saturation.

Bridge-Balance Loop Detector

Another design of the loop detector that has found acceptance in traffic-control applications is the bridge-balance technique. This approach, as illustrated in Fig. 4, employs the inductance of the loop mounted in the pavement as one leg in a bridge circuit. The other leg of the bridge is the fixed inductor having approximately the same inductance and Q as the pavement loop.

In some models the reference inductance may contain a number of taps, and an associated multiposition switch serves as a course tuning control. The unbalanced voltage, developed as a vehicle drives over the loop, is fed to the input of a high-gain ac amplifier. Two other signals which serve as fine balance voltages are also fed into this amplifier. One of the two reference voltages used to develop the balancing signals is shifted in phase by 90°. Thus the two balance controls R_1 and R_2 can be used to balance out both small resistive and reactive differences between the loop and the reference inductance. In operation, the output of the amplifier is nulled by a combination of switching in the proper reference inductance and adjusting R_1 and R_2. The gain of the amplifier is then adjusted so that the passage of a vehicle causes an amplifier output sufficient to activate the level detector, which in turn energizes the relay driver and the relay.

The main advantage of this type of detector is that the balance of the bridge is not severely affected by the oscillator frequency, since the impedance of each leg of the bridge is affected equally by a frequency change. Hence the stability of the oscillator is not a prime consideration, and a good quality design multivibrator design can be substituted for the crystal oscillator circuit. A second advantage is that the amplifier used can be ac coupled, eliminating the complex drift problems and expense associated with dc

amplification. The main limitation and drawback to this approach is the problem of maintaining a balance in the bridge due to the inability of the reference inductance to track the impedance variations in the pavement-mounted loop due to temperature and humidity changes.

As will be discussed, the loop lead-in has a fixed amount of both distributed inductance and capacitance, which is subject to variation due to changes in the amount of moisture surrounding the lead-in, lead-in placement, and temperature. Temperature, of course, also affects the dc resistance of the lead-in wire and the loop, which will tend to unbalance the bridge circuit.

Phase-Shift Concept

Among the loop vehicle detectors commercially available today, the phase-shift technique is the most widely used. Although the detailed circuit design varies from manufacturer to manufacturer, all phase-shift loop detectors follow the same design configuration, as illustrated in Fig. 5.

The loop is energized from an oscillator circuit. For reasons of stability, this oscillator is generally crystal controlled. Typical operating frequencies vary between 85 and 115 kHz. The loop is tuned to resonance with respect to the oscillator operating frequency by a variable tuning capacitor connected in parallel with the loop. This variable capacitor generally consists of a bank of fixed capacitors connected to a set of selector switches, which in most cases are located within the detector itself, so that actually the inductive portion of the tuned circuit includes the self-inductance of the lead-in.

The phase of the voltage in the loop tank circuit is compared to a reference signal derived directly from the oscillator. Thus when a vehicle moves within the field of the loop, the tuned circuit becomes detuned, and the resulting phase shift will produce a change in output from the phase-detector circuit. This output is amplified by a variable-gain dc amplifier. This signal is then fed into an ac coupled pulse presence circuit. In a number of phase-shift loop detectors available today, the pulse presence circuitry can be operated in various modes which are selectible by means of a front panel switch. These modes include a pulse presence mode, a number of limited presence modes, and an infinite presence mode. In the pulse presence mode the circuitry functions as a one-shot multivibrator and generates a short pulse ($\frac{1}{2}$–1 second) whenever a vehicle moves into the detection area and causes a sharp positive increase in the dc amplifier output. This output pulse drives the relay driver and the relay contacts close for approximately the same length of time. The limited presence modes operate essentially the same as the pulse presence circuitry, except that the time-out intervals are longer. Typical interval lengths are 5 minutes for the short mode, 10 minutes for the medium mode, and 40 minutes for the long mode.

In an infinite presence mode the pulse presence circuitry functions as a memory circuit, which latches whenever a vehicle enters the loop and remains set until the vehicle leaves. Thus the detector will produce a continuous

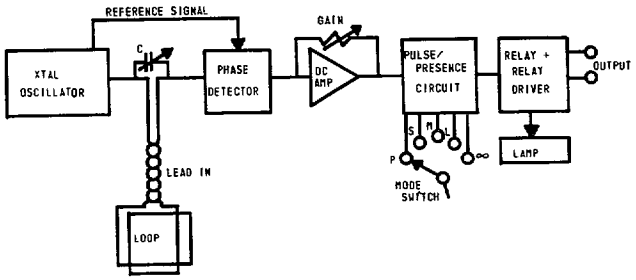

Fig. 5. Phase-shift loop detector.

output whenever there is at least one vehicle in the detection area.

An alternate design approach, in lieu of ac coupled presence circuitry, would be to use a level detector dc coupled to the output of the amplifier. The output of the level detector would be used to indicate the presence of a vehicle whenever the vehicle changes the loop inductance by an amount that causes the output of the dc amplifier to increase beyond a preset level.

This circuitry, however, could saturate after detecting one vehicle and could not detect or count the presence of a second vehicle until the first had left the detection zone.

The primary reason that ac coupled presence circuitry is generally used in phase-shift-type detectors is the requirement for detecting more than one vehicle in the detection area when large or multiple loops are used. The second important reason for using ac coupled output circuitry is that it makes the detector insensitive to slow rates of change of the lead-in and loop characteristics, within the saturation limits of the dc amplifier.

Phase-Detector Design

A key element in the design of a stable high-performance phase-shift loop detector is a stable phase detector with a highly linear phase-shift versus output voltage characteristic. If the phase detector is not linear, the sensitivity of the detector electronics will depend on the selection of the initial tuning point. With a nonlinear phase detector it becomes possible to accidentally restrict the dynamic range of the detector by unknowingly selecting an initial tuning point which falls on a low-gain portion of the phase-detector characteristic curve, and to compensate by using a higher amplifier gain than is normally required. As the loop tank circuit drifts, or as a large number of cars enter the detection area (if a large loop is used), the phase detector may shift into a higher gain region. The amplifier will saturate more quickly than if the phase detector were linear and a lower amplifier gain were used.

Most phase-shift detectors in use today, including the Crouse-Hinds LPDP-1, utilize a two-transistor phase detector of the type shown in Fig. 6. This circuit operates basically as a NAND gate. The voltage waveform that appears on the collectors of the transistor is a square wave. Its duty cycle is proportional to the amount of phase shift between the input and the reference signals.

The dc integrator circuit, consisting of R_f and C_f, filters this square wave into a smooth dc voltage. When the

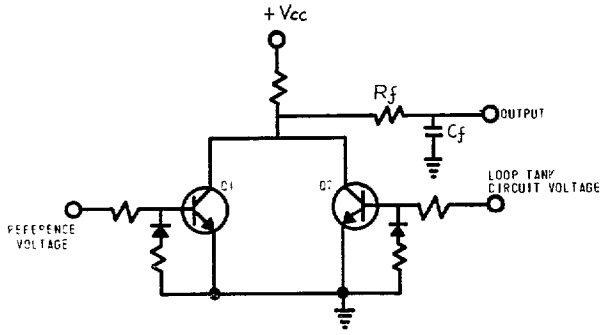

Fig. 6. Phase-detector circuit.

two input signals are exactly in phase, the detector produces a maximum output voltage equal to one-half of VC_T. Ideally, the output voltage decreases linearly to zero when the phase is shifted either forward or backward toward 180°.

Optimum performance and linearity are achieved if the phase-detector output is independent of input waveforms or amplitude, and if the phase detector turnon–turnoff times are not significantly affected by variations in transistor gain.

In some designs involving pulse presence circuitry, it is required that the presence of a vehicle always produce a positive going voltage. Greatest sensitivity occurs, however, at the resonance peak where loop voltages are highest, and where the phase shift reverses from leading to lagging. Therefore, in some designs a phase-shift network is inserted between the oscillator and the phase-detector reference input to shift the characteristic of the detector output. Thus the detector's output-voltage change, in response to a vehicle entering the loop, is always in the same direction.

Lead-in Considerations

As previously mentioned, the lead-in cable forms a portion of the total loop impedance sensed by the detector. Because of this, the detector cannot distinguish between variations of the cable characteristics due to changes in temperature and the presence of moisture, and changes in loop inductance due to the presence of a vehicle, except that the changes due to cable variations are considerably slower than those due to a vehicle.

The slower changes in impedance due to cable parameters can be filtered out by use of ac coupled detector circuitry. However, there still remains a limited range over which drift could be tolerated due to saturation of the direct coupled elements of the circuitry. Thus the variation in characteristics of the lead-in represent a basic limitation on the sensitivity of this type of detector.

The following discussion is an analysis of the factors involved in the choice of an optimum value of loop inductance for a phase-shift-type detector to maximize detection sensitivity and minimize the effects due to variations in lead-in characteristics.

Fig. 7 is an electrical representation of the oscillator, lead-in, and loop portion of the detector circuitry. Most phase-shift detector circuits utilize a triple-winding

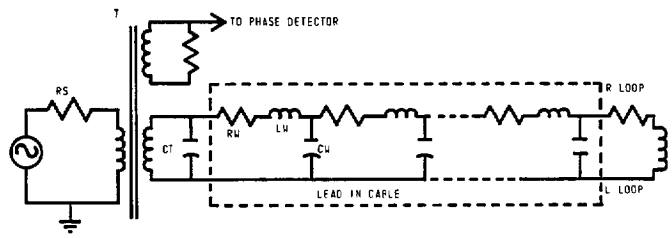

Fig. 7. Equivalent circuit of loop tank circuit including lead-in cable and oscillator.

transformer to couple the oscillator to the loop tank circuit. The phase difference between the oscillator and tank circuit currents is detected by the third winding and fed to one input of the phase-detector circuit. As can be seen, the detector tank circuit consists of more than the self-inductance of the loop and the detector-tuning capacitor.

The self-inductance L_w, distributed capacity C_w, and resistance R_w, of the lead-in wire, plus the resistance of the loop itself R_L are also involved. An exact analysis of this equivalent circuit is complex. However, laboratory tests backed by computer analysis work have indicated that a simplified model, shown in Fig. 8, is accurate enough to gain insight into the tradeoffs involved in loop detector design.

The voltage across the tank circuit (across C_T) is given by

$$VC_{T(\omega)} = M_{AG}\left[\frac{(R/R_sLC + 1/R_sC)j\omega}{(j\omega)^2 + (R/L + 1/R_sC)j\omega + (R_s + R)/R_sLC}\right] \tag{1}$$

where

$$R = R_w + R_L$$
$$C = C_T + C_w$$
$$L = L_L + L_w.$$

Since circuit $Q = \frac{1}{2}\zeta$, circuit damping ζ is expressed by

$$\zeta = (1/2\omega)(R/L + 1/R_sC). \tag{2}$$

The highest loop sensitivity (the greatest amount of phase shift for a fixed change in loop inductance) occurs when $R/L + 1/R_sC$ is minimum. There is, therefore, an optimum L/C ratio for any given source impedance R_s and total loop resistance R_1 that maximizes sensitivity.

Differentiating (2) and solving for minimum damping yields

$$L_w = (1/2\pi f)(R \cdot R_s)^{1/2}. \tag{3}$$

If this were the only factor involved in the design of the loop tank circuit, (3) would specify the optimum value of loop inductance for greatest sensitivity. However, there are two other practical considerations that enter into the optimum choice of an L/C ratio used in the loop tank circuit. One of these factors is the fact that a portion of loop tank circuit is contained in the lead-in. If half the tank inductance is in the lead-in, the net sensitivity decreases by 50 percent because only half of the loop circuit inductance is affected by the presence of a vehicle.

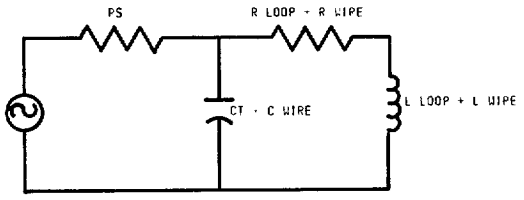

Fig. 8. Simplified equivalent circuit of loop tank circuit.

The amount of self-inductance in commercially available lead-in cable depends primarily on both the wire size and the distance between the conductors. The closer the conductor spacing, the lower the inductance. The amount of inductance is not significantly affected by humidity; however, location and installation of the cable can significantly affect the amount of self-inductance. The self-inductance of commercially available lead-in cable ranges between 10 and 20 μH per 100 feet of cable length.

The other consideration is the amount of distributed capacitance in the lead-in cable, and the variation of this capacity with temperature and humidity.

The amount of fixed distributed capacitance in commercially available lead-in cable ranges between 700 and 2000 pF per 100 feet of cable length. Laboratory tests indicate that this distributed capacity can vary as much as ± 33 percent due to the presence of moisture.

Because a percentage of the total tank circuit inductance is in the lead-in wire, the determination of optimum value of loop inductance involves a tradeoff between obtaining the highest Q possible and getting the largest percentage of total tank inductance into the loop itself. The circuit sensitivity, (i.e., the amount of phase shift produced for a given amount of change in loop inductance) is directly proportional to the ratio of the loop inductance to the total tank circuit inductance. Thus the total circuit sensitivity, S_T, which also is dependent upon circuit Q, as previously described, can be expressed as

$$S_T = \frac{2\omega}{R/(L_w + L_1) + \omega(L_w + L_1)/R_s} \frac{L_L}{L_w + L_1}. \quad (4)$$

Differentiating this expression with respect to L_w, and solving for the maximum value of $\Delta S_T/\Delta L_1$ yields

$$L_{\text{opt}} = [(R \cdot R_s/\omega^2)^2 + (L_w)^2]^{1/2}. \quad (5)$$

This formula indicates that, due to the inductance of the lead-in cable, the optimum value of loop inductance will always be greater than the value predicted by (3). The amount of sensitivity lost by using a value of inductance higher than that which produces the highest Q circuit is more than counterbalanced by making the loop inductance a greater percentage of the total tank circuit inductance.

The situation becomes even more complex, however, when the effects of capacitance variations in the lead-in cable are factored in. For greatest detector sensitivity it is desirable to use a value of loop inductance consistent with (5). On the other hand, because of the capacitance variations of the lead-in cable, a low L/C ratio is desirable. The amount of capacitance in the circuit will then be as high as possible, thereby making the amount of capacity in the cable as small a fraction of the total tank capacity as possible.

A digital computer was used to generate plots of detector sensitivity to changes in loop inductance and lead-in capacitance versus loop inductance. The distributed capacity and inductance of the lead-in wire were represented in the model by a 5-section L/C lumped constant network. Three separate cases were modeled, corresponding to three separate lengths of lead-in cable; these were 100, 250, and 750 feet. The computer was programmed to solve for circuit phase-shift sensitivities for several specific values of loop inductance. For each value of loop inductance the value of capacitance required to tune the tank circuit to resonance at 100 kHz was computed and used in the simulation. The computer then solved for sensitivity in terms of the amount of phase shift for a 1 percent change in loop inductance ($\Delta\phi/\Delta L$), the amount of phase shift for a 33 percent change of lead-in capacitance ($\Delta\phi/\Delta C$), and the ratio of these sensitivities ($\Delta L/\Delta C$).

For small variations in L_L or C_w the amount of phase shift is linearly proportional to the amount of component variation and, therefore, the ratio $\Delta L_L/\Delta C_w$ is a good indication of the optimum choice of loop inductance.

Circuit values used in these simulations were as follows:

$R_s = 500$ ohms
$R = 1$ ohm
$L_w = 20 \times 10^{-6}$ henry per 100 feet
$C_w = 12 \times 10^{-12}$ farad per foot.

Thus according to (5), values of loop inductance for optimum sensitivity for 100-, 250-, and 750-foot lead-in cables are 40.5, 62, and 157 μH, respectively. Figs. 9 and 10 are graphs that were plotted from the results of the computer simulation. Fig. 9 is a plot of the tank circuit phase shift for a 1 percent change in loop inductance versus the percentage of optimum loop inductance as defined by (5).

This graph indicates that the value of loop inductance that will yield maximum sensitivity as calculated from (5) is nearly correct in the case of the 100- and 250-foot lead-in wire. It will be noted that the value of inductance for which maximum sensitivity occurs with the 750-foot lead-in is approximately 90 percent of the optimum value predicted by (5). This difference is due to the differences between using a distributed L/C lumped constant network in the simulation and using the simplified model which derived (5). However, because of the relatively low Q of the tank circuit, the change in sensitivity versus inductance curve, particularly in the case of the 750-foot lead-in, is reasonably flat in the area of 100-percent optimum loop inductance. Consequently, the difference in gain at the actual optimum inductance and the predicted value is only 8 percent. Another important consideration in selecting the optimum value of loop inductance is the effect of the variation in tuning due to the variation in lead-in distribution capacitance.

The factor that becomes important when lead-in capacitance variation is considered is not the maximum

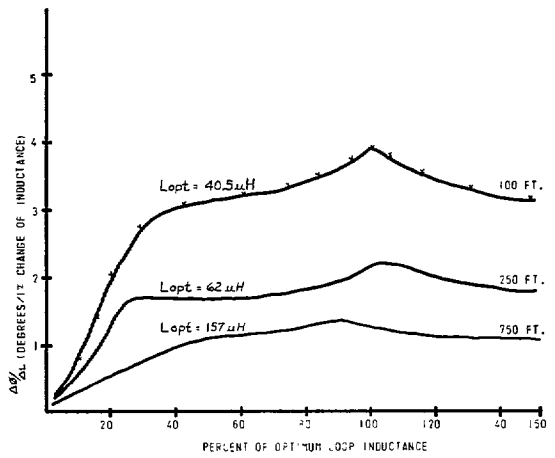

Fig. 9. $\Delta\phi/\Delta L$ sensitivity versus percent optimum loop inductance for various lead-in lengths. $f = 100$ kHz.

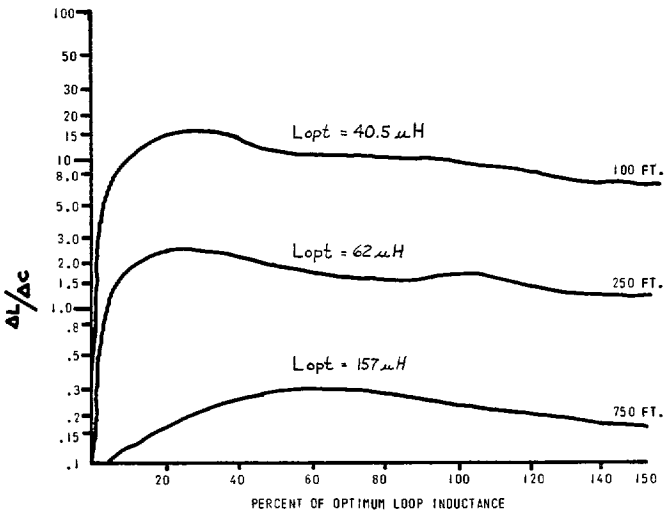

Fig. 10. $\Delta L/\Delta C$ sensitivity versus percent optimum loop inductance for various lead-in lengths. $f = 100$ kHz, $\Delta C = 33$ percent.

change in phase for a given percentage change of loop inductance but rather the ratio of the inductance phase shift versus the capacitance phase shift. If detector amplifier drift is not a factor, then the amplifier gain can be increased to compensate for any loss in inductance phase-shift sensitivity loss, to achieve a higher $\Delta L_L/\Delta C_w$ ratio.

Fig. 10 is a plot obtained from the computer simulation of the detector tank and lead-in circuits. As can be seen, the highest ratio of inductive to capacitive phase-shift sensitivity occurs between 20 and 60 percent of the optimum value of loop inductance, depending on the length and characteristics of the cable. Location of these peaks are dependent on the amount of capacitance in the cable and the ratio of the capacitance variation to the total tank capacitance. If the expected capacitance variation is different from 33 percent, then the shape of the curves in Fig. 10 would be different. A smaller change in cable capacitance would shift the peak of the curves to the right toward a 100-percent optimum loop inductance. Obviously, if the capacitance variation were zero, then the results shown in Fig. 9 could be used to determine the best value of loop inductance. Admittedly, these results are for a specific case. However, they do indicate a general trend, that as the amount of the cable capacitance variation increases, the optimum value of loop inductance decreases.

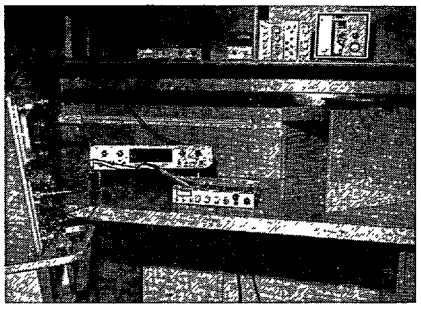

Fig. 11. Vehicle simulator being used to check the sensitivity of a phase-shift loop detector.

Loop Simulator

One important performance parameter of any vehicle detection system is its sensitivity, i.e., the ability to detect a vehicle of prescribed minimum size and/or maximum chassis height above the pavement. One method of evaluating detector sensitivity would be through the use of an actual installation which involves a pavement-mounted loop connected to the detector under test and actual test vehicles. This approach, while it does test the detector circuitry under the most realistic circumstances, is understandably difficult and expensive to practice. Another problem is that it is difficult to extract any quantitative data or repeatable results from this technique.

One method that has been used successfully to simulate the loop vehicle interface in the laboratory is to use the simulator illustrated in Fig. 11. This simulator, shown to the right of the loop detector, consists basically of a wooden frame on top of which is mounted an air core coil. This coil consists of 12 turns of no. 14 AGW wire, and its inductance is 79 μH. The wooden frame consists of several slots, which are spaced $\frac{1}{2}$ inch apart and perpendicular to the axis of the coil. The entrance of a vehicle into the loop is simulated by inserting a $\frac{1}{64}$-inch steel plate into the frame. The spacing of the metal plate and the coil has been correlated with the presence of a vehicle over an actual loop for a given percentage change in loop inductance; a standard American passenger car over a 4- by 6-foot loop corresponds to a 2.5-inch spacing between the plate and the test coil. The loop simulator has proven to be a useful tool in making convenient comparative measurements between various detector circuit designs.

Summary

Electromagnetic loop detectors have a number of operational advantages that make them ideally suited for application in today's electronic traffic control systems. Among these advantages are both a well-defined detection zone and also a relatively low-cost and straightforward electronics. A number of loop detector designs have been

developed. However, they all operate on the common principle of a change of inductance of the pavement loop by the presence of a vehicle. Designs include self-tuning, bridge balance and phase shift.

The parameters of the lead-in cable, in particular the variation of self-capacitance and inductance of the cable, is the primary limitation to the sensitivity of these types of detectors. For any given cable, with known self-inductance and variations in distributed capacitance, there is an optimum value of loop inductance which maximizes detector sensitivity to vehicles and, at the same time, minimizes the drift effects of changes in lead-in capacitance.

ACKNOWLEDGMENT

The author wishes to thank A. G. Manke, M. G. Davis, and R. F. Curtis for their helpful suggestions and comments.

REFERENCES

[1] W. W. Huppert, "Familiarity with loop detectors will aid application installation," *Traffic Engrg.*, August 1965.
[2] F. Langford-Smith, *Radiotron Designers Handbook*. Harrison, N. J.: Radio Corporation of America, 1952.
[3] W. Schempers, Jr., "Loop detectors," *Traffic* Engrg. September 1966.
[4] "Design consideration for vehicle detector loops," Link Precision Systems, Inc., 1968.
[5] "Operation and maintenance manual-loop vehicle detector AT-100," Link Precision Systems, Inc., 1968.

Radar, Acoustic, and Magnetic Vehicle Detectors

JOHN I,. BARKER, SENIOR MEMBER, IEEE

Abstract-Three different physical phenomena are discussed as applied to the detection of roadway vehicular traffic. These detectors are the input data sources for vehicle-actuated traffic signal light control mechanisms, control systems, freeway surveillance, and statistical analysis. Radar detectors using microwave radio frequencies in the 2.5-10 MHz are discussed with regard to operating principles, design consideration, and practical application. Similarly, acoustical detectors operating in the 20-kHz range and low-flux density change magnetic detectors are discussed. A comparative analysis is made of radar, acoustical, and magnetic detectors, as well as mechanical, magnetic, induction, and optical detectors.

I. INTRODUCTION

A. Vehicular Detectors-Radar, Acoustic, and Magnetic

SINCE THE LATE 1920s there has been a continual increase in the need for the automatic detection of vehicular traffic to provide inputs to equipments used to solve statistical and operational traffic problems. Engineers have thoroughly searched a wide range of physical phenomena, from the use of purely mechanical equipment through the more electronically oriented devices using acoustic, radio frequency, optical, and magnetic phenomena. This paper, while primarily restricted to radio-frequency radar. sonic or acoustical, and direct magnetic means for the detection of vehicular traffic, should in no way be considered as a complete coverage of vehicular detectors. Other papers in this special issue will cover other approaches or concepts.

Manuscript received July 16, 1969; revised October 9, 1969.
The author is with the LFE Corporation, Fast Norwalk, Conn. 06856.

One of the prime requisites for a simple form of vehicular detector is that the device does not require cooperative equipment in the vehicle. While equipments which can cooperate between the vehicle and the detector offer extended data-gathering capability, the simpler types of detectors discussed here will continue to be used for at least the next generation since cooperative equipments will have to be phased on a realistic time and economic basis.

A traffic detector, in general, is defined as a device which indicates when a vehicle moves by, or through, a selected point or area. This information is sufficient for the operation of vehicle-actuated traffic-signal-control equipment; such information is also sufficient as an input for the operation of simple count-type data mechanisms for planning purposes, etc. In general, "sensors" may be defined as special detectors which not only note the presence or passage of a vehicle but also provide an indication or measurement of the speed of the vehicle. Some types of sensors lend themselves to direct speed measurement, while others use two detectors longitudinally displaced in the line of travel of the vehicle; i.e., they measure the elapsed travel time between the two displaced units.

An additional requirement of detectors from the traffic engineering standpoint is the determination of the direction in which the vehicle travels over or past the detector. This was of prime importance in the early days of vehicle-actuated traffic signals when streets were narrow and highly crowned, and people rode in the middle of the road whenever possible. Today, directional detection is needed

rather infrequently, except where the direction of traffic is purposely reversed on a roadway in order to optimize the number of travel lanes in accordance with the traffic demand.

B. Environmental and Application Design Criteria

The evolutionary development of detectors for vehicular traffic has grown from the simple pressure contact type (operated by the weight of the vehicle going over some form of treadle in the roadway) through to more sophisticated field-responsive detectors. Development followed the progress of the electronic industry, beginning in the lute 1920s and accelerating at an ever increasing pace during and following World War II. Placing these devices in the relatively hostile environment near or in the roadway, where they were subject to the associated wear, temperature, moisture, and contamination problems, quite naturally slowed the development somewhat'. Each time a new device using a new phenomenon was developed in response to new needs or shortcomings of previous types, the device developed its own set of problems. The early use of vacuum tubes taxed the capabilities of designers to the limit to secure reasonable life expectancy or mean time between failures (MTBF). Later, the transistor challenged the engineer to make this inherently thermally sensitive device into a practical field component'. All the devices covered in this paper have responded to good engineering to produce satisfactory detectors.

All of the detectors to be described in this paper have been developed by manufacturers who supplied equipment to vehicle traffic signal and surveillance customers, such as cities and states. In most cases the specifications, etc., have been developed by the cities and states to meet their particular requirements, and most state highway departments have specifications for these units. Relatively broad specifications can be found in [1], [2]. Most manufacturers have available proposed specifications for each of their units, and specific details can be secured by writing to them.

Common electrical design requirements are essentially tied in with the application environment in which the detectors will be used, and are as follows:

1) operation over the limit of a 100- to 13.5volt variation in the 60-Hz power supply,

2) derating, selection, and judicious use of electrical components to provide a MTBF of four years,

3) derating and circuitry design to allow for operation over temperature extremes from -30 to + 180°F (the high temperature of 180°F is required because of the more than 60° rise in temperature inside the weatherproof housing when mounted in direct sunlight,

4) operation in relative humidities of 0-98 percent,

5) stable operation for power supply interruptions up to 1/2 second and for short overvoltage transients as high as +50 percent over the line voltage (one of the most annoying electrical problems relates to the noise immunity which must be secured with regard to line voltage transients) .

II. Radar Vehicular Detectors

A. Continuous Wave Radar Detectors

1) *Principple of Operation:* The development of microwave radar during World War II made available a practical tool for the detection of vehicular traffic. In its simplest form, microwave energy is broadly beamed on an area of roadway from an overhead antenna, and the reaction of the vehicle on the energy is detected. By direct comparison of the transmitted energy with the reflected energy from a moving vehicle, a Doppler beat note can be detected which in turn can be used to operate an output device. Use of continuous nave (CW) transmission and reliance on the use of a Doppler signal from the return wave eliminates the need for any gating or distance measurement and thereby provides a simple detector which is responsive to vehicles moving through the field

The Doppler beat note for a 2.45-GHz radio frequency (RF) is approximately 7.3 Hz per mile per hour, corresponding to vehicle movement in line with the RF transmission. The configuration of the antenna mounted over the roadway and beamed essentially down on the roadway, either slightly toward oncoming traffic or toward departing traffic, subjects the resultant Doppler to a reduction by the cosine of the angle between the direction of travel of the vehicle and the direction of the propagation of the RF wave. With the speeds V expressed in miles per hour and at 2.45 GHz the formuia for the Doppler beat note F_D is

$$F_D = 7.31V \cos \theta.$$

Under these conditions a vehicle traveling under the antenna will intercept waves such that the cosine of the angle goes through 90°. The resultant' Doppler frequency response in the detector goes through very low values approaching zero, regardless of the speed of the vehicle under the antenna. By limiting the maximum frequency response of the receiver to a very low value on the order of 7 Hz, the unit can be made to respond only when vehicles travel under the antenna.

The antenna assembly conveniently may be a broadside multiple dipole array, designed to provide radiation patterns having from 20° to 60° between half-power points. Thus the antennae can be mounted at a convenient height of 16-20 feet above the roadway and still illuminate from one to three lanes of traffic.

2) *Electrical Design Requirements:* The RF requirements for the transmitter were established in the late 1940s in the 2.45-GHz range. This was selected because the Federal Communications Commission (FCC) had temporarily allocated an industrislkcientific-medical (ISM) band in this region of the spectrum in which broad and relatively simple licensing procedures applied. Output power in the range of 0.025 to 0.1 watt, was obtainable through the use of coplanar triodes (lighthouse). Early versions suffered somewhat in reliability from the variability in life of these microwave oscillators. However, application of World War II techniques with regard to

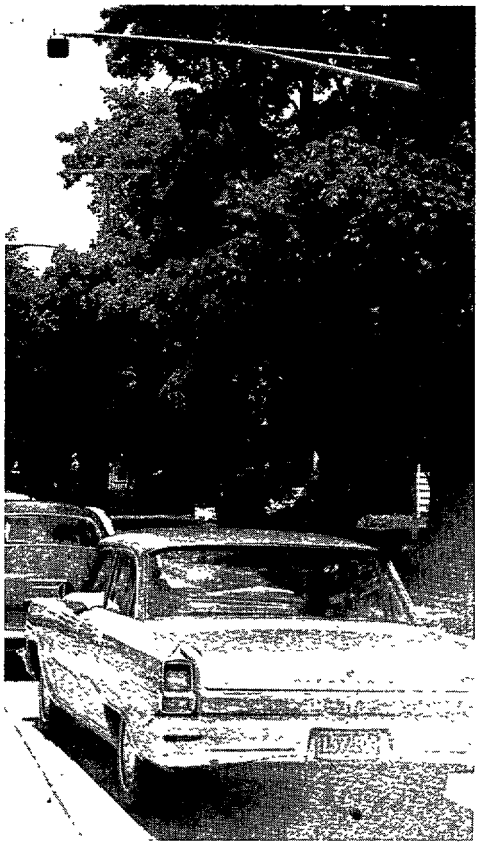

Fig. 1. Installation of separate radar detector antenna.

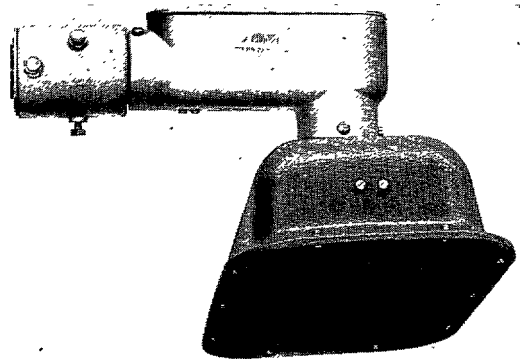

Fig. 2. Radar antenna assembly.

rugged long-life tubes now provide tubes which will provide a MTBF of four years.

FCC licensing procedures allow for any number of these units to be licensed under one common license by any jurisdictional entity such as a state, county, or municipality. The frequency stability requirements require that the oscillator remain within the ISM band which at this frequency is 50 MHz wide. Designs are actually stable within +5 MHz. The power output requirement for simplified licensing is dictated by the FCC clause "not to exceed a 3-watt input to the final stage." The normal design requirements have been covered in the Introduction and Section I-B.

3) *Electrical Hardware Configuration :* The hardware configurations have been determined mostly by customer requirements depending upon whether they wanted a completely self-contained unit mounted above the roadway or whether it was desirable to have the electronics package, less the antenna, separated and mounted at the side of the road for maintenance purposes.

Fig. 1 shows a typical antenna mounted over the roadway with vehicles passing under the unit. Fig. 2 shows the general detail of the antenna and the fitting for mounting it on a conventional mast arm. The broadside array radiates through a plastic radome which is the large flat surface.

4) Circuit Operation : An early version of a simple CW radar detector is shown in Fig. 3. The mixing of the transmitted and received waves to detect the Doppler note can be made directly in a lighthouse tube oscillator V101. The Doppler signal can be extracted at either the anode or grid circuit, although the latter is generally preferred as there is a considerable improvement in the signal-to-noise ratio.

Of electrical interest is the first stage V102, a modified Wein bridge filter tuned to approximately 5 Hz. The sensitivity control R142, in conjunction with the antenna beam pattern, is used to adjust the lateral-lane coverage. Tube 104 provides rectification of the low-frequency Doppler beat note, and V105 responds to the detected signal to produce an output through the closure contacts on relay K101. The particular version shown in Fig. 3 provides multiple output pulses in response to a closely spaced series of low-frequency Doppler signals. This enhances the use of the unit for applications using relatively sophisticated vehicle-actuated traffic signals.

A more recent unit is shown in Fig. 4. The electronics are transistorized, except for the microwave oscillator. The functional operation of the unit can be traced similarly to the early tube version shown in Fig. 3. The similar portion is in the top two thirds of Fig. 4. The bottom one third of the circuitry of Fig. 4 shows an additional feature of the unit that allows sensing of the oscillator RF voltage by the dc bias developed at the grid of V101. Reduction of this voltage below some preselected level provides means for failsafe operation for traffic-signal applications.

B. Speed-Responsible Radar Sensors

The most common form of the vehicle radar speed sensor is the famous, or infamous, radar speed meter. This device is constructed electrically the same as the simple radar detector just described with the following major exceptions: first, the RF signal is kept in line with the direction of travel of the target vehicle, with the cosine of the angle very close to 1.0; and second, there is a substitution in the output of a frequency meter calibrated to read linearly in miles per hour.

Another form of speed sensor which is automatic (to be described in the following paragraphs) provides an output pulse length inversely proportional to speed. This form of output is readily transmitted over conventional telephone lines and is in a form desired for processing in central processing computers.

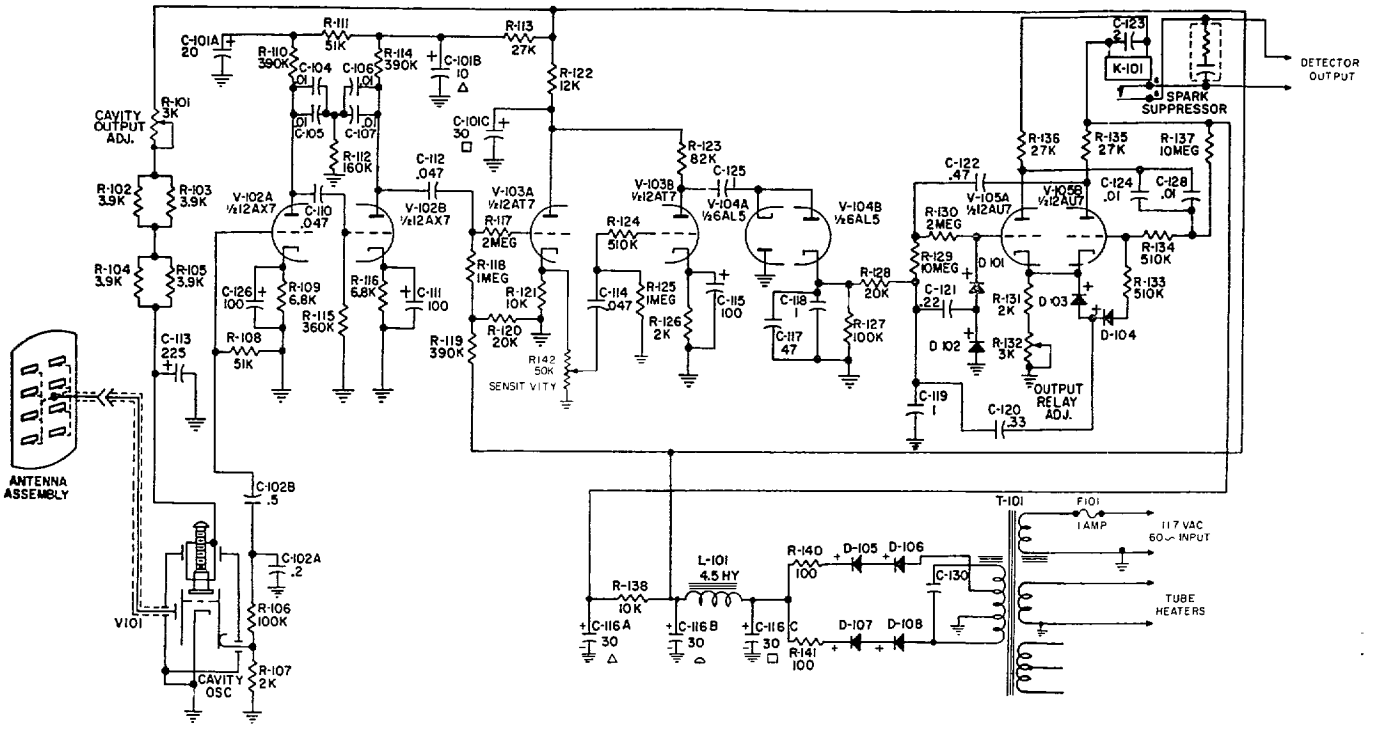

Fig. 3. CW radar detector (tubed).

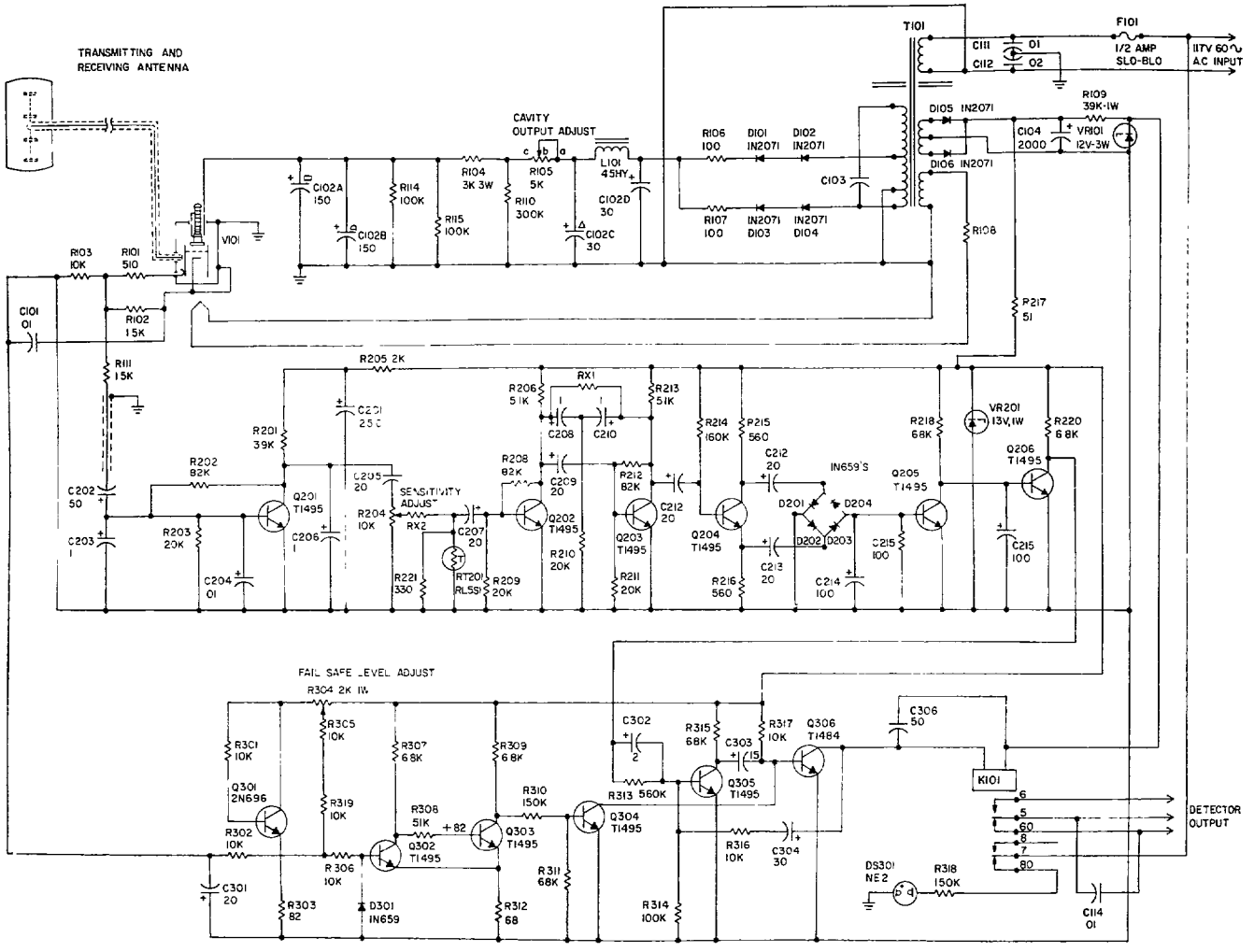

Fig. 4. CW radar detector (transistorized).

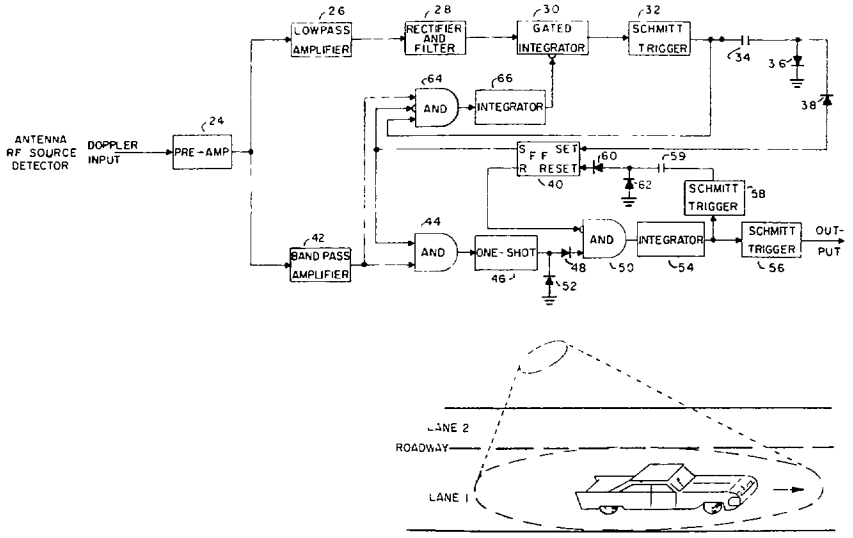

Fig. 5. Block diagram of CW radar sensor.

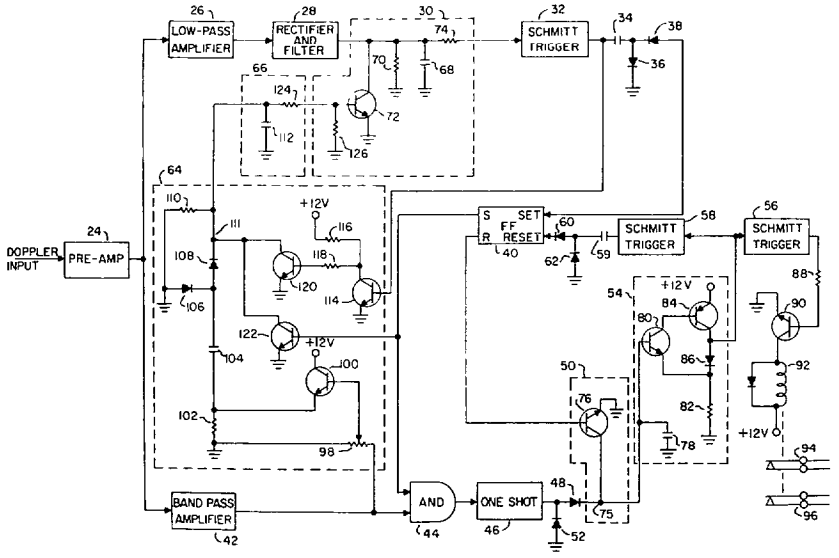

Fig. 6. Circuit diagram of CW radar sensor.

1) *Principle of Operation*: This speed-responsive detector or sensor produces a Doppler signal which includes a low-frequency portion, indicative of the detection of a passing vehicle and a high-frequency portion, indicative of the speed of the passing vehicle. The Doppler signal is divided into its two portions, and the high-frequency speed portion is blocked until the low-frequency detection portion has terminated. The speed portion is then received while the vehicle travels a known distance. The length of time required for the vehicle to travel this distance is a measure of the vehicle speed.

As shown in Fig. 1, the radar sensor antenna is located over the roadway in exactly the same manner as for the simple CW radar detector, with the additional restriction that the beam be directed downstream in order to provide the sequence of low-frequency Doppler signals followed by the high-frequency Doppler signal.

The following is the sequence of events in more detail. The low-frequency signal, as the vehicle goes under the detector, provides a jumping-off point to determine when it will be acceptable to measure a Doppler beat signal, which is more nearly representative of the speed of the vehicle, so that reasonable accuracies can be obtained in the measurement. This also provides the necessary logic which will allow the measurement of the speeds of successive vehicles traveling at short headways. The length of time the low-frequency signal exists is thus used to determine a first-order vehicle-travel distance measurement which, in turn, determines the beginning of the actual speed-measurement operation. The speed-measurement operation is actually carried out by measuring the amount of time required for the reception of a given number of Doppler beats; this time value, therefore, will bear an inverse relationship with the speed of the vehicle.

The parameters of the equipment are chosen such that a selected number of beats are always mensurcd for vehicles traveling the same in-line section of roadway. The applicable cosine function is incorporated in the translation of the output pulse length into speed by the central processor or receiving equipment.

2) *Electrical Design Requirements:* The electrical design requirements of the radar speed sensor are essentially those of the simple radar detector covered previously but with two main exceptions. First, the device requires an elliptical antenna pattern; even though only one lane of the roadway is illuminated, this must extend for a considerable distance downstream in the direction of travel. A convenient antenna pattern employs half power points of 20 and 90°. Second, considerably more logic is needed in the processing of the Doppler beat, note, as can be seen in Fig. 5, which is essentially block dingrammed for ease of understanding. The unique transistorized circuits which are employed are shown in more detail in Fig. 6. The more conventional logic blocks such as flip-flops, Schmitt' triggers. gates, etc., have not been exploded.

3) *Electrical Hardware Configuration* : The hardware configuration is essentially the same for the radar speed-responsive sensor as described for the simple CW radar detector.

4) Circuit Operation: The circuit operation can best, be traced by reference to Fig. 5. First-order speed approximation is derived from the combination of low-pass amplifier 26, which looks at the low-frequency Doppler beat note as the vehicle passes under the antenna. Rectifier-% output is time measured by gated integrator 30 such that the speed-measuring circuit is cocked by means of Scmitt-trigger 32. The turn-on is accomplished by the resetting of integrator 30 and Schmitt-trigger 32. which operates the "set" input of flip-flop 40.

The circuitry provided in AND gate 64 and integrator 66 to the disenabling input of gated integrator 30 provides the reset of gatecl integrator 30 so that, it is possible to concurrently have a vehicle under the detector providing a low-frequency output to determine the next point at which a speed measurement should be taken. At the same time it allows a speed measurement to be made in the integrator-.% circuitry by a preceding vehicle. This allow the separate speed measurement of vehicles traveling at short headways. Integrator 66 essentially counts the Doppler beats as the vehicle travels from directly under the antenna to the point, selected for the initiation of the Doppler-beat counting for the speed measurement.

When flip-flop 40 is turned on, it enables AND gate 50 to initiate the counting of the required number of pulses to provide the proper output pulse length. Prior to AND gate 50 being enabled, the band-pass filter 42 passes the higher frequency Doppler signals to AND gate 44 which wax also enabled by its other input from the flip-flop-40 terminal 8. The output of AND gate 44 is squared by one shot 46 in order that the pulses may be readily counted. After being transmitted through AND gate 50 a fixed predetermined number of pulses are counted in integrator 54, which determines the length of the output pulse. Schmitt-trigger 56 is turned on as soon as integrator 54 shows that it has received one pulse; it remains energized until the sequence is terminated. thus providing a dc at its output, inversely proportionate to the speed. Schmitt-trigger 58 senses when integrator 54 has counted the required number of Doppler beats and thus reset's flip-flop 40 preparatory to the next speed measurement,. As shown in Fig. 5 the resetting of flip-flop 40 resets integrator 54 to zero and, therefore, Schmitt-trigger 56.

III. Acoustical Vehicular Detectors

Acoustical energy has been used as a sensing means for vehicle detection in a number of different. ways. Some early devices were nothing more than amplitude-responsive units which were located near an actuated signalized intersection and required that the vehicle operator co-operate by blowing his horn in order to produce an output from the device. Seedless to say, this was not looked on favorably by the public. To circumvent the annoyance problem, a design, which was used quite extensively for a number of years, had a resonant steel cylinder mounted just under a steel plate at the surface of the roadway. The weight of the vehicle passing over the steel plate deflected it such that it mechanically banged the resonant cylinder. A microphone was coupled acoustically to the cylinder to provide an electrical signal. The signal was then amplified to produce an output pulse. This detector involved extensive installation costs and was subject to considerable maintenance because of the steel plate at the surface of the roadway.

Recent developments have produced acoustical detectors having none of the previously mentioned disadvantages. These units have been made in two types, both of which use supersonic transmitters and receivers. One type employs the Doppler shift due to the movement of the vehicle in the radiated energy to provide a detector output pulse, and the other type uses well-known radar or sonar pulse techniques.

A. Movement-Responsive Acoustical Vehicular Detectors

Acoustical vehicle-motion detectors operate on the Doppler principle. Detection of vehicle motion is accomplished by sensing the shift in the frequency of a tone, which occurs when the tone is reflected from a moving vehicle. The detector uses sound waves at a frequency above the normal audible range. These waves, commonly referred to as being ultrasonic, are propagated through the air.

1) Principle of Operation: The transceiver produces a signal, at approximately 18 kHz, which is beamed from an ultrasonic transducer into the zone where vehicle detection is desired. The presence of a vehicle in this zone causes the beam to be reflected back to a separate receiving transducer. If the vehicle is stationary, no shift in frequency

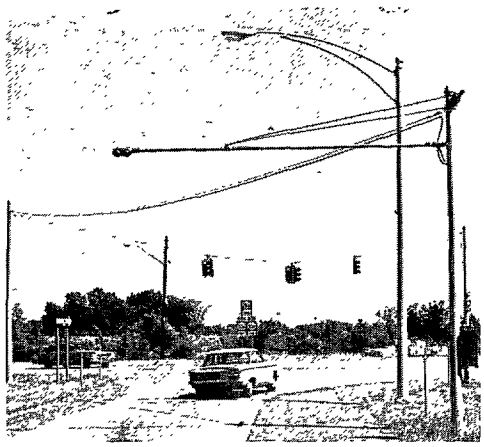

Fig. 7. Installation of motion acoustical detector.

occurs. However, if the vehicle is moving, the reflected signal has a different frequency than that of the transmitted signal, due to the frequency shift created by the Doppler effect. The shift in frequency is directly proportional to the vehicle speed. When the received signal is subtracted from the transmitted signal, a difference frequency, which is equal to the frequency shift, is developed. The presence of this difference-frequency signal is interpreted as an indication of the presence of a moving vehicle.

The detector consists of an electronic transceiver and a sensing unit. The sensing unit contains two transducers, one for transmitting and one for receiving. This sensing unit may be located on a mast arm or a span wire over the traffic lane (see Fig. 7), or it may be mounted by the side of the traffic lane on a structure at the shoulder of the road. The sensing unit is connected to the electronic transceiver which may be remotely located in a weatherproof cabinet. In normal installations the sensing unit is aimed toward the oncoming traffic. For detection to occur, the vehicles must have a motion component in the direction of the transducer beam. When the sensing unit is pointed toward approaching traffic, the signal reflected from a moving vehicle is shifted higher in frequency. Signals reflected from departing traffic are shifted lower in frequency. By detecting only signals shifted higher in frequency and ignoring all other signals, directional detection is obtained.

2) *Electrical Design Requirements*: There are two unique electrical design requirements for the acoustical vehicular detectors. First, the transmitter output to the transmitting transducer should be approximately 5 volts into 10 ohms at 18 kHz to provide overall system signal to noise requirements in the ultrasonic range. A highly efficient electromechanical transducer is required to provide the electrical to acoustical energy transfer for propagation of the wave in air and, conversely, the conversion of the received acoustical energy to electrical energy. Second, the transmitting and receiving transducers should have a beamwidth of a minimum of 20° to half-power points. The normal environmental requirements were described in the Introduction.

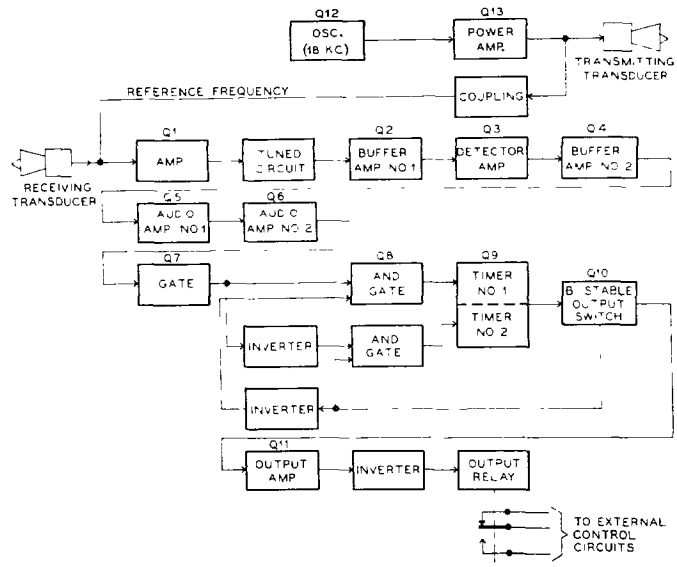

Fig. 8. Block diagram of motion acoustical detector.

3) *Electrical Hardware Configuration*: Fig. 7 shows the installation of the transducers in a common housing mounted over the roadway. An alternate method of installation is to mount the transducers at the side of the road, angled between 45° and 60° from the line of traffic flow, depending upon whether dual-lane or single-lane detection is desired. For side-fire mounting, the unit should be mounted approximately 6 to 8 feet above the roadway surface. A 2-conductor shielded pair is run from both the transmitter and receiver transducers to the electronic equipment which can conveniently be mounted up to 200 feet from the transducers.

The electronic packaging is completely self-contained and includes two printed circuit boards, one for the power supply and one for the transmitter. The calibration and sensitivity-adjusting knobs are mounted on the front surface of the unit, and a suitable AN connector is provided for ease of installation and replacement of the unit. The electronics packaging is in a sheet metal case approximately 2 inches by 8 inches by 8 inches, which is suitable for mounting in conventional weatherproof outdoor housings.

4) *Circuit Operation*: The circuit operation of the acoustical movement-responsive detector can best be understood by reference to Figs. 8 and 9. To simplify the tracing of the circuit operation, the following may be noted.

1) The tuned circuit between $Q1$ and $Q2$ has a bandpass of approximately 2.5 kHz with the low end of the passband such as to reject to a large degree any signals which have a negative Doppler shift, namely, below 18 kHz.

2) The rectified output from $T2$ and the diodes includes only the resultant Doppler beat note which is in the range of 0 to 2.5 kHz.

3) The operation of gate $Q7$ provides a minimum threshold level to insure that a satisfactory target signal is being received.

4) The combination of $Q8$, $Q9$, and $Q10$ has been arranged to provide a clean off–on action of the output

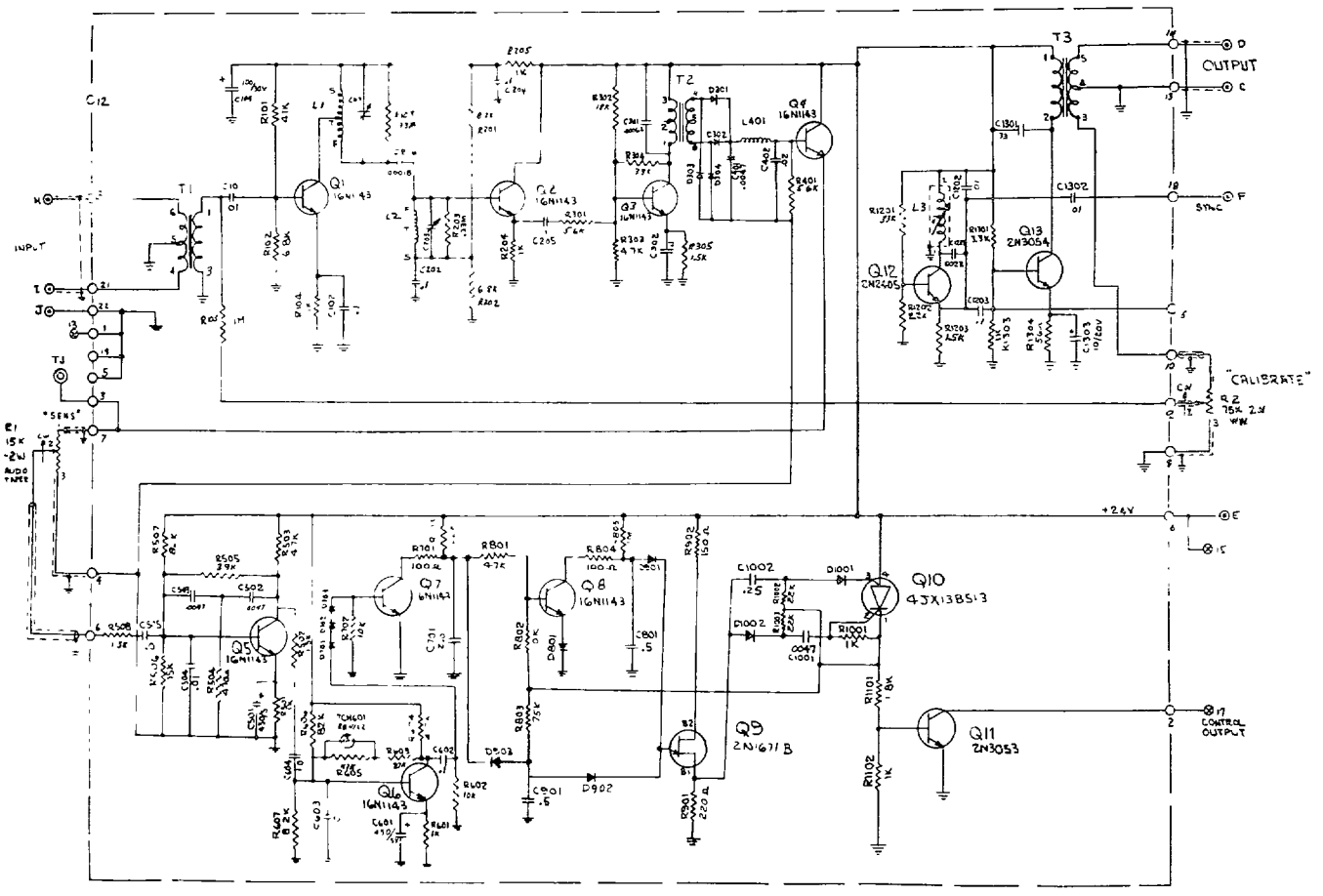

Fig. 9. Circuit diagram of motion acoustical detector.

circuit by toggle action and by incorporating the following delays: a delay in the amount of time that a signal must be received before it is recognized as a true signal, and a second delay which allows for short interruptions in the signal before the output circuit is returned to its normal off position. This circuitry thereby takes care of short transient signals which may be spuriously introduced in the receiving transducer from environmental noise.

B. Presence Responsive

The presence-responsive acoustical vehicular detector operates in the same manner as conventional radar and sonar equipment except that the transmitted energy packet is in the low-supersonic 19-kHz range. The time for the round trip of the transmitted signal to the target vehicle and the reflected signal back to the receiver is measured. Any target within the gated range will produce an output. A single transducer can be used for both the transmission pulse and the received signals.

1) *Principle of Operation*: The velocity of sound in air of approximately 1 ft/ms is used to range gate whether a target is located within a selected distance from a transmitter–receiver unit. A short pulse of 19-kHz energy is transmitted through an electromechanical transducer. The transducer is similar to conventional high-frequency tweeters used in high-fidelity audio systems except that the upper frequency range of the units is extended. The energy is beamed either from over the roadway, as shown in Fig. 10, in which case a vehicle traveling between the roadway and the unit is detected, or from the side of the roadway, in which case the unit sees a vehicle which travels inside of the selected detection range. The received signal from the target vehicle is amplified to a sufficient level for processing and is gated with respect to time so as to only receive signals in the selected target area. The received signals which occur in the selected target range are detected and operate an output work circuit.

2) *Electrical Design Requirements*: The general electrical design requirements for the presence-responsive unit are covered in the Introduction. Transducer requirements are the same as for the movement-responsive acoustical detector. The inherent directivity of high-frequency transducers has been contrary to the desired broad pattern required to properly illuminate the roadway with acoustical energy. Fig. 11 shows the transducer; of significance is an acoustical lens which has been placed in front of the transducer element. This modifies the nominally circular-beam pattern of about 18° between half-power points to an elliptical beam in the direction of travel along the roadway of approximately 18° but with a beamwidth laterally across the road of approximately 30° between half-power points. This improves the pattern

Fig, 10. Installation of presence sonic detector.

so that two lanes of traffic may be covered with one transducer.

3) Electrical Hardware Configuration : For the presence-responsive acoustical detector, it is essentially the same as that, described for the movement-responsive acoustical detector. The major difference is that the transducers associated with the presence-responsive units are beamed either straight down or perpendicularly across the roadway at the vehicles. This insures that a minimum Doppler shift is imparted to the received signal and thereby allows a narrow bandwidth to bo used in the receiver with its associated signal to noise improvement.

One of the mechanical design problems with regard to the transducer is the protection of its mechanical assembly from dust, and dirt. A fine-mesh screen, approximately 30 to the inch, placed in front of the transducer-element orifice provides suitable protection, although it is necessary t o periodically clean the screen i n an extremely dirty environment.

4) Circuit Operation : The circuit operation can readily be traced in Fig. 12. For convenience the three major sections of the electronics hare been shown in the one figure. The top circuit of Fig. 12 comprises the oscillator and modulator section of the unit. Transistors Q14 and Q15 provide the repetition rate for the transmission pulse and the receiver gating. The repetition rate is 80 ms. Q13 is the 19-kHz oscillator for generation of the supersonic energy. Ql2 provides a short unclamped pulse of 3 ms at the beginning of each repetition-rate cycle to turn on modulator Q11. The short burst of 19-kHz energy having a pulsewidth of approximately 2 1/2 ms is amplified by transistors Q10 and Q16 for transmission to the final transmitter driver.

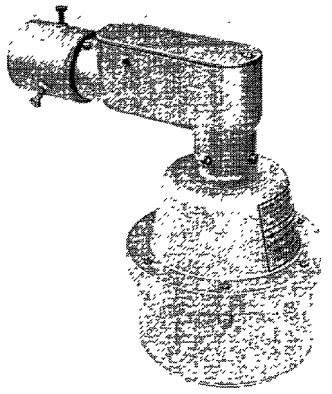

Fig. 11 Presence some detector transducer

The receiver portion of the unit is shown in the center of Fig. 12; in addition to the receiver. It includes the final drivers Q10 and Q14 which provide the energy directly over cables to the transmitting receiving transducer The received signal is coupled through transformer T10 to a tuned amplifier comprising transistors Qll, Q12, and Q13. Back-to-back diodes D10 and D11, shunting the output of transformer T10 reduce the amplitude of the transmitted pulse to a value which will prevent blocking of the receiver. The gain-set potentiometer between transistors Q12 and Q13 is provided to allow the receiver to operate at maximum gain commensurate with local environmental noise. In most applications no reduction in gain is necessary. The output of Q13 drives the range gate and output circuitry.

The range gate and output portion of the circuit is shown in the lower third of Fig. 12. Transistor Q14, in conjunction with resistor R14 and capacitor C12, provides a short pulse at the beginning of the transmission pulse, which lasts fur approximately 10 ms, to the base of Q13. The range-set potentiometer R151 adjusts the magnitude of this 10-ms pulse between a selected 4-to-24-volt pulse level. This pulse at the base of transistor Q12 resets parallel capacitors Cl4 and C15, during which time Q11 is held conductive. Q10, a gated amplifier in the receiver circuit, is thus clamped. The time delay required to charge Cl4 and Cl5 via resistor *R12* provides a time-gating pulse; during this time, transistor-Q11 gate is unclamped. The length of the gating pulse for receiver enabling ranges from 5 to 55 ms and begins approximately 10 ms after the beginning of the transmission pulse. Therefore, during this 10-ms period the output circuits of the range gate and output' board are shut off so that the transmission pulse will not operate into the output. The received signal from the receiver portion of the unit is applied to the gnted amplifier Q10 which is, in turn, connected to amplifier Q15. Any signal in the receiver during the selected receiver gating range is rectified by diode 014. The rectified output of diode 014 is amplified by transistors Ql6, Q17, and Q18 to operate the output relay and its associated output circuit. The output response switch

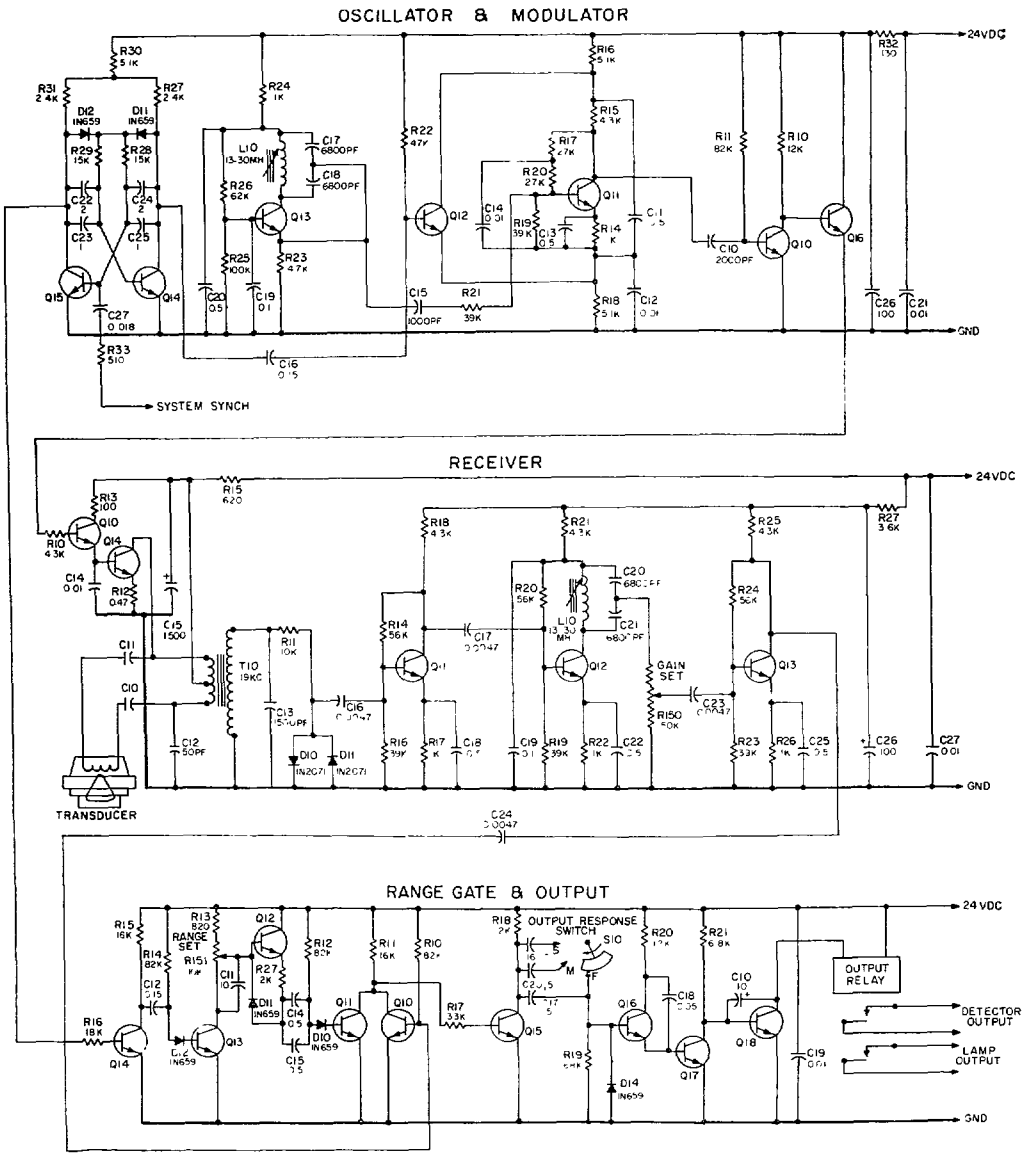

Fig. 12. Circuit of presence sonic detector.

*S*10 provides the means whereby the received pulse may be maintained from one repetition cycle to the next. The variable nature of the target value of a vehicle is apt to make some of the received pulses quite low in amplitude, and the selected capacitors on output-responsive switch *S*10 provide some delay in turning off the output circuit after it has once received a true target signal.

IV. Magnetic Vehicular Detectors

A. *Rate-of-Field-Change Responsive*

Ferrous materials in vehicles carry along with them the equivalent of a localized distortion of the earth's magnetic field. Magnetic-flux changes in sensing coils in or near the roadway provide a ready method of measuring vehicle movement past them. The first magnetic detectors were constructed in the late 1920s using sensing element coils and cores having 1 to 3 ft^3 dimensions which operated into sensitive galvanometer contacting devices. These proved costly to manufacture and install and were subject to considerable maintenance due to the sensitive galvanometers which were required. The advent of vacuum tubes of reasonable reliability in the early 1930s opened up the use of magnetic vehicular detectors since electronic circuitry could be substituted for the galvanometer while still maintaining the desirable feature of an inert sensing coil in or near the roadway.

1) *Noncompensated Magnetic Detector*: The differentiation between noncompensated and compensated magnetic detectors is one of definition of the size of the area to which the sensing element is responsive. A noncompensated unit will in general respond to flux changes in an area as large as 15 feet in diameter. This gives it the ability to cover a large area (three lanes) of a roadway but with only the capability of noting if there is a vehicle or vehicles moving into or out of the area and not how many. This coarseness of detection is ample for use with traffic-actuated signal controllers of the less

sophisticated type. This will be discussed later in more detail. However, it can be said now that the large area of sensitivity leaves the system open to false actuation by flux changes other than those due to vehicle movement.

a) Principle of operation : A widely used embodiment of the noncompensated magnetic vehicular detector uses a sensing element comprising a multiturn coil of wire wound on a ferromagnetic core and having dimensions of about 2 inches in diameter and 18 inches in length (60 000 turns on a +-inch diameter hypernik). It operates much like the magnetic mines of World War II. The unit is placed under or in the roadway, and as near as practical to the path taken by the vehicles to be detected. Satisfactory operation is available for most any orientation of the magnetic element axis, although there is somewhat more consistency to the response if the magnetic axis is operated vertically. The vertical component of the earth's field is much more uniform in the US. Also, the remnant magnetic effect in the vehicle, resulting from the history of its turning corners, is considerably nullified. (The horizontal signature of a vehicle is quite complex, many times appearing as a number of separate dipoles which are subject to complete reversal as a car bangs down a roadway after making turns in the north-south oriented earth's field.)

Flux-density changes of the order of 10 Wb/cm2 are normally experienced in a unit as just described, when a vehicle passes over it. These produce peak output voltages at the terminals of the sensing coil from 0.002 to 0.05 volt, depending upon sensor configuration, sensor location. and vehicle signature. The ranges of signal amplitudes for different vehicles may be as large as 8 to 1 in what otherwise is a constant situation.

As a vehicle travels into the sensor's area of detection, the time-output trace of the signal rises in a modified exponential manner while the vehicle approaches the sensor. It reaches maximum value then falls to zero as the vehicle produces the maximum flux through the sensor. Then there is a negative signal which decays exponentially as the vehicle recedes from the sensor. For any one vehicle maintained in the same magnetic state the usual inverse square and cubic equation relationships can be calculated, but the variability of magnetization of vehicles practically precludes the use of mathematical analysis.

The basic frequencies involved in the trace signature of a vehicle are proportional to the speed of the vehicle going by the sensor. The range of the basic frequencies varies from 1/4 to 40 Hz for vehicles traveling between 3 and 70 miles per hour.

The electronic responsive mechanism is essentially a signal-level sensitive device set to be triggered above some minimum signal which produces an output work pulse. Some integration of the signal is carried out in the electronics as the total flux change is constant for any one vehicle. To a large degree, this removes the rate of flux-change factor resulting from the speed variations over which the detector must operate.

b) *Electrical design requirements:* These requirements of the sensing element of a noncompensated magnetic detector require basically that a signal voltage level be generated of sufficient magnitude to foreshadow the nominally experienced noise signals encountered in the environment of roadways and traffic-signal-controller mechanisms. Experience has shown that the signal level must be a minimum of 0.002 volt into 1000-2000 ohms to insure against noise disturbances induced in the installation and wiring by other adjacent electrical circuits. Also, the electrical portion of the sensing element must be insulated (approaching a MO) from ground, as ground potentials due to electrolysis or voltage drops will provide false signals in the cabling.

The electronic-responsive device connected to the sensing element requires all of the general items listed in the first part of this paper; a few that are of unique interest to this specific detector are the following. First, the responsive passband of the unit must be peaked around 1/2 Hz and must fall off linearly to at least 30 dB down at 40 Hz and to 60 dB down at 60 Hz. The later 60-Hz attenuation is required to eliminate the relatively large induced noise signals from adjacent power circuits. Second, the long-term stability of the amplifier must be self-adjusting. This has been accomplished by using resistancecapacitance- (RC) coupled amplifiers. This, plus the low pass of the amplifier, necessitated the use of the best capacitors and unique coupling circuitry. Third, a long MTBF was secured by operation of all elements and especially the vacuum tubes al, far below nominal ratings. For example, tubes having ratings of 3 mA at 150 volts in the anode circuit are operated at 0.03 mA and 30 volts with related dernting of heaters, etc.

c) Electrical hardware configuration : The sensing elements are encapsulated in a water-tight jacket having high-dimensional stability and ruggedness to withstand the vigors of in-roadway mounting. Conventionally, 2-inch-diameter brass tubing having a wall thickness of 3/32 inch is employed.

The electronic packaging follows good military design. Vacuum-tube designs required a volume of 300-400 in3, while the later transistorized versions have a volume of around 100 in3. Good military design of the printed circuit boards, using glass epoxy material, is a must for moisture protection.

d) *Circuit operation:* Fig. 13 shows an early version of the electronics using vacuum tubes. The design follows conventional RC amplifier design and is readily traced, with the following major deviations:

1) use of a logarithmic reduction of the effect of leakage currents in capacitors, as can be seen in the C3-Cl connection;

2) use of integration-bypass capacitors C2, C4, and C6, which also produce the desired sloping frequency response;

3) use of a portion of the normal change in the dc supply voltage which provides first-order nullification of effects of heater voltage changes in a single-ended very-

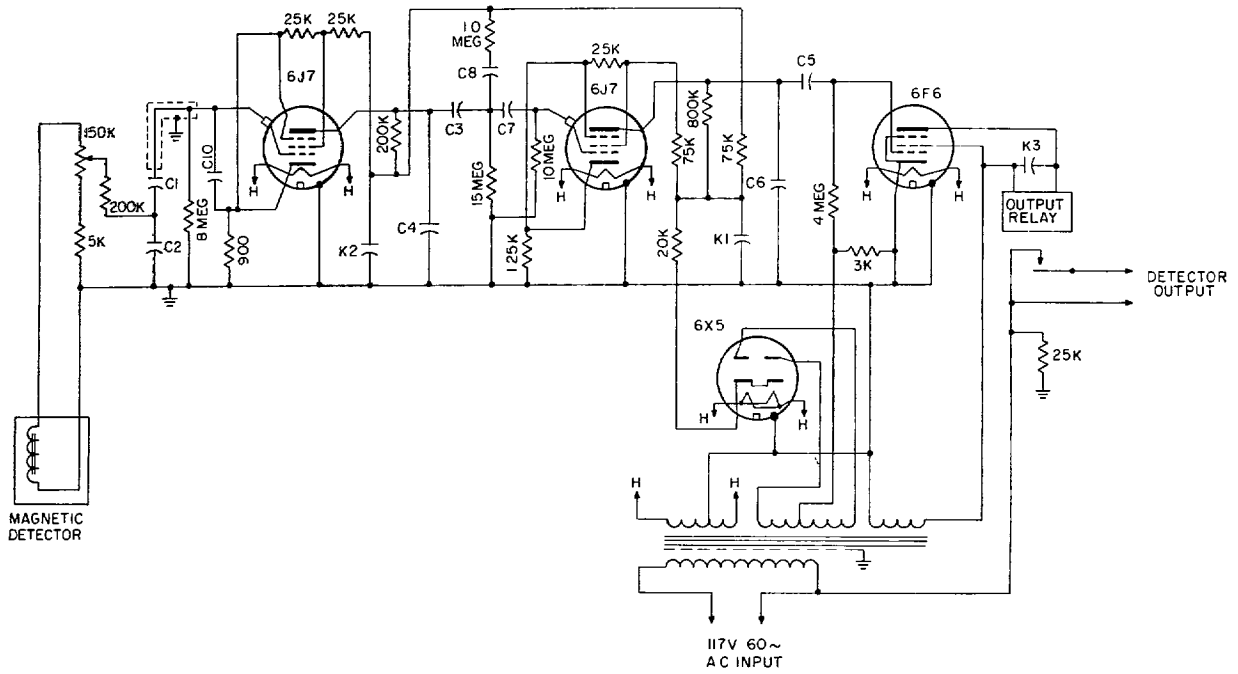

Fig. 13. Circuit of early magnetic detector.

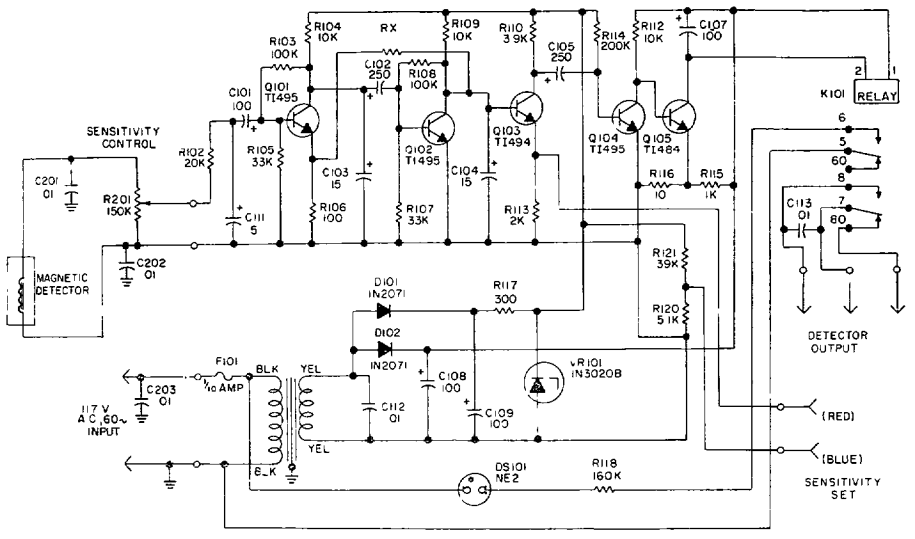

Fig. 14. Circuit of transistorized magnetic detector.

low-frequency-response amplifier; the circuitry comprises C8 and the 10-MΩ resistor; the latter being selectable for specific tubes.

Fig. 14 shows a transistorized version. The transistorized equivalents of the tube version are readily seen. Feedback resistor RX is selectable on assembly to provide uniformity of g in in product units. The sprinkling of 0.01 capacitors are to reduce the magnitude of noise spikes from the power line and from the input circuit; this will protect the transistors from overvoltage failures, a very practical problem in the real-world of transistors and traffic signals.

2) *Compensated Magnetic Detector*: The compensated magnetic detector provides a sharply defined field of coverage which is slightly larger than its physical dimensions at the road surface. This coverage is approximately $6\frac{1}{2}$ feet laterally across the lane, making it suitable for single-lane detection only. Multiple units may be used to cover additional lanes and may be connected into the same electronics. The field of influence in the direction of travel is only a few feet, and from this factor the unit provides good resolution for closely following vehicles. As will be more fully explained in Section IV-A2a, the unit secures its compensated properties by having a narrow

TABLE I
DETECTOR EVALUATION

Detector Type	Single-Lane Count Accuracy	Single-Lane Directional Properties	Single-Lane Coverage Definition	Multi-lane Coverage	Single-Lane Speed Information	First Cost and Installation	Installation Complication	Ease of Maintenance	Environmental Tolerance	Interference Tolerance	Reliability and Life	Power Requirement
Pressure	G 10	G 10	G 10	S 8	G9* S8	S 7	M 7	G 8	S 8	G 10	S 8	G 10
Magnetic	S 7	M7* U7	S 7	G 9	M7* U7	G 9	G 8	G 8	G 8	G 8	G 9	G 8
Magnetometer	G 9	G8* U7	G 9	S 8	S9* S8	G 9	G 8	G 8	G 8	G 8	G 9	G 8
Radar	S 8	S8* M7	S 8	G 9	G 10	M 7	S 8	S 8	G 9	G 8	S 8	S 7
Sonic	S 8	S 7	S 8	S 8	S 8	M 7	S 8	S 8	S 8	G 8	S 8	S 7
Induction loop	G 9	G8* U7	G 9	G 10	S9* S8	G 9	G 9	G 9	G 9	G 8	G 9	S 8

Note: G, good, S, satisfactory, M, marginal, U, unsatisfactory.
* Using two units operated in sequence.

field of influence and by the electromechanical arrangement of its elements. These same properties provide the unit with a highly directional response such that it can effectively nullify its output for vehicles traveling over it in a nonpreferred direction.

The two important features, namely, directional and compensated, are not of as much importance today as they were 10 to 25 years ago. The directional requirement is all but gone because of increased highway width and the resultant elimination of severe crowding. The compensation requirement is gone, as this was needed to protect against the magnetic flux changes associated with the dc propulsion currents in trolley car rails.

a) *Theory of operation*: The compensated magnetic detector can be analyzed by considering it as two separate but similar detectors with an approximately 1-foot longitudinal displacement in the direction of vehicle travel. The two sections operate from the vertical component of the earth's field. The sensing coils of the two sections are connected in series opposition, which results in almost complete cancellation of the output signal, resulting from a disturbance of flux uniformly acting on the 1-foot dimensions of the assembly.

The sequence of the output pulses of each section is the same as described previously for the noncompensated unit. As the vehicle approaches, the output increases in a modified exponential manner, reaching a maximum value as the center of magnetism of the vehicle approaches within a few inches of the center of the section. The output falls to zero as the center of magnetism goes over the section, a reversed-polarity pulse-decaying exponential, as the vehicle recedes from the section. Examining only the polarity sequences as a vehicle travels over the two sections we have: for the first section, minus–zero–plus; for the second section, the reverse connection gives a plus–zero–minus sequence. The output of the second section is displaced in the direction of travel, or timewise, such that the "plus" of the first section now adds to the "plus" of the second section, which occurs while the magnetic center of the vehicle is moving between the two sections. This large summed plus pulse produces the operating pulse in the electronics. While the vehicle is approaching the total assembly, the relative distances to the two sections are not too different and the outputs tend to cancel. For the opposite direction of travel the sequences of the pulses remain the same for each section, but the two are added in the reverse section order. Thus the large output of the assembly, as the vehicle goes between the two sections, produces a large minus output which the electronics rejects. This effect can be enhanced somewhat if the separation of the sections is increased at the cost of a larger unit, but a simpler alternate is to delay with RC networks the output of the downstream section in the preferred or operating direction.

The hardware configuration of the compensated magnetic detector is approximately 5 feet laterally across the roadway, 14 inches in the direction of travel of the vehicle, and 12 inches down from the surface of the roadway. This requires extensive foundation and installation procedures.

The electrical design requirements of the compensated magnetic detector are essentially those of the noncompensated detector previously discussed. This unit operates into identical electronics. Combinations of many units, both compensated and noncompensated, may be operated into one electronic package if the functional output for all of the units is identical, for example, one phase of a vehicle-actuated controller.

V. Analysis and Summary of Vehicle-Detector Application Factors

The extreme variations in the environment where vehicular detectors must operate, the performance and accuracies needed, the installation and first costs, plus many other factors make the selection of any design or

type of detector extremely subjective. In many cases the experience of the user may be the most important factor in deciding the type of unit to be used. Therefore, no attempt will be made to justify the detector evaluation summary shown in Table I, except to say that the writer has been as impartial as possible. The numerals shown in Table I were an attempt to put a numerical weighting factor on each of the relative acceptance criteria.. These factors obviously will be subject to the installation, environment, and, most importantly, the user's judgment. Therefore, they do not necessarily follow the good, satis factory, marginal, and unsatisfactory classification.

In conclusion, it is hoped that this paper has shown that there are many embodiments of vehicular detectors based on many physical phenomena which can satisfactorily be used. More sophisticated and/or cheaper units will unquestionably be developed in the next decade if for no other reason than the fact that the present effort of the Department of Transportation will be reflected in requirements for increased numbers of detectors.

ACKNOWLEDGMENT

The author wishes to thank the *General Railway Signal* Company and the Automatic Signal Division, LFE Corporation, Norwalk, Conn., for material and aid used in the preparation of this paper. The detectors and sensors described are manufactured by the following companies: radar detectors-SFIM (Great Britain) Ltd.; sonic detectors--Vehicle Traffic Control Department, General Railway Signal Company; magnetic detectors-Eagle Signal Division, E. W. Bliss Company; Gammatronix, Inc.; and Singer Traffic Equipment Division; sonic and magnetic detectors-Traffic Control Products, Crouse-Hinds Company; and sonic, magnetic, and radar detectors-Automatic Signal Division, LFE Corporation.

REFERENCES

[1] J. E. Bearwald, *Ed. Traffic Engineering Handbook*. Institute of Traffic Engineers, Raleigh N. C. Edwards and Broughton co., pp. 439-457.

[2] *Manual on Uniform Traffic Control Devices for Streets and Highways*. Washington, D. C.: Bureau of Public Roads, U. S. Dept. of Commerce, 1961, pp. 3E-11-3E-15.

Future Vehicle Detection Concepts

MILTON K. MILLS, MEMBER, IEEE

Abstract-This paper presents some of the economic and technical considerations for development of future noncooperative vehicle-detector systems. Vehicle-detector accuracy requirements, installation cost, location, and the roadway environment are used to develop a set of preferred vehicle detector characteristics. In addition, a description of vehicle detectors, considered for development by the Bureau of Public Roads, and some of the current vehicle-detector concepts under development, are presented.

INTRODUCTION

VEHICLE-detection systems are essential elements of more advacned traffic advisory, command and control systems for improving the efficiency and safety of the highway network. This paper will present some of the economic, and technical considerations for development of future noncooperative (i.e., vehicle does not have active or passive devire to aid detection) vehicle detector systems as well as one of the vehicle-detector systems currently being developed by the Bureau of Public Roads Some of the problem areas encountered in the Bureau of Public: Roads traffic system programs employing off-the-shelf vehicle detectors are

1) excessive vehicle-detector system hardware cost,.
2) excessive vehicle-detector system installation cost,
3) vehicle-detector accuracy and precision insufficient to meet the requirements of more advanced traffic-control systems, and
4) lack of set of environmental specifications of ambient conditions and external noise levels to guide vehicle-detector design and evaluation.

OFF-THE-SHELF VEHICLE DETECTORS

Among the various types of off-the-shelf vehicle detectors employed in present traffic-control systems are treadles, magnetic detectorsm inductive loop detectors, continuous wave (CW) and pulsed sonic detectors. and CW Doppler radar detectors. So single off-the-shelf vehicle detector produces output signals proportional to vehicle presence (stopped vehicle), passage (moving vehicle), and speed where speed is not computed assuming a single average length.

Manuscript received August 28, 1969; revised October 27, 1969. Background information for this paper was developed during contract research for the Bureau of Public Roads, The opinions, finding, and conclusions expressed are those of the author and not necessarily those of the Bureau of Public Roads.

The author is with the Traffic Systems Division, Bureau of Public Roads, Washington, D. C.

Treadles are installed in the roadway flush with the pavement surface and provide a closed electrical circuit when mechanically actuated by the vehicle wheels. Treadles have been extensively used for controlling parking lot gates and traffic-actuated controllers for traffic signals. They normally provide an output for each vehicle axle passing over the treadle. Magnetic detectors of the flux-gate magnetometer type with a saturable core have a sensing head installed in the roadway near the pavement surface and provide an output pulse when the magnetic material of the vehicle changes the vertical component of the earth's magnetic field. Magnetic detectors normally provide an output pulse due to vehicle passage. A description of the magnetic characteristics of vehicles and operation of magnetometers is available [1].

Inductive loop detectors employ two or three turns of no. 14 size wire installed in the roadway in a nominally six foot square loop which is excited with low-frequency energy (100 kHz). Eddy currents, induced in the detected vehicle, decrease the total inductance of the loop which causes a phase or amplitude shift. The corresponding output pulse provides an indication of vehicle presence or passage. Pulsed sonic detectors have a sonic reflector mounted above the roadway in an overhead or sidefire position and direct sonic energy (20 kHz) at the vehicle. The pulsed sonic detector senses vehicles at a selected range by opening a gated receiver only when the reflected sonic energy, corresponding to the selected range, returns. Pulsed sonic detectors provide an output pulse for vehicle presence or passage.

CW sonic detectors have the sonic energy reflector mounted above the roadway in an overhead or sidefire position. In addition, the reflector is commonly mounted at a 45° angle with respect to the vehicle direction of travel to enhance vehicle speed determination by Doppler means. The CW sonic detector provides an output pulse corresponding to vehicle passage, direction and speed. CW radar detectors have the antenna system mounted in a manner similar to CW sonic detectors. The CW radar detectors operate at a frequency of 2455 MHz or 10 525 MHz and may provide output pulses corresponding to vehicle passage, direction, aud speed.

Vehicle Size Range

The vehicle detector should sense all types of vehicles, from small motorcycles to large trucks. An approximate vehicle size range [2] is presented in Table I.

Vehicle Detector Accuracy Requirements

Modern computer-controlled traffic systems [3] have more complex vehicle-detection requirements than those do for normal traffic-actuated controllers for traffic signals, for which many off-the-shelf vehicle detectors were designed. One study [4] of the vehicle-detection requirements for area traffic surveillance and control systems indicated that two inductive loop detectors must be spaced a large, impractical distance apart, to measure vehicle speed with sufficient accuracy.

TABLE I

Vehicle Size	Range (feet)
Maximum length	5–48
Maximum width	2–8
Maximum height	4–12
Wheel base	3–43
Axle height	1.2–2

TABLE II

Traffic Parameter	Tolerance 95% of the time
Passage (function of vehicle speed and length)	Less than 2 percent error for 90 percent of the time
Direction	Zero error for Passing Aid System (PAS) II program
Presence (stopped vehicle)	Less than 2 percent error for 90 percent of the time
Spot speed	5 percent error
Acceleration	5 percent error
Vehicle length	5 percent error
Headway	5 percent error
Density	Less than 5 percent error for 90 percent of the time
Volume	5 percent error
Queue length	5 percent error
Space occupancy	5 percent of space occupied

TABLE III

City	Approximate Number of Signalized Intersections	Total Estimated Installation Cost (4 Detectors Per Intersection) (millions)
Los Angeles, Calif.	3000	3.6
Baltimore, Md.	1036	1.2
Buffalo, N. Y	588	0.7
Washington, D. C.	800	1 0
Toronto, Ont., Canada	1000	1.2

Another study [5] of the vehicle-detector accuracy requirements for traffic programs being conducted by the Bureau of Public Roads resulted in some of the vehicle-detector accuracy requirements presented in Table II. Since off-the-shelf vehicle detectors do not satisfy the accuracy requirements for all of the traffic programs being conducted by the Bureau of Public Roads and detector hardware and installation costs can consume up to 50 percent of the costs of an advanced traffic control system, the most important single factor in determining the feasibility of a vehicle detector system is economic, not technical.

Vehicle Detector Installation Cost

The importance of a vehicle detector system which can be economically installed is illustrated in Table III, which assumes an estimated installation cost of 300 dollars per detector. The cost of the vehicle detector itself is not included. Four vehicle detectors per intersection is expected to be a conservative estimate of the number required for urban traffic control. An example of vehicle

TABLE IV

Vehicle Detector Type	Installation Method	Installation Time	Installation Cost Per Detector (dollars)	Detector Hardware Costs (dollars)
Inductive loop	1-4 turns of insulated no. 14 gauge wire installed in a rectangular slot 3/16 in wide by 5/8 - 1 3/4 in deep cut into the pavement surface. Loop size from 4 by 4 to 8 by 100 ft with 750-ft maximum lead in length.	2-4 hours	384	175
Magnetic (flux gate magnetometer)	2-in diameter by 8-9 in deep hole in pavement surface with 100-ft nominal lead in length.	3-4 holes/hour	234	175
Magnetic (other)	Mounted flush with road surface in 2-in by 19-in slot or slid into a 2-in diameter nonmetallic conduit in a bored hole from roadside not more than 12 in below the pavement surface.	4-12 hours	200-300	200
Treadle	Installed flush with the road surface in a 7-ft by 14-in by 8 1/2-in excavated trench sealed with concrete.	2-3 days	624	250
Sonic and radar	Mounted on a pole in overhead or sidefire position.	2 hours, if pole exists	100-700	500

detector system costs is the Passing Aid System (PAS II) program [6] of the Bureau of Public Roads which will instrument a G-mile length of roadway in Maine with 400 nodes of 4 inductive loop detectors each for a total of 1600 inductive loop detectors. The estimated PAS II vehicle detector system costs in dollars as follows:

1) inductive loop detector station hardware	175 000
2) installation of detector station housing. power, signal cables, and station hardware	235 000
3) procurement, and installation of loop and lead-in to roadside	101 000
4) power connection.	10 000
total	521000

Table IV presents a description of installation data and costs of current vehicle-detection systems. Some of these data were obtained from [T].

At the present time no known installation method for off-the-shelf vehicle detectors offers a significant reduction in installation cost. Future vehicle detectors should be designed so that their installation is economical and that they can be installed quickly to minimize interruption to traffic flow. The vehicle-detector location has a significant effect in determining installation costs, as can be seen from the wide cost spread for installation of sonic or radar detectors in Table IV.

One method of indirectly redwing installation costs is to reduce the number of required vehicle detectors in traffic applpications requiring vehicle speed. Vehicle speed is commonly determined by using two detectors spared a known distance apart, or from a single detector by calculating vehicle speed from the length of the detector pulse. It is assumed that all vehicles have length of approximate13 17.i feet. The accuracy of the latter method may not be sufficient' for all traffic applications because of the wide range of vehicle lengths presented in Table I. A more accurate method of determining vehicle speed from a single detector is to use vehicle Doppler information. Another method of determining vehicle speed from a single detector is to calculate vehicle speed from the transducer output pulse-rise time assuming a simular pulse shape for all vehicle types. The accuracy of the latter method has not been determined.

VEHICLE DETECTOR LOCATION

Off-the-shelf vehicle detectors are usually installed in one of three positions (i.e., in the pavement, sidefire, or overhead). For multilane vehicle detection requirements, the detector is installed either over the lane or in the lane near the pavement surface in order to obtain an unobstructed view of the vehicle being detected. Vehicle detectors which are installed in the roadway near the pavement surface are preferable for multilane applications for the following reasons:

1) certain types of vehicle detectors can be installed in the roadway more cheaply than a mechanically stable overhead mounting structure can be fabricated and installed.
2) structural supports for overhead mounting could create a safety hazard, and
3) overhead structures are not permitted in some areas because of detraction from scenic beauty.

Off-the-shelf vehicle detectors which are installed in the roadway are treadles, magnetic detectors, and inductive loop detectors; the latter is presently the most widely employed vehicle detector in current Bureau of Public Roads' traffic systems programs. To develop a reliable

vehicle detector for installation in the roadway, detailed knowledge of the expected roadway environment is necessary.

Roadway Environment

A vehicle-detector sensing head installed in the roadway near the pavement surface is subjected to a wide range of environmental conditions. For this reason a detector sensing head which contains only passive components appears desirable for roadway installation. Since a set of environmental standards to assure reliable operation of electronic equipment installed in the roadway is currently unavailable, the range of environmental conditions presented in Table V is proposed by the author.

A vehicle-detector system, which will operate reliably to sense vehicles when the detector sensing head is paved over with asphalt, is desirable to reduce reinstallation costs. The detector sensing head should also be mechanically designed to withstand snowplows, spiked tires, tires with chains, and roadway vibration caused by passing vehicles. Malfunctions during extreme environmental conditions should be sensed by the system.

Future Vehicle Detector System Characteristics

In summary, the requirements of future noncooperative vehicle-detector systems suitable for deployment in large numbers are the following:

1) installation in pavement such that the detector is not damaged by snowplows, vehicles with spiked tires, or chains, and vibration;
2) mechanical configuration, allowing rapid and economical installation and maintenance;
3) economical detector system hardware;
4) detection of stopped vehicles (presence), detection of passing vehicles (measure of vehicle speed) over a speed range of 0 to 80 mi/h, determination of vehicle speed over a speed range of 0 to 80 mi/h, determination of vehicle direction;
5) vehicle presence, passage, speed, and direction from a single-detector unit;
6) detection zone covering only one lane width (i.e., not sensitive to vehicles in adjacent lanes);
7) detection of different types of vehicles (i.e., motorcycles, cars, trucks, etc.);
8) separation of closely following vehicles;
9) less than 2 percent error for 90 percent of the time,
10) reliable operation under all roadway environmental conditions;
11) adequate signal-to-noise ratio for operation in an urban noise environment; and
12) life expectancy greater than four years.

Vehicle Detectors Considered for Development

A systems analysis [8] of vehicle detection techniques was conducted for the Bureau of Public Roads and resulted in the selection of three vehicle-sensing techniques considered promising for development. One concept is an induction coil detector which senses electrical noise generated by the vehicle electrical system (i.e., ignition, generator–alternator, regulator, etc.) Fig. 1 presents a diagram of this type of detector. The characteristics of a typical sensing coil installed in the roadway near the pavement surface are the following:

TABLE V

Temperature range	−40°F to 170°F
Humidity	0 to 100 percent
Snow depth	9 inches maximum
Snow–ice mixture depth	6 inches maximum
Ice depth	1 inch maximum
Water depth	1 inch maximum
Soil depth	1 inch maximum
Grease–oil depth	$\frac{1}{16}$ inch maximum
Vibration level and frequency	not estimated.

inductance	7.9 mH
winding	single layer, close wound
core length	3.25 inches
core diameter	$\frac{3}{8}$ inch
core material	Mumetal (laminated).

The sensing coil-output voltage is amplified (gain of 200), filtered (20 kHz with 3-dB bandwidth of 3 kHz), and rectified by a full wave rectifier. When the rectifier-output voltage exceeds a preset threshold, a digital output is provided.

Fig. 2 illustrates a typical signal measured with a storage oscilloscope at the sensing coil output during vehicle passage.

Although the induction coil detector is simple, economical, and relatively easy to install (i.e., requires a hole and a slot to each side of roadway), the detector should not be sensitive to external electrical noise generated by neon lights, industrial machines, vehicles in undesired locations, etc. However, the detector should be sensitive to all types of vehicles including vehicles which contain mobile (two-way) radio equipment (i.e., emergency, law enforcement, and commercial vehicles in addition to vehicles containing citizen band, and amateur equipment). Vehicles with mobile radio equipment commonly employ noise-suppression techniques to prevent electrical interference to the vehicle's radio equipment. The induction coil detector will also detect the front or engine compartment of some vehicles while detecting the rear of vehicles with rear mounted engines. In addition, limited measurements [9] indicated a marginal signal–to–noise ratio of about 2:1 with the vehicle engine compartment one foot from the sensing coil. Because of the marginal signal–to-noise ratio, the induction coil detector was not selected for further development by the Bureau of Public Roads.

Another vehicle detector concept, which appeared promising for further development, used a field asymmetry sensing technique (FAST) [10]. The FAST detector employs two coils with orthogonal axes spaced approximately 2.5 feet apart. The two coils are installed in the roadway near the pavement surface. Vehicle detection measurements were conducted using two coils with the following characteristics:

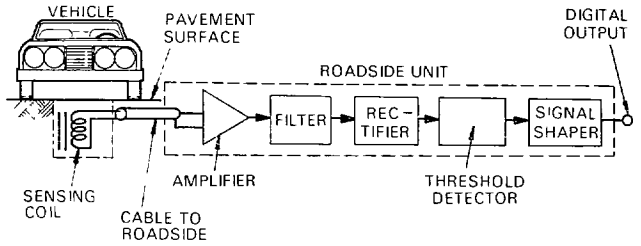

Fig. 1. Electromagnetic induction coil detector.

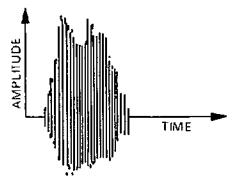

Fig. 2. Electromagnetic interference coil output for moving vehicle.

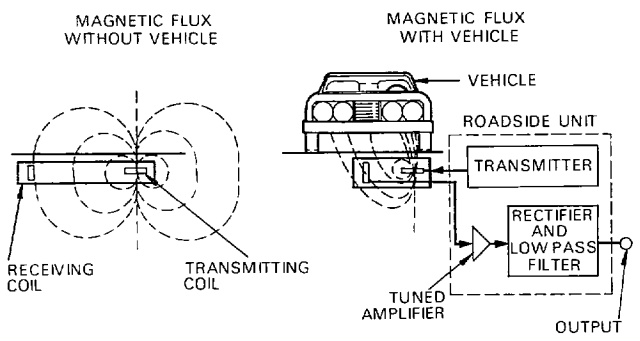

Fig. 3. Fast detector operation.

inductance	8 mH
winding	440 turns of no. 34 AWG
core length	3 inches
core diameter	$\frac{3}{8}$ inch
core material	Mumetal
resistance	18 ohms.

Fig. 3 is a diagram of the FAST detector. The transmitting coil operates at a frequency of 15 kHz and the amplifier voltage gain is 500. Eddy currents induced in the approximately flat vehicle undercarriage modify the magnetic field of the transmitting coil which results in energy being coupled into the receiving coil.

Fig. 4 illustrates the vehicle under-carriage simulated by an infinite conducting plane, which produces an image coil in the position shown. Since the primary transmitting coil induces zero voltage in the orthogonal receiving coil, the induced voltage in the receiving coil is produced only by the x component of the magnetic field produced by the image coil. Neglecting ground currents, the magnetic field components [11] for a small magnetic dipole are the following:

$$A_\phi = (m/4\pi)[(ik/r + 1/r^2) \sin\theta \exp(-ikr)]$$

$$H_r = (m/2\pi)[(ik/r^2 + 1/r^3) \cos\theta \exp(-ikr)]$$

$$H_\theta = (m/4\pi)[(-k^2/r + ik/r^2 + 1/r^3) \sin\theta \exp(-ikr)]$$

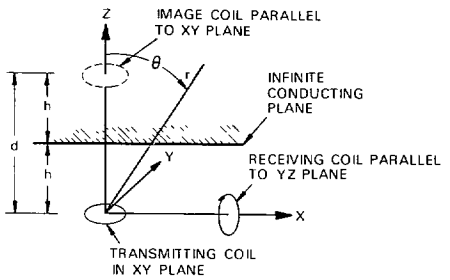

Fig. 4. Simulated vehicle undercarriage.

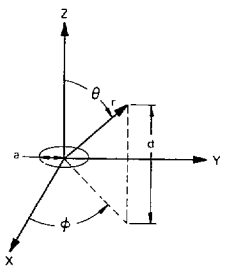

Fig. 5. Coordinate system.

where $k = \omega(\mu\epsilon)^{1/2}$, and m is the dipole moment ($\pi I a^2$ for a single-turn loop of radius a).

The coordinate system is illustrated in Fig. 5. For small kr which is applicable to a frequency of 15 kHz.

$$A_\phi = (m/4\pi r^2) \sin\theta$$

$$H_r = (m/2\pi r^3) \cos\theta$$

$$H_\theta = (m/4\pi r^3) \sin\theta.$$

The components of the magnetic field in the xz plane are the following:

$$H_z = (m/4\pi r^3)(3\cos^2\theta - 1)$$

$$H_x = (3m/4\pi r^3) \sin\theta \cos\theta.$$

The optimum coil spacing for an assumed average vehicle height h is determined by differentiating the x component of the magnetic field produced by the image coil and finding the maximum value. Using the coordinate system of Fig. 5 and assuming a constant value of d:

$$H_x = \frac{3mxd}{4\pi[d^2(1 + x^2/d^2)]^{5/2}},$$

letting $u = x/d$

$$H_x = \frac{3m}{4\pi d^3}\left[\frac{u}{(1 + u^2)^{5/2}}\right].$$

The maximum value of Hx occurs at $u = 1/2$ or $x/d = x/2h = 1/2$. For coils near the roadway surface the optimum coil spacing x is equal to the average vehicle under carriage height. A commercially available vehicle sensor [12] which employes two orthogonal sensing coils excited at a frequency of 50–100 kHz has a diameter of 8.5 cm, a length of 65 cm, and an approximate coil spacing of 50 cm.

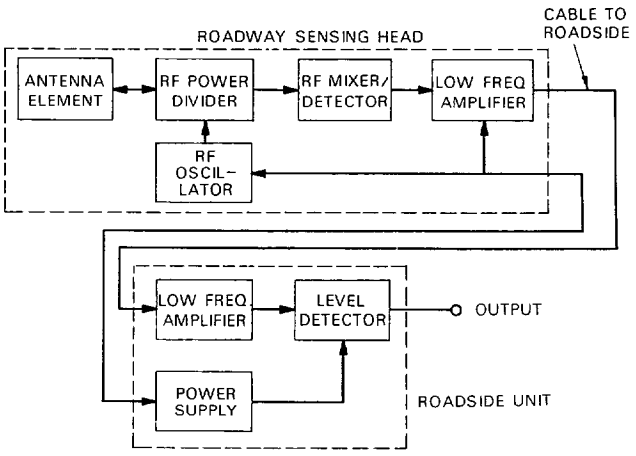

Fig. 6. RF vehicle detector.

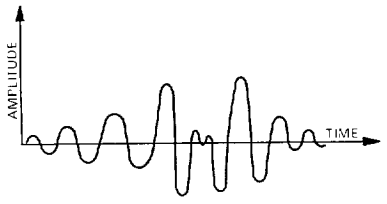

Fig. 7. RF detector for moving vehicle.

Since the two coils of a FAST vehicle detector must be mechanically stable, a structure or bar is required between the two coils for mechanical stability to prevent coil axis rotation which will couple the z component of the magnetic field from the transmitting coil into the receiving coil. The FAST vehicle detector was not selected for development by the Bureau of Public Roads because of the mechanical stability requirements and unattractive installation configuration (i.e., a slot greater than 0.25 inch wide).

Future Vehicle Detector Development

As part of its research and development programs, the Bureau of Public Roads is currently evaluating the characteristics and possible advantages of a radio frequency (RF) type vehicle detector. The present design for the detector provides a response to vehicle passage. An engineering model [13] of this detector is presently being developed under contract FH-11-6973 for the Bureau of Public Roads.

A diagram of the vehicle detector is presented in Fig. 6. The detector consists of a cylindrical sensing head which is installed flush with the roadway surface in a three inch diameter by four inch deep hole. The sensing head contains a transistor RF oscillator, operating at 915 MHz, RF power divider, cavity-backed antenna element, detector–mixer diode and low-noise high-gain operational amplifier. The output from the operational amplifier is connected by a cable to roadside equipment containing a signal amplifier stage, voltage level detection circuit, and power supply.

Fig. 7 illustrates the output from the sensing head during vehicle passage. A sharp change in received signal level amplitude occurs as the vehicle approaches the sensing head because of the improved radar cross section presented by the approximately flat vehicle undercarriage. This sharp change in received signal level is very advantageous in discriminating between closely following vehicles, and appears to be one of the significant characteristics of an RF-type vehicle sensor installed in the roadway.

The required antenna-element size is the major factor in determining minimum-sensing head diameter. A two-arm log spiral-antenna element (2.625-inch diameter by 0.75-inch deep cavity) is used in the initial model of the RF detector. Since a spiral antenna in the sum mode requires a maximum cavity diameter d of $d = \lambda/\pi$, and a cavity depth of $\lambda/4$, where λ is the wavelength corresponding to the lowest operating frequency, the spiral arms were loaded with a resistive card to lower the antenna Q and efficiency because of the smaller than normal cavity dimensions.

The sensing-head antenna element should provide sufficient directivity to discriminate against vehicles in adjacent lanes and have a physical size and shape suitable for economical installation. Although the 3-dB antenna element beamwidth for optimum vehicle detection characteristics has not been experimentally determined, an estimated 3-dB antenna element beamwidth between 50° to 70° should provide acceptable vehicle-detector performance.

The optimum frequency of operation has not been established; however, the highest frequency of operation will be limited by component cost, frequency allocation, and the worst case roadway environment for which the detector is expected to operate satisfactorily. Recent measurements using the previously mentioned antenna element operating at a frequency of 2455 MHz indicate improved vehicle-detection sensitivity over that observed at 915 MHz; it is expected that the final engineering model will operate at 2455 MHz. Effects of snow, ice, grease, oil, tar, soil on antenna performance for different operating frequencies, and antenna-element polarizations are presently unknown when the previously mentioned materials are in the near field of the antenna where the normal assumption of a plane-wave front is no longer valid.

RF-Vehicle Detector Characteristics

The significant characteristics of the RF-vehicle detector under development are the following:

1) sensing head enclosed in weather proof sleeve, mechanically designed to withstand the loading caused by passing vehicles,
2) sensing-head installation costs similar to those for off-the-shelf magnetic detectors having similar size and shape,
3) ability to differentiate between different types of vehicles in detection zone,

4) ability to separate closely following vehicles,
5) capable of operation over a temperature range of -40°F to +71°F, not subjected to other environmental conditions, and
6) vehicle presence, passage, speed, and direction from a single-detection unit may be possible.

FUTURE IN-HOUSE VEHICLE DETECTOR DEVELOPMENT

Another RF-vehicle detection concept is being developed by the author for the Bureau of Public Roads. A problem with RF-vehicle detectors which are installed in the roadway is providing a detection zone which is uniform over the lane width and zero outside of the lane boundary. For example, the radar scattering cross section of a large truck in an adjacent lane is much larger than the radar scattering cross section of a motorcycle in the desired lane near the lane boundary. A vehicle-detector concept, using an antenna element (half wave dipole approximately equal to lane width) installed in a slot across the lane, is being investigated. The presence of a vehicle is expected to interact with the near field of the antenna element resulting in a detectable antenna-input impedcnce change. This type of RF-vehicle detector is expected to be easy to install and have a better defined detection zone.

SUMMARY

This paper presented some of the desirable design and performance characteristics for future vehicle-detector systems. Future research is required to obtain a more detailed definition of the traffic parameter-accuracy requirements. detector-stability requirements, and roadway environmental conditions. The development of a vehicle-detector system which is economical to install and maintain is of major importance in determining the economic feasibility of traffic system programs requiring large numbers of detectors. The detector concepts presented in thr paper represents an attempt to solve some of the problems associated with off-the-shelf vehicle detectors.

ACKNOWLEDGMENT

The author wishes to thank Dr. T. Pendleton for helpful discussions and assistance regarding electromagnetic theory; and Dr. E. Jervis and L. Saxton for their helpful suggestions concerning thr entire paper.

REFERENCES

[1] "Traffic sensor program," prepared for the Bureau of Public Roads, Federal Highway Administration by Texas Instruments, Inc., Contract FH-11-6973, August 1969, pp. 2-12-2-18, G-C-3.
[2] "Vehicle classification system, dimensional properties," prepared for the Bureau of Public Roads, Federal Highway Administration by Texas Instruments Inc. Contract FH-11-6973, August 1969, pp. W-2-10.
[3] G. D/. Friedlander, "Computer-controlled vehicular traffic," *IEEE Spectrum, vol. 6*, pp. 30-48, February 1969.
[4] "A study to determine the feasibility of development of an area traffic surveillance and control system," prepared for the Bureau of Public Roads, Federal Highway Administration by General Electric Company, Contract, FH-11-6379.
[5] "Information parameters," op. cit., Appendix K.
[6] S. Byington, private communication,, 1969.
[7] "Sensor systems evaluation," op. cit. (4), p. 2-77.
[S] "Sensor systems evaluation," op. cit. (1), section IID.
[9["Electromagnetic induction pickup coil detector," op. cit. (1), pp. F-la-F-30.
[10 "Magnetic sensors." op. cit. (1), Appendix C, pp. C-U-C-14.
[11] G. V. Keller and F. C. Frisehknect, *Electrical Methods in Geophysical Prospecting* New York, N. Y.: Pergamon, 1966, pp. 294-295.
[12] "Annexe Detecteur de Vehicles," Sainte-Cloud: Electronique Marcel l Dassault 1967.