U.S. Department
of Transportation

**National Highway
Traffic Safety
Administration**

DOT HS 808 261

March 1995

Final Report

"Integration of In-Vehicle Electronics for IVHS and the Electronics for Other Vehicle Systems"

This document is available to the public from the National Technical Information Service, Springfield, Virginia 22161

This publication is distributed by the U.S. Department of Transportation, National Highway Traffic Safety Administration, in the interest of information exchange. The opinions, fiidings and conclusions expressed in this publication are those of the author(s) and not necessarily those of the Department of Transportation or the National Highway Traffic Safety Administration. The United States Government assumes no liability for its contents or use thereof. If trade or manufacturers' name or products are mentioned, it is because they are considered essential to the object of the publication and should not be construed as an endorsement. The United States Government does not endorse products or manufacturers.

Technical Report Documentation Page

1 Report No. DOT HS 808 261	2. Government Accession No.	3. Recipient's Catalog No.
1. Title and Subtitle "Integration of In-Vehicle Electronics for IVHS and the Electronics for Other Vehicle Systems"		5. Report Date March 31, 1995
		6. Performing Organization Code
7. Author(s) David Lee, Robert McOmber, Ron Bruno		8. Performing Organization Report No. TR95019
3. Performing organization Name and Address Stanford Telecommunications, Inc. 1761 Business Center Dr. Reston, Va. 22090		10. Work Unit No. (TRAIS)
		11. Contract or Grant No. DTNH22-93-D-07317
12. Sponsoring Agency Name and Address National Highway Traffic Safety Administration (NHTSA) Office of Collision Aviodance Research (OCAR) 400 7th St. SW, Rm. 5301 Washington, DC 20590		13. Type of Report and Period Covered Task Order Study Sept. 1994 through March 1995
		14. Sponsoring Agency Code NRD-51
15. Supplementary Notes		

16. Abstract

The increasing sophistication of automotive electronics has prompted NHTSA to investigate the feasibility of using advanced electronics for in-vehicle Intelligent Vehicle Highway Systems(IVHS) . Specifically, OCAR wishes to find the most feasible approach to integrating in-vehicle IVHS safety systems with other in-vehicle electronic systems. Such integration could yield benefits such as reduced cost, increased functionality, and safer, more reliable vehicles. This report investigates the use of off-the-shelf automotive electronic multiplexing and networking standards and electronic bus architectures to achieve this integration. Issues addressed include whether existing standards are adequate to support the required types of interfaces and the anticipated data traffic volumes that such integrated systems would impose, and whether safety and reliability issues have been adequately addressed. A number of hypothetical in-vehicle integrated IVHS safety system architectures are proposed and evaluated against most of the currently known automotive electronic protocol standards.

7. Key Words Intelligent Vehicle Highway Systems, automotive electronics, automotivemulti-plex, automotive networks, in-vehicle safety systems SAE 51850, CAN, automotive electronic standards, automotive control systems		18. Distribution Statement This document is available to the public through the National Technical Information Service Springfield, VA 22161	
9. Security Classif. (of this report) Unclassified	20. Security Classif. (of mis page) Unclassified	21. No. of Pages	22. Price

Form DOT F 1700.7 (8-72) Reporoduction of form and completed page is authorized

TABLE OF CONTENTS

SECTION		PAGE
1	EXECUTIVE SUMMARY	l-l
1.1	TaskOverview	l-l
1.2	Task Methodology	l-l
1.3	Summary of Findings	l-8
1.4	Recommendations for Further Effort	l-10
2	GENERAL NETWORKING CONCEPTS	2-l
2.1	Overview	2-l
2.2	Multiple Access Networks	2-l
2.2.1	Time Division Multiplexing	2-4
2.2.2	Random Access	2-5
2.2.3	Controlled Access	2-6
2.2.4	OS1 Reference Model	2-8
2.2.5	OSI Implementation	2-10
2.2.6	FrameStructure	2-12
2.3	Network Performance Issues	2-14
2.4	Fault Tolerance and Reliability	2-17
3	AUTOMOTIVE PROTOCOLS	3-l
3.1	SAE Protocol Classes	3-l
3.2	SAE Networking Standards	3-3
3.3	OEM Networking Standards	3-5
3.4	Comparison of Protocol Specifications and Performance	3-8
3.4.1	Physical and Logical Layer Specifications	3-8
3.4.2	Physical layer	3-8
3.4.3	Logicallayer	3-11
3.4.4	Message Formats	3-l1
3.4.5	Latency and Throughput	3-14
3.4.6	ISO Fault Tolerance	3-15
4	INDUSTRY PRACTICE	4-l
4.1	Standards Committees and Organizations	4-l
4.2	Networking Standards Usage	4-l
4.3	Manufacturing Practice	4-4
4.4	Enabling Technologies	4-6
4.4.1	Sensors	4-6
4.4.1.1	Class C Sensors	4-6
4.4.1.2	Class A Sensors	4-8

TABLE OF CONTENTS (Continued)

SECTION		PAGE
4.4.1.3	IVHS Sensors	4-8
4.4.2	Actuators	4-9
4.4.2.1	Class CActuators	4-9
4.4.2.2	Class A Actuators	4-9
4.4.2.3	IVHS Actuators	4-9
4.4.3	Control Modules	4-10
4.4.3.1	Design and Functionality	4-10
4.4.3.2	Processors Characteristics	4-10
4.4.3.3	Memory Characteristics	4-10
4.5	Architecture Approaches	4-11
4.5;1	Existing and Near-Term Future Architectures	4-11
4.5.2	Mid-Term Future Architectures	4-11
4.5.3	Long-Term Architectures	4-l 3
4.6	Manufacturing Practice	4-16
4.6.1	Electronic Systems	4-16
4.6.2	Semiconductor Components	4-18
4.6.3	IVHS Systems	4-19
4.6.4	Software Controlled Design, Manufacturing, and Diagnostic Tools	4-20
5	SYSTEM CONCEPTS	5-l
5.1	Existing Vehicle Control Systems	5-l
5.2	IVHS In-Vehicle Safety Systems: Overview and Assumptions	5-13
5.3	IVHS In-Vehicle Safety Systems: System Specifications, Data Flows, and Information Needs	5-19
	INTEGRATION OF IVHS CRASH AVOIDANCE SYSTEMS AND OTHER IN-VEHICLE ELECTRONICS	6-1
6.1	Overview of the Assessment Approach	6-l
6.2	Assumptions	6-l
6.3	Assessmemt Criteria	6-3
6.3.1	Access to Candidate Network Bus	6-4
6.3.2	Support for Information Sharing and Coordinated Control	6-4
6.3.3	Bus Support to Upgrades and Expansion	6-4
6.3.4	Short-Term Message Error Rate, and Error Type/Distribution	6-5
6.3.5	Data/Message Thmughput and Latency	6-5
6.3.6	Network Reliability (Long-Term Failure Rate)	6-6
6.3.7	Cost Factors	6-6

TABLE OF CONTENTS (Continued)

SECTION		PAGE
6.4	Network Scenarios for IVHS Safety System Integration	6-6
6.4.1	Near-Term Scenarios	6-7
6.4.2	Mid-Term Scenarios	6-17
6.4.3	Far-Term Scenarios	6-23
7	ASSESSMENT OF IVHS CRASH AVOIDANCE SYSTEM INTEGRATION	7-l
7.1	Detailed Assessments	7-1
7.1.l	NearTerm	7-l
7.1.1.1	Standalone IVHS Systems	7-1
7.1.1.2	Integrated IVHS Systems	7-9
7.1.2	Mid Term	7-12
7.1.3	FarTerm	7-12
7.2	Summary Evaluations	7-13
7.2.1	NearTerm	7-13
7.2.2	MidTerm	7-14
7.2.3	FarTerm	7-14
7.3	Summary of Study Results	7-15
7.3.1	General Observations.	7-15
7.3.2	Near-Term Applications (0 to 5 Years)	7-16
7.3.3	Mid-Term Applications (5 to 10 Years)	7-16
7.3.4	Far-Term Applications (10 Years and Beyond)	7-16

LIST OF FIGURES

FIGURE		
l-l	Task Overview and Work Flow	l-2
1-2	Approach to the Subtask 3 Assessments	l-4
2-l	Commonly Used Topologies for Computer Buses and Networks	2-2
2-2	OS1 Reference Model Protocol Layers and Functions	2-9
2-3	Frame Structure of a Typical Automotive Networking Protocol	2-13
2-4	End-to-End Timing Budget for a Typical Automotive Network	2-17
3-1	Relationships of Classes A, B, and C Vehicle Communications	3-2
4-l	Overview of SAE Standards Writing Process for Automotive Electrical and Electronic Systems	4-2

TABLE OF CONTENTS (Continued)

FIGURE (Continued)

4-2	Timeline Showing Actual Implementations of In-Vehicle Distributed Networks	4-3
4-3	Typical Existing or Near-Term Future Standalone Control System Architecture	4-12
4-4	Typical Existing or Near-Term Future Class A Architecture	4-12
4-5	Typical Mid-Term Future Class B Network Architecture	4-14
4-6	Possible Far-Term Future Automotive Network Architecture	4-15
4-7	Variation on Far-Term Future Automotive Network Architecture Using Router/Firewall Concept (Network Interface Circuits Omitted for Clarity)	4-15
4-8	Far-Term "All In One" Vehicle Network Architecture	4-17
5-l	Existing Control Systems: Typical Electronic Engine control Unit	5-2
5-2	Existing Control Systems: Typical Anti-Lock Braking System (ABS)	5-3
5-3	Existing Control Systems: Traction Control System Supplementing ABS	5-5
5-4	Existing Control Systems: Ford Hydraulic Variable Assist Steering	5-7
5-5	Existing Control Systems: Mercedes Lateral Stability Control System	5-9
5-6	Existing Control Systems: Toyota Four Wheel Steering System	5-10
5-7	Existing Control Systems: Active Suspension System	5-12
5-8	Network Architecture for the Toyota i-Four Integrated Control System	5-15
5-9	System Specification Worksheet for SA-1	5-20
s-10	Data Flows for SA-1	5-21
5-l 1	Information Needs Worksheet for SA-1	5-22
5-12	System Specification Worksheet for SA-2	5-23
5-13	Information Needs Worksheet for SA-2	5-24
5-14	System Specification Worksheet for SA-3	5-25
5-15	Data Flows for SA-3	5-26
5-16	Information Needs Worksheet for SA-3	5-27
5-17	System Specification Worksheet for SA-4	5-28
5-18	Data Flows for SA-4	5-29
5-19	Information Needs for Worksheet for SA-4	5-30
5-20	System Specification Worksheet for CW-1	5-32
5-21	Data Flows for CW-1	5-33
5-22	Information Needs Worksheet for CW-1	5-34
5-23	System Specification Worksheet and Data Flows for CW-2	5-35
5-24	Information Needs Worksheet for CW-2	5-36
5-25	System Specification Worksheet for CW-4	5-37
5-26	Data Flows for CW-4	5-38

TABLE OF CONTENTS (Continued)

FIGURE (Continued)

5-27	Information Needs Worksheet for CW-4	5-39
5-28	System Specification Worksheet for AC-l	5-40
5-29	DataFlowsforAC-1	5-41
5-30	Information Needs Worksheet for AC-l	5-42
5-31	System Specification Worksheet for AC-2	5-43
5-32	Data Flows for AC-2	5-44
5-33	Information Needs Worksheet for AC-2	5-45
5-34	System Specification Worksheet for CR-2	5-47
5-35	Data Flows for CR-2	5-48
5-36	Information Needs Worksheet for CR-2	549
5-37	System Specification Worksheet for DC-l	5-50
5-38	Data Flows for DC-l	5-51
5-39	Information Needs Worksheet for DC-l	5-52
6-l	Overview of the Approach to the Assessments	6-2
6-2	Assessment Criteria Summary and Driving Network Features	6-3
6-3	System Specification Work Sheet for Integrated Situation Awareness System (ISAS	6-8
6-4	DataFlowsforlSAS	6-9
6-5	Information Needs Work Sheet for Integrated Situation Awareness System	6-10
6-6	System Specification Work Sheet for Integrated Collision Waming System (ICWS)	6-11
6-7	Data Flows for ICWS	6-12
6-8	Information Needs Work Sheet for Integrated Collision Warning System	6-13
6-9	System Specification Work Sheet for Integrated ACN/CDR System	6-14
6-10	Data Flows for Integrated ACN/CDR System	6-15
6-11	Information Needs Work Sheet for Integrated ACN/CDR System	6-16
6-12	System Architecture for Fully Integrated IVHS System	6-18
6-13	Network Needs Summary for the Integrated IVHS System	6-19
6-14	Data Flows for Fully Integrated IVHS System	6-20
6-15	Information Needs Work Sheet for Fully Integrated IVHS System	6-21
6-15	Information Needs Work Sheet for Fully Integrated M-IS System	6-22

TABLE OF CONTENTS (Continued)

LIST OF TABLES

TABLE

1-l	Overview of the Assessment Criteria	1-3
l-2	Summary of Examined Safety Systems	l-5
l-3a	Comparison of CSMA/NDA Protocols for Automotive Applications	l-6
l-3b	Comparison of CSMA/CD, Polling, and Token Passing Protocols for Automotive Applications	1-7
1-4	Summary Assessments of Candidate Automobile Protocols	1-8
2-l	Commonly Used Bus Topologies	2-4
2-2	Physical Layer Implementation Factors	2-l 1
2-3	Characteristics of Media Access Control (MAC) Schemes	2-l 1
3-l	Characteristics of Different Classes of Vehicle Communications	3-2
3-2a	Comparison of CSMA/NDA Protocols for Automotive Applications	3-9
3-2b	Comparison of CSMA/CD Polling, and Token Passing Protocols for Automotive Applications	3-10
3-3	Comparison of Typical Automotive Network Bit Encoding Schemes	3-l 1
3-4	Latency (msec) vs. Network Throughput for Typical Automotive Protocols, Assuming 1 Mbps, 84 Message types/priority Levels, 27 Nodes, 97 Bit Frame Length (4 bytes data), lx 10^{12} Certainty Level	3- 14
3-5	Comparison of IS0 Fault Tolerance Capabilities of Automotive Protocols	3-16
5-l	Sharing of Sensor Information in the Toyota Integrated Chassis Control System.	5-14
5-2	Summary of Network Traffic Loads for the Proposed IVHS in-vehicle safety Systems. Assumes 48 bits of overhead per message	5-16
6-1	Summary of Network Traffic Loads for the Proposed Near-Term Integrated WI-IS In-Vehicle Safety Systems (Assumes 48 Bits of Overhead per Message)	6-17
6-2	Matrix Depicting Joint Utilization of Sensors and Actuators by Proposed IVHS Safety Systems and Other in-Vehicle Systems	6-24
7-1	Evaluations of IVHS Safety Systems Against High Speed CSMA/NDA Protocols	7-2
7-2	Evaluations of IVHS Safety Systems Against 100 kbps to 500 kbps CSMA/NDA Protocols	7-3
7-3	Evaluations of IVHS Safety Systems Against 20 kbps to 50 kbps CSMA/NDA Protocols	7-4

TABLE OF CONTENTS (Continued)

TABLE (Continued)

7-4 Evaluations of IVHS Safety Systems Against Low Speed CSMA/NDA Protocols 7-5
7-5 Evaluations of IVHS Safety Systems Against Low Speed CSMA/CD Protocols . 7-6
7-6 Evaluations of IVHS Safety Systems Against Polling Protocols 7-7
7-7 Evaluations of IVHS Safety Systems Against Token Passing Protocols 7-8
7-8 Evaluations of IVHS Safety Systems Against High Speed CSMA/NDA Protocols 7-10
7-9 Evaluations of Integrated IVHS Safety Against High Speed Token Passing and Polling Protocols 7-11

APPENDICES

Appendix A: Annotated Bibliography . . . . . A-l

ACRONYMS

List of Acronyms . . . . . AC-l

SECTION 1: EXECUTIVE SUMMARY

This section provides a brief overview of the current task as well as a summary of the key findings and recommendations resulting from this effort Further details of the task methodology and findings are contained in later sections,

1.1 TASK OVERVIEW

The purpose of this task was to identify and assess the main features of automotive computer architectures and electronic interfaces which could either facilitate or hinder the deployment of in-vehicle safety-related electronics for Intelligent Vehicle Highway Systems (IVHS). The effort was guided by two goals defined by NHTSA: (1) to enable new and emerging safety-related automotive electronic technologies to be integrated into the frame work of current and future automotive electronic systems; and (2) to help determine steps which may be necessary to ensure that lack of commonality in design and manufacture within the automotive industry does not impede deployment of the new technologies. A key result of the task is a set of engineering assessments which evaluate the status of computer systems and electronic interface standards with regard to the potential for integration of the electronics for IVHS safety-related systems and the electronics for other vehicle systems.

1.2 TASK METHODOLOGY

The task was divided into subtasks as illustrated in Figure l- 1. The three primary subtasks supporting the analyses of this task were as follows:

- Subtask 1: Identification of Automotive Computer Communications Network Architectures (CCNAs).
- Subtask 2: Development of Criteria for Assessing Integration of Safety-Related IVHS Systems.
- Subtask 3: Engineering Assessment of the Alternative CCNAs with Regard to Integration of Safety-Related IVHS Electronics.

To ensure consideration of the full variety of potential automotive CCNAs, Subtask 1 included not only identification of computer systems and electronic interface standards, but also collection of information on current and future automotive practices obtained from manufacturers and technical committees. Also note that Subtask 3 included both initial engineering assessments and further organization of the assessments into summary evaluations suitable for use in defining recommendations relevant to deployment of IVHS safety-related systems. Further details of each of the subtasks are provided below.

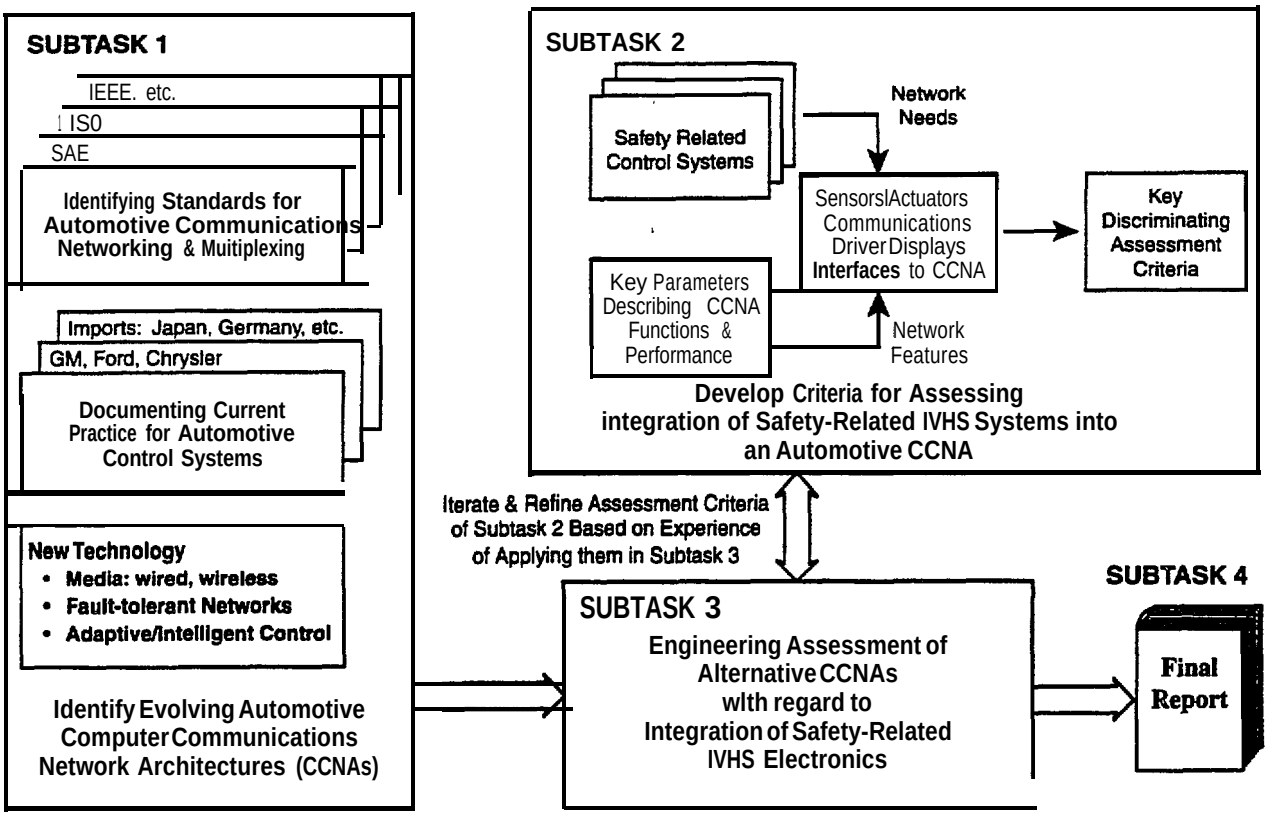

Figure 1-1 Task Overview and Work Flow

Subtask 1: Identification of Automotive Computer Communications Network. Architectures Extensive research was performed to identify relevant technical papers, industry standards, text books, handbooks, and tutorials that dealt with automotive electronics and control systems. Sources of information included:

- The Society of Automotive Engineers (SAE).
- The Institute of Electrical and Electronics Engineers (IEEE).
- The International Standards Organization (ISO).
- Other standards organizations.
- Research and development organizations.
- Automotive manufacturers.

The data provided insight into industry practice and the state-of-the-art in automotive electronics design and manufacturing. A selected annotated bibliography summarizing the information sources examined in Subtask 1 is contained in Appendix A.

Subtask 2: Development of Criteria for Assessimg Integration of Safety-Related IVHS Systems. Assessment criteria were developed to assess the ease of integration of NHS safety-system electronics with the electronics required for the other systems of the vehicle. The focus of the criteria was on comparison of safety system needs to the service features offered by the network buses within the vehicle on-board computer communications network architecture.

Table l-l summarizes the assessment criteria along with the driving bus features that determine performance with respect to each.

Table I-1: Overview of the Assessment Criteria

Assessment Criteria	Description	Driving Features
Bus Access	Support to connection of new interfaces	• Bus media • Number of nodes supported • Implementation using open vs. closed standards
Support for information Sharing and Coordinated Control	Ability to support multiple control units interacting with common sensors and actuators	• Support for broadcast services • Support for data request protocols • Number of message types available • Availability of bus arbitration schemes
Bus Standard Support for Upgrades and Expansion	Bus standard expendability to support new functions and capabilities	• Ability to support new message types • Support for internetworking
Short-Term Message Error Rate/Distribution	Does the network provide adequate error control and error recovery mechanisms	. Error Control: Gydic redundancy checks/parity schemes • Support for "error free" communications protocols
Data/Message Throughput	Ability to network to support message load, meet data delay requirements	• Effective data rate • Delay as a function of load
Network Reliability	Long-term resistance to failure and the associated failure mechanisms including fault tolerance and fault isolation	• Ability to meet ISO Fault Tolerance recommendations for hardware • Software support for fault tolerance and fault isolation
Cost	Factors which influence overall implementation cost	• Media • Processing requirements

The specified criteria permitted objective, standards-based assessments and comparisons of network capabilities that could be readily performed. A detailed discussion of the criteria as well as supporting rationale and a description of their application is provided in Section 6 below.

Subtask 3: Engineering Assessment of the Alternative CCNAs with Regard to Integration of Safety-Related IVHS Electronics. This subtask involved detailed assessment of the ability of me various electronic interface standards identified in Subtask 1 to support integration of IVHS safety-related systems. To perform the subtask, a variety of candidate IVHS safety systems were first defined, then the needs of these safety systems were analyzed. The ability of the various interface standards identified in Subtask 1 to support these safety system needs was then assessed in detail within the context of near-, mid-, and far-term system implementation. Figure l-2 summarizes the approach used in the assessments of this subtask.

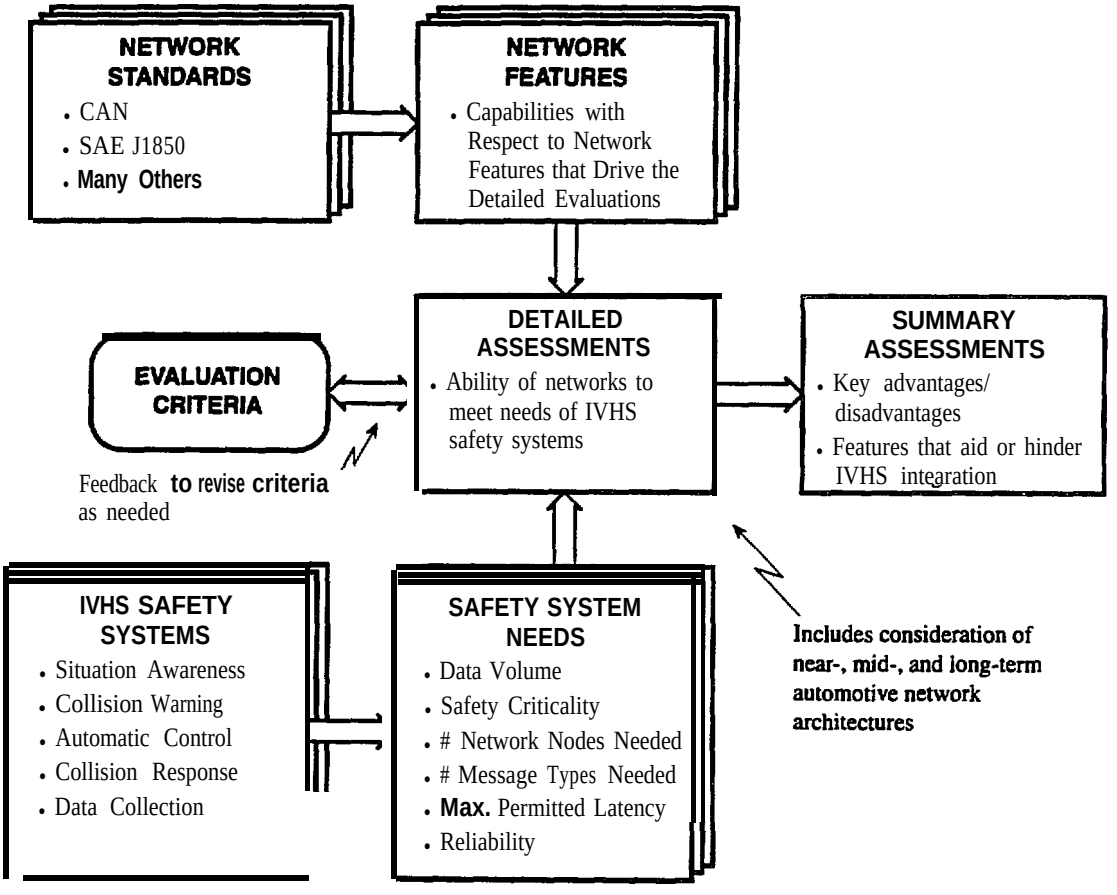

Figure 1-2: Approach to the Subtask 3 Assessments

In coordination with NHTSA, thirteen basic safety systems in five general categories were defined for use in the evaluations of this task. The systems and categories are summarized in Table l-2. While the safety-system categories cover a broad range of safety-system types, emphasis was placed on safety systems for situation awareness (i.e., enhancement of the driver's perception of the road and traffic environment), and collision warning (i.e., systems intended to warn a driver that immediate driver action is required to avoid collision). Most of the systems require both real time and non-real time data types,

Table 1-2: **Summary** *of Examined Safety Systems*

Safety System	Description
Situation Awareness Systems	
SA-1 Proximity Detection System	Monitors driver blind spots for lane changes and low speed backing maneuvers
SA-2 Headway Detection System	Warns driver when speed-appropriate following distances are violated
SA-3 Automobile Diagnostic System	Provides automated monitoring and diagnostics for key safety related systems.
SA-4 Driver Diagnostics	Monitors driver alertness, sobriety, and performance.
Collision Warning Systems	
CW-1 Road Departure Warning	Warns driver when proper lane discipline is not maintained.
CW-2 Headway Detection System	Monitors following distance and closing speed. Warns driver when braking/swerving required.
CW-3 Intersection Crash Avoidance	Warns driver of immediate intersection hazards. May include out-of-vehicle components.
CW-4 Lane Changing and Merging	Warns driver of hazards impacting ability to change lanes or merge.
Automatic Control Systems	
AC-1 Autonomous Cruise Control	Automatically maintains correct vehicle speed, taking into account current operating conditions.
AC-2 Control for Collision Avoidance	Provides automated control (steering or braking) capability for the automobile to avoid collisions.
Collision Response Systems	
CR-1 Pre-Collision Preparation	Implements pre-collision functions such as air-bag deployment or seat belt tensioning.
CR-2 Automated Accident Reporting	Relays key accident information such as vehicle locations and number of occupants.
Data Collection System	
DC-1Data Collection for Post-Collision Analysis	Continually stores key vehicle parameters for post-collision analysis.

with the automatic control systems generally requiring greater amounts of real time data than the other safety systems. Details of the safety systems and safety-system categories are provided in Section 5 of this report.

The major automotive networking standards identified in Subtask 1 were characterized by key networking performance and implementation factors. These factors were based on the list of driving network features included in Table l-l above. A summary of this characterization is presented in Table l-3. Note from the exhibit that a large variety of factors influence the network assessments of this task. For example, achieved network data rate, even in a lightly loaded network, is a function of several parameters including:

Table 1-3a: Comparison of CSMA/NDA Protocols for Automotive Applications

Standards / Parameters	Furukawa	ABUS	CAN	DDB	VAN	PALM-NET	Toyota i-Four	SAE J1850	SCP	C2D	DLCS
Physical Layer Bit Encoding	NRZ w/ Bit Stuffing	NRZ	NRZ W/ Bit Stuffing	PWM	Man-Chester	PWM/ NRZ	PWM	VPW/ PWM	PWM	NRZ	VPW
Media	STP1	1 wire	TP/FO	TP	TP	TP/STP	STP	1 Wire/ TP	-	-	-
Bit Rate	1 Mbps	500 kbps	20 kbps/ 1Mbps	# 1 Mbps	Variable	20/125 kbps 1 Mbps	41.6 kbps	10 kbps/ 41.6 kbps	41.6 kbps	7.8 kbps	10 kbps
Number of Nodes	30	30	30	50	16	24/32/16	32	-	32	-	32
ISO Fault Tol.	9	1	7	1	6	7	4	4	7	1	1
Logical Layer											
Error Control	15 bit CRC	SelfMo n-itoring	15 bit CRC	Parity	15 bit FCS	8/16 bit CRC	8 bit CRC	8 bit CRC	8 bit CRC	8 bit CRC	8 bit CRC
Data Field	#8 bytes	2 bytes	#8 bytes	2-128 bytes	#8 bytes	4/4/8 bytes	1-8 bytes	#8 bytes	1-7 bytes	8 to N bits 4	0-56 bits
In-Message Ack	Yes	No	Yes	No	Yes	Yes	Yes	Yes	Yes	No	No
Source Addresses	-	-	-	-	-	-	-	8 bits	8 bits	-	8 bits
Priorities	-	-	-	-	-	8 bits	8 bits	3 bits	8 bits 3	8 bits 3	16 bits
Message Types	11 bits	11 bits	11 bits	-	12 bits	8 bits	8 bits	-	-	-	16 bits
Other Overhead	21 bits	16 bits	21 bits	34 bits	8 bits	43 bits	14 bits	18 bits	21 bits	24+2N	4.4 bits
Total Frame Size	47 to 111 bits	31 bits	47 to 111 bits	# 290 bits	35-99 bits	99/138 bits	# 101 bits	# 101 bits	53-101 bits	40-(40+2N)	44.4-100.4 bits
Effect. Data Rate (%kbps)	31-62%/310-620	74%/370	31-62%/310-620	# 75%/750	39-69% Variable	34/52% 6.8-442	30-61%/ 12.5-25	37-54%/15-22.6	51-67%/ 21-28	$34% 2.7	6175% /6-7.5
Buffer Delay (msec)	<0.22	<0.12	<0.22	.03-.5	.07-.2	.2-13.8	2.2-4.9	2.2-4.9	2.5-4.8	10-100	8.9-20

Notes

1. STP = Shielded twisted pair
   FO = Fiber optic
   TP = Twisted pair
   VPW = Variable Pulse Width
   " _ " = Indicates no specification

   NRZ = Non-return to zero
   PWM = Pulse width modulation
   CSMA = Carrier sense multiple access
   NDA = Non-destructive arbitration

2. Effective data rate is the percentage of bits in a packet that are used by the application layer; excludes address priority, CRC, and other control fields
3. Combines priorities with message types
4. N is implementation dependent

Tab/e 1-3b Comparison of CSMA/CD, Polling, and Token Passing Protocols for Automotive Applications

Parameter \ Standard	ACP	MICS	AUTOLAN	Toyota Token Bus	GM Token Slot
Physical Layer					
Bit Encoding	Differen-tial Volt-age	PWM	Alternate Pulse Inversion	NRZ w/ Bit Stuffing	NRZ w/ Bit Stuffing
Media	TP	1 Wire	Dual TP	–	TP/FO
Bit Rate	9.6 kbps	6.7 kbps	4 Mbps	250 kbps	2 Mbps
Bus Length	40 m	–	40 m	–	30 m typ.
Number of Nodes	20	–	127	16	32
ISO Fault Tol.	5	1	1	2	1
Logical Layer					
Access Method	CSMA	CSMA	Polling	Token	Token
Arbitration	Retry	Retry			
Error Control	8 bit CRC	4 bit CRC	7 bit CRC	8 bit CRC	16 bit CRC
Data Field	0-6 bytes	12 bits	2 bytes	2 bytes	≤ 256 bytes
In-Message Ack	Yes	No	No	No	Yes
Source Addresses	7 bits	–	7 bits	4 bits	–
Prioritites	2 bits	–	–	–	–
Message Types	–	–	–	7 bits	16 bits
Other Overhead	31 bits	4 bits	2 bits	9 bits	≤25 bits
Total Frame Size	6-12 bytes	20 bits	33 bits	44 or 13 bits	≤2123 bits
Effect. Data Rate (%/kbps)	≤ 50%/ <4.8	60 %/ 4	48%/ 1.92 M	0 or 52%/ 130	Variable ca. 1M
Buffer Delay (msec)	10-20	6	0.02	0.35	.08-2.1

Notes

1. STP = Shielded twisted pair
   FO = Fiber optic
   TP = Twisted pair
   VPW = Variable Pulse Width
   '-" indicates no specification

NRZ = Non-return to zero
PWM = Pulse width modulation
CSMA = Carrier sense multiple access
NDA = Non=destructive arbitration

2. Effective data rate is the percentage of bits in a packet that are used by the application layer; excludes address, priority, C RC, and other control fields
3. Combines priorities with message types

bit rate; overhead for error control, in message acknowledgments, or message addressing; and details of the access method used in the multiplexing protocol.

1.3 SUMMARY OF FINDINGS

The purpose of this task was to identify and assess the main features of automotive computer architectures and electronic interfaces which would either facilitate or hinder the deployment of in-vehicle safety-related electronics for IVHS. Table 1-4 provides a summary of the detailed evaluations performed for each of the network standards examined.

Table 1-4: Summary Assessments of Candidate Automobile Protocols

+ = more than adequate OK = adequate - = not recommended

Standard	Summary Assessment Categories		
	Suitability for driv-et-/passenger conve-nience functions	Suitability for interprocessor in-formatlon sharing (non-safety critical)	Suitability for real-time control
Furukawa	+	+	OK
ABUS	+	+	OK
CAN	+	+	OK
DDB	+	+	OK
VAN	+	+	OK
PALMNET	+	+	OK
i-Four	+	+	
SAEJ 1850	+	+	
SCP	+	+	
CCD	OK		
DLCS	OK		
ACP	OK		
MICS	OK		
AUTOPLAN	+	+	-
Toyota Token Bus	+	+	
GM Token Slot	+	+	

Currently defined network standards do provide a robust architecture for integration of some IVHS safety systems. In particular:

1. Existing network standards provide a large variety of multiplexing alternatives for implementation of a shared data system. These standards are reasonably well optimized for the automotive environment. Integration of IVHS safety systems into the automotive computer communications network architecture is greatly facilitated by the information sharing and control capabilities of existing network standards.

2. Performance of systems that are based on existing **network** standards appears to be adequate for many of the safety systems and scenarios considered in this task. In particular, for near- and mid-term implementation scenarios, in which network loading is expected to be light, networks based on high-speed CAN or similar standards have throughput and latency adequate for most IVHS safety systems.

While the network standards examined in this task offer many features that will help deployment of IVHS safety-related systems, there are significant shortcomings and concerns that were identified in this task. In particular:

3. Most current network standards are overly flexible in the range of variation permitted in their implementation. Furthermore, most do not fully specify the physical layer. In particular, a variety of mutually incompatible implementations of networks related to the SAE J1850 standard currently exist. Although some flexibility in network standards is desirable to permit use of the network in a variety of differing applications, the incompatibility of networks designed to essentially the same standard could significantly hinder near-term integration of IVHS safety systems. Open standards that drive different manufacturers to mutually compatible implementations could significantly benefit integration of safety **systems as** described below.

4. Message latency in many of the examined networks is not adequate for critical, real time IVHS safety-related functions in a fully loaded network environment. The upper limit for real time message traffic in even the highest bandwidth standards is believed to be in the vicinity of 25 kbps. In the mid- and far-term architecture scenarios, this is not likely to be adequate. Additionally, network latency performance under high traffic load levels has not yet been fully characterized for most of the examined networks. These latency issues need to be resolved before a network is used to support critical IVHS safety systems.

5. The issues of fault tolerance and fault isolation have not been fully addressed by many of the examined candidate networks. While IS0 standards for network responses to bus faults exist, the examined networks do not consistently meet these standards. Additionally, standard responses to network node failures have yet to be defined. This issue has greatest impact on potential integration of safety-critical IVHS systems into the automotive CCNA. The CAN network standard addresses the issue of hardware fault tolerance to a greater degree man most of the other examined network types. Software support to fault tolerance/fault isolation functions is minimal at this time.

6. Internetworking standards need to be defined. As the automotive network architecture evolves to ever greater levels of complexity, it will become more and more likely that multiple buses of potentially differing types will need to exchange information. It is not reasonable to expect a single network bus to meet the needs of all systems within an automobile; instead, a variety of automotive

buses can be expected to be present, In cases where information exchanges between buses are required, gateways must be provided Automotive standards for exchanging information between network buses need to be created in order to assure that throughput and reliability requirements available within a single network are not sacrificed when communication occurs between networks.

1.4 RECOMMENDATIONS FOR FURTHER EFFORT

This study identified several areas where additional effort is needed to enable a smooth transition to highly integrated, networked in-vehicle safety systems.

Network Simulation and Prototyping

There are currently few detailed analyses available concerning performance of the various network buses when used to support existing m-vehicle systems or planned IVHS safety systems. Adding a new safety system to a vehicle carries significant cost and safety risks, and requires the assessment of many alternative implementations. Because of the volume of network message traffic and the randomness of key events such as bit errors, bus contention, and contention resolution, a closed form analytical approach is usually not feasible. The use of computer-aided simulation and hardware/software prototyping can significantly reduce design and implementation risks. Because network simulation and prototyping could greatly facilitate effective government policy decisions, NHTSA should promote development of a simulation capability relevant to detailed evaluation of the automotive network standards under realistic operating conditions. Such a simulation capability could provide (otherwise unavailable) information on network throughput and latency relevant to integration of specific safety systems and safety system standards under consideration.

There is currently a large number of similar competing network protocol standards. While they have many similarities, most are not directly inter-operable. Given the competition in the automotive industry and the shortness of product development schedules, this situation is not likely to change in the near future. Conversely, the government does not wish to fund IVHS development efforts that will not gain commercial acceptance due to interoperability and integration limitations. This suggests the need for a single, or limited suite of, broadly accepted bus standards. As an analogy, the desktop computer industry has seen explosive growth and innovation, while the performance-to-cost ratio has continued to improve. These trends are largely traceable to the existence of a few open interface and networking standards that allow third party developers to rapidly introduce innovative technologies that can be readily integrated with existing systems. A similar capability in the automotive industry could yield similar benefits. In particular, the rapid innovation made possible by a broadly accepted set of network standards could help to alleviate the concerns regarding network latency outlined above. NHTSA should take steps to assure that network bus practice within the automotive industry evolves to a small set of open, standardized interfaces rather than the one-standard-per OEM approach currently practiced by industry.

"Plug and Play" Concepts Relevant to the Automotive Network Architecture

The concept of "plug and play" (i.e., the ability to attach new external equipment of a standard design to an existing system without modification) could offer significant advantages in integration of IVHS safety-related systems. As bus standards provide for an individual network bus, standards for connection of external equipment to the full automotive architecture could lead to significant economies and associated rapid innovation. In particular, such "plug and play" standards would open the door to small, innovative developers to quickly introduce new technologies for IVHS safety systems that could be easily integrated with existing vehicles.

Implementation of such concepts would require the adoption of some type of global interface standard (or at most a few standards), similar to what currently exists in the desktop computing industry. In addition to the basic issues of physical and logical interfaces, the standards would need to recognize different classes of data based on safety criticality, extent of interaction with other vehicle systems, fault tolerance, and latency requirements. Standard physical media, media access schemes, and physical connections would need to be specified. NHTSA could benefit significantly from such standards and should take the lead in implementing and coordinating the processes by which such standards are created.

Internetworklng within the Automotive Network Architecture

As an extension of the plug and play concept, an open architecture usually involves some element of internetworking. This concept allows large, potentially cumbersome networks to be partitioned into smaller networks (called subnets) based on criteria such as traffic volumes and flows, node and message priority, timing requirements, and safety criticality. The performance of each subnet can be optimized with respect to some subset of requirements, while still allowing all nodes in the system to exchange data With the proper software installed, intemetworking devices can also respond to other protocol suites, allowing heterogeneous devices to coexist on the same network.

As an example, it may be desirable to place all control modules in a vehicle on a network. This would allow powerful diagnostic and status monitoring capability, and allow sensors and actuators to be shared by different processors. However, because of network performance limitations or safety concerns, it may be desirable to place a "firewall" between critical, real time data such as throttle control or ABS wheel speed, and less critical data such as climate control or seat positioning. An intemetworking device could allow status information to flow freely through the network, while blocking data not needed by a particular subsystem. For example, climate control data could be blocked from the ABS, thereby avoiding overloading the ABS subnet or issuing inadvertent commands to the ABS from another control module.

Definition of standards that permit low latency, fault tolerant, communications among automobile subnetworks could significantly benefit integration of critical safety-related systems that require such capabilities. Again NHTSA has the opportunity to take the lead in defining and promoting network

standards that could significantly benefit automotive networking and integration of IVHS safety-related systems.

SECTION 2: GENERAL NETWORKING CONCEPTS

2.1 OVERVIEW

The analysis performed under this study is grounded in the fundamental concepts of data communications networking and multiple access schemes. There are numerous excellent technical references on data communications and networking. The following section presents a brief overview of the subject, tailored toward automotive applications.

2.2 MULTIPLE ACCESS NETWORKS

Bus Topologies

1. A wide range of commiunications systems have been developed or proposed that allow multiple nodes to time-share access to a common communications circuit, or small group of circuits. Such an arrangement is generically referred to as a network. When the distance between nodes is relatively small, such as in an automobile, the network is often referred to as a "bus". The nodes have a direct physical connection to the network and direct physical access to the data Because of the short span of wire between each node, the circuit acts as a bus, conveying blocks of data around the various "slots" or seats on the bus.

2. The fundamental issues that all data communication networks must address are:

   a. Allowing all users of the system (referred to as "nodes") the ability to communicate with each other.

   b. Minimizing delay in routing data packets across the network.

   c. Avoiding loss or corruption of data.

   d. Satisfying implementation constraints such as simplicity, reliability, and cost effectiveness.

3. Conceptually, the simplest approach to data communication is to give each node a dedicated point-to-point connection to each other node. This topology is not really a network but a collection of dedicated point-to-point links. This approach is rarely used because of the high cost, underutilized capacity, and proliferation of wiring and communication interface devices. To reduce cost and improve capacity utilization, some type of multiple access scheme is used, based on one of several possible bus topologies, including (see Figure 2-l):

   a. Single shared circuit.

   b. Shared circuit with branches and splices (tree).

   c. Centrally hubbed circuits (star).

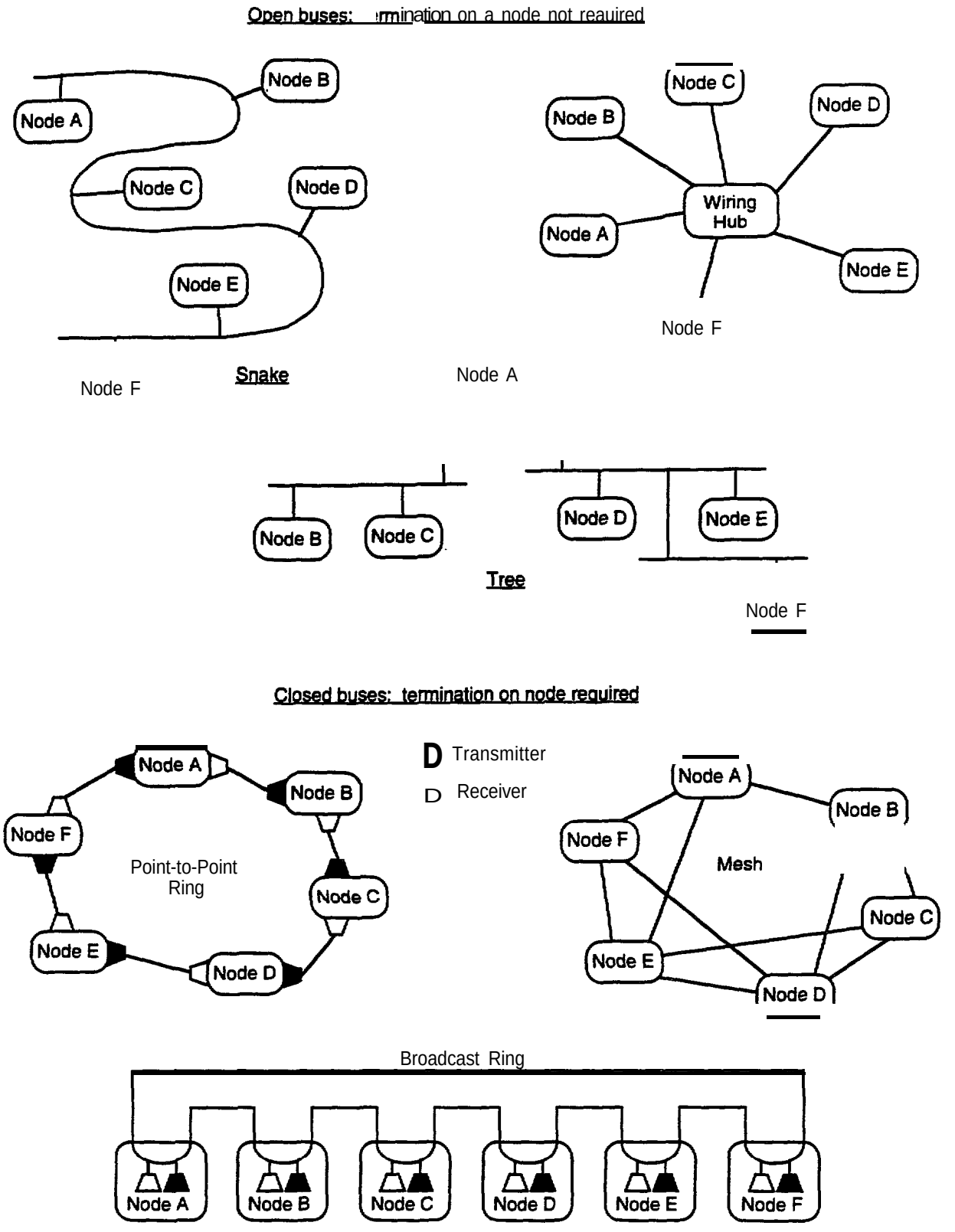

Figure 2-1 Common/y Used Topologies* for *Computer Buses and Networks

d. Mesh.

e. Ring.

f. Hybrid forms.

4. For applications such as automobiles, where cost, flexibility, simplicity, and reliability are major drivers, the mesh and hybrid forms are rarely used. They are less flexible, have somewhat costly and complex wiring schemes, and usually require routers and other devices to implement muting algorithms or filter out duplicate messages. This report therefore focuses on the single shared' circuit (with its variants, the tree and star) and ring topologies.

5. Physically, the bus may be a concentrated grouping of cross-connected electrical terminations, or it may be a lengthy run of cable, with nodes spliced into it at various intervals along its length. Data is transmitted sequentially, bit by bit, over the shared cable or connectors. The cable may run in a "snake" pattern, traversing point-to-point (possibly with branches resembling a tree) between randomly located nodes, or multiple cables may radiate outward from a central connection point or hub ("star" topology), or the cable may form a closed ring, with data packets circulating around the ring either uni-directionally (point-to-point ring) or bi-directionally (broadcast ring). These topologies are used to construct simple, inexpensive, richly connected, flexible communications networks.

6. The main distinctions in bus topologies are whether the bus is electrically open, as in the star, snake, and tree topologies, or whether it is closed, as in the ring and mesh. These two categories are summarized in Table 2-l. In the open bus, a node transmits and receives over the same cable; new nodes are added by splicing, branching, or extending the cable. Cables may terminate at a node or with a simple electrical impedance (usually a resistor). Signals on the bus usually propagate to all nodes (broadcast). In some cases it is desirable to connect the nodes to an internetworking device (e.g., bridge, router) so that point-to-point or subnet addressing is possible.

7. In the ring bus, signalling may be either point-to-point or broadcast. In point-to-point rings, a node transmits over one cable to a neighboring node, and receives over another cable from its other neighboring node. Signals circulate in one direction around the ring, from one physical address to the next. In broadcast rings, both the data transmitter and receiver are connected to the same cable. Signals can circulate the ring in both directions, and every node is capable of monitoring every transmission. In either case new nodes are added by bridging between two neighboring nodes to maintain electrical continuity. Hubs can also be used with ring or mesh topologies by combining both sets of bus access cables into a single cable sheath and connector.

Access Control

1. The principal implementation problem with bus architectures is controlling access to the bus so that multiple nodes do not transmit their data simultaneously and cause destructive interference. This requires a communications protocol, or set of rules, usually implemented through a combination of electronic hardware and software resident in each of the nodes. Most protocols attempt to optimize a subset of the following objectives:

a. Allow each node equitable access to the bus for sending and receiving messages.

Table 2-1: Commonly Used Bus Topologies

Bus Category	Forms	Characteristics
Open Topology	• Single shared circuit (snake) • Branching circuit (tree or spine) • Centrally hubbed circuits (star)	• Circuits may or may not terminate at a node • Add new nodes by spicing into circuit or adding new branch • One circuit carries both send and receive data • Usually broadcast signalling; message filtering possible with intemetworking devices • Hub can perform packet switching, circuit switching, message filtering
Closed Topology	• Ring • Mesh	• Circuits terminate at a node • Add new nodes by bridging between two adjacent nodes • May be separate circuits for send and receive • May use point-to-point signalling or broadcast • Can also be hubbed

b. Minimize protocol processing complexity and delay.

c. Assure each node a known or bounded transmission delay for any given message.

d. Prevent loss or conuption of data.

e. Anticipate and respond appropriately to electrical and logical faults.

f. Assure each node a certain data throughput rate.

g. Utilize the bus transmission capacity efficiently.

h. Enforce security and privacy restrictions when needed.

2. To some extent the above requirements are contradictory. For example, the need for simplicity and low processing burden is opposed by the need for robust error control and fault tolerance. Also, it is difficult to achieve both low latency and high throughput simultaneously. For any given application, these objectives must be prioritized and traded off against each other. It is this ranking of priorities that governs the selection of a networking protocol for a given application.

2.2.1 Time Dlvision Multiplexing

A widely used variation on dedicated connections is to employ time division multiplexing, such as in commercial telephone systems. The star bus topology is used to connect clusters of nodes to a device

known as a multiplexer. The multiplexer continuously interleaves small blocks of data ("frames") from the local transmitting nodes according to some predetermined timing plan. It transmits the composite bit stream serially over a high bandwidth circuit to the distant end, where a similar device de-interleaves the frames and routes them to the local receiving nodes. This approach is used when traffic patterns are stable, predictable, and relatively uniform over time, data is continuous and real time in nature (e.g., audio and video), and end users tend to be grouped into widely separated clusters. However, in most automotive applications, traffic patterns tend to be random and non-unifonu, timing requirements vary widely, and node locations may be randomly dispersed and in close physical proximity. Such systems are not well-matched to synchronous multiplexing.

2.2.2 Random Access

1. Random access schemes are widely used with open bus topologies. This includes the well-known Ethernet office computing network, and most current automotive networks. They are appropriate when network traffic is bursty and variable over time, multiple nodes need access to the same data, nodes are in close physical proximity, and there is need for simple, low cost communications. These requirements are a close match to the automotive environment. Rather than relying on dedicated connections between nodes or dedicated transmission time slots, random access protocols depend on all nodes being able to monitor all transmissions on the bus.

2. In random access, nodes wishing to transmit data must monitor activity on the bus until an idle period is detected, then attempt to transmit during this period. This process is referred to as Carrier Sense Multiple Access (CSMA). The physical topology of the bus therefore determines whether random access can be used: the signal must be able to propagate to all nodes within a short, predetermined time interval known as the arbitration period. For efficient bus utilization and low cost, broadcast is the best method for reaching all nodes within the arbitration period, thus the open bus or broadcast ring are usually chosen for random access protocols. Repeaters may be placed at various locations in the network to boost signal strength or clean up distorted signals, but the timing constraints of the arbitration period must still be satisfied.

3. The main difficulty with random access is that multiple nodes may attempt to seize the bus during the same arbitration period. To prevent destructive interference between the contending nodes, some form of contention arbitration strategy is needed. The arbitration scheme significantly affects network performance because it determines whether collisions are allowed (collisions waste transmission slots), and how long a message must wait before another transmission attempt is made. Their are numerous arbitration schemes for random access protocols. Whether a node wins the contention may be purely random, or prioritized based on the transmit node's address or message type. The most widely used arbitration schemes are Carrier Detect (CD) with random backoff (Ethernet), and Non-Destructive Arbitration (NDA).

4. In Ethernet, a transmitting node continues to monitor the bus as it transmits. If the data received from the bus agrees with the data in its transmit buffer, it assumes there is no collision with a contending node and continues to transmit. If there is disagreement, it assumes that a collision has occurred and ceases its transmission. It then waits for a random period of time and attempts to retransmit the frame. This is a simple protocol that is inexpensive to implement and can be run at high clock speeds. However, during moderately busy periods, collisions occur frequently, and frames may encounter excessive queueing delays waiting to be retransmitted. Also, the entire initial

packet transmission period is wasted, reducing throughput efficiency. The retransmitted packets may also experience collisions, further reducing throughput and increasing latency. There is no upper limit on latency either, since retransmitted packets may continue to experience collisions. This situation is not tolerable for applications where timely delivery of data is essential, or network utilization is heavy.

5. In NDA, nodes wishing to transmit wait for an idle period on the bus, as in Ethernet. Messages may only be sent after a specified minimum inter-frame separation has been detected, indicating that the previous transmitting node has completed its transmission. Messages begin with a priority field, which may be related to the node address, node type, or message type. A node attempting to transmit continues to monitor the bus on a bit-by-bit basis, rather than a packet basis as in Ethernet. If there is no contention during the first bit period, then that node retains control of the bus. If there is contention during the first bit period, the node(s) having the lower priority bit relinquishes the bus and waits for the next idle period, while the higher priority node(s) continues to transmit. This process continues for all bit periods in the priority field. In this way, the higher priority message continues to be sent, without requiring a retransmission and wasting the transmit slot. This results in efficient bandwidth utilization, and latency becomes a function of message priority. High priority messages are guaranteed low latency, even under heavy network loading. The lowest priority messages will experience increasing latency as network loading increases.

6. CSMA/NDA is a simple and inexpensive protocol to implement, and is widely used in automotive applications. It does however have some significant limitations, such as:

   a. Variation of latency with message priority. A proposed design must be thoroughly simulated to ensure that the latency bounds for a given message priority level are acceptable.

   b. Data rate limitations. The clock speed of the bus is limited; the maximum round trip signal propagation delay through the network must be considerably less than the duration of one bit, so that each node can conduct bit-wise arbitration unambiguously.

   c. Synchronization. The randomness of transmission attempts, lack of a master node, and the collisions that can occur during the arbitration period make it difficult to synchronize the receiving node to the data This requires receivers to oversample the bus voltage to make bit decisions, rather than relying on edge transitions. Receiver clocks must be many times faster than the nominal bit rate on the bus (a factor of seven is typical).

   d. Electromagnetic interference. Depending on the wiring media, voltage rise and fall times on the bus may need to be relatively long in order to prevent excessive RF emissions. Clock speeds are typically limited to 1 Mbps in automotive CSMA/NDA systems using shielded cable. Unshielded systems are limited to around 40 kbps.

2.2.3 Controlled Access

1. In controlled access schemes (sometimes referred to as round-robin), nodes do not contend with each other for transmission slots as in random access. Transmission time slots are assigned, either by a master node using a polling scheme, or by passing a “token” around the network so that only the node possessing the token has permission to transmit. The poll or token may be broadcast to all nodes, or passed sequentially over point-to-point connections. Broadcasting is more efficient and can be used on open or closed bus topologies.

2. In polling protocols, one node is designated as the master. The master sends out a query packet to each node according to a predetermined sequence. Nodes then have a specified time slot in which to begin transmitting, otherwise the next node is polled. Alternatively, groups of nodes may be synchronized to a single poll frame to reduce polling overhead. Polling avoids packet collisions, but requires a dedicated master node and wastes bandwidth on polling. The General Instruments AUTOLAN protocol is the only automotive polling protocol currently in use.

3. Token passing buses do not require a full time master node or polling frames. A fixed bit sequence or token circulates around the bus from one address to the next (in a broadcast bus), or from one physical node location to the next (in a point-to-point system). The token may be a separate type of frame or a shortened version of a data frame. The token generally contains the address of either the most recent node to transmit, or the next node having permission to transmit. If the target node has data to send, it increments the address in the token, and appends the data field and other needed overhead bits to the packet. If it has no data to send, it simply increments the address and rebroadcasts the token without any data, or in some schemes, ignores the token and allows it to pass unaltered. General Motors, Delco, and Toyota currently have token passing protocols.

4. Token passing access schemes make relatively efficient use of bandwidth (especially under heavy network utilization) and place a known, relatively low upper bound on latency. Maximum latency can be easily calculated from the number of nodes, frame size, and data rate. Token passing also places no limit on network size or data rate, since there is no arbitration period. However, it may be difficult to guarantee very low latencies, since the delay in waiting for the next token can be as long as N full frames (N is the number of nodes on the network), plus signal propagation delay. This may place a practical limit on the number of nodes, since access to the token may be only once every N slots as a worst case. An alternative is to assign multiple logical addresses to a node, based its relative priority or traffic density. For example, a high priority node can be given more slots (more addresses), a longer time slot in which to respond to a token, or the ability to preempt a transmission in progress by starting a new token.

5. It is important to understand the distinction between physical addresses and logical addresses in a token passing network. In a point-to-point ring, the token passes sequentially through the network from one physical address to the next. However, the order in which the token is taken may be entirely different. The token is taken based on address priority; addresses are ranked in priority according to the binary word value, with the "all zero" address usually having highest priority. The ordering of addresses may or may not correspond to the ordering of physical addresses. It is also possible for one physical address to have multiple logical addresses, either in a contiguous block or distributed throughout the address space.

Protocol Implementation

For a protocol to function properly, each node in the network must be capable of conforming to the rules of the protocol. Each node must contain the prescribed combination of interface hardware, binary logic, and software needed to be recognized by other nodes and to in turn recognize other nodes. A useful device for understanding protocol implementations is the ISO seven layer reference model.

2.2.4 OSI Reference Model

1. The IS0 Open System Interconnection (OSI) seven-layer model is widely used to describe and understand network protocols. It organizes the data communications process into seven discrete functional areas or layers.. Information passes up and down through these layers in a fixed sequence, and each layer manipulates the data in some fashion that enhances the accuracy, timeliness, or reliability of the data flow. Figure 2-2 depicts these layers and the functions that they perform.

   a. Physical layer. The first layer of the OSI model is the physical layer. It contains the actual physical and electrical connections that form the network. It is characterized mechanically by wires, connectors, and interface hardware, and electrically be impedance levels, current drive, and voltage waveforms. All communication circuits require a fully specified physical layer.

   b. Data link layer. The second layer, the data link layer, provides error control and data flow control over the network. It enforces the rules for media access, segments the data into optimally sized frames or packets, performs error detection, packet addressing, and acknowledgement, and maintains the correct sequencing and integrity of the data frames. The data link layer is often partitioned into two layers: a media access layer, and a flow control layer. The media access control (MAC) monitors the bus for idle periods (or tokens), performs error checking functions, and arbitrates contention with other nodes. The flow control layer segments the data into frames, stores the frames in buffers until they are no longer needed, ensures that frames are properly addressed and sequenced, and appends flow control fields to the data field.

   c. Network layer. The network layer is used to enable the data packets to be independent of the transmission system. For example, if the data packet must traverse some intermediate communication system on the way to its final destination, the network layer handles the necessary connection, formatting, packetizing, and addressing rules needed to traverse the intermediate system. The existence of this intermediate system then becomes transparent to the data packets and the data link control software. This layer is not generally used in automotive applications.

   d. Transport layer The transport layer provides the logical connection between the host computer and the data transmission process. It assembles the data frames from the data link layer into the form recognized by the host computer, and identifies any deficiencies in the data. It notifies the host of any problems in the data transmission system, and acts as a buffer between application layer data and the packetized link layer data. It enables the host computer to be totally independent of the data transmission system. The transport layer is not generally used in automotive applications.

   e. Session layer. Layer five, the session layer, provides the control structure that allows applications software residing on different nodes to communicate with each other. This is generally in the form of "sessions", which are established, managed, and terminated by the session layer software. A session can be thought of as a dialog between two applications, independent of the data transmission system; the session layer is the inter-application protocol. The session layer is not currently used in automotive protocols.

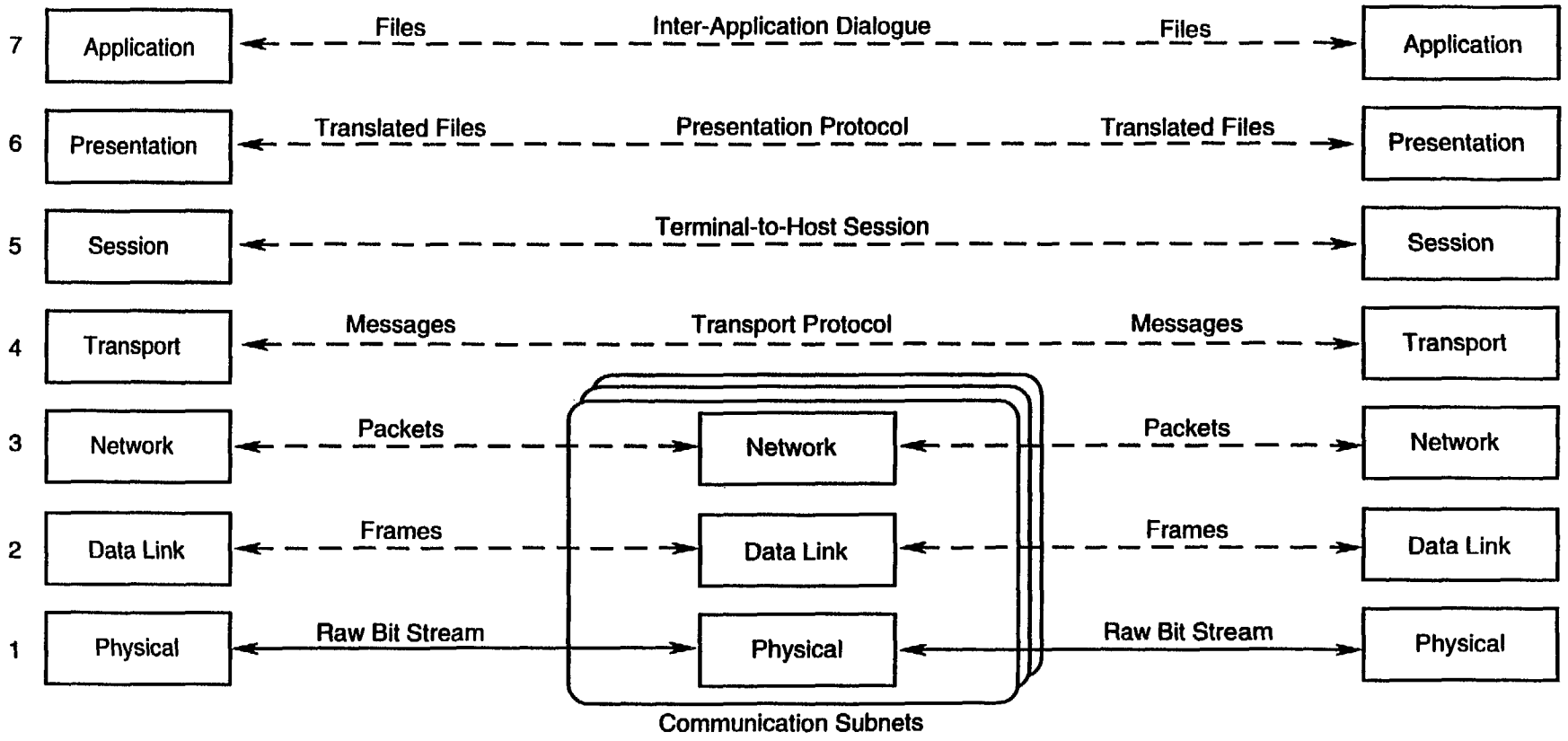

Figure 2-2: OSI Reference Model Protocol Layers and Functions

f. Presentation layer. The presentation layer allows heterogenous applications to exchange data, independent of command syntax or data format. ln effect, it serves as a translator between applications that encode their data differently. This layer is not generally used in automotive protocols.

g. Application layer. The seventh and topmost layer is called the application layer. It comprises, in essence, the user-oriented software programs resident in the host computer. These programs perform the top level information processing functions that are visible to the system users. In practice, these applications themselves may be layered so that the routines that send and receive data to and from external applications are mostly transparent to the end user. In most cases, a host computer will execute a separate communications program, which may have a direct interface with a human user, or logical interfaces to other applications programs resident in the host. An application only needs an interface to the presentation and session layers to communicate with an external system. In commercial systems, an integrated suite of protocol software is usually marketed separately from the user applications, although the protocol suite must be designed to interface with specific applications. In most automotive applications, the data link layer delivers data packets directly to the application layer.

2.2.5 OSI Implementation

1. The main drawbacks to implementing the full seven layer OS1 stack is the processing burden it imposes, with a resulting potential for delays and errors, and increased cost and complexity. OS1 provides a useful model for discussing and understanding data communications, but is rarely implemented in its entirety. Furthermore, the intermediate layers (3 through 6) perform functions that are not generally needed in automobiles, such as intemetworking, user sessions, and data reformatting. For these reasons, the intermediate layers of OS1 are rarely used in automotive applications.

2. Physical layer implementation is mostly a compromise between bandwidth, noise immunity, reliability, and cost. Media such as coaxial cable and fiber optic cable provide good noise immunity, some fault tolerance, and large bandwidth, but are more costly. Single wire buses are inexpensive and flexible, but are less reliable and more vulnerable to noise and voltage offsets. Shielded twisted pair wiring is a frequently used compromise for automotive and general purpose networking. These considerations are summarized in Table 2-2.

3. At the data Iink layer, it is the MAC that most affects data throughput and message latency. Since latency and throughput tend to counteract each other, some type of compromise is needed. For automotive use, latency needs may vary from real time control to non-time critical status reporting. Network loading may range from uniform, high bandwidth to bursty, low bandwidth. Therefore, no single MAC scheme is optimal for all applications. The characteristics of several widely used MACs are shown in Table 2-3.

4. Automotive protocols do not yet employ a network layer since there has not yet been a need for intemehvorking. This may change in the future as automotive networks become larger and more sophisticated. For example, if different classes of networks were to be tied together (e.g., real time control with status reporting), a network layer would be needed to route packets between the networks. Another application needing a network layer would be out-of-vehicle networking with other vehicles or a roadside messaging system. The local m-vehicle protocol could then be made logically independent of the out-of-vehicle data transport network, allowing the vehicle to

Table 2-2: Physical Layer Implementation Factors

Type of Wiring	Characteristics	Using Issues
Fiber Optic	• Optical waveguide • Very high bandwidth (hundreds of Megabits per second) • Excellent noise immunity	• Expensive • Requires more complex physical interface to circuit • Difficult to splice • Supports long cable runs
coax	• Shielded transmission line • High bandwidth (up to hundred Mbps) • Very good noise immunity	• Moderate cost • Moderately easy to splice • Supports long cable runs
Shielded Twisted Pair	• Insulated copper conductors with external shield • Moderate bandwidth (10 Mbps) • Good noise immunity	• Low to moderate cost • Easy to splice • Supports moderate cable runs
Unshielded Twisted Pair	• Copper conductors twisted together • Low to moderate bandwidth (1 Mbps) • Fair noise immunity	• Inexpensive • Easy to splice • Short to moderate cable runs
Single Wire	• Single copper conductor • Low bandwidth (below 100 kbps) • Poor noise immunity	• Very inexpensive • Very easy to splice • Short cable runs

Table 2-3: Characteristics of Media Access Control (MAC) Schemes

Type of Access	Characteristics	Usage issues
CSMA with random backoff (Ethernet)	• Low latencies under light loading conditions • High latencies and low throughput when network load is heavy	• Simple to implement • Data rates in 10's of Mbps • Good for bursty, lightly loaded networks • Poor for real-time control
CSMA with non-destructive arbitration (NDA)	• Low latencies for high priority messages • Higher latency for lower priority messages • Very good throughput	• Simple to implement • Data rates to 1 Mbps • Can support wide range of latency needs; some real-time control possible • Latency unbounded for low priority messages and heavy loading conditions
Token passing	• Low to moderate latency for all message types • Latency less affected by network loading • Latency is well-bounded • Very good throughput	• More complex to implement • Very high data rate possible (hardware limited) • Better suited to real-time control
Polling	• Similar performance to token passing • Polling can be tailored to needs of each node • Latency is well-bounded . Good throughput: reduced some by polling process	• Requires dedicated polling master node • Good for " near real time" control • Vulnerable to master node failure • Very high data rate possible (hardware limited)

communicate with the roadside system as if they were connected to the same local network. This type of networking was not addressed in this study.

5. In the future there may be some need for the OS1 transport layer, to provide isolation between the application and the network. This may occur when data transmission is bursty or poorly synchronized with the application's data usage, or there is significant transmission of multi-frame data packets or small data files. No transport layer functions were required for the systems evaluated in this study.

2.2.6 Frame Structure

1. The nodes in a multiple access network communicate using predefined bit sequences called frames. The length of the frame is a function of the access scheme and data rate, and is usually a tradeoff that produces good system utilization and low latencies, while allowing all nodes equitable access to the network. A frame is divided into various fields. Each field has a unique value and meaning within the rules of the given protocol. The bits in an individual field may represent a decimal number encoded in base two, or they may represent a mapping into some lookup table (bit map) based on the placement and value of the bits in the field. As data descends the protocol stack from the application layer, each successive layer either reformats the data, segments it into frames, or appends control fields to the it that tell the receiving node software at that layer how to interpret the bit sequence. As the data ascends the protocol stack at the receiving node, the reverse process is applied and fields are stripped off or reformatted into their original form.

2. In an automotive protocol, the application layer generally hands a sample of sensor data or status information directly to the data link layer, bypassing the functions of the intermediate layers. The data link layer then appends the needed flow control and MAC fields directly to the data without any reformatting. This approach is robust and simple, and places little processing burden on the host CPUs. Typical fields found in an automotive protocol are:

   a. Start of message (SOM).

   b. Source address.

   c. Destination address.

   d. Message type/priority.

   e. Transmission mode.

   f. Data (from application layer).

   g. End of data

   h. Cyclic redundancy check (CRC).

   i. In-frame response.

   j. End of message.

3. A typical frame used in automotive applications (SCP in this case) is shown in Figure 2-3. The message begins with a start of message bit, which is a pulse of specific duration (2 bits in this case) used to synchronize the receiving nodes to the beginning of the message. The next field is the Priority/Test field, and is used for contention arbitration. Its bit pattern corresponds to the type or priority of the message, where a binary zero usually has priority over a binary one for any given bit position. Any nodes attempting to transmit during the first bit period must monitor the bus to determine who has the higher priority bit; the nodes having the lower priority bit must cease transmitting, This process continues on each successive bit in the field until all lower priority nodes have dropped out and the highest priority node has control of the bus.

SCP	SOM (2)	MSG Priority/Type (11)	Destination Address (8)	Source Address (8)	Data (1-8 Bytes)	CRC (8)	EOD (1)	ACK (1)	EOM (1)

Figure 2-3: Frame Structure of a Typical Automotlve Networking Protocol

4. Following the arbitration/priority field are the source and destination address fields. These fields are not mandatory in a broadcast protocol, but are useful in reducing the processing burden on the receiving nodes. Using simple logic gates, the receiving nodes can filter out any arriving messages that do not match its address. The address fields can also eliminate ambiguity if more than one node is capable of generating a given message type (a vehicle speed sensor reading, for example), or there is more than one node capable of performing a given function.

5. The data field follows the address fields, and in this case can vary in length. The field size usually varies in increments of one byte, since this is the typical standard word size of computer buses and registers. Variable data field size is usually a desirable feature in automotive networks, because the number of bits needed to encode data can vary widely, depending on the type of sensor. System status flags, for example, may require only one or a few bits. More abstract data such as time, geographic coordinates, or vehicle ID numbers, may require multiple bytes to encode. Sizing every data field to the maximum required data sample size usually results in very inefficient bandwidth utilization.

6. Following the data field is the cyclic redundancy check, or CRC. The CRC is used for error control and is calculated by dividing the message fields preceding the CRC by a known base-2 polynomial. The remainder from this operation comprises the CRC. At the receiving node, a simple arrangement of logic gates performs the same calculation on the same message fields, and compares the remainder to the received CRC. If they match, the message is assumed to be free of transmission errors. If they disagree, the message is discarded. In this protocol, the receiver has a time slot reserved for it following an end of data pulse in which to acknowledge correct message receipt. Depending on the application, the sender may retransmit the frame if this acknowledgement is not received. The end of the frame is demarcated by an End of Message pulse equal to two bit periods.

7. The protocol frame described above is typical of most Class B automotive networks. There are minor variations in the size or presence of address, type, and priority fields, and variations in the size of the data fields. The CRC fields and start/stop pulses can also vary in size. While conceptually similar, these protocols are not interoperable. Even minor variations in message structure and interpretation, contention arbitration, link layer functions, or physical layer parameters would result in misinterpretation of the message fields.

2.3 NETWORK PERFORMANCE ISSUES

The overriding factors for comparing the performance of multiple access network protocols from the end user standpoint are: overall traffic capacity; the expected delay in sending a message of a specified type or priority; and whether any data will be lost or corrupted. These criteria are usually referred to respectively as throughput, latency, and data integrity.

Latency and Throughput

1. The intent of any networking protocol is to find the best tradeoff between system throughput and the average message latency for a given application and network architecture. 'To some extent, these criteria contradict each other: it is impossible to achieve both high throughput and very low average latency simultaneously, while allowing all nodes equitable access to the network. This is an artifact of the basic premise of such networks: any node may try to place traffic on the network at random time slots. As traffic demand from each node increases, the likelihood that two or more random time slots from different nodes will overlap and cause destructive interference also increases. These collisions require that one node retains control of the bus, while the others wait for an idle time slot. This waiting period may be non-deterministic and causes network data packets to be delayed, particularly during periods of heavy network utilization, when collisions are more likely. Therefore, throughput and latency must be discussed jointly.

2. The data throughput capacity of a multiple access network depends on several factors:

   a. The number of physical paths available (usually one for the type of network under consideration).

   b. The number of nodes attempting to transmit.

   c. The frequency of transmission by each node.

   d. The nominal clock speed of the bus.

   e. The speed and efficiency of the message handling hardware and software.

   f. Average size of the message frames.

   g. Amount of non-application layer overhead in a frame.

   h. The number of retransmissions needed.

3. In most automotive networks, all nodes share a common bus and physical transmission path, and operate at a fixed clock speed. Because of contention for the bus, retransmission of errored messages, and protocol overhead, the actual information throughput rate is always less than the nominal clock speed of the bus. Furthermore, some arbitration schemes become very inefficient under heavy network loading, causing average latencies to soar and information throughput to stagnate, even though the bus may be saturated with traffic.

4. The manner in which bus contention is arbitrated strongly influences both throughput and latency. In real time (or "near real tune") systems such as automobiles, there is a need to avoid the unbounded latency/stagnant throughput condition that can occur with CSMA/CD. For this reason, automotive protocols are almost always either Non-Destructive Arbitration (NDA) or token passing.

5. With NDA, messages must be assigned a priority level, as discussed previously. Since higher priority messages are assured faster access to the bus, their latencies are usually very low and well bounded, even under heavy network loading conditions. This opens up the possibility of using such protocols for real time control applications. However, low priority messages may still have the problem of unbounded latency, thus only "can live without" types of messages should be assigned the lower priorities. A proposed network should also be thoroughly simulated to determine the breakpoint (in terms of message priority level) between acceptable and unacceptable latency.

6. With token passing buses, latency is well-bounded for all message types. Token passing prevents the runaway latency problem because all nodes are assured of receiving the token at least once during each token passing cycle. However, the minimum latencies are longer since, on average, a node must wait until half of the nodes in the system have passed the token before it can transmit again. This situation can be remedied by assigning multiple addresses to the higher priority nodes, so that they receive the token more often and thus have a lower average waiting time. Otherwise, the latency distribution would be the same for all messages.

7. Under current industry practice, most real-tune, safety critical control signals such as anti-lock brake actuation, traction control, airbag deployment, and engine management are sent over dedicated wires without OSI-type protocols, The main reason that such systems are not usually networked is the difficulty in guaranteeing very low latencies with a high probability. A typical design goal is that, based on the number of messages sent by a given node, no message exceed its targeted latency bound during the expected lifetime of the vehicle. This requires latency certainty probabilities on the order of 1 in 10^{12} (SAE 940363). Also, it is difficult to anticipate and safely respond to all of the potential failure modes with such an arrangement. To produce acceptably low and constant latency and a high level of fault tolerance, the network may need high bandwidth, small physical size, redundancy, fewer nodes, and a more complex arbitration scheme. However, these criteria may in turn drive up costs to the point that a multiplexed system has no advantage over a dedicated wire solution.

Data Integrity

1. Data integrity relates to how successful the system is at delivering, or otherwise accounting for, all messages sent over the system, without loss or corruption of data. Data integrity is a function of the following factors:

   a. The noise environment in which the system operates.

   b. The data encoding and modulation schemes used.

   c. Message buffer type and capacity.

   d. System availability and reliability.

   e. Error detection algorithms employed.

2. A number of error detection and correction schemes are in use, including convolutional coding, parity check, checksum, and cyclic redundancy check (CRC). Of these, the CRC is the most widely used in network applications. When properly designed, the CRC is sufficiently powerful to give high assurance that there will be no undetected message errors during the lifetime of the vehicle. However, CRCs can vary widely in their effectiveness, depending in the selection of generating polynomial. In general, systems that employ eight-bit (or longer) CRCs can be considered to provide adequate error protection for all classes of automotive data communication, except in cases of extremely high noise environments. This study will assume that the noise environment is within the guidelines specified by SAE.

3. The system's ability to account for all messages depends on the type and size of the message buffers, and the ability of the protocol to perform retransmissions, acknowledgements, and reinitializations. However, it should be noted that many real time systems do not need absolute assurance against lost messages. Occasional loss of a message may be tolerable, particularly when data is being updated frequently. In fact, information that is delayed by retransmission may not be useful. For example, an engine controller may receive oxygen sensor updates 10 times per second. If an update is lost or errored in transmission, the engine may continue to run acceptably with the previous value. In the meantime, the sensor reading may have changed to such an extent that the lost reading is no longer valid or useful. In such systems, errored or delayed messages are usually more detrimental than lost messages.

Fixed Delays

1. Two other potentially important factors can contribute to delays in message delivery: signal propagation delay, and buffer delays. Both of these parameters are constant for a given network topology and protocol.

2. Propagation delay is the amount of time taken for an electrical signal to travel over the physical media. It is approximately (or slightly less than) the speed of light and is usually approximated as one foot per nanosecond (nsec). This may or may not be significant, depending on the size of the bus, the data rate, and the arbitration scheme. For physically small buses operating below a few Mbps, it can usually be neglected since it is much shorter than one bit period. This is the case for all of the buses considered in this study.

3. Buffer (or queueing) delay is the amount of time required to format a network message, clock a message out of a storage register and onto the serial bus at the transmitter, clock the message back into a storage register at the receiver, and unblock the message. It is mostly a function of the bus clock speed and message size, and can be significant. At lower data rates (50 kbps and below), a typical automotive bus may experience buffer delays of several msec or more. This by itself may eliminate a protocol from consideration for real time control applications.

Thing Budgets

1. For understanding all aspects of network delays and whether real time control timing constraints can be met, the entire timing budget of a control system must be considered. The timing budget includes all significant factors that contribute to delay in a digital information processing system (see Figure 2-4). In distributed automotive network applications, this includes:

Sensor Processing	Control Processing	Message output Processing	Network Latency	Message Input Processing	Actuator Control
0.5 msec	2 msec	1 msec	2 msec	1 msec	0.5 msec
7 msec					

Figure 24: End-to-End Timing Budget for a Typical Automotive Network

a. Sensor sampling and analog-to-digital conversion (approx. 0.5 msec).

b. Control algorithm processing (approx. 2 msec).

c. Output message buffering delay (approx. 1 msec).

d. Network latency (varies widely).

e. Input message buffering delay (approx. 1 msec).

f. Actuator data conditioning and digital-to-analog conversion (approx. 0.5 msec).

2. The above delays are fairly gross approximations and can vary significantly, depending on the application. Many real time control applications require end-to-end timing budgets of less than 5 msec, thus network latencies must be quite small, perhaps well under 1 msec. As will be seen later, this can eliminate many protocols from consideration for real time control applications.

2.4 FAULT TOLERANCE AND RELIABILITY

1. The ability to operate reliably, predictably, and safely is critical for real time control systems, particularly those that perform safety-related functions typically found in automobiles. The most obvious way to achieve these goals is to build systems using highly reliable components and assembly methods. However, even highly reliable components may fail, or be subject to external actions such as cut wires, excessive electromagnetic fields, or high levels of shock or vibration. Such systems must be subjected to a rigorous analysis of their possible failure modes, and the effects of the failure modes anticipated in the system design. The ability of the system to identify, correct, minimize, or otherwise control failure modes and effects is known as fault tolerance.

2. A fault tolerant system must be capable of continuing operation, possibly in a degraded mode, in the presence of certain component failures. In general, a system designer must identify the most likely types of failures, and those failures that may have the most adverse impact on system performance and safety. The system must then be designed to identify and respond to these failures, possibly using a combination of software algorithms and hardware. The subject of fault tolerance is quite extensive, thus only a summary of fault tolerance methods for distributed information processing systems will be presented here.

Hardware Fault Tolerance

1. Hardware fault tolerant practices include the use of:

   a. Highly reliable components.

   b. Component redundancy.

   c. Communication circuit redundancy.

   d. Non-destructive testing and bum-in.

   e. Design simplicity.

   f. Fail-safe designs.

2. For reasons of cost and space/weight constraints, automotive manufacturing is more likely to use reliable componentry and design simplicity rather than redundancy to achieve hardware fault tolerance. For safety critical systems such as anti-lock brakes, failure of a processor must not cause a safety hazard in the vehicle. Such systems typically fail over to manual operation, or may continue to operate using nominal, pre-defined control inputs rather than computed control inputs.

Software-Assisted Fault Tolerance

1. Since software has no physical properties, it is not assumed to cause system faults. In the absence of physical faults in the processor circuitry and data storage devices, system software is assumed to function properly. Software design and logic errors may produce incorrect system outputs, but these must be addressed with software design and testing practices rather than fault tolerance concepts. However, logic algorithms encoded in software are widely used to detect and respond to system hardware faults. This is a rather large and complex subject area and will only be briefly summarized here.

   a. Error detection and correction. The single largest problem in any information processing system is the corruption of binary data by electrical noise and interference as it traverses a data bus or communication circuit. By applying an encoding algorithm to the data at its source, then reversing the process at the receiver, most of the transmission errors can be detected and, depending on the algorithm, possibly corrected. The encoding algorithm may be applied to small blocks of data, as with a cyclic redundancy check (CRC), frame check sequence (FCS), or parity check, or the entire data stream may be continuously modified, as with convolutional codes. The widely used Hamming code is somewhat of a hybrid, with parity bits dispersed throughout each binary word. With proper error coding, it is possible to design the system such that there is a very high probability that no undetected errors will pass through the system during its lifetime.

   b. Reasonableness checks. In this strategy, a dedicated diagnostic control module periodically applies simple algorithms to data appearing on the bus. The algorithm checks whether the value of a parameter (e.g., a sensor input), or some other feature in the data, is within a specified range, or if its rate of change from a previous value is within acceptable limits. This is a desirable feature for real time control systems.

c. Diagnostic checks. A diagnostic module may occasionally input a known data sample into a control processor, for which a known result must be obtained. If the result differs from the expected value, the controller is assumed to be in error. This is also a desirable feature for real time control systems.

d. Timing checks. For real time control systems, many functions have predefined timing constraints imposed on them. A control processor may periodically be given a simulated task to perform, while the diagnostic module runs a timer. If the task is not completed within the specified time limit, the control processor is assumed to be in error.

2. Other fault tolerance concepts are possible that combine hardware and software methods, such as dynamic redundancy (hot standby/swapping), replication checking (voting), and checkpoint saving. However, these approaches require significant amounts of component redundancy, dedicated diagnostic modules, and sophisticated control algorithms, thus are not generally applicable to automotive applications. In Section 3, specific fault tolerance guidelines for automotive networking are discussed in the context of IS0 recommendations.

SECTION 3: AUTOMOTIVE PROTOCOLS

3.1 SAE PROTOCOL CLASSES

1. To clarify the interpretation of automotive networking standards and facilitate their application, the Society of Automotive Engineers (SAE) has defined three classes of vehicle communications: Class A, Class B, and Class C. For discussion and analysis purposes, these classes have become fairly widely accepted within the automotive industry. The 1994 SAE Handbook contains the following definitions of these classes:

   a, Class A: A potential multiplex system usage whereby vehicle wiring is reduced by the transmission and reception of multiple signals over the same signal bus between nodes that would have been accomplished by individual wires in a conventionally wired vehicle (i.e., low speed body wiring and control functions; for example, control of exterior lamps).

   b. Class B: A potential multiplex system usage whereby data is transferred between nodes to eliminate redundant sensors and other system elements (i.e., data communications; for example, sharing of vehicle parametric data).

   c. Class C: A potential multiplex system usage whereby high data rate signals typically associated with real-time control systems, such as engine controls and anti-skid brakes, are sent over the same signal bus to facilitate distributed control and to further reduce vehicle wiring (i.e., high speed real-time control; for example, distributed engine control).

2. Some additional comments may help clarify the distinctions between the different classes. Class A data is generally not produced at high rates, and is not used for inputs to automatic control algorithms; it is used to furnish information to the driver or passengers, or to support non-safety critical convenience functions such as climate control, power windows and door locks, electrically powered seats and mirrors, etc. Class B data is generally produced at higher rates than Class A and is exchanged between control modules. It may be used for input to control algorithms, or for status and diagnostic applications. It is not generally used for safety-critical control. Class C may include all of the above functions, but is generally discussed in the context of real-time, safety-critical control.

3. These classes are not mutually exclusive of each other. Class C can be extended to include A and B, and Class B can include Class A (See Figure 3-l). The main distinction between them lies in the end nodes and how they use the information, Class A is intended for relatively simple, non-safety critical switching and sensing functions, where timing is not critical. Class B generally includes the generation, collection, and exchange of status and sensor information among control modules, while still allowing for Class A communications. Class C adds the capability for real-time control, where network latency and vehicle safety constraints are critical. The salient characteristics of these classes are listed in Table 3-l.

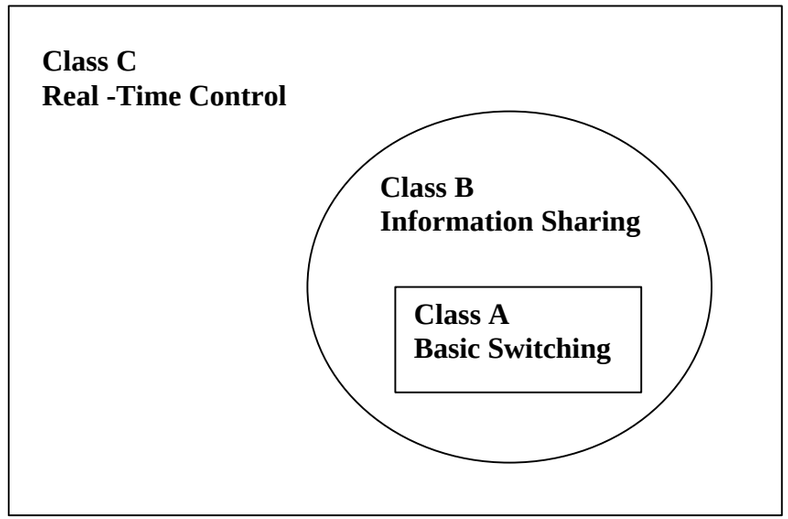

Figure 3-1Relationships of Class A, B, and C Vehicle Communications

Table 3-1 Characteristics of Different Class of Vehicle Communications

	Class A	Class B	Class C
Application	Basic switching sensing	Information Sharing	Real-Time Control
Latency	Near Real-Time	Variable	Real-Time
Time Window	Wide	Variable	Narrow
Extent of System Integration	Some	Extensive	Minimal
Data Critacality	Low Moderate	Moderate	High

4. The SAE standards have been worded to allow a single bus implementation to carry all classes of data, or to allow separate buses or combinations of buses for each class of data. To date, the OEMs have mostly chosen to implement separate buses for each data class, primarily because of cost and safety issues and their desire to thoroughly test new technologies before they are deployed on a large scale. Some OEMs have also chosen to retain proprietary designs and have not yet extended these to other classes of data.

5. The SAE networking standards address each data class separately, rather than as an integrated

that specifically describes how this integrated approach should be implemented. Class C has only been defined in general terms and strategies, and OEMs continue to primarily use proprietary, standalone control systems to perform Class C functions. Some of these real-time systems do have interfaces to Class B networks, through which sensor information is sent out over the network. The main distinction between these networks and a pure Class C network is that they do not carry real time control messages; other control modules connected to the network receive the real time sensor information, but only use the data locally for input to control algorithms.

6. A network that supports all three data classes must support widely varying requirements for latency, message prioritization, data integrity, and network availability. The latencies for the high priority messages must be assured at very high probabilities: a value of one in 10^{12} has been suggested in the literature, based on the assumption that no high priority message should exceed the target latency value during the lifetime of the car. Many of the existing vehicle networking standards are described as Class B, but in actuality, most of these networks could be used for Class C applications by assigning the real time data and control messages the higher priority levels. Concerns over failure modes and effects, vehicle safety, and message latency variability have presented obstacles to this approach.

3.2 SAE NETWORKING STANDARDS

1. Within the United States, the SAE is the most widely recognized source of standards for automotive electronic systems. In practice, OEMs do not adhere rigidly to SAE networking standards, but often develop their own tailored versions of SAE standards. However, SAE terminology and concepts do provide a common foundation for discussing and understanding the tailored OEM standards. The following list identifies all of the current SAE standards, reports, and implementation guidelines relating to automotive data communication, organized according to communication class:

a, Class A:

J2057/1:	Class A Application/Definition
J2057/3:	Class A Multiplexing Sensors
J2057/4:	Class A Multiplexing Architecture Strategies
J2058:	Chrysler Sensor and Control (CSC) Bus Multiplexing Network for Class A Applications

b. Class B:

J1567:	Collision Detection Serial Data Communication Multiplex Bus
J1583:	Controller Area Network: An In-Vehicle Serial Communication Protocol
J1587:	Joint SAE/TMC Electronic Data Interchange Between Minicomputer Systems in Heavy Duty Vehicle Applications
J1699:	J 1850 Verification Test Procedures
J1708:	Serial Data Communication Between Microcomputer Systems in Heavy Duty Vehicle Applications
J1813:	A Vehicle Network Protocol with a Fault Tolerant Multiplex Signal Bus
J1850:	Class B Data Communication Network Interface
J1930:	Electrical/Electronic (E/E) Systems Diagnostic Terms, Definitions, Abbreviations, and Acronyms
J1939/2:	CAN 29-Bit Identifier Data Link Layer
J1962:	Diagnostic Connector
J1978:	OBD II Scan Tool

J1979: E/E Diagnostic Test Modes
J2012: Recommended Format and Messages for Diagnostic Trouble Codes
J2037: Off-Board Diagnostic (OBD) Message Formats
J2054: E/E Diagnostic Data Communications
J2062: Class B Serial Bus Diagnostic Protocol
J2086: An Application Layer Protocol for a Generic Scan Tool
J2106: Token Slot Network for Automotive Control
J2178/1: Class B Data Communication Network Messages: Detailed Header Formats and Physical Address Assignments
J2178/2: Class B Data Communication Network Messages Part 2: Data Parameter Definitions (can support Class A messaging)
J2186: Electrical/Electronic Data Link Security Sensors
J2190: Enhanced E/E Diagnostic Test Modes
J2201: Universal Interface for OBD II Scan
J2205: Expanded Diagnostic Protocol for OBD II Scan Tool (Draft)

c. Class C:
J1922: Powertrain Control Interface for Electronic Controls Used in Medium and Heavy Duty Diesel On-Highway Vehicle Applications (implied Class C)
J1939: Recommended Practice for Serial Control and Communications Network (Class C) for Truck and Bus Applications
J1939/1: Truck and Bus Control and Communications Network
J1939/8: Network Management
J1939/11: 250k Baud Twisted Shielded Pair Physical Layer
J1939/31: Truck and Bus Network Layer
J1939/71: Truck, Bus, Agricultural, and Construction Equipment Application Layer
J205 6/l : Class C Application Requirements Considerations

d. Class not specified:
J771: Automotive Printed Circuits
J1292: Automobile, Truck, Truck-Tractor, Trailer, and Motor Coach Wiring
J1377: Transmission Mounted Vehicle Speed Signal Rotor Specification
J1843: Accelerator Pedal Position Sensor for Use with Electronic Controls in Medium and Heavy Duty Vehicle Applications
J1938: Design/Process Checklist for Vehicle Electronic Systems
J2056/2: Survey of Known Protocols
J2056/3: Selection of Transmission Media
J2246: Antilock Brake System Review

2. Class A is beginning to be deployed in mass-production vehicles. The main impetus has been to reduce the cost and complexity of vehicle wiring harnesses, while increasing the number of passenger comfort and convenience features such as power locks, windows, and mirrors, anti-theft systems, automatic climate control, and memory seats. These features are not critical to vehicle safety, require relatively simple sensing and switching support, and do not produce large volumes of network traffic. Class A protocols to date are very simple, since the cost of adding powerful protocol handling capability to simple switching and sensing devices would be difficult to justify.

3. Class B networking is beginning to see more extensive development. Much of this has been driven by federal and local safety and emissions regulations, and the resulting need for improved diagnostic systems. The state of California now requires vehicles to have an electrical connection available

for connecting an off-board diagnostic system capable of querying the status of all electronically controlled emissions-related systems in the vehicle. The OEMs have also been attracted by the potential for reduced manufacturing and maintenance costs that an integrated electronic diagnostic system may provide. A large volume of standardized, "off-the-shelf' Class B systems and components are now available, with emphasis on in-vehicle diagnostics systems. Such a network can provide a basis for other information sharing applications such as IVHS

4. Most Class C control systems remain standalone, both in terms of sensor information and actuator responses. For safety and cost reasons, they mostly employ dedicated connections directly from the control module to the sensors and actuators. They are widely used for engine control systems and increasingly for anti-lock braking systems, traction control, and other active vehicle control systems. They have not yet been extensively integrated with other classes of vehicle networks.

5. In some cases, Class C sensor information is sent over a network, but is not generally used for real time or safety critical processing. For example, an ABS module may send vehicle speed data over a Class B network, and the Active Suspension module may use it calculate shock absorber damping rates using a sliding average algorithm. In this case, a delayed or lost vehicle speed message will not cause loss of vehicle control or any safety hazard. The worst result would be a temporary over- or under-damped shock absorber.

3.3 OEM NETWORKING STANDARDS

1. Within the realm of data communications networking, dozens of multiple access protocols have been described and implemented. For various reasons, most of these are not suited to automotive applications and were not considered in this study. In general, the priorities for an automotive protocol are:

   a. Simplicity and low processing burden (to contain costs).

   b. Reliability and fault tolerance (for vehicle safety).

   c. Ability to accommodate a wide range of data types and priority levels.

   d. Low error rates.

   e. Electromagnetic compatibility with other systems in the vehicle.

   f. Need for low latency for some message types (for real time processes).

   g. Tolerance for electromagnetic interference (EMI) and voltage level offsets.

2. Most of the general purpose networking protocols do not meet these criteria. Ethernet, for example, has data packets that are too large for efficient automotive use, and does not have acceptably bounded latencies. IEEE Token Ring is too complex and costly ti implement. The automotive environment is tightly constrained by cost, RFI, and safety considerations, which has led the OEMs to develop their own unique protocol standards, tailored to the above requirements.

3. There is considerable variation within the automotive industry regarding the relative weight and ranking of the above priorities. This has resulted in a proliferation of networking protocols that

have many similarities, but are not directly interoperable. For the reasons discussed previously, most of these protocols are classified as Class B. The following list of general purpose, messaging automotive-specific protocols is fairly comprehensive as of the date of this report:

a. CAN (Bosch/Germany and Europe);

b. VAN (ISO/France and Europe).

c. SCP and ACP (Ford).

d. ABUS (Volkswagen).

e. C^2D (Chrysler).

f. PALMNET (Mazda).

g. DLCS (Delco).

h. AUTOLAN (General Instruments).

i. GM Token Slot.

j. Toyota i-Four.

k. Toyota Token Bus.

1. MICS (Mitsubishi).

m. Furukawa (Japan).

n. SAE J1850 (US).

o. DDB (Phillips/Signetics).

4. Figure 3-2 compares the various OEM and SAE vehicle networking standards, and maps them to the ISO/OSI reference model. Note that the standards do not reflect many functions at the presentation, session, transport, or network layers. The exception is J1939/31, which applies to trucks and buses. Networks for passenger automobiles have been designed for simplicity and reliability, and do not support higher layer functions such as inter-networking, data format conversions, or host computer time sharing sessions. It should also be noted that most of the Class B SAE standards deal with off-board diagnostic (OBD) and testing systems. These protocols are intended for use by maintenance technicians or for verification of vehicle emissions compliance, but are mostly 51850 compliant at the lower layers.

	Class A	Class B					Class C	
Application Layer		J2201* J1978*	J2178/2 J2012* J2205*	J1979* J2037*	*J1587*	J2186* J2190*	*J1939/71* *J1922*	*J1939/8*
Presentation Layer								
Session layer								
Transport Layer								
Network Layer							*J1939/31*	
Link Control Layer	CSC ACP		J2178/1 J2054*	J1850 J1567 J1813 MICS *J1708*	CAN VAN SCP ABUS DDB PALM-NET	DLCS AUTOLAN CCD GM Token Slot Toyota i-Four/ Token Bus Furukawa	*J1939/2*	*J2106*
Physical Layer			J1962*				*J1939/11*	

Figure 3-2: Mapping of SAE and OEM Vehicle Networking Standards into the ISO Reference Model

Italics denote truck/bus protocols; * denotes off-board diagnostic protocols

5. The two Class A protocols shown above are highly proprietary and do not support a general messaging capability. They have not been included in the system evaluations that follow. Two of the Class B SAE standards, 51567 and 51813, have been superseded by 51850. Effectively then, there is only one SAE general purpose network protocol standard for passenger cars: J1850.

   a. The physical layer of J1850: Includes those functions needed to process the actual signaling waveforms: bit rate, bit encoding into voltage levels, carrier detection, clock timing, physical transmission media, and physical connection to the network.

   b. The data link layer of J1850: Implements the network contention arbitration protocol. It performs addressing, message buffering, message prioritization, message framing, bit and byte ordering, and error detection/recovery.

   c. The application layer of 51850: Describes some basic functions for message passing, such as message screening and filtering, and processing of diagnostic codes to allow for connection to off-board diagnostic systems. SAE 52178 defines a standard set of application layer messages, called "normal vehicle operation messages" or NVOMs, that facilitate host processing of shared system information. SAE 51979 and SAE 52190 define the diagnostic codes and test modes.

6. Message filtering can be performed at layers below the application layer if desired, either in hardware or software. With this approach, it can be interpreted as a session layer or transport layer function. Hardware based filtering is less flexible, but is fast and reduces the processing load on the host CPU, which may be desirable for real time control applications.

3.4 COMPARISON OF PROTOCOL SPECIFICATIONS AND PERFORMANCE

3.4.1 Physical and Logical Layer Specifications

Table 3-2 compares the most important parameters and specifications of the automotive protocols listed above. The table is organized according to OSI layers for ease of use and comparison. As can be seen, there is a wide range of data rates, bit encoding schemes, error detection, and frame structures. CSMA with NDA is the most widely used bus access and arbitration scheme, although most of the systems listed are not interoperable. These are primarily Class B specifications, although they could easily support Class A, and with careful analysis and design, some Class C functions. None of the listed protocols should be regarded as a "superior" standard. Each is targeted at a specific type of application, with a slightly different ordering of implementation and performance priorities. These standards cover a wide spectrum in terms of cost, complexity, bandwidth, and timing characteristics.

3.4.2 Physical layer

1. Most automotive protocols use Non-Return to Zero (NRZ) or some form of Pulse Width Modulation (PWM) for encoding binary logic levels into bus voltages. The main intent of these schemes is to minimize the number of voltage transitions needed to encode a given bit stream, thereby reducing EMI levels radiated by the bus and improving bandwidth efficiency. They must also be amenable to simple detection methods, such as oversampling. Table 3-3 compares the performance of several commonly used bit encoding schemes operating at 10.4 kbps (SAE 9 107 15).

2. Choice of media may or may not be specified, but is a tradeoff between cost, bandwidth, and EMI requirements. Higher bandwidth requires better shielding, less parasitic capacitance, and more expensive wiring. A two-wire, differential voltage bus gives greater immunity to voltage offsets that may occur in the vehicle.

3. The number of nodes allowed in the network may be a physical limitation based on bus capacitance or protocol timing constraints, or it may be limited by the number of available address/priority slots in the message overhead fields.

4. The ISO fault tolerance number is a rating on a 1 to 9 scale of how well the standard meets the nine ISO fault tolerance recommendations (see below). Currently, only Furukawa/CAN and Advanced PALMNET explicitly address all nine ISO criteria, although several other standards (e.g., basic CAN) also have good fault tolerance characteristics.

Table 3-2a: Comparison of CSMA/NDA Protocols for Automotive Applications

Parameters \ Standards	Furukawa	ABUS	CAN	DDB	VAN	PALM-NET	Toyota i-Four	SAE J1850	SCP	C^2D	DLCS
Physical Layer											
Bit Encoding	NRZ w/ Bit Stuffing	NRZ	NRZ w/ Bit Stuffing	PWM	Man-chester	PWM/ NRZ	PWM	VPW/ PWM	PWM	NRZ	VPW
Media	STP[1]	1 Wire	TP/FO	TP	TP	TP/STP	STP	1 Wire/ TP	–	–	–
Bit Rate	1 Mbps	500 kbps	20 kbps/ 1 Mbps	≤1 Mbps	Variable	20/125 kbps/ 1 Mbps	41.6 kbps	10 kbps/ 41.6 kbps	41.6 kbps	7.8 kbps	10 kbps
Bus Length	20 m	30 m typ.	40 m typ.	150 m	20 m	20 m	40 m	40 m	–	–	–
Number of Nodes	30	30	30	50	16	24/32/16	32	–	32	–	32
ISO Fault Tol.	9	1	7	1	6	7	4	4	7	1	1
Logical Layer											
Error Control	15 bit CRC	Self mon-itoring	15 bit CRC	Parity	15 bit FCS	8/16 bit CRC	8 bit CRC	8 bit CRC	8 bit CRC	8 bit CRC	8 bit CRC
Data Field	≤ 8 bytes	2 bytes	≤ 8 bytes	2-128 bytes	≤ 8 bytes	4/4/8 bytes	1-8 bytes	≤ 8 bytes	1-7 bytes	8 to N bits[4]	0-56 bits
In-Message Ack	Yes	No	Yes	No	Yes	Yes	Yes	Yes	Yes	No	No
Source Addresses	–	–	–	–	–	–	–	8 bits	8 bits	–	8 bits
Prioritites	–	–	–	–	–	8 bits	8 bits	3 bits	8 bits[3]	8 bits[3]	16 bits
Message Types	11 bits	11 bits	11 bits	–	12 bits	8 bits	8 bits	–	–	–	16 bits
Other Overhead	21 bits	16 bits	21 bits	34 bits	8 bits	43 bits	14 bits	18 bits	21 bits	24 + 2N	4.4 bits
Total Frame Size	47 to 111 bits	31 bits	47 to 111 bits	≤ 290 bits	35-99 bits	99/138 bits	≤ 101 bits	≤ 101 bits	53-101 bits	40 - (40+2N)	44.4-100.4 bits
Effect. Data Rate (%/kbps)	31-62%/ 310-620	74%/ 370	31-62%/ 310-620	≤ 75%/ 750	39-69%/ Variable	34/52% 6.8-442	30-61%/ 12.5-25	37-54%/ 15-22.6	51-67%/ 21-28	≥34%/ 2.7	61-75%/ 6-7.5
Buffer Delay (msec)	<0.22	<0.12	<0.22	.03-.5	.07-.2	.2-13.8	2.2-4.9	2.2-4.9	2.5-4.8	10-100	8.9-20

Notes

1. STP = Shielded twisted pair
   FO = Fiber optic
   TP = Twisted pair
   VPW = Variable Pulse Width
   "-" indicates no specification

NRZ = Non-return to zero
PWM = Pulse width modulation
CSMA = Carrier sense multiple access
NDA = Non=destructive arbitration

2. Effective data rate is the percentage of bits in a packet that are used by the application layer; excludes address, priority, CRC, and other control fields
3. Combines priorities with message types
4. N is implementation dependent

Table 3-2b: Comparison of CSMA/CD Polling, and Token Passing Protocols for Automotive Applications

Standard / Parameter	ACP	MICS	AUTOLAN	Toyota Token Bus	GM Token Slot
Physical Layer Bit Encoding	Differential Voltage	PWM	Alternate Pulse Inversion	NRZ w/ Bit Stuffing	NRZ w/ Bit Stuffing
Media	TP	1	Dual Wire	TP -	TP/FO
Bit Rate	9.6 kbps	6.7 kbps	4 Mbps	250 kbps	2 Mbps
Bus Length	40 m	-	40m	-	30m typ.
Number of Nodes	20	-	127	16	32
ISO Fault T of.	5	1	1	2	1
Logical Layer					
Access Method	CSMA	CSMA	Polling	Token	Token
Arbitration	Retry	Retry			
Error Control	8 bit CRC	4 bit CRC	7 bit CRC	* bit CRC	16 bit CRC
Data Field	0-6 bytes	12 bits	2 bytes	2 bytes	# bytes
In-Message Ack	Yes	No	No	No	Yes
Source Addresses	7 bits	-	7 bits	4 bits	-
Priorities	2 bits	-	-	-	-
Message Types			-	7 bits	16 bits
Other Overhead	31 bits	4 bits	2 bits	9 bits	125 bits
Total Frame Size	6-12 bytes	20 bits	33 bits	44 or 13 bits	# bits
Effect. Data Rate (%kbps)	# 50% / <4.8	60% / 4	48% / 1.92M	0 or 52% / 130	Variable ca. 1M
Buffer Delay (msec)	10-20	6	0.02	0.35	.08-2.1

NOTES:

1. STP = Shielded twisted pair
   FO = Fiber Optic
   TP = Twisted Pair
   VPW = Variable Pulse Width
   "__" = indicates no specification
   NRZ = Non-return to zero
   PWM = Pulse width modulation
   CSMA = Carrier sense multiple access
   NDA = Non=destructive arbitration

2. Effective data rate is the percentage of bits in a packet that are used by the application layer, excludes address, priority, CRC and other control fields

3. Combines priorities with message types

Table 3-3: Comparison of Typical Automotive Network Bit Encoding Schemes

	PWM	VPW	NRZ	MFM
Data rate	10.4	10.4	10.4	10.4
Transition time	8 µsec	16 µsec	19.2 µsec	24 µsec
Relative EMI levels	0 dBV	-10 DBV	-13 DBV	-16 DBV
Max. propagation delay	768 usec per byte	1024 µsec per byte	768 µsec per byte	768 µsec per byte
Transitions per bit	2	1	0.75 AVG.	0.75 AVG

3.4.3 Logical layer

1. The roles of the various message fields were explained previously, but some additional comments are in order. Message acknowledgment capability is not generally needed in most automotive networks, since nodes that supply information can be designed to continuously send updated samples. The main exception to this is when one node must request data or some other action from another node, such as might occur when running a diagnostic check The requesting node cannot proceed until it receives a response. A real time, safety critical control system would not usually be designed to operate this way, however.

2. The effective data rate of the bus is always less than the nominal clock speed. Only the message fields used by the application layer (message type and data bytes) are included as actual data throughput. This number must be divided by the total message size to determine the effective data rate of the network, after accounting for control, addressing, and error detection overhead bits. This is not a simple calculation, since many protocols permit variable frame sizes, or use variably sized idle periods for some types of control and synchronization. Simulation is needed to determine the actual values, averaged over time.

3.4.4 Message Formats

The message formats for the above automotive protocols are shown in Figure 3-3. Here again there are many similarities, but no direct interoperability. Note that the messages tend to be rather short, with overhead typically numbering in the vicinity of 50 bits or less, and data fields ranging typically from 1 to 8 bytes, with variable sizing capability. These small messages have the advantages of requiring relatively low bandwidths and imposing a low processing burden on host CPUs. These are desirable features in automotive protocols. The main drawback of this approach is that large data blocks cannot be transferred efficiently. This however is not generally a concern in automotive applications.

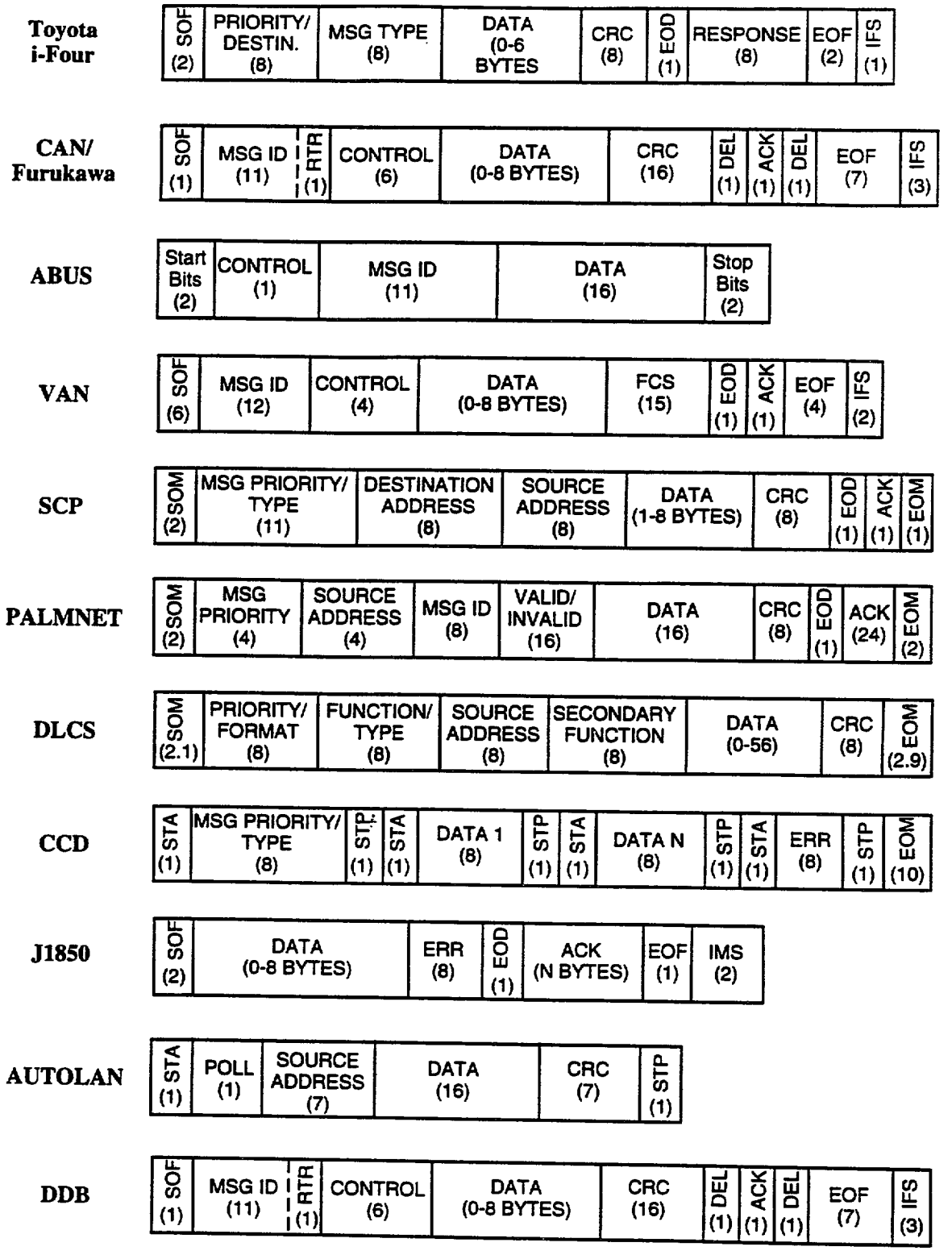

Figure 3-3: Message Formats of Candidate Automotive Protocols

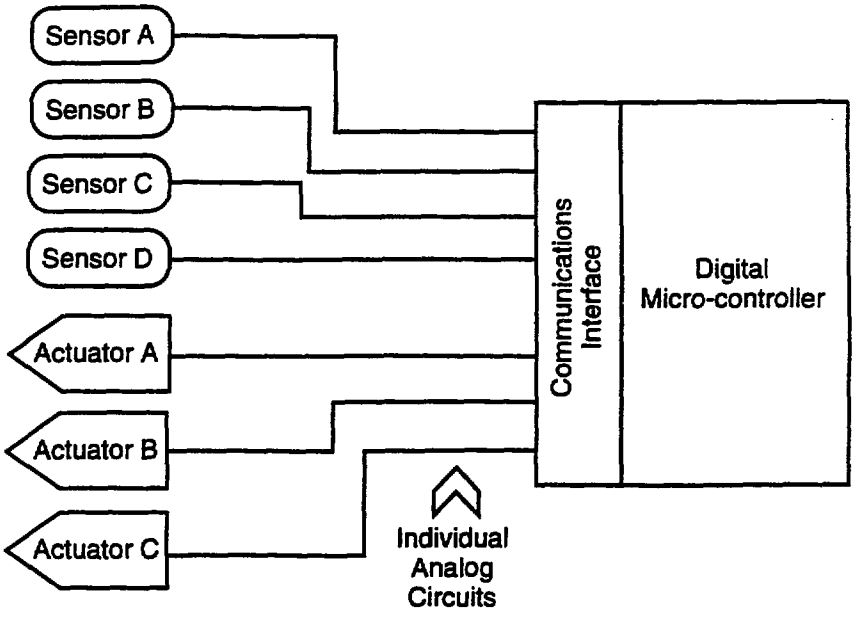

Figure 4-3: Typical Existing or Near-Term Future Standalone Control System Architecture

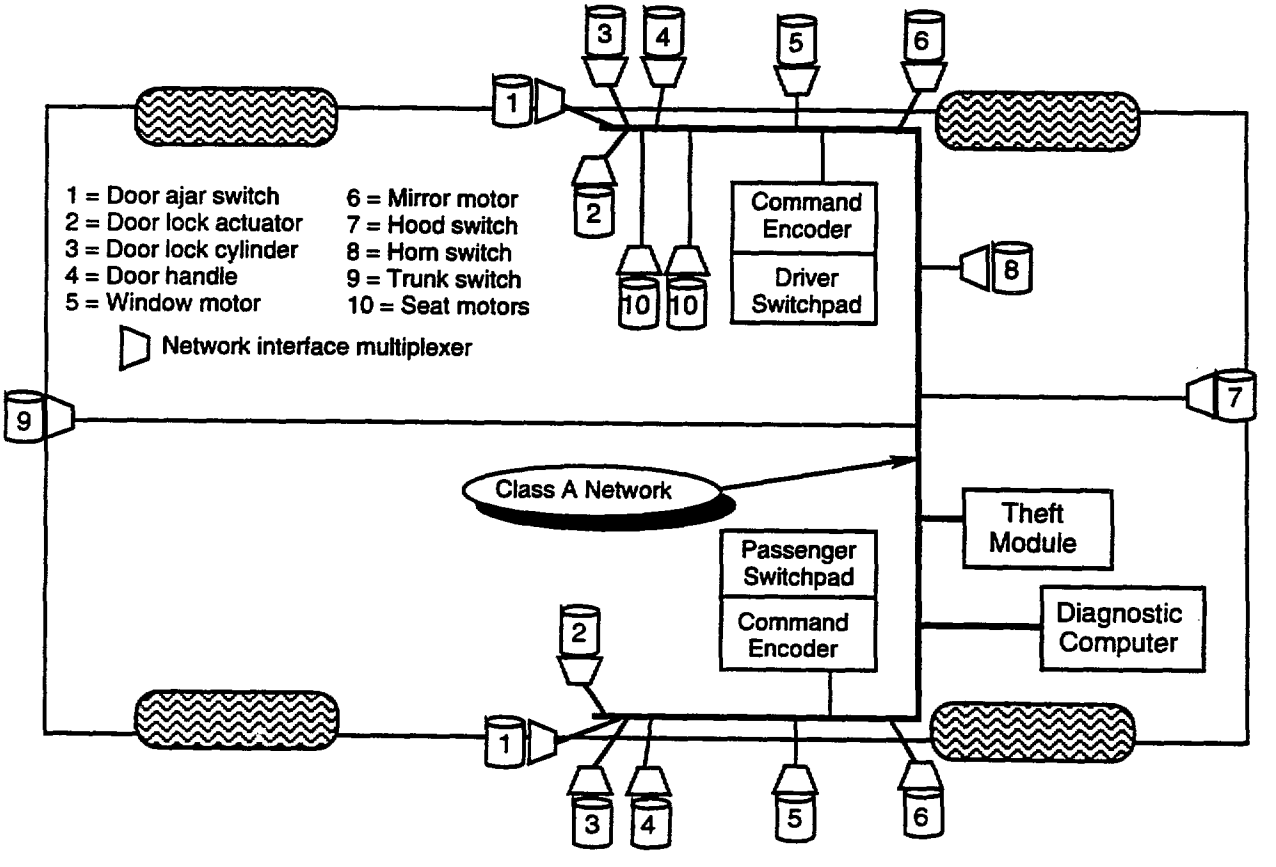

Figure 4-4: Typical Existing or Near-Term Future Class A Architecture

3.4.5 Latency and Throughput

1. Latency and throughput were discussed previously and were shown to be interrelated. Table 3-4 summarizes the latency performance of two typical automotive protocols (CSMA with NDA, and token passing) as a function of network utilization. These results are based on simulations performed by Furukawa Electric (SAE 940363) and show the expected results. Under relatively light' loading, both access schemes can support latencies under 4 msec with a high degree of certainty, making them suitable for some real time control applications. Under light loads, CSMA/NDA has a slight performance advantage, since there is relatively little bus contention. As loads increase, low priority messages in CSMA/NDA begin to suffer high latencies as bus contention occurs more frequently. With token passing, performance also deteriorates somewhat as system loading increases, although the latency spread between high and low priority messages is lower.

Tab/e 3-4: Latency (msec) vs. Network Throughout for Typical Automotive Protocols, Assuming 1 Mbps, 94 Message types/priority Levels, 27 Nodes, 97 Bit Frame Length (4 bytes data), $1x10^{12}$ Certainty Level

	24% Utilization	48% Utilization	96% Utilization
CSMS/NDA			
High priority msg. (#IO)	1.2	2.0	4.0
Medium priority msg. (#42)	2.8	8.5	59
Low priority msg. (#84)	3.1	10	59
Token Passing			
High priority msg. (#10)	2.2	2.9	5.5
Medium priority msg. (#42)	4.9	7.8	11
Low priority msg. (#84)	3.8	6.8	13

2. Table 3-4 suggests that for applications requiring "real time" control (defined here as latencies less than 4 msec), or where timing must be controlled within fairly narrow bounds, a network should not be loaded more than 50%. If a system requires more than 10 high priority messages, it may be necessary to reduce the peak load to a lower level. It should also be noted that CSMA/NDA has an upper data rate limit of about 1 Mbps because of the delay requirements for bit-wise arbitration. Token passing does not have this constraint and can be run at much higher data rates if needed. A token passing system can be further optimized by assigning additional addresses to nodes that have higher traffic volumes or higher priority traffic, without severely penalizing the lower priority nodes. CSMA/NDA performs well for high priority messages, but low priority messages begin to experience unbounded delays as system loading begins to saturate. This may or may not be acceptable, depending on the application and time variation in traffic statistics.

3. The simulation results presented here should be used with caution. Latency is sensitive to a number of factors such as the number of nodes attempting to transmit, frame size, ratio of data to overhead, assignment of node addresses and priorities, network utilization, traffic generation timing patterns, transmission errors, and use of acknowledgments. Most protocols can be "fine tuned" to a given

application by adjusting these parameters, thus simulation is an invaluable tool for system analysis and design.

4. Currently, CAN (and the related Furukawa standard) is the only CSMA/NDA protocol capable of operating at 1 Mbps. If an average network loading limit of 50% is assumed, and an average data field of 3 bytes, then the effective information throughput rate (e.g., sensor data plus message type designator) is 246 kbps. A 1 Mbps token bus would give similar results, depending on the frame structure.

3.4.6 ISO Fault Tolerance

1. The concepts of network reliability and fault tolerance have not yet been rigorously addressed by the various existing automotive standards. Some standards address this topic in great detail, while others appear to ignore it. However, if real time distributed control is to become a reality in the automotive environment, cost effective means for achieving extremely high levels of reliability must be developed. A useful starting point for such an assessment is the ISO fault tolerance recommendations for automotive networking. Briefly, this recommendation requires that a network be capable of withstanding the following nine types of faults:

   a. Bus + open circuited.

   b. Bus – open circuited.

   c. Bus + shorted to battery.

   d. Bus – shorted to ground.

   e. Bus + shorted to ground.

   f. Bus – shorted to battery.

   g. Bus + shorted to Bus -.

   h. Simultaneous open circuit in Bus + and Bus -.

   i. Loss of a terminating resistance.

2. Table 3-5 summarizes the IS0 fault tolerance capabilities of various automotive protocol standards. The blanks spaces in the table indicate that either no capability exists, or the standard does not state a capability. As can be seen, fault tolerance varies widely. Some standards address all nine criteria (Furukawa and Advanced PALMNET), some address a few criteria, while many others do not specify any fault tolerance capability. Note that non-specification does not necessarily mean that the standard fails all nine tests, only that there is no specification, thus no determination of fault tolerance could be made.

3. It should be noted that the IS0 criteria only deal with faults in the actual bus, not in the nodes attached to the bus. Some of the networking standards specify that a failure in a node (e.g., loss of power, failed processor, or disconnection from the network) shall not degrade the performance of the network. This is a highly desirable feature in a safety critical real time control system, since other systems in the vehicle will be isolated from failures in one node.

Table 3-5: Comparison of IS0 Fault Tolerance Capabilities of Aufomofive Protocols

Standard	ISO Criteria								
	1	**2**	**3**	**4**	**5**	**6**	**7**	**8**	**9**
ABUS	(Not Specified)								
Basic CAN	x	x	x	x	x	x		X	
Furukawa/CAN	x	x	x	x	x	x	x	x	x
SCP	x	x	x	x	x	x		X	
PALMNET	x	x	x	x	x	x		X	
Advanced PALMNET	x	x	x	x	x	x	x	x	x
DLCS								X	
CCD									X
AUTOLAN								X	
DDB	(Not Specified)								
i-four			x	x	x	x			
MICS	(Not Specified)								
J1850			x	x	x	x			
GM Token								X	
ACP			x	x	x	x	x		
VAN	xx	x		x	x	x			
Toyota Token	(Not Specified)								

SECTION 4: INDUSTRY PRACTICE

4.1 STANDARDS COMMITTEES AND ORGANIZATIONS

1. There are dozens of independent standards bodies worldwide that issue standards relating to automotive design and manufacturing. Additionally, most large OEMs maintain their own in-house set of standards that may or may not be in agreement with the various independent standards. Most OEMs expend significant effort in coordinating with the major standards writing bodies to ensure that standards reasonably reflect state-of-the-art materials, technology, design, manufacturing, government regulations, and safety concepts and practices.

2. Within the U.S. automotive industry, the SAE is the most widely accepted independent standards issuing body. The SAE comprises numerous committees and subcommittees that oversee all automotive subsystems such as engines, chassis and suspension, fuels and lubricants, electronics, and others. These committees are staffed by prominent individuals in the automotive manufacturing and supply industries, thus their standards tend to be heavily weighted toward actual industry practice. Figure 4-l depicts the relationships between the various bodies involved in the development of standards.

3. In cases where a new standard is needed, it may be written in parallel with, or soon after, the development of a new system or component. Since both the standards writing process and the product development process may take several years to complete, they often occur effectively in parallel. Rarely is a new standard issued well in advance of any products that conform to it. A new standard may be spearheaded by a single OEM, or a small team of OEMs and suppliers. The SAE usually strives to make a new standard as broadly applicable as possible, but at times must also respect the wishes of an OEM to protect proprietary information. The SAE also coordinates with its overseas partners such as SAE of Japan (JSAE) or the SAE European Office, and other standards bodies such as IS0 and ANSI when formulating new standards. Widely used overseas standards such as CAN are frequently incorporated into an SAE standard using essentially the same procedure as for domestic standards.

4. Other standards writing bodies such as ISO, the U.S. Military (ML-STD and MLSPEC), ANSI, the Institute of Electrical and Electronic Engineers (IEEE), and Deutches Industries Norm(DIN) also publish standards that may directly or indirectly relate to automotive design. In most cases, any important, relevant standards issued by these bodies will be incorporated (possibly with some modification) into an equivalent SAE standard if an equivalent SAE standard does not already exist. In nearly all cases, commercial vehicles designed and sold in the U.S. are designed in accordance with SAE and ANSI standards, even though they may be equivalent to an oversees standard.

4.2 NETWORKING STANDARDS USAGE

1. Automotive OEMs tend to develop systems and components primarily according to their own in-house needs, specifications, and standards. However, a new product may heavily influence a new standard, or vice versa. To accommodate several OEMs, SAE standards are often kept very open and flexible in wording and technical details. When the OEMs diverge significantly, the SAE may

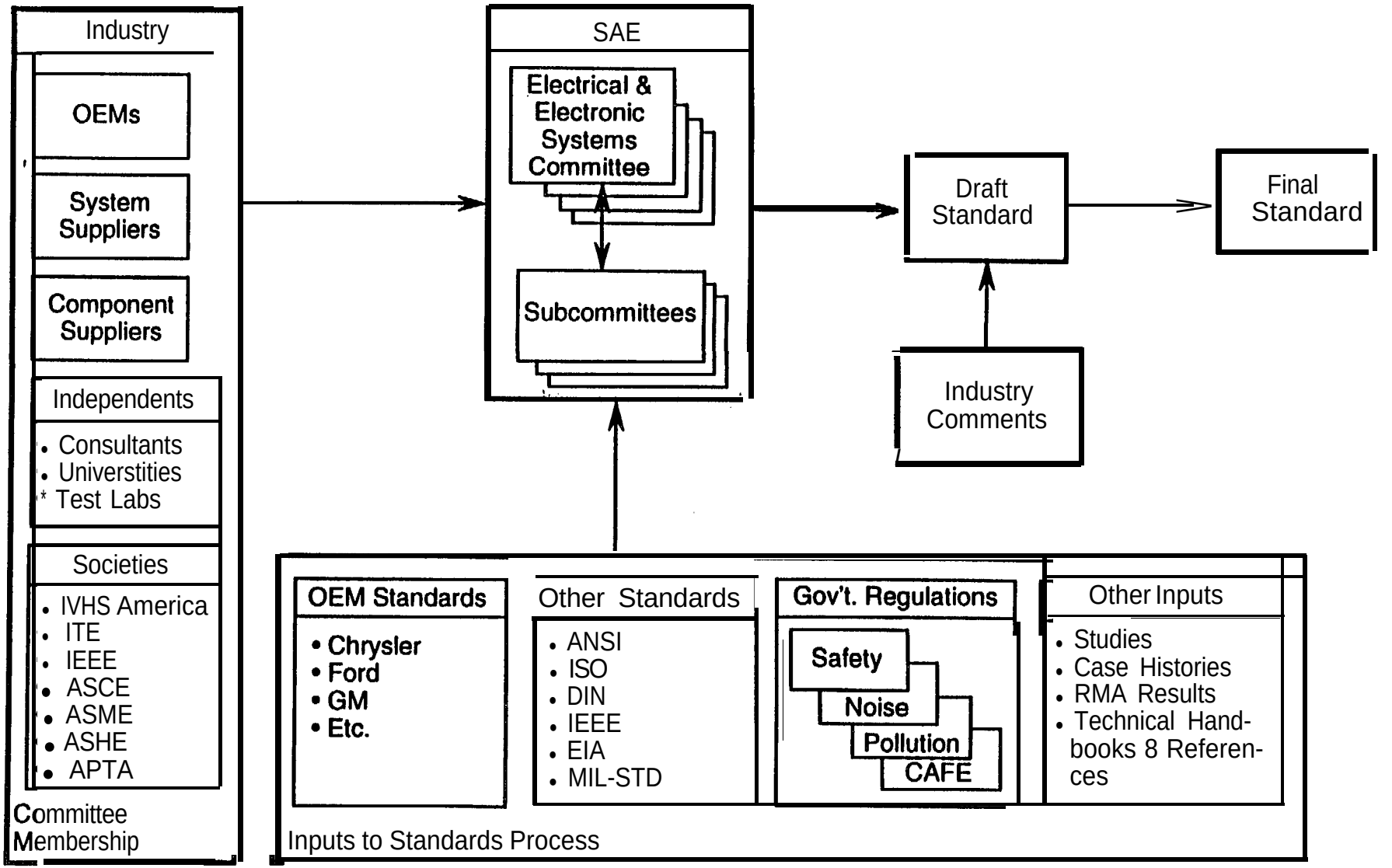

Figure 4-1: Overview of SAE Standards Writing Process for Automotive Electrical and Electronic Systems

write separate standards that address each OEM individually. OEMs are under no legal obligation to adhere to SAE (or other external organizations) standards.

2. The SAE "J-series" of reports and standards are contained in the SAE Handbook, which is updated yearly. SAE standards are fairly comprehensive and generally reflect actual practice in world-wide automotive manufacturing. The main difficulty in implementing SAE standards is their often intentionally broad wording. By themselves then, SAE networking standards are usually not sufficient to design and manufacture an actual product. A supplier of an electronic system or component to an OEM would need to coordinate fairly closely with the OEM when developing a new product to ensure compliance with the specific practices of that OEM. The SAE Handbook anticipates this to some extent, and publishes supporting notes and reports to supplement the standards.

3. The SAE 51850 and Bosch CAN network standards are currently the most widely recognized for general purpose passenger vehicles applications. J1850 standard supports two variations: a single wire, pulse width modulation scheme at 10 kbps, and a two wire, variable pulse width modulation scheme at 41.6 kbps. A 125 kbps version is currently being developed. The two existing versions employ somewhat different bit encoding and message formats and are not directly interoperable. The two wire version is somewhat more costly, but gives better noise immunity and supports more nodes, higher data rates, and longer cable runs. In practice, U.S. domestic OEMs each have their own in-house networking standards that are "J1850-like", but are not exact implementations of J 1850 and are not interoperable with other OEMs.

4. In Europe, particularly Germany, the CAN standard has been widely adopted, with little or no modification. CAN uses shielded cable and operates at 1 Mbps, and contains fairly powerful fault tolerance and error checking capabilities.

5. The automotive industry is currently in a transition phase in relation to electronics and networking. A wide array of standards are in place, but only a few luxury car models are available with in-vehicle networks. These include BMW and Mercedes (CAN), and Toyota (i-Four), Nissan (IVMS), Chrysler (CCD), and Mazda (PALMNET). Figure 4-2 shows actual implementations by manufacturer and car model on a yearly timeline.

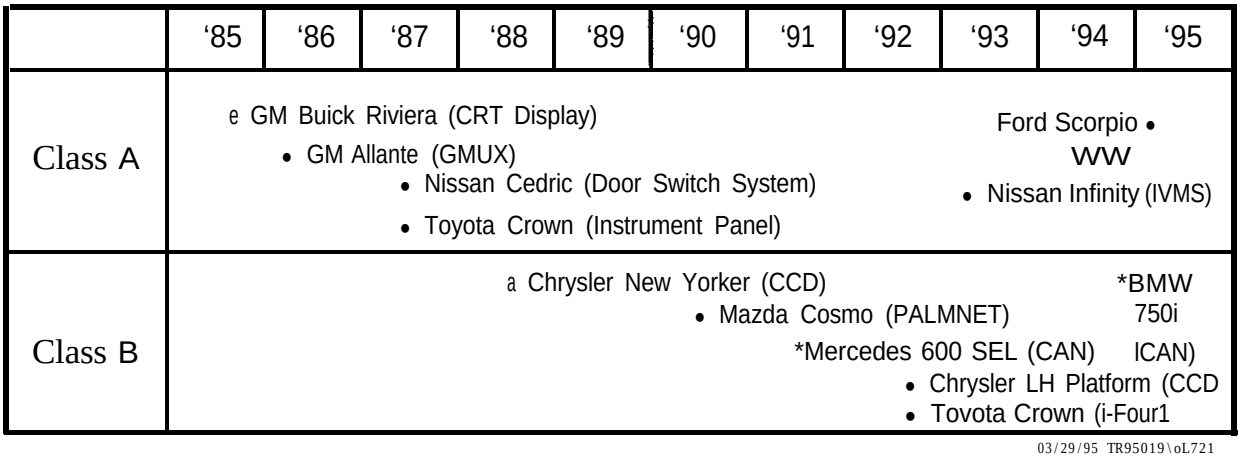

Figure 4-2: Timeline Showing Actual Implementations of In- Vehicle Distributed Networks

6. The state of California has mandated that cars having closed loop electronic engine controls be equipped with a universal interface for an off-board diagnostic (OBD) computer after 1994. This has prompted most OEMs to begin development of Class B networks to supply the required diagnostic data. However, rather than requiring OEMs to support one type of interface, the OBD computer must be capable of interfacing with several different physical and data link layers. Only the application layer diagnostic codes will be standardized across different OEMs Such a network could readily be extended to perform other Class B functions within the vehicle.

7. Silicon manufacturers and component suppliers generally discuss their products in terms of J1850 and CAN. However, for a specific application, a basic chip set is almost always tailored or modified to meet an OEM's in-house standard. In effect, all of these in-house standards are "J1850-like", or "CAN-like", but they are not interoperable and do not comply exactly with J1850 or CAN. As of the writing of this report, there is no distinct trend toward a convergence or consolidation of OEM networking standards.

4.3 MANUFACTURING PRACTICE

1. In the areas of standards definition and deployment of new systems, automotive electronics is driven by the OEMs. The OEMs in turn may be driven by numerous factors such as government regulations for safety, noise, fuel efficiency, and pollution, customer needs, and market competition. Standards do not generally gain widespread acceptance until one or more OEMs have deployed an operational system based upon that standard. Different OEMs may adopt slightly different approaches to developing systems which perform essentially the same functions, requiring either unique standards for each OEM, or a single, openly worded standard.

2. When designing a new system or component, the OEM must first determine all applicable government regulations in each market in which the vehicle is to be sold. These regulations vary widely from market to market, and may be imposed by local, state, or federal regulating bodies. In cases of wide differences or outright conflicts in these regulations, a different vehicle may be developed for each market (or similar markets). Proceeding to the design phase, most OEMs then apply their own in-house standards to systems and components. These standards may have been developed totally independently by the OEM, or they may be modified versions of standards published by an independent standards committee (such as SAE), or they may simply reference an external standard in its entirety. In many cases, an OEM's in-house standards will closely parallel an equivalent SAE standard.

3. When invoking a standard, an OEM must satisfy a number of legal and technical issues, such as:

   a. Is the standard compatible with all applicable government regulations?

   b. Is there a suitable in-house standard?

   c. Is there a more widely-used industry standard that should have precedence?

   d. Is there a need to be compatible with some other system or standard?

   e. Are there suppliers capable of building to that standard?

   f. Will the standard impose unreasonable cost or development time burdens?

To date, IVHS has mostly been an aftermarket technology, thus an OEM is more likely to rely upon external standards. However, this is complicated by the fact that there may be 10 or more different bodies that issue standards for a given system or type of technology.

4. In general, OEMs contract out the development of electrical and electronic systems such as IVHS to specialized system suppliers such as Delco, TRW, Eaton, and Bosch. Suppliers are generally very responsive to any OEM needs for standards-compliant components, thus there is an ample supply of off-the-shelf components available for developing new electronic systems. In the past, when automotive electrical systems were relatively simple, a single supplier might supply all of the electrical components. With today's more complex electrical systems, an OEM is likely to obtain systems and components from a wide range of suppliers. For example, Bosch may supply an engine management system, TRW an anti-lock brake system, and Eaton a cruise control system. These suppliers may in turn obtain low level components such as semi-conductor chips and connectors from numerous other suppliers.

5. A number of large, well-known manufacturers supply semi-conductor logic devices and circuit boards to the automotive industry. These include vendors such as Intel, NEC, Toshiba, and Harris. These firms mostly supply components to the system developers, and only rarely directly to an OEM. In many cases the semi-conductor suppliers do not know the specific application to which their products are being applied, only that certain physical and logical interface specifications must be met. The demand for higher level integration of electronic components and systems is mainly driven by the OEMs seeking to reduce manufacturing costs, increase vehicle functionality and reliability, or meet government regulations, and less by independent developments by suppliers and startup firms.

6. Most of the major semi-conductor manufacturers now have fairly extensive catalogs of SAE J1850-compliant components. To reduce costs and development tunes, some vendors are taking a modular approach with these chip sets, rather than integrating an entire suite of networking and processing functions onto a single chip. Typically, a supplier deals only with one or a few OEMs and may maintain separate chip sets for each. As automotive multiplexing technology matures and the pace of new product introductions begins to slow, there will be an increasing amount of integration of memory, bus driver, and protocol logic into one or two chips. However, there is no sign that the pace of new multiplexing product introductions will level off anytime soon. In the interim, the modular approach will be more prevalent.

7. Other than sharing a common power supply, the various automotive electronic systems are not currently integrated to any large extent, and do not exchange significant amounts of information. However, there may be some cross-connection of sensors or actuators, as for example, the wheel spin sensors that supply inputs to ABS, TCS, All-wheel steering, and chassis control systems. There is growing acceptance within the industry that increased use of multiplexing and electronic integration will eventually result in cost and weight savings, but the transition to this goal will most likely be gradual.

8. OEMs are highly sensitive to cost increases. Unless mandated by government regulation or strong customer demand, a new system must have minimal cost impact on the overall vehicle. With advanced electronic systems, OEMs will tend to wait until greater economies of scale have driven down production costs, and the proposed systems have undergone extensive trial and refinement in other related industries. In such cases it is often the aftermarket products industry that leads the deployment of new technologies. The aftermarket can quickly deploy a wide array of standalone

products based on emerging technologies. Those products that are most successful are often adapted by the OEMs as either standard or optional features on future car models.

9. A number of IVHS crash avoidance concepts and technologies are now in the prototyping or early implementation phase, including front and rear collision waming systems, intelligent cruise control (ICC), blind spot monitors, lane position monitors, vision enhancement systems, and intersection crash countermeasure systems. Examples include Delco's Forewarn front and rear detection system, Eaton's VORAD collision warning system, and TRW's Collision Warning System. Other than ICC, these systems are standalone and connect only to an in-vehicle display or alarm system. They are not currently integrated with any other on-board electronic systems.

4.4 ENABLING TECHNOLOGIES

The ability to integrate safety-related automotive electronic systems depends on a number of enabling technologies and concepts. Some of these enablers are already in place, while others require further development. In general, automotive electronic control systems require three types of components: electronic sensors, electro-mechanical actuators, and control modules. These components may range from simple analog devices, to complex, digital logic devices

4.4.1 Sensors

Electronic sensors are used to collect data from the automotive environment and deliver it to either the driver, a diagnostic system, or a control module in a suitable format. Typically, a sensor alters its electrical impedance, output voltage, or current drive in response to a changing environmental parameter such as temperature, pressure, or oxygen level. A dedicated wire conveys the unprocessed electrical signal to a control module, which detects the change in current flow or voltage and interprets the parameter value based on a known calibration curve or lookup table. Since most controllers today use digital logic circuits, the parameter is usually converted into a binary word at the controller. This information may then used by the controller in an algorithm or lookup table to determine a required control action, or to drive a display. Given the constraints of cost and ruggedness, most automotive sensors are relatively simple devices, with analog voltage or current drive outputs, and little or no digital logic capability.

4.4.1.1 Class C Sensors

1. The earliest and most extensive application of sensors was in the area of engine and emissions controls. These systems enable much more accurate control of the air/fuel mixture, exhaust gasses, and ignition timing, which improves performance and fuel economy while reducing harmful emissions. Typical sensors used for engine and emissions control include:

   a. Throttle position.

   b. Accelerator pedal position.

   c. Intake manifold pressure.

d. Exhaust oxygen content.

e. Engine temperature.

f. Engine RPM.

g. Cylinder pressure (knock).

h. Ambient temperature.

i. Air/fuel ratio.

j. Turbocharger boost pressure.

k. Fuel octane level.

l. Fuel pressure.

m. Exhaust temperature.

2. Not all of the above sensors are required for engine control, In fact, many systems use only a few of these sensors. More sensors may be used, depending on the need to optimize performance, fuel economy, or emission levels. Most of these sensors have baseband analog interfaces, with voltages ranging up to several Volts, current levels less than one Amp, and bandwidths on the order of 50 Hz or less. For timing related measurements such as engine RPM, crank angular position, and wheel speed, the sensor output is generally in the form of a train of voltage pulses obtained from a magnetic induction pickup coil or Hall effect sensor. The time intervals between the pulses are measured by the controller to calculate the needed parameter value.

3. Developments are now occurring rapidly in the area of chassis system sensors. Chassis systems such as anti-lock brakes (ABS), traction control systems (TCS), active suspension, all-wheel steering (AWS), variable assist steering (VAS), and lateral stability control systems make extensive use of sensors that detect vehicle dynamic behavior. As with engine sensors, most of these have low voltage and current levels, small bandwidth, and analog outputs. These sensors include:

a. Wheel speed.

b. Vehicle speed.

c. Steering angle.

d. One-, two, and three-axis acceleration.

e. High-g collision sensing.

f. Vehicle ride height.

g. Suspension stroke length.

h. Throttle setting.

i. Shift lever position.

j. Brake hydraulic pressure.

k. Yaw velocity.

4.4.1.2 Class A Sensors

1. Class A sensors are heavily used in driver warning and display systems. These sensors are grouped as Class A because they mainly supply low data rate, non-safety critical information to the driver and are not used for direct control inputs. Resolution and accuracy are also usually lower than with control-related sensors. Most of these have simple analog interfaces, although in some cases the signals are digitized and displayed in numerical format by an instrument cluster controller. These sensors include:

a. Engine temperature.

b. Ambient temperature.

c. Oil pressure.

d. Fuel flow rate.

e. Fluid levels (coolant, wiper fluid, engine oil, transmission fluid, power steering and brake fluid).

f. Tachometer.

g. Speedometer.

h. Battery charging curmnt/voltage.

i. Switch and lock status (doors, door locks, hood, trunk, seat belts, headlamps, key in ignition, etc.).

4.4.1.3 IVHS Sensors

1. Sensors are also being developed for MIS applications, although these have not yet seen widespread implementation in passenger vehicles. In most cases, the technology is derived from other applications, such as police radars, office security systems, and military aircraft These sensors may be significantly more complex than the simple analog current/voltage sensors discussed above. They usually require a built-in control or signal processing device, and rely much more extensively on digital signal processing, very large scale integration (VLSI) integrated circuits, and programmable microcontroller technology. To date, they have not been significantly integrated using Class A, B, or C in-vehicle networking. These sensors include:

a. Microwave radar for range, direction, and velocity measurement.

b. Laser ranging devices.

c. Infrared imagers and pulse detectors.

d. Video imagers.

e. Ultrasonic range and motion detectors.

f. Radio transceivers for navigation (e.g., GPS) and personal communication

4.4.2 Actuators

4.4.2.1 Class C Actuators. To operate with an electronic control system, an actuator must employ some type of electro-mechanical energy conversion concept. In most cases, this involves a coil, relay, silicon switching device, or electrical motor acting on a mechanical device such as a valve, pump, or lever. A number of electromagnetic actuators are used in Class C automotive chassis and engine control systems.

1. Engine control systems. Solenoid valves, relays, and stepper motors are used to control devices such as the throttle, EGR valve, PCV valve, air injector, and fuel injectors. These actuators do not generally contain digital logic capability and operate directly from analog voltages or current levels from the control module.

2. Chassis control systems. Solenoid valves are widely used to regulate pressure in hydraulic and pneumatic systems. This includes shock absorber damping orifices, brake and steering system hydraulic pressure, pressure applied to hydraulic rams (for ride height control). Air pressure in pneumatic suspension systems may come from a belt-driven compressor attached to a pressure reservoir. The compressor may be engaged or disengaged by a relay-controlled clutch.

f. 4.4.2.2 Class A Actuators

1. Relays are used extensively for simple Class A switching functions such as power door locks and remote latch releases. The relay may be directly in-line with a dedicated switch, or may be attached to a switch multiplexer control console or Class A network interface.

2. DC motors are used for low power Class A applications such as power seats, windows, mirrors, and antennae, and windshield wipers. The motors may be controlled directly through an in-line switch, or by a Class A network interface device.

G 4.4.2.3 IVHS Actuators. At present, IVHS systems do not make extensive use of actuators. Most of the systems deployed to date are passive driver warning devices that do not actively intervene in the control of the vehicle and therefore do not require a direct actuator connection. The most likely scenario for integrating an M-IS system with an existing in-vehicle control system would be to evolve an existing passive IVHS warning device into a limited vehicle control module. This module would then connect to an existing vehicle control module over a Class C network. The actuator connections would remain direct to the existing vehicle control module rather than the new IVHS control module.

4.4.3 Control Modules

4.4.3.1 Design and Functlonallty

1. Control modules today are usually programmable digital logic devices, and represent the most complex element in automotive electronic control systems. They consist of a collection of Integrated Circuit (IC) chips (and some discrete components) that perform functions such as program execution, signal processing and conditioning, memory management, data storage, and communications interface. Components are usually mounted on a single printed circuit board.

2. Since sensors and actuators usually employ simple analog interfaces, the control module must perform the external interface functions, signal conditioning, analog-to-digital conversion, communications control, digital-to-analog conversion, and actuator signal fan out. These functions are usually implemented in dedicated communications processing ICs. The CPU chip performs the control program execution, interrupt servicing, and possibly memory management functions. Physically, there is no distinction between processors used for Class A, B, or C functions, other than possibly a need for higher reliability for Class C information processing.

4.4.3.2 Processors Characterlstlcs. The processing demands placed on most automotive control systems are relatively modest compared to modem high performance computers. To contain costs, most systems employ relatively simple 8-bit or 16-bit microprocessors operating at clock speeds in the 4 to 8 MHz range. Most of the control algorithms are programmed in assembly language to ensure fast execution. This indicates that automotive control systems could potentially handle much higher processing loads, since far more powerful microprocessors are available.

4.4.3.3 Memory Characteristics. A separate programmable Read Only Memory (PROM) chip is used for storing the control program. This allows the control program to be easily upgraded or replaced in response to technological developments or maintenance needs. The processor may also have several kilo-bytes of non-volatile storage available for storing system status data To perform more comprehensive status and diagnostic functions and Class B information sharing, controllers would require more memory, most likely in the form of volatile or non-volatile RAM. A one Megabyte RAM chip now costs less than $25 with volume pricing. There is not likely to be a need for archival type storage devices such as magnetic disk, tape, or optical disk

4.5 ARCHITECTURE APPROACHES

4.5.1 Existing and Near-Term Future Architectures

1. At present there is only modest use of networking and multiplexing in automotive control systems. The few networks that have been deployed mostly fall into the categories of diagnostics and Class A switching and sensing. Existing control systems are mostly stand-alone, with analog sensors and actuators directly connected to the control module. Standalone electronic engine control units (EECs) are by far the most widely used automotive electronic control system. They are installed in every new car currently sold in the U.S. A representative standalone control system is depicted in Figure 4-3.

2. A typical Class A network is depicted in Figure 4-4. The main intent of Class A networks is to reduce the cost and complexity of wiring, and eliminate redundant sensors, switches, and connectors. In a typical application the amount of wiring, connectors, and splices can be reduced by approximately 16 to 30% with commensurate cost savings (SAE 910471). The network may be linked to a diagnostic system (usually the EEC or similar control module), but the network traffic load is low, and latencies up to possibly several hundred msec can be tolerated. The network bus speed is typically less than 10 kbps.

3. Other existing control systems include ABS, ABS with TCS, active suspension, stability control, VAS, air bags, and seatbelt tensioners. TCS uses the same sensors and actuators as ABS and is usually integrated with the ABS controller. ABS, often with optional TCS, is becoming more widely available on moderately priced vehicles. The other systems mentioned may share some sensor data (e.g., wheel speed sensors) over a Class B bus, but in terms of control processing and actuator response are usually stand alone. They are only available on a limited basis, usually in more expensive classes of vehicles. Some manufacturers (e.g., Toyota and BMW) have designed vehicles to share information among the chassis and engine controllers by furnishing the control modules with Class B network interfaces. The data being exchanged in these systems is generally not safety critical and can tolerate occasional increases in latency or loss of data integrity.

4.5.2 Mid-Term Future Architectures

1. In the mid-term future, OEMs are likely to continue building standalone control systems, although these systems may become more powerful, reliable, and efficient, and will increasingly share infonnation over Class B networks. Additional sensor and actuator connections may be accommodated, and control actions updated more frequently. These systems will likely employ more powerful microprocessors and larger memory sizes. However, it does not appear likely that multiple control systems (e.g., ABS, AWS, ASC, ETC) will be integrated into a single, unified control module, for the following reasons:

   a. Individual, safety-critical control systems must be fail-safe. This is difftcult to achieve if the systems share a common power supply, sensor, or driver interface that may fail and thus affect all systems.

   b. Existing individual standalone systems can be readily networked into a cooperative, distributed system with little redesign or modification. Integrating them into a single, high performance module would require a significant, complex redesign.

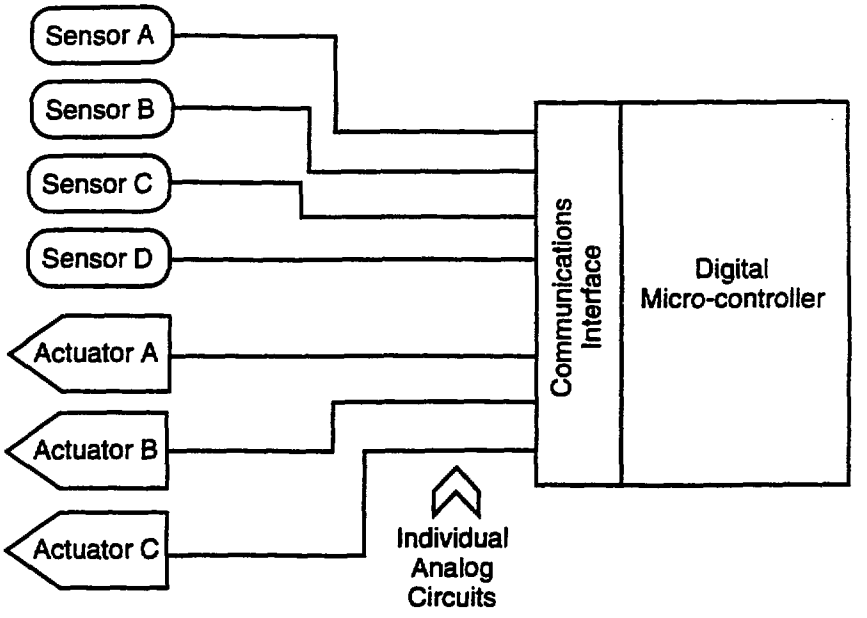

Figure 4-3: Typical Existing or Near-Term Future Standalone Control System Architecture

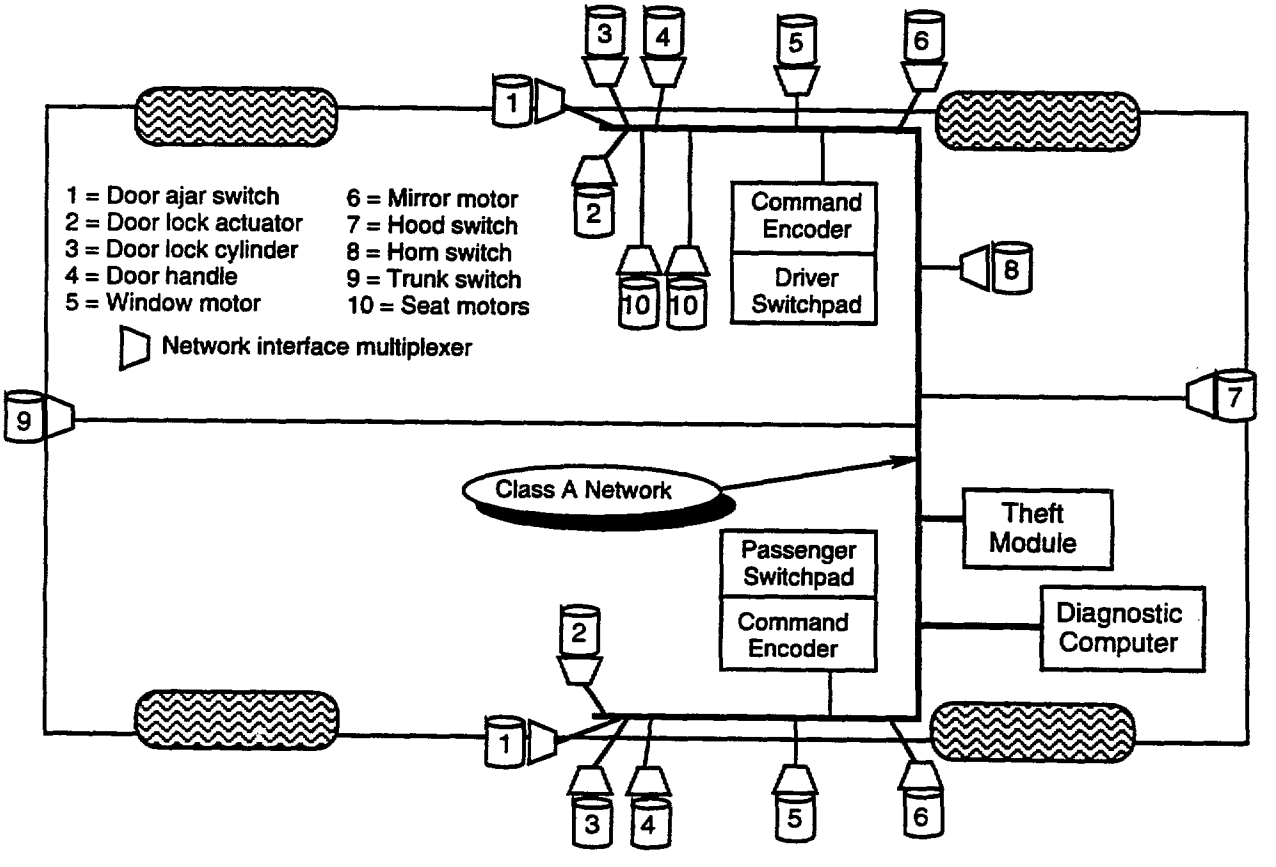

Figure 4-4: Typical Existing or Near-Term Future Class A Architecture

c. Repair and maintenance costs for a unified system are prohibitive, possibly requiring replacement of the entire module. With a distributed system, individual components can be repaired or replaced.

d. A unified system cannot be easily optimized to its environment and location in the vehicle, since it may need to satisfy many more (possibly contradictory) constraints than each of the individual components in a distributed system.

2. Networking in the mid-term is likely to occur most frequently in the area of diagnostics and status reporting, and sharing of non-safety critical information among control modules. In earlier implementations, most of the status data will be stored locally by the controllers, and retrieved on command by an external OBD computer, or possibly an in-vehicle message center. Some implementations may employ a separate, dedicated diagnostic controller that continuously monitors or queries the network for status information, and reports any discrepancies to the driver.

3. In a few luxury class models, independent control systems are interconnected by a Class B data sharing bus, as stated previously. A representative architecture is shown in Figure 4-5. The local controllers have the interfaces to the sensors and actuators, and execute the local control algorithms. Data used in these algorithms may come from locally connected sensors, or may be obtained from the network There is some ambiguity as to whether such a network should be classified as Class B or Class C. No control messages are sent over the network (i.e., no distributed control), but sensor data used to compute control actions in other modules may be sent over the network. This hybrid Class B/C approach may continue for some time until the architectures are proven to be highly reliable and able to support distributed control without dangerous failure modes. Some "drive by wire" distributed control prototype vehicles have been developed, but none are near to becoming production vehicles. Reliability and failure mode effects are the primary concerns.

4. The main advantages of Class B networking in the mid-term will be the facilitation of diagnostics and emissions verification, the potential to eliminate redundant sensors for control inputs, and more powerful, cooperative chassis and drivetrain control. It does not currently seem likely that distributed, real time control over Class C networks will see any large-scale deployment in the mid-term. Timing and latency constraints, failure modes, and cost issues will need to be resolved.

4.5.3 Long-Term Architectures

1. The long-term approach to integrating automotive control systems is not yet clear. It is probably reasonable to assume that both Class A and Class B networking will continue to develop and mature. This may continue to the point that merging the two classes is desirable, either by employing a single high performance network, or giving the Class A controllers an interface to the Class B network. This approach is depicted ln Figure 4-6. At some point however, a single Class B network may become overloaded, causing network latency and throughput to deteriorate. This suggests either network partitioning based on functionality, timing constraints, and safety criticality, or a higher performance network standard. For example, a separate driver convenience subnet could carry the Class A traffic, a Class B subnet could carry the diagnostic and shared non-safety critical sensor data, while a highly reliable Class C subnet supports distributed real time control. The subnets could be interconnected using an intemetworking device such as a router, switching hub, or "firewall". This concept is illustrated in Figure 4-7.

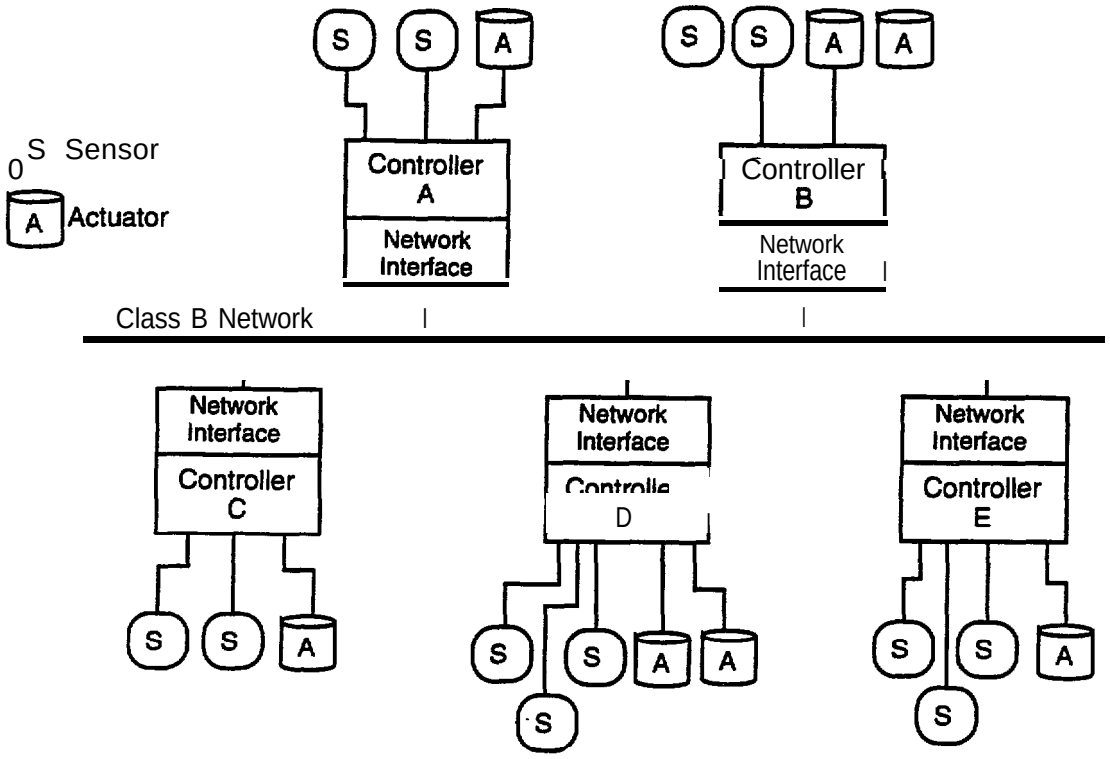

Figure 4-5: Typical Mid-Term Future Class B Network Architecture

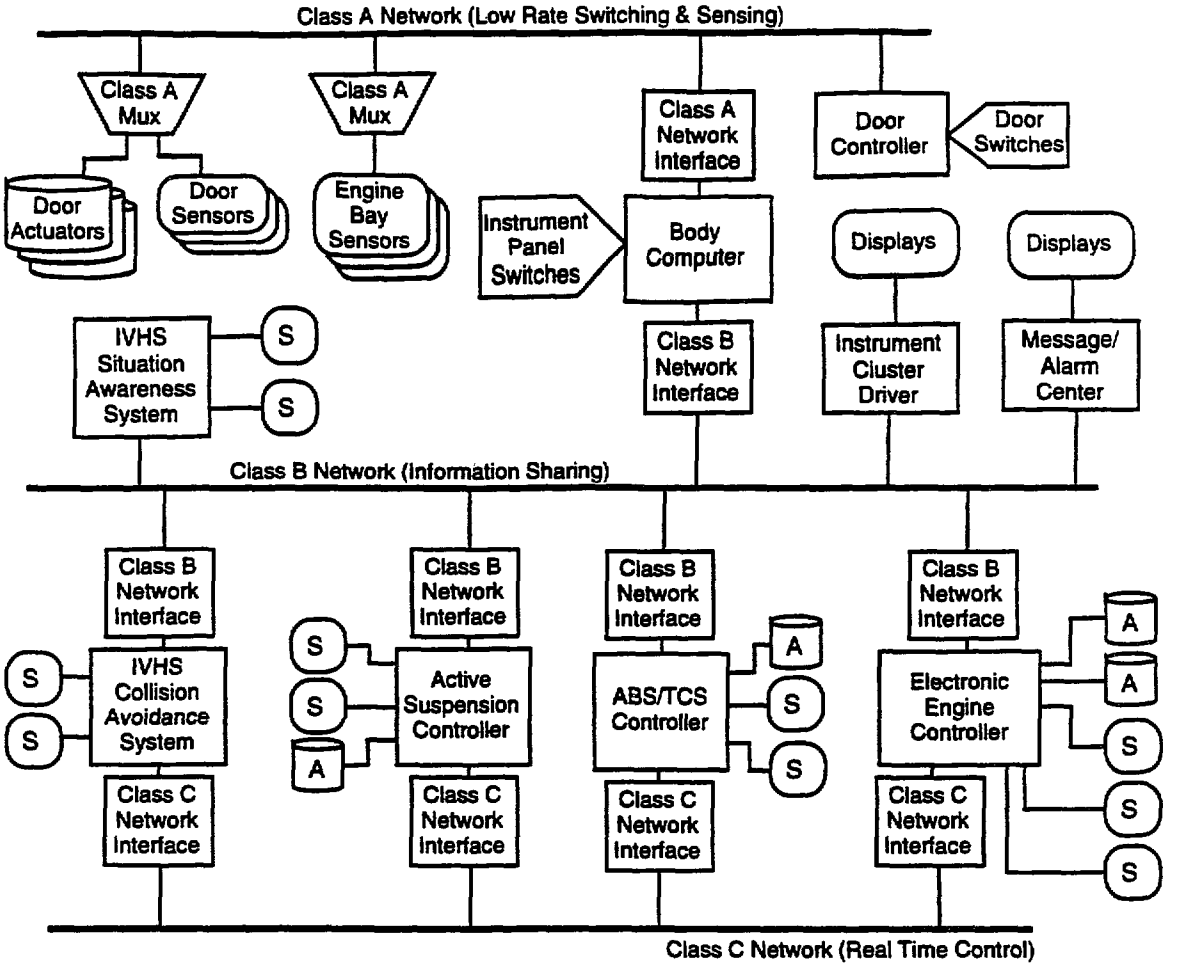

Figure 4-6: Possible Far-Term Future Automotive Network Architecture

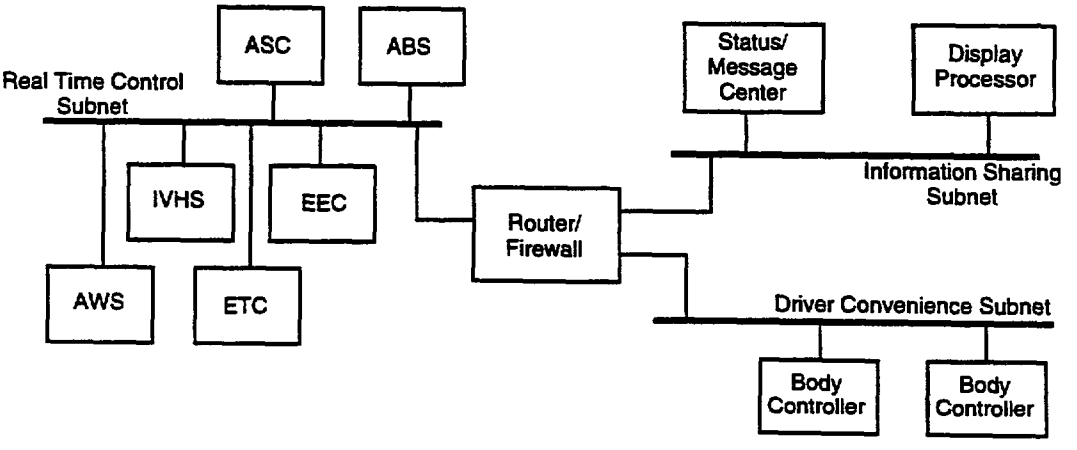

Figure 4-7: Variation on Far-Term Future Automotive Network Architecture Using Router/Firewall Concept (Network Interface Circuits Omitted for Clarity)

2. The more ambitious long-term scenario is the "all in one" network (Figure 4-8): all sensors, controllers, and actuators are directly connected to one network (or possibly a few subnets) using a standard interface. This approach allows fully distributed control, unrestricted sharing of sensors and actuators, reduced wiring complexity, and simplified adding, deleting, or moving of nodes. Any developer could, in concept, produce a new sensor, actuator, or control system and integrate it into the vehicle using the standard network interface. This approach requires a high performance, high reliability network capable of accommodating a wide range of message types and latencies. "Firewall" concepts may be needed to reduce the number and severity of failure modes. Intelligent sensors and actuators would also be required, which may impose an unacceptable cost/complexity burden. It is also not clear whether critical timing constraints can be met if a control module is separated from its sensors and actuators by a network connection.

4.6 MANUFACTURING PRACTICE

Within the domain of automotive electronics, several trends can be discerned:

1. The deployment of advanced electronic systems by suppliers such as Delco, TRW, and Bosch.

2. The development of standards-compliant silicon and logic-based electronic components by semi-conductor manufacturers such as Intel, Motorola, and Texas Instruments.

3. The development of IVHS-related systems, usually through joint efforts by OEMs, govemment agencies, system developers, and semi-conductor suppliers.

4. The development of advanced, software controlled design, manufacturing, simulation, and diagnostic tools, usually by software specialty and independent engineering firms.

4.6.1 Electronic Systems

1. This is a rather broad category that reflects the OEMs growing trend toward using intelligent electronic devices to control a wide range of vehicle functions: locks, windows, trunks, and other latching/switching functions; passenger entertainment, comfort and convenience; engine and pollution controls; ABS and traction control; active suspension; active and passive collision avoidance; driver navigation and communication; and others. These systems are generally supplied by independent or subsidiary system manufacturers such as Eaton, Delco, Hughes, TRW, Bosch, Siemens, and Kostal.

2. At present, most of the above mentioned systems are stand alone and have their own independent control modules, sensors, and actuators. However the OEMs recognize the need to begin integrating these systems, primarily driven by the need to reduce wiring, manufacturing, and maintenance costs, or comply with government regulations. There is some uncertainty as to how this integration will be achieved, but current consensus seems to be that extensive integration will not occur for another 8 to 10 years.

3. The first push for greater automotive electronic system integration will probably occur in the area of maintenance and diagnostics. Exchange of maintenance data requires fairly modest bandwidth and does not pose significant safety or reliability risks. Hundreds of vehicle status and performance parameters can be monitored and stored, either by a central diagnostic module, or by the individual

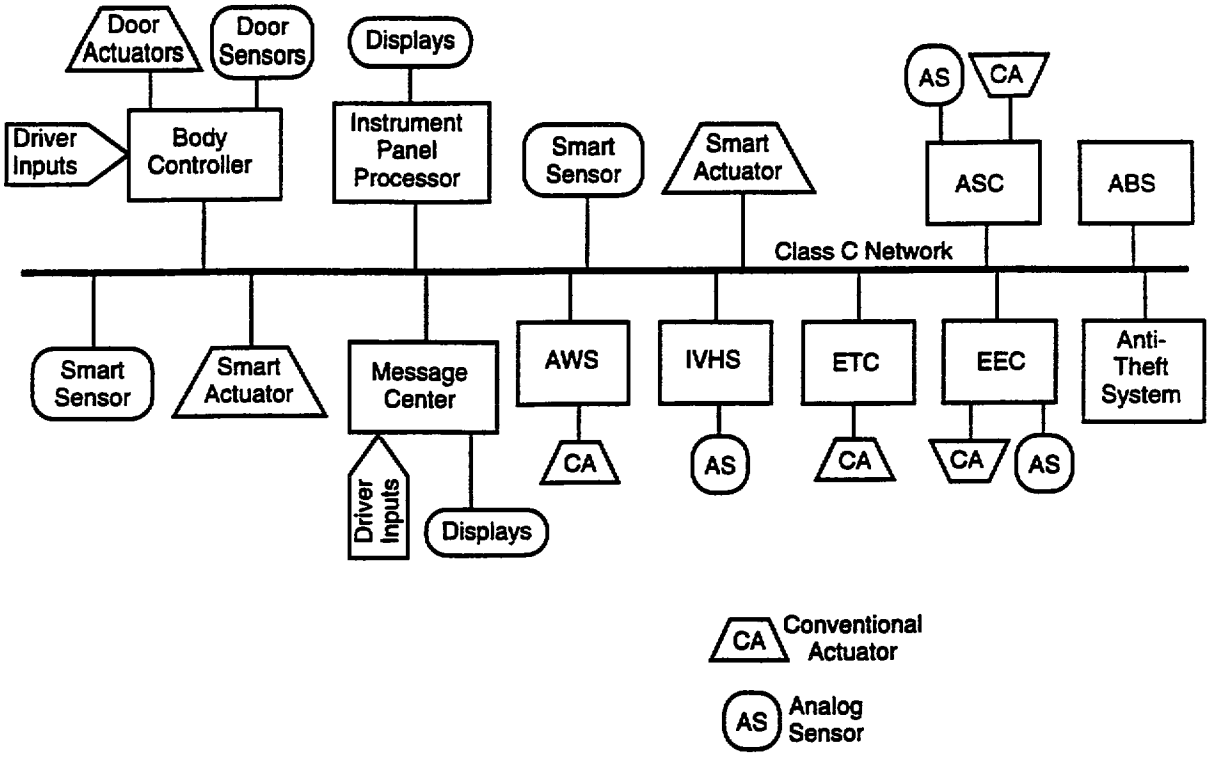

Figure 4-8: Far-Term "All In One" Vehicle Network Architecture

system control modules. This should provide significant benefits to the manufacturing process. government regulation compliance, and owner maintenance. The possibility exists that an independent maintenance shop or a private vehicle owner, using inexpensive desktop computers and software, can plug into a vehicle data port and determine the status of all major vehicle systems and components, and control these functions from the computer keyboard. This could then be evolved into more active measures, such as an IVHS system being able to intervene in the braking or engine management systems to control vehicle speed or following distance. A great deal of effort is being expended in this area and new products will be emerging rapidly over the next several years.

4. There are several potential barriers to more extensive integration of automotive electronic systems. Integration may require the interchange and coexistence of Class A, Class B, and Class C data. The standards permit the coexistence of these different data classes on the same multiplex network, but few "real-world" applications have been fielded to adequately investigate the safety and reliability issues. Class A is intended for multiplexing simple switching functions. It is used primarily to reduce wiring harness cost, or to increase driver convenience features with minimal cost increases. Class A sensors and actuators are usually connected to some sort of control or multiplexing device, rather than directly to a network. This is because there are few "smart" sensors and actuators available that can perform multiplexing and logic operations. The Class B standards have generally been used for passive data collection and non-safety critical applications. Class C is intended for "real time" applications and distributed control, but OEMs have been slow to implement it due to safety, cost, reliability, and bandwidth limitation issues.

5. It is not yet clear whether the intermingling of status and low speed/low priority data with real time, higher priority data can be successfully implemented in a reliable, mass-produced vehicle. This may require modification of the standards, or the development of a network "firewall" device to ensure that the performance of safety-critical, real time systems is not degraded by the presence of lower priority traffic or by failures in the network. There must be a high level of assurance that any failure modes do not create safety or vehicle operability problems. Until these issues are adequately resolved, it is likely that OEMs will take a cautious, incremental approach to deploying highly integrated vehicle multiplex systems.

4.6.2 Semiconductor Components

1. This category includes semi-conductor devices used for switching, amplification, sensors, actuators, application specific integrated circuits (ASICs), logic devices, communications, and microprocessor-based controllers. Organizations such as NEC, Intel, Toshiba Siemens, Thomson, TI, Harris, Phillips, Motorola, Analog Devices, Allegro, NCR, and Temic (a specialist in automotive semiconductors) predominate.

2. A large number of "off-the-shelf' silicon devices are now available for automotive applications. These vendors generally supply components to systems developers such as TRW, Bosch, Eaton, and Delco, who then use the components to build systems such as ABS, climate controls, body control, and IVHS systems. The semi-conductor vendor may not know specifically what the components are being used for, other than the interface and processing specifications. Most of the available devices conform to various OEM Class A or Class C standards, which tend to resemble SAE J1850. CAN-compliant components are widely used by German OEMs. There are few Class C-designated multiplex components available.

3. The semiconductor industry is increasingly emphasizing rapid turnaround of new ASIC and controller designs, typically on the order of 6 months. These designs are often based on existing "off-the-shelf' designs, but tailored for a specific application or OEM standard. At the physical layer of the IS0 reference model, there is a fairly high level of commonality among silicon devices. Much of the cost and time expended on new designs arises from the need to tailor the protocol handling software to meet a specific OEM's approach. Increasingly, this is being performed in "firmware" (replaceable or reprogrammable memory chips that can store computer programs) by micro-controllers, or by integrating the networking functions into the controller, rather than by customized arrangements of individual logic chips. However, once a chip set has been developed for a specific OEM, it can often be tailored to new applications fairly easily.

4. Component suppliers are actively pursuing new markets and applications, and are increasingly open to independently developing a device without initial direction and funding from an OEM or system supplier. SAE J1850 and CAN are the most frequently referenced standards, and many silicon suppliers now have extensive libraries of J1850 compliant products. Some vendors are developing standard component libraries of J1850 and CAN-compliant products (e.g., Texas Instruments) so that larger systems can be quickly fabricated from existing, certified component designs. The intent is to be able to quickly furnish J1850 components or systems using building blocks from these libraries, reducing the amount of time and custom engineering needed to bring a new product to market. Standard building blocks now exist for ABS, engine control, and body control, with new building blocks expected to be available soon. This approach is critical to the cost-effective, large-scale deployment of future IVHS and vehicle multiplex systems.

4.6.3 IVHS Systems

1. These systems fall into two broad categories: standalone, in-vehicle systems, and systems that are tied cooperatively into some type of out-of-vehicle traffic management or messaging system. Primary suppliers of IVHS systems are electronic systems developers such as TRW, Delco, Eaton, and Siemens, or small "start up" companies with limited product lines. System suppliers tend to sell to OEMs, while start ups tend to sell on the aftermarket These systems may be developed independently, or under a partnership with another supplier, an OEM, or a government agency. Funding sources are often a combination of independent R&D money and government research grants and contracts.

2. Numerous IVHS crash avoidance and traffic management systems are being deployed on a limited trial basis in various metropolitan areas, or are emerging from the development process to be sold on the aftermarket. Most of the aftermarket systems are standalone, in-vehicle devices that give passive assistance to the driver. These may include systems that monitor vehicle blind spots using either infrared, ultrasonic, or microwave technology, or driver assistance systems that give route guidance and consumer information using a combination of GPS positioning, digitized mapping software and consumer directories, and routing algorithms. Examples of such systems include:

   a. Magellan's All In View.

   b. Rockwell's Fleetmaster and Pathmaster.

   c. Delco's Telepath 100.

These systems do not currently interface with other electronic systems in the vehicle. Systems are being tested that tie the vehicle into large, external databases to provide route planning, consumer information, emergency services, and road/traffic status and management information.

3. Several active IVHS systems are being tested, but have yet to be deployed due to the significant technical challenges that must be overcome. Such systems include active breaking assistance to maintain safe following headway between vehicles, intelligent cruise control systems that can detect and respond to the presence of other vehicles, and collision avoidance systems that detect potential impending collisions and respond with steering and braking inputs. Large scale deployment of such systems may require significant advances in artificial intelligence, pattern recognition, and fuzzy logic processing technologies.

4. OEMs are taking a cautious approach to deployment of crash avoidance technologies. Uncertainties relating to cost, supporting infrastructure, government standards and regulations, and customer demand must be resolved before these systems will be deployed on a larger scale. In contrast to their usual development practices, OEMs are more inclined to enter into partnerships involving federal, state, and local governments, and industry suppliers and consultants to develop IVHS systems. This presents a strong opportunity for the federal government to coordinate industry-wide standards, concepts of operations, system architectures, and development efforts to alleviate much of the confusion, overlap, and wasted effort that often accompanies the commercial deployment of new technologies.

4.6.4 Software Controlled Design, Manufacturing, and Diagnostic Tools

1. A wide range of software based engineering tools are emerging, usually developed by independent software and engineering firms This new generation of tools typically makes extensive use of graphical interfaces and built-in code modules to perform functions such as simulation of vehicle electronics and mechanics, performing CAD/CAM design of components and systems, and analyzing or controlling engine performance. Examples of this type of software include:

   a. Mentor Graphics' System Design Station.

   b. ADI's SIMsystem, AD-LIB, EASY5x, and AD-RTS.

   c. MlL3's OpNet-based J1850 network simulation software.

2. The engine analysis and control tools are designed to interact directly with the vehicle's engine control computer using standard J1850 protocols. This provides a sound basis for extending this concept to other in-vehicle electronic systems by placing additional nodes onto the bus and new modules into the software tool. A test bed for verifying new architectures and integration concepts could be readily developed using this approach. For example, a first step may be to demonstrate an integrated, life cycle diagnostic and maintenance concept. The tool could collect status and diagnostic data from all of the in-vehicle electronic systems, analyze the data, identify anomalies, and take appropriate actions, such as contacting a maintenance facility, ordering a spare part, or informing the driver of the problem and the best course of action to resolve it.

3. After thorough verification, a simulation tool/test bed could be expanded to actively intervene with other vehicle on-board electronic systems such as ABS/TCS, suspension control, body electronics, and IVHS systems. This would prove highly useful in several respects, such as demonstrating and

testing new systems in a controlled laboratory setting, integrating new systems with existing systems, reducing development times, enhancing maintenance activities, rapidly identifying manufacturing defects, and enabling centralized, real-time collection of vehicle status information during all phases of vehicle manufacture, operation, and maintenance.

SECTION 5: SYSTEM CONCEPTS

5.1 EXISTING VEHICLE CONTROL SYSTEMS

Electronic Engine Control (EEC)

1. With the advent of electronic fuel injection and increasingly stringent emissions control regulations, EECs have been universally adopted by the major OEMs. The exact implementations vary somewhat, but the general concepts are the same. Figure 5-l depicts a typical design of an EEC. Most use an S-bit or 16-bit micro-controller to generate control signals for the ignition spark timing, throttle position, fuel injection pulses, and emissions control actuators (e.g., exhaust gas recirculator, air injector). The control signals are computed based on various engine sensor parameters such as ambient temperature, engine temperature and RPM, manifold pressure, exhaust oxygen, cylinder pressure, and intake mass air flow, and driver inputs such as throttle position. To date, few of these systems employ multiplexing to obtain sensor readings or control actuators.

2. Engine sensors typically output an analog voltage or current proportional to the parameter being sensed. The EEC may perform signal conditioning or analog-to-digital conversion, but in most cases there is no logical control of the sensor data link. Based on the sensor signal values, firmware in the ECU computes the optimum ignition spark tuning, fuel injection pulse timing and shape, and throttle position. The EEC outputs voltage pulses to the ignition module to trigger spark timing, and variable shaped voltage pulses to the fuel injectors to control the timing, intensity, and duration of the fuel injection pulses. For throttle settings, the controller converts binary control words into analog voltages using a digital-to-analog converter (DAC) and low-pass filter. The analog signal is then fed to the throttle actuator.

Anti-lock Brake Systems (ABS)

1. ABS functions as a closed loop control system to prevent wheel lock-up during hard braking (see Figure 5-2). The system uses a set of wheel speed sensors, wheel brake actuators, and a vehicle speed sensor to individually control the vehicle brakes. If the wheels begin to skid under hard braking, there is a difference between the vehicle speed and the wheel speed over the road. The ABS controller computes this difference and divides it by the vehicle speed to determine the wheel slip ratio (WSR). WSR varies between 0 (freely rotating wheel) and 1 (fully locked). Braking effectiveness is maximized at intermediate values of WSR and reduced at either extreme of WSR.

2. In general, the ABS controller uses the wheel speed sensors for both wheel speed and vehicle speed calculations. Vehicle speed can be estimated using long-term wheel speed averages from multiple wheel speed sensors. Compared to this long term average, individual wheel lock-up or spin will manifest itself as a sudden deviation from the long term average. Two-axis acceleration (lateral and longitudinal) and steering angle may also be used to aid the control algorithm. The ABS controller then attempts to modulate the WSR around some optimum intermediate value. In most ABS systems, the controller acts as a limit cycle controller, increasing or decreasing brake force around an optimum value rather than applying a constant braking force. A warning lamp on the driver's instrument panel is illuminated to notify the driver when TCS is operating.

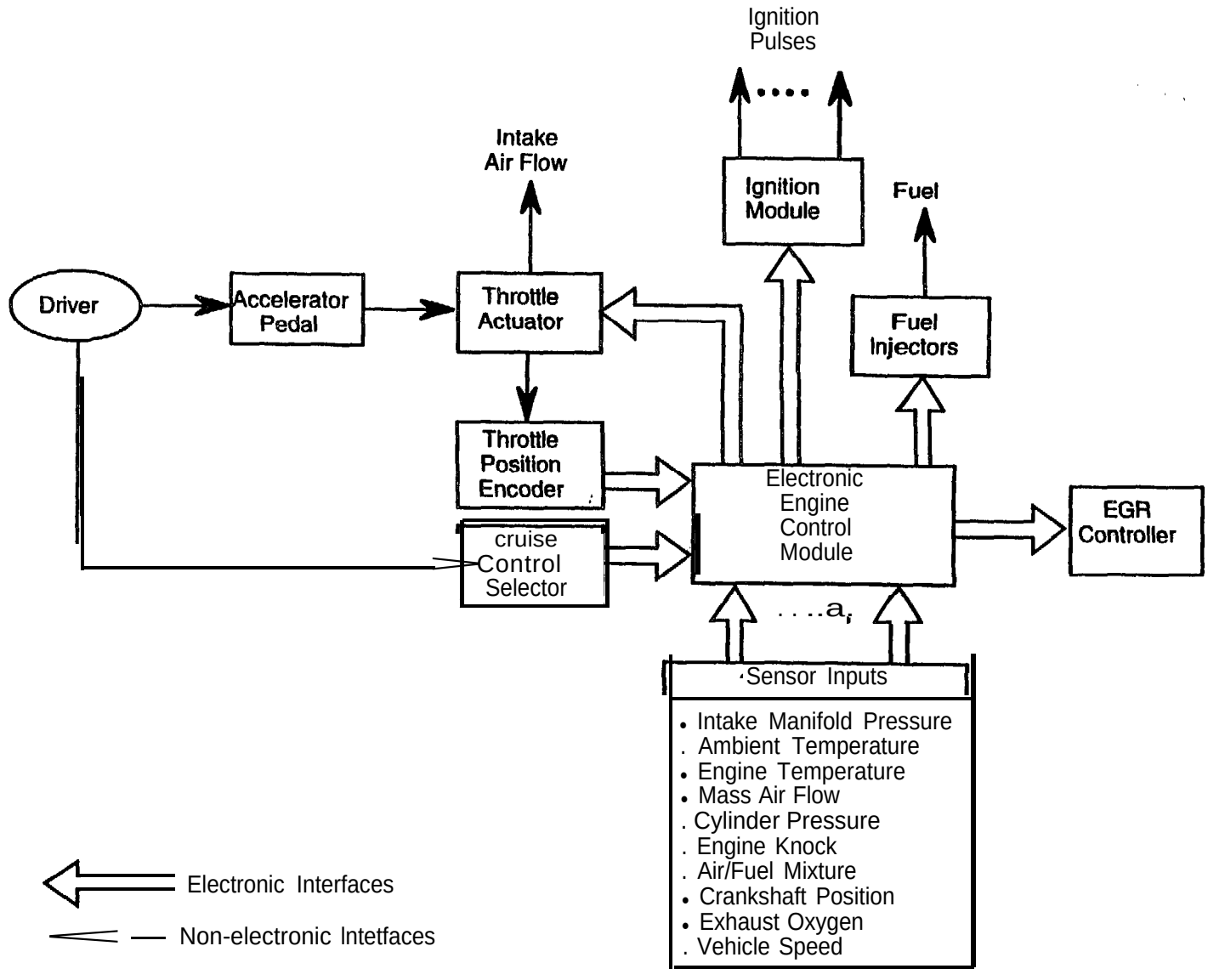

Figure 5-1 Existing Control Systems: Typical Electronic Engine control Unit

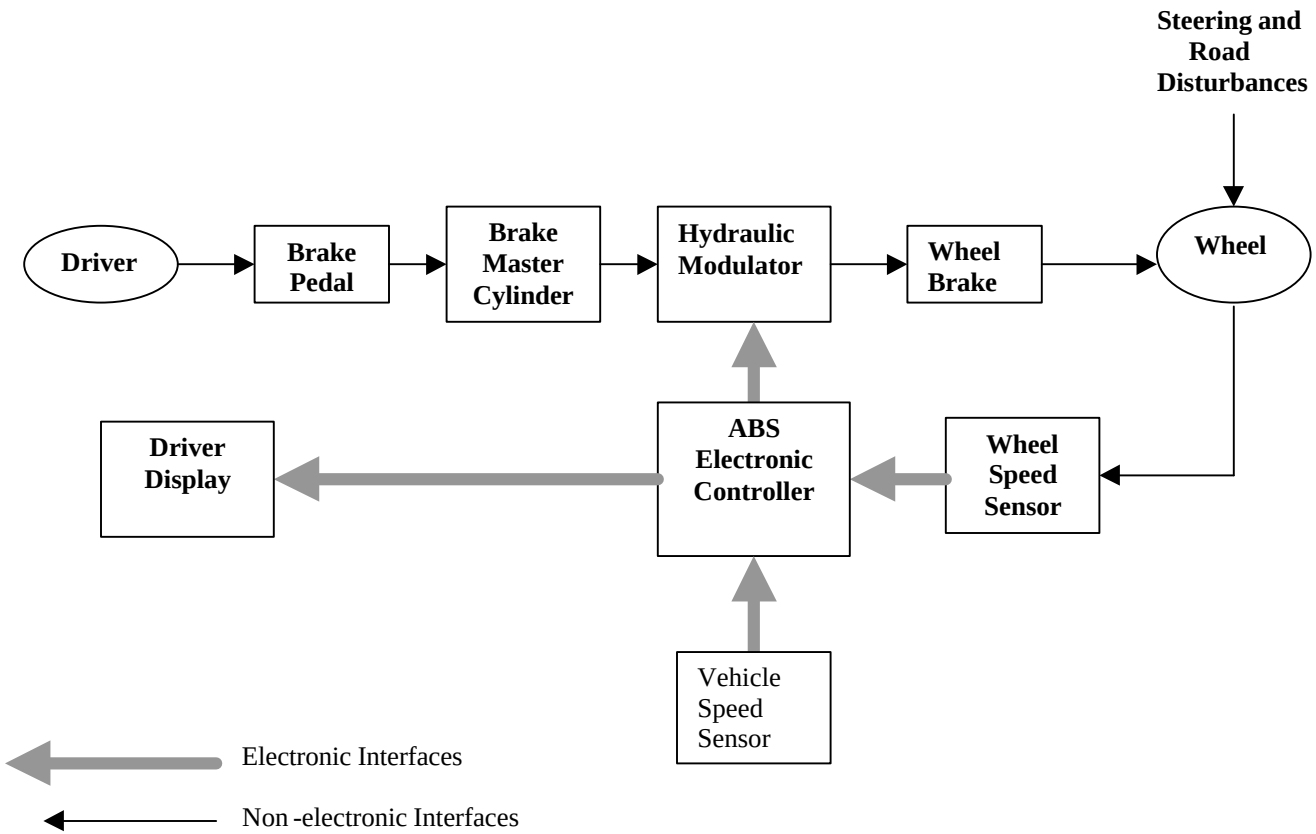

Figure 5-2: Existing Control Systems: Typical Anti-Lock Braking System (ABS)

3. Most ABS systems today use digital electronics to calculate and implement the ABS control functions. Sensors and actuators are generally analog, with direct, dedicated connections to the control module. Any required analog-to-digital or digital-to-analog conversions are performed in the control module. In vehicles that are equipped with an automatic traction control system (TCS), the TCS functions are almost always integrated with the ABS system, since the two systems are very similar.

Traction Confrol Sysfems (TCS)

1. TCS operates to limit wheel spin of the driving wheels during acceleration or steady state cruising. Several types of TCS systems have been deployed, based either on braking, engine control, transaxle control, or some combination of these. This discussion will address the case of a combined braking and engine control TCS.

2. A typical TCS monitors wheel and vehicle speed sensors to detect excessive wheel spin. This occurs when a wheel rapidly deviates from the vehicle speed average. When the controller detects excessive wheel spin (typically four per cent) and vehicle speed is below some predetermined threshold (typically in the vicinity of 30 mph), braking is applied to the spinning wheel via the ABS controller. Above the vehicle speed threshold, the TCS controller sends a signal to the EEC to either retard or interrupt ignition spark, or reduce the throttle setting so that the engine torque being applied to the spinning wheel is reduced (this torque reduction can also be accomplished by controlling the output of a variable-slip transaxle). The connection between the TCS controller and the EEC is usually a simple "on/off" voltage. The TCS controller typically updates the throttle/brake control signals every 5 ms and uses gradual on/off transitions to avoid any jerky or destabilizing inputs to the brake or throttle. A warning lamp on the driver's instrument panel is illuminated to notify the driver when TCS is operating.

3. TCS is closely related to ABS, and in most cases is designed and sold as a supplement to the ABS. These systems use most of the same sensors and actuators, and usually share a common controller. This is depicted in Figure 5-3. The TCS uses the same vehicle and wheel speed sensor inputs supplied to the ABS. Usually the same processor the calculates the ABS control response also calculates the TCS control response. The connection to the EEC is usually a high/low voltage level that is asserted at the onset of wheelspin and lowered when wheelspin ceases. It is therefore fairly straightforward to extend an ABS controller to perform TCS functions by modifying the sensor processing algorithms to detect wheel spin in addition to lockup, and adding a connection to the EEC. As with ABS, some TCS systems use steering angle and vehicle acceleration inputs to avoid being fooled by steering-induced wheel slip and road surface irregularities.

Variable Assist Sfeerlng (VAS)

1. VAS varies the amount of hydraulic boost supplied to power steering systems as a function of vehicle speed, and in some systems, steering angle. At lower speeds, the system provides more assist to make low speed, high steering angle maneuvers easier. At higher speeds, it decreases the amount of assist to provide greater stability and road feedback.

2. Mechanical/hydraulic VAS has been available for a number of years. These systems usually provide steering power assist that decreases linearly with increasing vehicle speed. More advanced

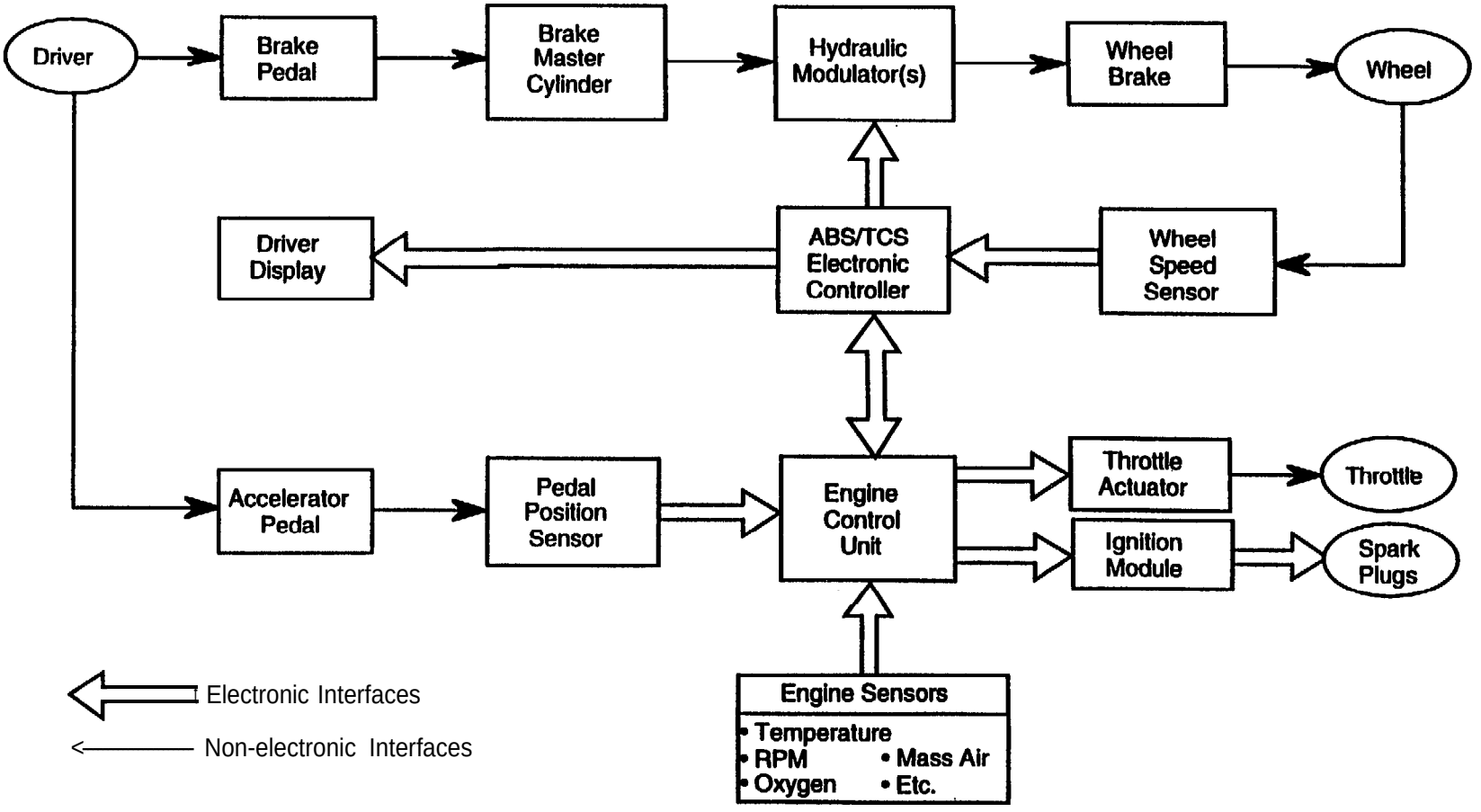

Figure 5-3: Existing Control Systems: Traction Control System Supplementing ABS

systems employ electronic speed and steering angle sensors and a micro-controller (see Figure 5-4). The controller analyzes the sensor inputs and determines the amount of steering assist needed based on vehicle speed and steering column offset angle. In general, the amount of boost increases with steering angle and decreases with vehicle speed. A control voltage is sent to the steering power control module, proportional to the amount of boost needed. this signal may control a solenoid valve that regulates the hydraulic pressure in the system.

3. VAS is usually designed as a standalone system and is not integrated with other vehicle electronic systems. VAS has fairly modest computational requirements, and could potentially be integrated with the ABS/TCS, Active Suspension, or All-Wheel Steering, which also use vehicle speed and steering angle inputs.

Lateral Stability Control (LSC)

1. Several OEMs have designed systems that improve the lateral stability of vehicles in response to abrupt steering inputs, cross winds, high speed cornering, and road surface irregularities. Such systems work to prevent or reduce skids, excessive oversteer or understeer, and excessive yaw or rolling motions. The few existing systems are found only on luxury class cars.

2. There is no simple definition of an LSC system, since a number of factors influence the lateral stability of a vehicle, and there are many ways to correct the instabilities. Factors affecting lateral stability include:

   a. Suspension compliance (unsprung weight, damping rates, and spring stiffness).

   b. Body pitch and roll resistance.

   c. Body stiffness.

   d. Lateral skid resistance (tire adhesion, camber and castor).

   e. Cornering stability.

   f. Braking capability.

   g. Steering angle, ratio, and stability.

   h. Resistance to oversteer and understeer.

   i. Front/rear weight distribution.

   j. Location of vehicle cg.

   k. Braking forces and wheel skid.

   1. Acceleration forces and wheel spin.

   m. Engine power production.

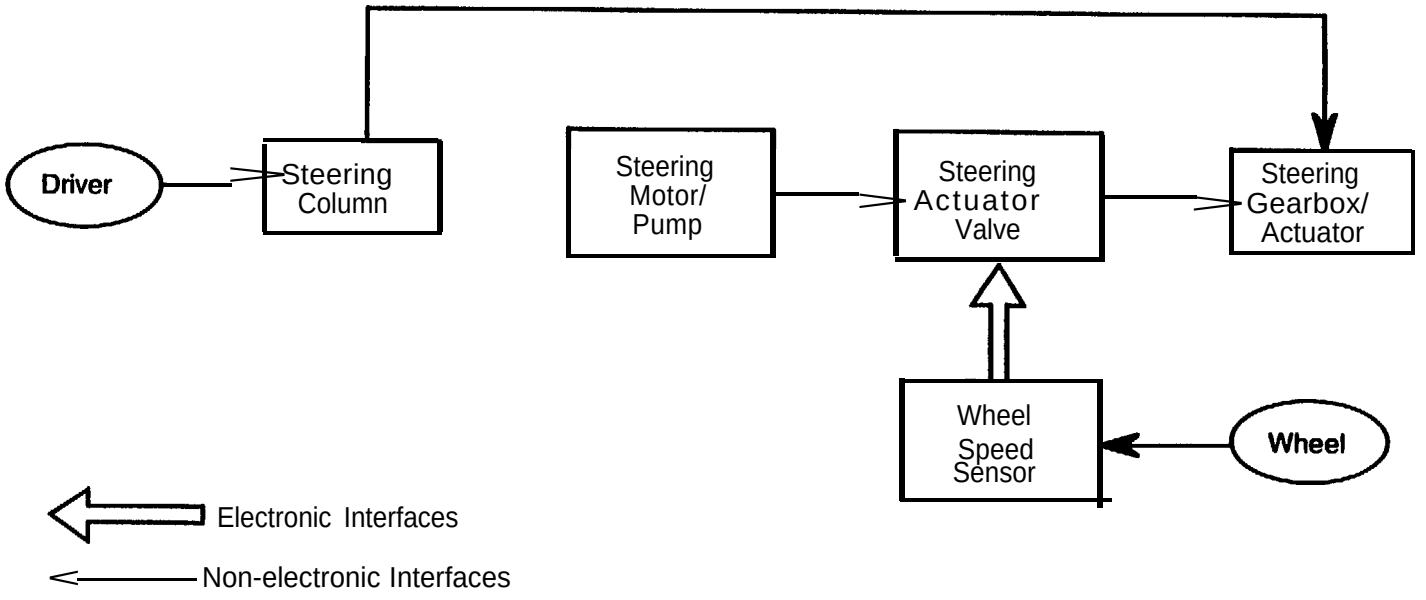

Figure 5-4: Existing Control Systems: Ford Hydraulic Variable Asslsf Sfeering

3. OEMs vary considerably as to which aspect of lateral stability control they address, and the methods used to control it. A system that sensed or attempted to correct all of the above parameters would not be feasible due to the cost, complexity, and processing burden. However, lateral stability can be improved using a number of simpler methods, either individually or in various combinations. These include:

   a. Controlling engine power output.

   b. Controlling the transaxle's allocation of torque to the driving wheels.

   c. Adjusting suspension compliance and ride height.

   d. Applying the brakes to a spinning or skidding wheel.

   e. Correcting the steering angle.

   f. Using ah-wheel steering.

4. Figure 5-5 depicts a system developed by Mercedes to control understeer and oversteer. The system integrates ABS and TCS with an electronically controlled rear-wheel drive transaxle. The ABS/TCS controller monitors lateral acceleration, yaw velocity, steering angle, and wheel spin to detect the onset of oversteer or understeer. If the rear wheels begin to slide away from the direction of the turn (oversteer), the system reduces torque output to the outside driving (rear) wheel, and applies braking to the inside undriven (front) wheel. For understeer conditions, the response is reversed: torque is reduced to the inside driving wheel,' and braking applied to the outside undriven wheel.

5. A system developed by Mitsubishi uses a somewhat different approach to controlling lateral stability. The EEC monitors vehicle speed, steering angle, and lateral acceleration. If preset thresholds are exceeded for certain combinations of lateral acceleration, speed, and steering angle, the EEC retards the ignition spark and reduces the throttle setting. This approach limits vehicle performance somewhat, but is simpler to implement than the Mercedes system.

6. All-wheel steering systems (AWS), while intended primarily to enhance vehicle cornering performance, also provide some improvement in lateral stability. Most of these systems are mechanical/hydraulic. However, Toyota has developed an AWS that provides electronic control at higher vehicle speeds and mechanical control at lower speeds (see Figure 5-6). At low speeds, a linkage from the front steering rack rotates a cam in the rear steering hydraulic system. This causes the rear wheels to turn in the opposite direction of the front wheels, improving low speed maneuverability. At higher speeds, the mechanical system disengages and the electronic controller takes over. The controller monitors sensors for yaw, vehicle speed, and wheel speed. When certain thresholds are exceeded that indicate excessive lateral motion, the controller commands a stepper motor, which actuates a valve in the rear steering hydraulics. The rear wheels are consequently steered in a direction that counteracts the lateral slip. This improves vehicle lateral stability during strong cross winds, fast cornering, and rapid side-to-side steering transients.

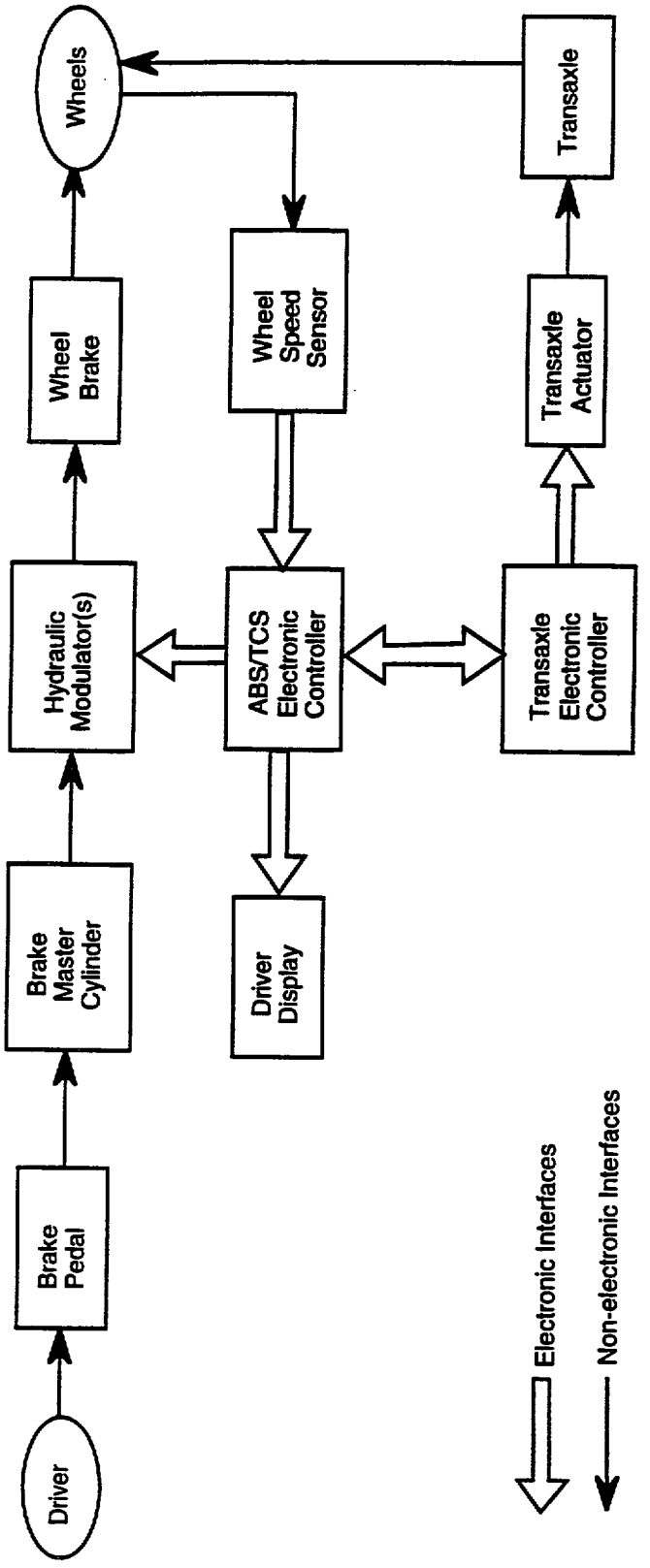

Figure 5-5: Existing Control Systems: Mercedes Lateral Stability Control System

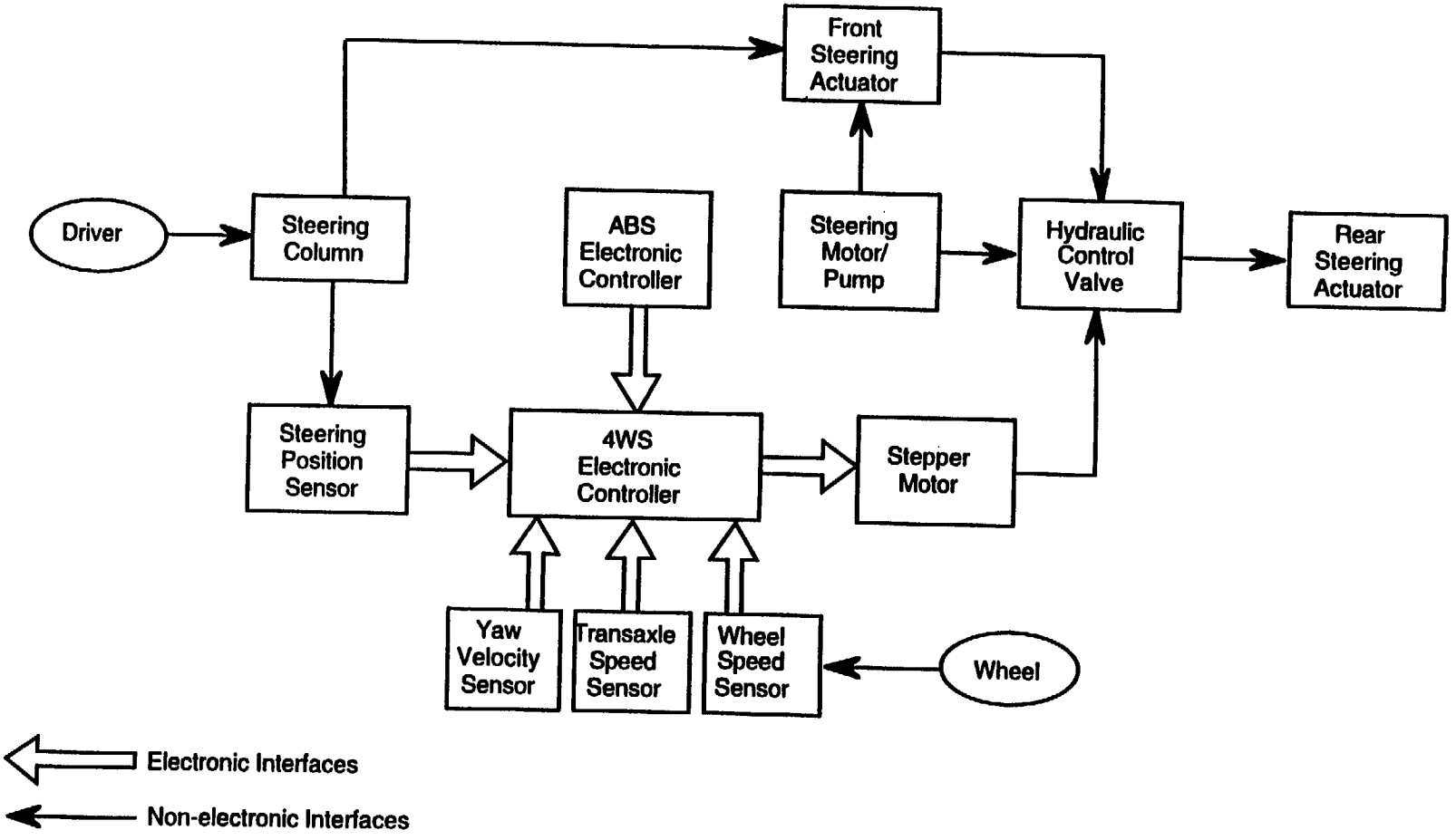

Figure 5-6: Existing Control Systems: Toyota Four Wheel Steering System

Active Suspension Control (ASC)

1. Active suspension systems allow the vehicle's suspension spring and damping rates and ride height to adapt to varying road and driving conditions, thereby improving vehicle stability, maintaining an optimum vehicle attitude, and improving passenger comfort. A number of mechanical/hydraulic systems have been developed, but have gamed only limited acceptance due to their weight and limited performance capabilities. Several electronic active suspension systems have appeared in recent years, mostly on luxury class cars. An example is shown in Figure 5-7.

2. In fully active suspensions, all suspension actions are under the control of actuators. Without these actuator inputs, the suspension will not respond to an applied load. In semiactive suspensions, the springs and dampers operate around pre-determined baseline rates until a controller modifies them. The suspension can operate without controller inputs, but performance is enhanced by the controller intervention. In either type of system, there may be an interface through which the driver can select different levels of spring and damping rates depending on individual preferences for comfort versus performance.

3. Active suspensions may employ sensors that detect ride height (possibly at each wheel or at the front and mar), steering angle, vehicle speed, and vertical and lateral acceleration. For real tune control, the system must respond to loading inputs within approximately 10 ms; suspension disturbances typically have a maximum spectral component of approximately 25 Hz, thus suspension updates must occur at twice this rate or higher, equating to 20 ms. Some types of suspension actuators (air compressors, hydraulic rams) are too slow to meet this timing constraint, and cannot respond to every individual suspension disturbance. An acceptable alternative is to compute a sliding window average for spring and damping rates, based on the average suspension load for that time window. The updates can be made at whatever rate the actuator can support. Another option is to drive the actuators directly from the sensors, bypassing potential delays from communications protocols and control processing. For example, a ride height sensor may output a voltage inversely proportional to ride height; this voltage may be directly applied to a compressor that inflates or bleeds pneumatic shock absorbers in response to changes in vehicle ride height and time-averaged suspension loads.

4. Other ASC systems use a microprocessor-based controller to monitor the sensors and compute optimum suspension rates. This is more feasible for electro-mechanical actuators such as solenoid valves, which have faster response times. The system may respond in real time to individual road disturbances and braking or steering inputs (needed for fully active systems),,or it may compute sliding average values. The latter approach is more typical of semiactive systems.

5. The most commonly used actuators for active suspension are: air compressors to adjust air spring rates; solenoid valves to control shock absorber damping orifices; and hydraulic systems, consisting of pumps, accumulators, and rams, that adjust the vehicle ride height. As with most existing real time automotive control systems, there is little networking or multiplexing of active suspension sensors, controllers, and actuators.

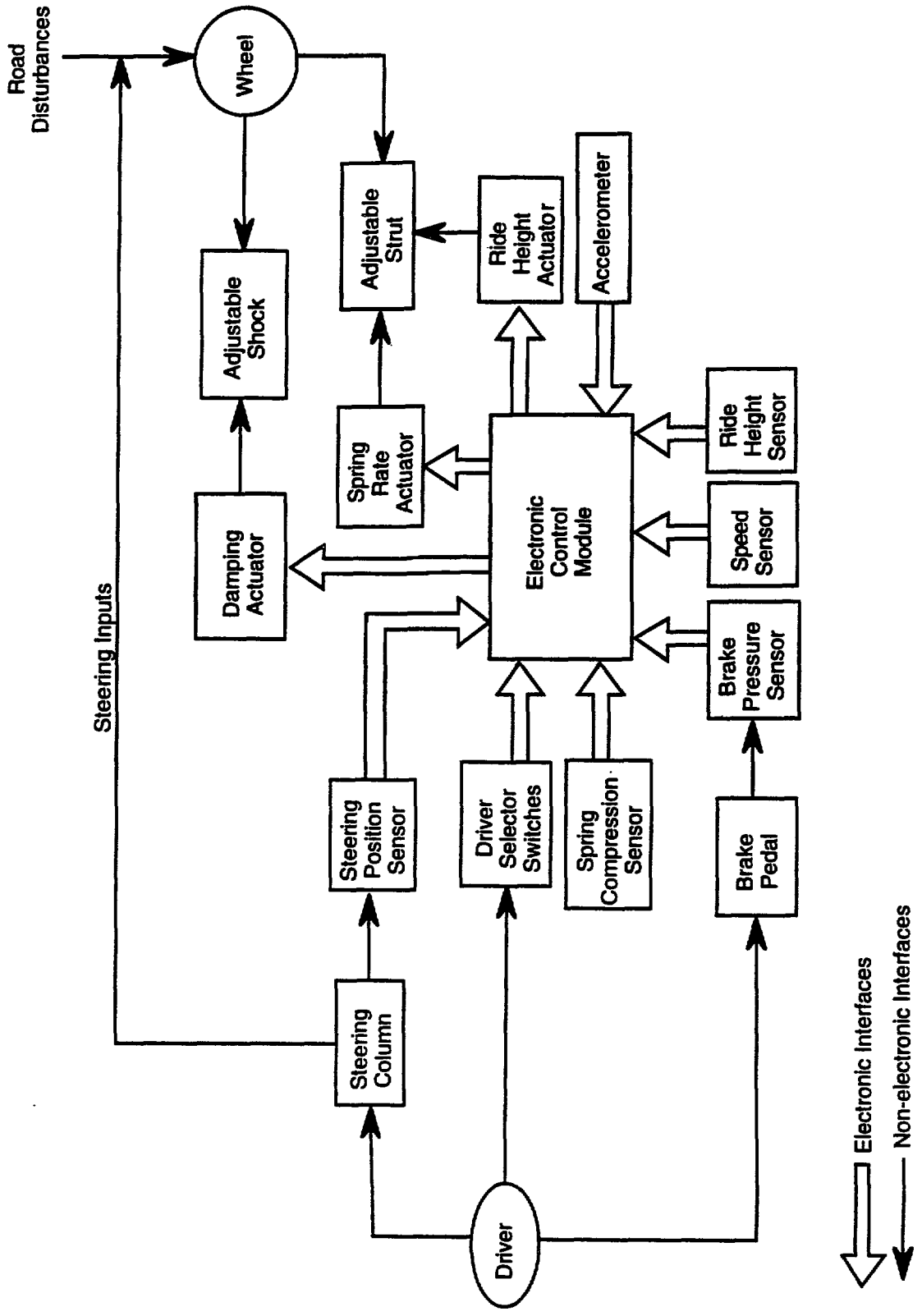

Figure 5-7: Existing Control Systems: Active Suspension System

1. The automotive control systems discussed above present significant opportunities for integration, both with each other and with future IVHS safety systems. They employ many of the same types of sensors and actuators, have similar timing and reliability constraints, and do not present overly demanding processing loads to modem microprocessors. This could provide significant cost and weight savings by eliminating redundant processing power and sensors, and reducing vehicle wiring complexity. Integration of these systems could also optimize the overall performance of the vehicle by coordinating the actions of independent systems so that they do not counteract or overlap each other.

2. An example of an integrated chassis system is depicted in Figure 5-8. This figure is based on a Toyota luxury class vehicle, and shows fairly extensive integration using Class B networking. Three chassis systems (active suspension, four wheel steering, and ABS/all-wheel drive) are integrated with the engine/transaxle controller and the instrument cluster using a J1850 type of protocol (SAE 930002). The sharing of sensor information by the control modules is shown in Table 5-l.

3. Based on processor loading, failure modes, and the types of information shared, the ABS control was combined with the 4 WD, and the engine control was combined with the transmission control. The resulting five-node network (including the instrument cluster controller) employed a J1850 protocol operating at a 41.6 kbps clock speed. The network was connected in a loop, providing each node an alternate transmission path to protect against a cut bus wire or loose termination. Simulation revealed that a network utilization above 50% led to drastic increases in message latency (this is consistent with the simulation results discussed previously). Utilization was therefore limited to 40% to maintain an average network latency of 0.33 msec and a total transmission time average of 3 ms. This delay is acceptable for most real time control needs. This system can be seen as a hybrid Class B/C network, since no control messages are sent over the network, but sensor information used for real time control processing is sent. Also note that the safety of the vehicle is not seriously affected if the network fails; engine, brakes, and steering will continue to function.

5.2 IVHS IN-VEHICLE SAFETY SYSTEMS: OVERVIEW AND ASSUMPTIONS

1. This section identifies and characterizes a number of potential IVHS in-vehicle safety systems that may be candidates for network integration. Some of these systems already exist in stand-alone form, while others are still in the conceptual stage. Based on NHTSA/OCAR programs and research activities, in-vehicle IVHS safety systems are categorized as follows:

   a. Situation awareness.

   b. Collision warning.

   c. Collision avoidance.

   d. Collision response.

   e. Data collection.

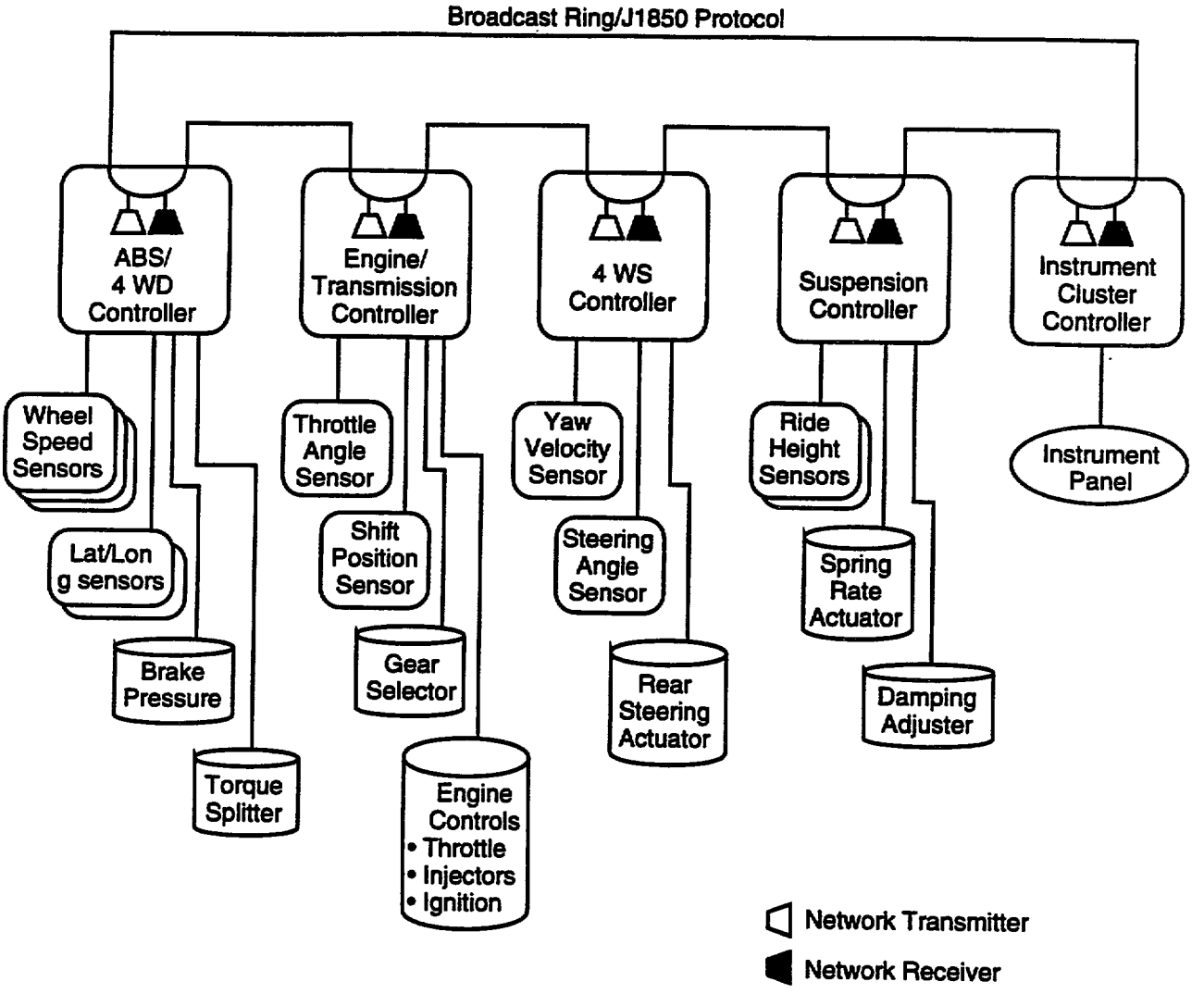

Figure 5-8: Network Architecture for the Toyota I-Four Integrated Control System

Table 5-1: Sharing of Sensor Information In the Toyota Integrated Chassis Control System

	Control Systems					
Sensor Data	**Active Suspension**	**4 WS**	**ABS**	**4 WD**	**Engine**	**Transmission**
Suspension Travel	X					
Steering Angle	X	X		X		
Lateral g's			X	X		
Longitudinal g's			X	X		
Yaw Velocity		X	X	X		
Wheel Speed		X	X	X		X
Throttle Angle	X		X	X	X	X
Shift Position		X		X		X
Suspension Status	X				X	
4WS Status		X	X	X		
ABS Status	X	X	X	X	X	
4 WD Status	X	X		X		

2. Categories (d) and (e) were created specifically for this study, but are closely related to NHTSA research topics. Based on these five categories and NHTSA program priorities, 14 systems were initially identified as candidates for network integration. For the purposes of this study, a system is assumed to require, at a minimum, a sensing device that can produce some quantifiable output related to the traffic/vehicle environment; a processor/controller to control the sensor and interpret the sensor readings; and a driver interface to allow the driver to control the system and receive information from it. For convenience and design simplification, an Advanced Driver Interface (ADI) module has been assumed to exist, and provides a single module interface to the driver for all M-IS-related inputs and displays. Some capability for distributed control is also assumed for some of the far-term scenarios where an IVHS system may need to request vehicle chassis system responses from other control modules such as braking or steering corrections.

3. Based on an assessment of each system's information needs for algorithm processing and actuator control, system block diagrams and data flows were developed, employing automotive networking concepts where feasible. The system categories, block diagrams, data flows, and information needs worksheets are presented and discussed below. The appropriate network interface circuitry is assumed to exist within each control module, but has not been shown explicitly for greater drawing clarity. The heavy horizontal line in the system block diagrams represents a data bus, which may be either a length of copper or fiber optic cable, or a connector hub. Again for drawing clarity, each individual wire is not shown; the bus and local connections may be a single cable, twisted pair, a coaxial cable, or a fiber optic cable, depending on which networking standard is used. The network traffic tables are summarized from the information needs worksheets and assumptions presented below.

Information Needs Worksheets

1. The existence or specific capabilities of the sensors and actuators listed in the information needs worksheets was not addressed. It was assumed that such devices exist (or will exist when they are needed) and are capable of providing the needed data samples at the specified resolution and accuracy. It is also assumed that the sensed data sample is converted into a binary word through an analog-to-digital conversion (ADC), either at the sensor, control module, or network interface.

2. The worksheets show that the network traffic loads and timing constraints can vary widely, but that real time control tends to dominate both the bandwidth and latency needs. Table 5-2 summarizes the traffic loads of the proposed IVHS systems in terms of overall traffic and Class C real time traffic. The volumes of Class A and Class B traffic are quite small in all but two of the systems, and place low demands on the candidate networks.

3. Some of the proposed systems require a large number of networked nodes to be supported (DC-l, for example), while others have only a few nodes. This suggests that a network standard must be capable of supporting a wide range of network sizes and loads, and be capable of supporting future growth. Support for 32 nodes seems reasonable, plus possibly support for several subnets within each individual node.

4. Even by themselves, these systems require support for at least 20 different message types/priorities. Other in-vehicle integrated control systems have been proposed that require nearly 100 message types. For future, highly integrated systems, this number could exceed 200 message types, requiring at least 8 bits to encode the message type/priority field in binary format Most existing standards satisfy this requirement It is also apparent that a variably-sized data field capability is useful, since the types of data vary widely in the number of bits needed for data quantizing.

Table 5-2: Summary *of Network Trafffc Loads for the Proposed IVHS in-vehicle safety Systems. Assumes 48 bits of overhead per message*

systems	Reel Time Traffic, bps (Data Only/Data+Overhead)	Total Traffic, bps (Data Only/Data+Overhead
SA-1: Proximity Detection	1600/J6400	1830/7322
SA-2: Headway Detection	1600/6490	176317053
SA-3: Automobile Diagnostics		72/418
SA-4: Driver Diagnostics	4400/26.000	4439126,274
CW-1: Road Departure Warning	3600/20.400	3635120,646
CW-2: Headway Detection	166416656	179517181
CW-4: Lane Change and Merge	3200/17,600	3235117,846
AC-1 : Autonomous Cruise Control	8960143,520	9130144,712
AC-2: Collision Avoidance		16,195/94,166
CR-2: Automated Collision Notification		4853/14,587
DC-1 : Collision Data Recorder		13.918/50,763

Assumptions for Network Data *Traffic Load Calculations*

The information needs spreadsheets for each of the identified IVHS systems were used to provide a reasonable estimate of network traffic loading that the proposed systems would Impose To arrive at these estimates, the following guidelines were used:

1. Nyquist sampling theorem applies:

   a. Sensors for control inputs are measuring analog processes.

   b. Analog processes must be sampled at twice their maximum spectral content,

   c. Sampling quantization errors and sensor resolution limits are neglected.

2. SAE J2178 application layer guidelines, when available, apply for sensor parameter units, resolution, and encoding requirements.

3. Real time control requires higher samoling/control input rates:

   a. Minimum end-to-end network latency requirement is 4 msec for real time control.

   b. All control modules have a network connection and can send sensor data to the network.

   c. Real time control conesponds to Class C data, requires minimum sampling rate of 100 sps.

4. Sensor information not used for real time control is Class B, with minimum sampling rate of 5 sps. Sampling rates below 5 sps are Class A.

5. The ABS system supplies the information on vehicle speed used for control processing:

   a. Worst case for vehicle speed calculations: 13" wheel rims, 155/80 series tires, yields 6 feet of vehicle travel per tire revolution.

   b. ABS must operate over speed range of 4.1 mph (6 fps) to 120 mph (176 fps).

   c. Wheel sensor has 100 pulses per revolution.

   d. Maximum rate for speed calculation is 10 msec; minimum rate is 0.233 msec (rate depends on vehicle speed).

   e. For network loading calculations, assume ABS sends speed message to network 100 tunes per second.

6. Three-axis acceleration limits for normal driving are 1 g's when resolved into orthogonal components, with maximum spectral content of 25 Hz. 50 Hz sampling rate is therefore required.

7. For crash sensors, maximum g's can reach 10 g, with spectral content of 100 Hz, assume 200 samples per second.

8. For sensors measuring headway, assume maximum closing speed of 204.5 mph (300 fps), resolution of 1 fOOt (0.3 m), neglecting sensor resolution limits. Therefore sampling rate of 300 per sec. is required.

9. For blind spot Proximity measurements, assume maximum closing speed of 50 fps (35 mph), 0.5 ft resolution required, therefore 100 samples per sec.

10. Other sampling rates:

    a. For status monitoring of dynamic systems, assume 50 per sec.

    b. For status monitoring of static/non-safety critical systems, assume 1 per sec.

    c. Other signals:

        (1) ABS pressure modulator: 200 sps.

        (2) Cruise control: 20 sps.

        (3) Steering position: 200 sps.

        (4) Steering control: 200 sps.

        (5) Engine REM: 50 sps.

        (6) Transmission gear position: 10 sps.

        (7) Driver inputs and displays: 1 sps.

Protocol Assumptions

To determine the goodness of fit between a proposed system and a candidate networking protocol, the following assumptions were made:

1. Minimum data field size is 8 bits (1 byte), regardless of data type, resolution, or encoding method.

2. Fields containing message type and data are non-overhead, and used by application layer.

3. All other fields are overhead, including bit stuffing and inter-frame separators.

4. Real-time control does not require Acks or retransmits. Control system can continue to operate using previous sample until an unerrored update is received.

5. On/Off requests from one system to another require application layer Acks.

6. If more than 8 bits are required to encode a data sample, assume the data field size increases to 2 bytes (16 bits).

7. Data field size always increases in 1 byte increments for variable data field protocols.

8. If the number of bits needed to encode the message type/priority are added to the maximum number of bits needed to encode a data sample, and result is between 10 and 16 bits, then assume a combined data/message type field size of 16 bits.

9. Status monitoring is passive; no polling (except driver requests), no Acks.

10. Network utilization includes all bits sent, including overhead, acknowledgments, and retransmissions; effective data throughput includes only non-overhead bits received at the application layer.

11. For traffic estimates, 48 bits of overhead per message are assumed (typical for automotive protocols).

5.3 IVHS IN-VEHICLE SAFETY SYSTEMS: SYSTEM SPECIFICATIONS, DATA FLOWS, AND INFORMATION NEEDS

Situation Awareness

1. These systems are intended to enhance the driver's perception of the road and traffic environment through visual or audible feedback directly to the driver. Under certain conditions such as rain, snow, fog, darkness, oncoming headlights, or driver distraction, the driver's visual perception may be restricted. These systems are designed to assist the driver's decision making process and enhance his/her ability to anticipate and avoid potentially hazardous situations. They operate on a time scale that is commensurate with a driver's natural response times to changes in traffic and driving conditions, which may range up to several seconds or more.

2. The following situation awareness systems were identified for network integration evaluation:

   - SA-1. Proximity detection system (Figures 5-9, 5-10, and 5-11): monitors the driver's blind spots for obstacles that affect safe lane changes and low speed backing maneuvers. Relative velocities are typically less than 10 mph. Ultrasonic-based systems have a range of typically 16 ft, while radar systems may extend to 50 ft. Video systems provide more information to the driver, but require more driver attention and do not provide suitable outputs to in-vehicle electronic control systems.

   - SA-2. Headway detection system (Figures 5-12 and 5-13): warns the driver when speed-appropriate following distances are violated. This requires both longer range (to approximately 300 ft) and narrower field of view than a proximity system. These systems can be programmed to provide speed-dependent audio/visual warnings or distance readouts.

   - SA-3. Automobile diagnostic system or safety monitoring system (Figures 5-14, 5-15, and 5-16): provides automated monitoring and diagnostics of key safety related systems and components, such as tire pressure, brakes, air bags, etc. Warns driver when safety-related systems may not be functioning properly.

   - SA-4. Driver diagnostics (Figures 5-17, 5-18, and 5-19): potentially monitors the driver's alertness, sobriety, and performance using either direct psycho-physiological measures or indirect vehicle performance measures.

Category: Situation Awareness

System Proximity Detection System

Total Network Traffic	
4 ms latency	900 bps/100 mps
10 ms latency	42 bps/14 mps
25 ms latency	
100 ms latency	0.1 bps/O.1 mps
500 ms latency	0.3 bps/O.3 mps
Total	942.4 bps/l 14.4 mps
#Transmittina Nodes	4
# Message Types	7
Traffic Allocation (by Node)	
1	12.2 bps/1 .3%
2	900 bps/95.5%
3	0.2 bps'-
4	30 bps/3.2%

System Architecture

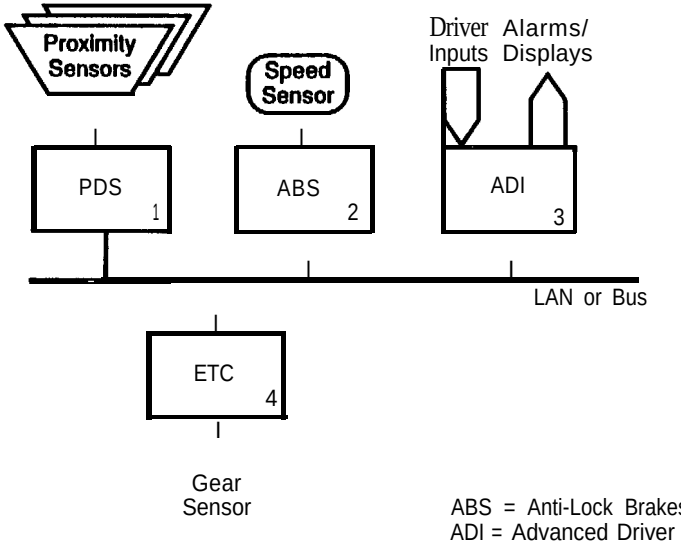

ABS = Anti-Lock Brakes
ADI = Advanced Driver Interface
ETC = Electronic Transaxle Controller
PDS = Proxlmity Detection Sys.

Protocol Requirements Summary

Non-overhead bits needed:	12; use 16 bit data/msg type field
Minimum data rate:	1930.4 bps
Nodes lo support::	4
Source nodes:	4
Message types:	7
Latency allocation:	4 ms: 95.5%, 10 ms: 4.5%, 100 ms: <0.1%, 500 ms: <0.1%
Ack. needed:	Yes

Issues

- Network traffic load Is modest
- Majority of traffic is low latency; network should be lightly loaded
- Failure modes must be benign to ABS and ETC
- Data concurrency not critical

Figure 5-9: System Specification Worksheet for SA-1

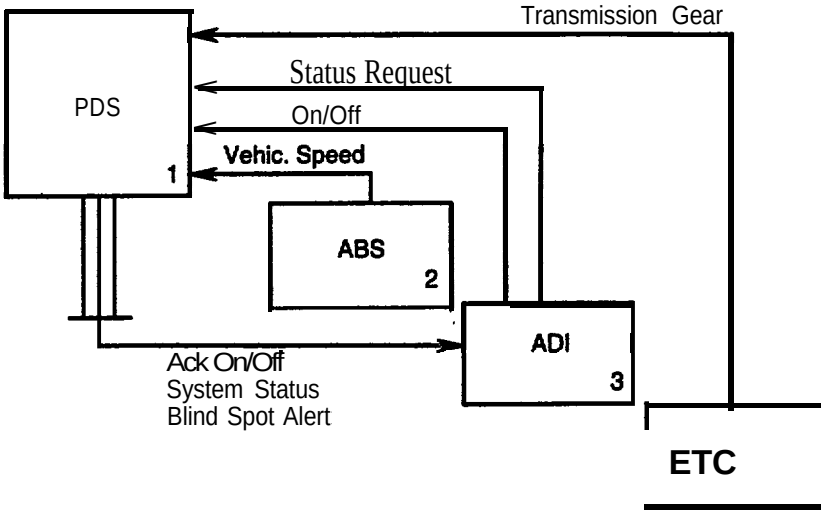

Figure 5-10: Data Flows* for *SA-1

Category: Situation Awareness

System: Proximity Detection System

Information Category	Parameter	Units	Resolution	Format (1)	Bits Needed	Class (2)	Frequency(3)	Safety Priority	Latency Bound(4)	Data Rate (bps)	Data Sharing From/To
Sensor Information	Transmission Gear	–	8 states	SE	3	B	10	M	10	30	ETC/PDS
	Vehicle Speed	m/s	0.1 m/s	BCD	9	C	100	M	4	900	ABS/PDS
	Obstacle Location	–	6 states	SE	3	B	100	M	10	300	(local)
	Obstacle Distance	m	0.1 m	BCD	8	B	100	M	10	800	(local)
Actuator Responses											
Driver Inputs	System On/Off	–	1 Of 2 states	SE	1	A	0.1	L	500	0.1	ADI/PDS
	Status Check	–	1 Of 2 states	SE	1	A	0.1	L	500	0.1	ADI/PDS
Driver Feedback	On/Off Ack	–	on/off	SE	1	A	0.1	M	100	0.1	PDS/ADI
	System Status	–	on/off	SE	1	A	0.1	M	500	0.1	PDS/ADI
	Blind Spot Alert	–	on/off	SE	3	B	4	M	10	12	PDS/ADI

1. BCD = Binary Coded Decimal; BCI = Binary coded Integer; BM = Bit Mapped; SE = State Encoded; UAD = Unscaled Analog to Digital
2. Class A = Sensor sharing/body wiring reduction; Class B = processor information sharing (measured or derived); Class C = real time control
3. Messages per Second; I = Infrequent, approximate as 1 per sec.
4. End-to-end latency in msec. Latency is interpreted as the total time between sensing of a parameter and the initiation of appropriate control responses. Network latency is a subset of end-to-end latency.

Figure 5-11: Information Needs Worksheet for SA-1

Figure 5-12. System specification work sheet for SA-2

Category:_____

System: **Headway Warning System**

Total Network Traffic	
4 ms latency	900 bps/100 mps
10 ms latency	80 bps/ 10mps
25 ms latency	-
100ms latency	0.1 bps/0.1 mps
500 ms latency	0.1 bps/0.1 mps
Total	980.2 bps/110.2 mps
# Transmitting Nodes	3
# Message Types	5
Traffic Allocation (by Node)	
1	80 bps/8.2%
LAN or BUS 2	900 bps/91/8%
3	0.2 bps/<0.1%

System Architecture

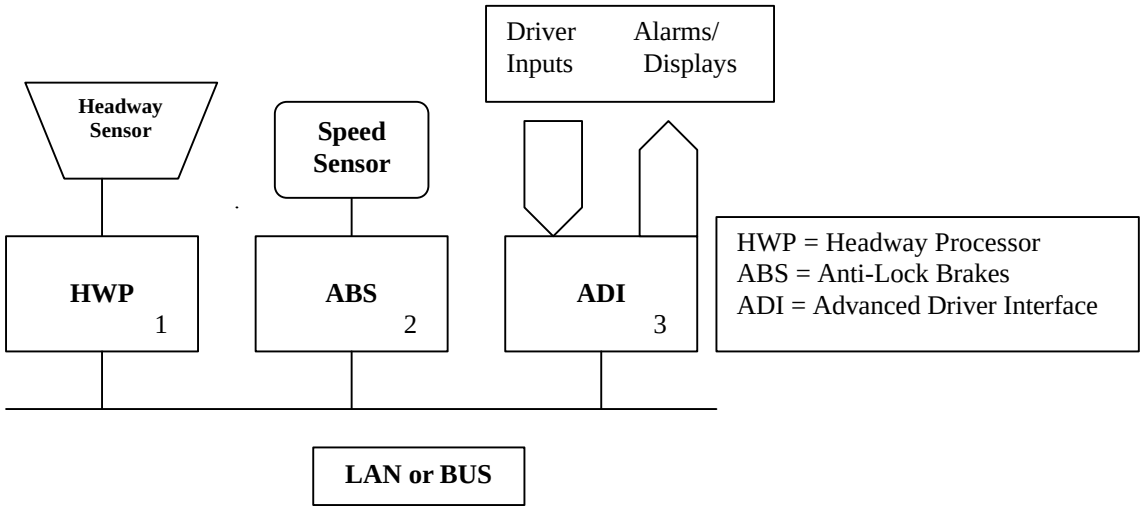

Protocol Requirements Summary

Non-overhead bits needed: 12 (use 16 bit data/msg type frame)
Minimun Data Rate: 1763.2 bps
Nodes to support: 3
Source nodes: 3
Message types: 5
Latency allocation: 4 ms: 91.8%, 10 ms: 6.2%, >25ms:negl.
Ack. Needed: Yes

Data Flows

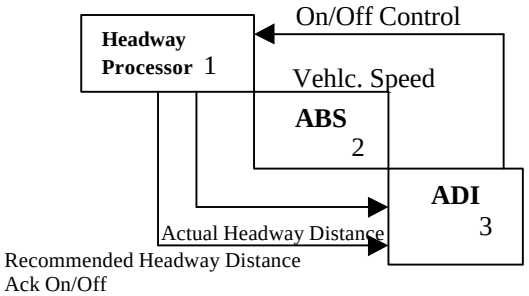

Issues

- Network traffic load is modest; could be integrated with other networks or systems
- Majority of data is low latency; requires network loading
- Failure modes must be benign to ABS

FIGURE 5-12: System Specification Worksheet for SA-2

Category: Situation Awareness

System: Headway Detection System

Information Category	Parameter	Units	Resolution	Format (1)	Bits Needed	Class (2)	Frequency(3)	Safety Priority	Latency Bound(4)	Data Rate (bps)	Data Sharing From/To
Sensor Information	Headway Distance	m	o.1 m	BCD	11	B	300	M	10	3300	(local)
	Vehicle Speed	m/s	0.1 m/s	BCD	9	C	100	M	4	900	ABS/HWP
Actuator Responses											
Driver Inputs	On/Off	–	1 0f 2 states	SE	1	A	0.1	L	500	0.1	ADI/HWP
Driver Feedback	Actual Headway Distance	ft	1 ft	BCD	8	B	5	M	10	40	HWP/ADI
	Recommen. Headway Dist.	ft	1 ft	BCD	8	B	5	M	10	40	HWP/ADI
	Ack On/Off	–	on/off	SE	1	A	0.1	L	100	0.1	HWP/ADI

1. BCD = Binary Coded Decimal; BCI = Binary Coded Integer; BM = Bit Mapped; SE = State Encoded; UAD = Unscaled Analog to Digital
2. Class A = Sensor sharing/body wiring reduction; Class B = processor intormation sharing (measured or derived); Class C = real time control
3. Messages per Second; I = Infrequent, approximate as 1 per sec.
4. End-to-end latency In msec. Latency is interpreted as the total time between sensing of a parameter and the initiation of appropriate control responses. Network latency is a subset of end-to-end latency.

Figure 5-13: Information Needs Worksheet for SA-2

Category: Situation Awareness

System: Safety Monitoring System

Total Network Traffic	
4 ms latency	–
10 ms latency	–
25 ms latency	–
100 ms latency	45.1 bps/7.1 mps
500 ms latency	10.4 bps/0.1 mps
Total	55.5 bps/7.2 mps
# Transmitting Nodes	8
# Message Types	9
Traffic Allocation (by Node)	
1	5 bps/9%
2	5 bps/9%
3	0.1 bps/0.18%
4	5 bps/9%
5	10.4 bps/18.7%
6	5 bps/9%
7	5 bps/9%
8	20 bps/36%

System Architecture

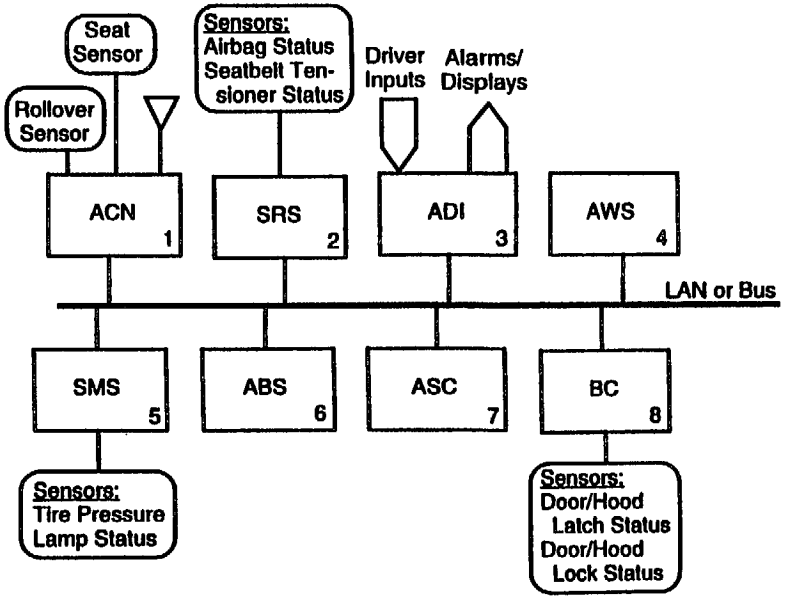

ABS = Anti-lock Braking System
ACN = Automated Collision Notification
ADI = Advanced Driver Interface
ASC = Active Suspension Controller
AWS = All Wheel Steering
BC = Body Controller
SMS = Safety Monitoring System
SRS = Supplemental Restraint System

Protocol Requirements Summary

Non-overhead bits needed:	12 min. (use multi-byte data frame)
Minimum data rate:	136 bps
Nodes to support::	8
Source nodes:	8
Message types:	9
Latency allocation:	92.1% 100 ms, 7.9% 500 ms
Ack. needed:	No

Issues

- Network loading is light; system could readily be integrated with other networks/systems
- Latencies requirements not stringent
- Failure modes less critical; system is mostly listen
- Data concurrency not critical
- Requires variable byte data field (1 to 13)
- Implementation issues: may need Off-Board Diagnostics (OBD) port

Figure 5-14: System Specification Worksheet for SA-3

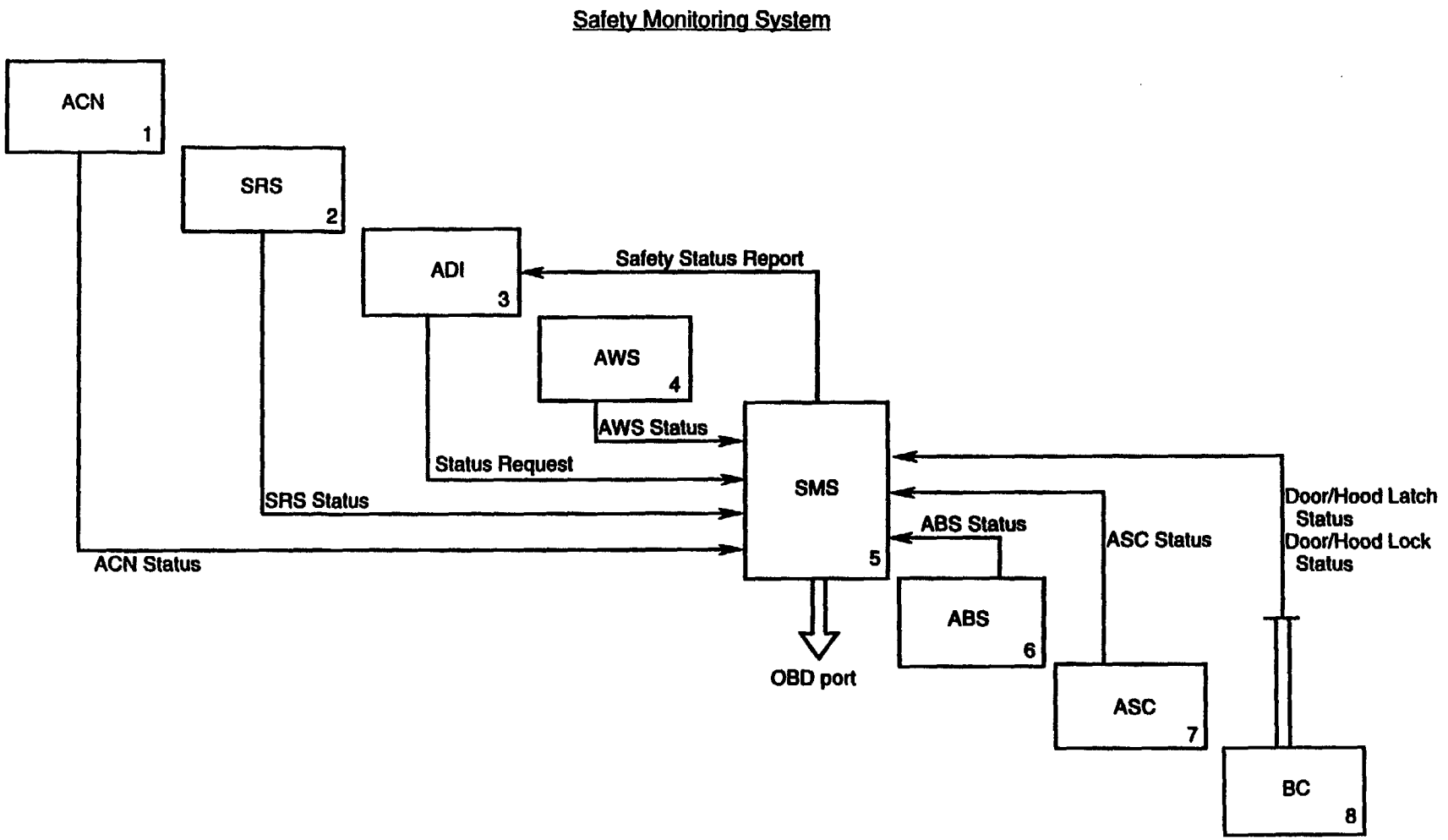

Figure 5-15: Data Flows for SA-3

Category: Situation Awareness

System: Safety Monitoring System

Information Category	Parameter	Units	Resolution	Format (1)	Bits Needed	Class (2)	Frequency(3)	Safety Priority	Latency Bound(4)	Data Rate (bps)	Data Sharing From/To
Sensor Information	SRS Status	–	32 fault codes	SE	5	A	1	M	100	5	SRS/SMS
	ABS/TCS Status	–	32 fault codes	SE	5	A	1	M	100	5	ABS/SMS
	ACN Status	–	32 fault codes	SE	5	A	1	M	100	5	ACN/SMS
	Tire Pressure	PSI	1 PSI	BCD	36	A	1	M	100	36	(local)
	Door/Hood Lock Status	–	10 locks/2 states	BM	10	A	1	M	100	10	BC/SMS
	Lamp Status	–	255 lamps/2 states	SE	8	A	0.1	M	100	0.8	(local)
	Door/Hood Latch Status	–	10 latches/2 states	BM	10	A	1	M	100	10	BC/SMS
	AWS Status	–	32 fault codes	SE	5	A	1	M	100	5	AWS/SMS
	ASC Status	–	32 fault codes	SE	5	A	1	M	100	5	ASC/SMS
Actuator Responses											
Driver Inputs	Manual Status Request	–	yes/no	SE	1	A	0.1	M	100	0.1	ADI/SMS
Driver Feedback	Status Reports	–	PSI or go/no-go	BCD, BM, SE	104	A	0.1	M	500	10.4	SMS/ADI

1. BCD=BI tary Coded Decimal; BCI = Binary Coded Integer; BM - Bit Mapped; SE = State Encoded; UAD = Unscaled Analog to DIgItal
2. Class A = Sensor sharing/body wlrtng reduction; Class B = processor Informa-tlon sharing (measured or derived); Class C = real time control
3. Messages per Second; I = Infrequent, approximate as 1 per sec.
4. End-to-end latency in msec. Latency is interpreted as the total time between sensing of a parameter and the initiation of appropriate control responses. Nehvork latency is a subset of end-to-end latency.

Figure 5-16: Information Needs Worksheet for SA-3

Category: Situation Awareness

System: Driver Alertness Monitor

Total Network Traffic	
4 ms latency	3600 bps/450 mps
10 ms latency	10 bps/4.5 mps
25 ms latency	
100 ms latency	0.1 bps/0.1 mps
500 ms latency	0.3 bps/O.3 mps
Total	3610.4 bos1454.9 mos
# Transmitting Nodes	6
# Message Types	10
Traffic Allocation (by Node)	
1	6.2 bps/0.2%
2	900 bps/24.9%
3	2.2 bps/O.1 %
4	1600 bps/44.3%
5	300 bps/8.3%
6	800 bps/22.1%

System Architecture

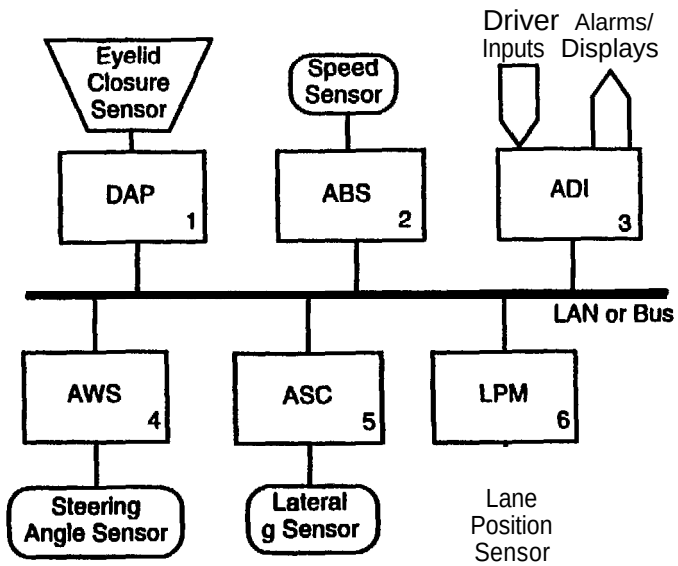

ABS = Anti-Lock Brakes
ADI = Advanced Driver Interface
ASC = Active Suspension Controller
AWS = All-Wheel Steering
DAP = Driver Alertness Processor
LPM = Lane Position Monitor

Protocol Reauirements Summary

Non-overhead bits needed:	13 (use 16 bit data/msg type frame)
Minimum data rate:	7270.4 bps
Nodes to support::	6
Source nodes:	6
Message types:	10
Latency allocation:	4 ms: 99.7%, 10 ms: 0.27%, 100 ms: <0.1% 500 ms: <0.1%
Ack. needed:	Yes

Issues

- Alertness algorithm may be significant time consumer, requiring very low latencies
- Should an alertness task be required of the driver?
- Data concurrency may be critical for alertness algorithms
- Should driver be able to activate/deactivate system?
- Most of traffic is low latency, may require low network loading

Figure 5-17 System Specification Worksheet for SA-4

Driver Alertness Monitor

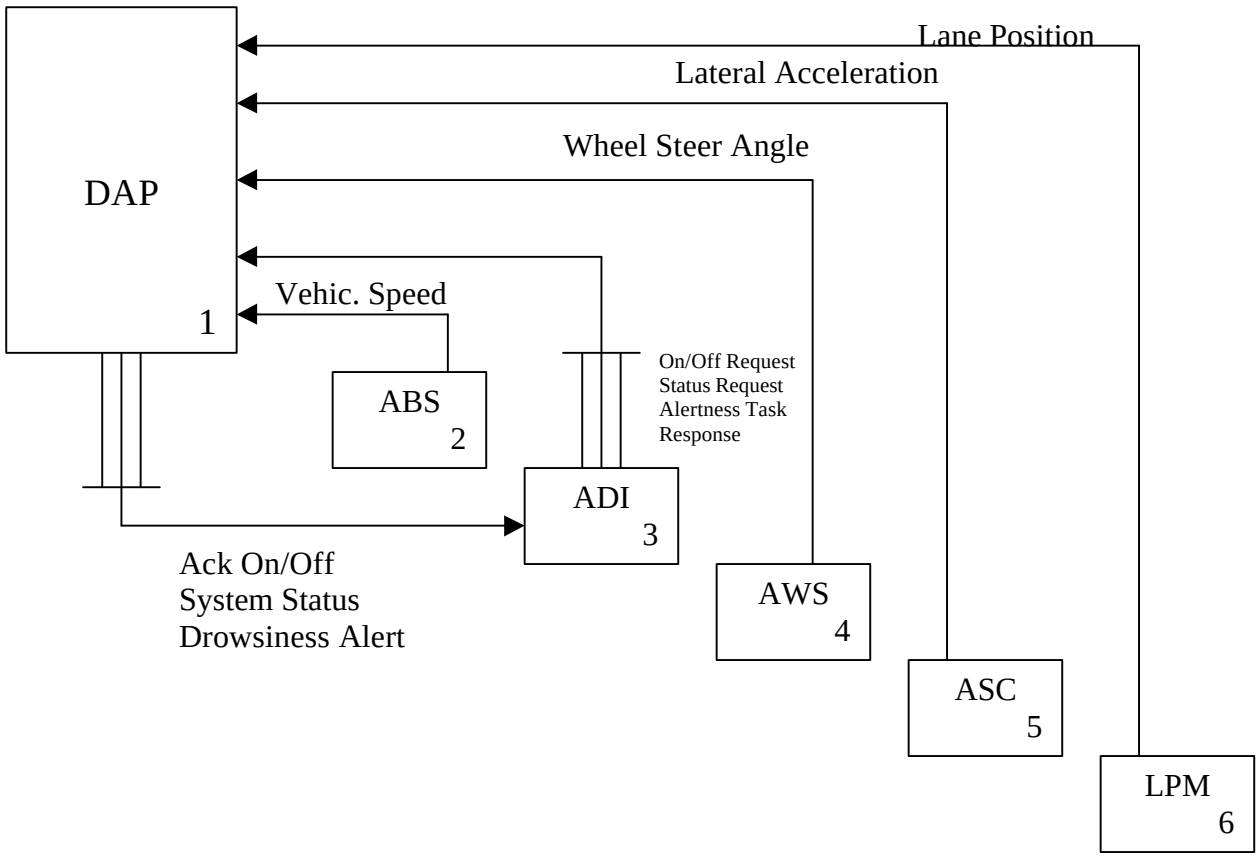

Figure 5-18: Data Flows for SA-4

Category: Situation Awareness

System: Driver Alertness Monitor

Information Category	Parameter	Units	Resolution	Format (1)	Bits Needed	Class (2)	Frequency(3)	Safety Priority	Latency Bound(4)	Data Rate (bps)	Data Sharing From/To
Sensor Information	Wheel Steer Angle	deg CW	0.5 deg	BCD	8	C	200	H	4	1600	AWS/DAP
	Vehicle Speed	m/s	0.1 m/s	BCD	9	C	100	H	4	900	ABS/DAP
	Eye Closure	–	–	–	–	–	–	–	–	–	(local)
	Lane Position	m	0.05 m	BCD	8	B	100	H	4	800	LPM/DAP
	Lateral Acceleration	g	0.05 g	BCD	6	C	50	H	4	300	ASC/DAP
Actuator Responses											
Driver Inputs	System On/Off	–	1 Of 2 states	SE	1	A	0.1	L	500	0.1	ADI/DAP
	Status Check	–	1 Of 2 states	SE	1	A	0.1	L	500	0.1	ADI/DAP
	Alertness Task Response	–	1 of 16 states	SE	4	B	0.5	H	10	2	ADI/DAP
Driver Feedback	On/Off Ack	–	on/off	SE	1	B	0.1	L	100	0.1	DAP/ADI
	System Status	–	go/no go	SE	1	B	0.1	M	500	0.1	DAP/ADI
	Drowsiness Alert	–	4 states	SE	2	B	4	H	10	8	DAP/ADI

1. BCD = Binary Coded Decimal; BCI = Binary Coded Integer; BM = Bit Mapped; SE = State Encoded; UAD = Unscaled Analog to Digital
2. Class A = Sensor sharing/body wiring reduction; Class B = processor Information sharing (measured or derived); Class C = real time control
3. Messages per Second; I = Infrequent, approximate as 1 per sec.
4. End-to-end latency in msec. Latency is interpreted as the total time between sensing of a parameter and the initiation of appropriate control responses. Network latency is a subset of end-to-end latency.

figure 5-19: Information Needs for Worksheet for SA-4

Collision Warning

1. These systems provide information similar to situation awareness systems, but operate on much shorter time scales. These systems are designed to detect potential obstacles to the car's travel, and other imminent hazards such as improper lane position. These systems are capable of making quantitative speed and distance measurements as inputs to collision prediction algorithms that warn the driver that a collision may be imminent, and that immediate driver response is required. Such systems must be capable of recognizing and responding to collision hazards within time frames that may be considerably shorter than a typical driver's natural response reflex times. The following systems are evaluated in this report:

   - CW-1. Road departure warning (Figures 5-20, 5-21, and 5-22): warns the driver that proper lane discipline is not being maintained, and that road/lane departure may be imminent. The proposed systems use either roadside optical or magnetic markers, or onboard video.

   - CW-2. Headway detection system (Figures 5-23 and 5-24): warns the driver that following distance and closing speed are such that immediate braking or swerving may be needed to avoid a collision.

   - CW-3. Intersection crash avoidance: warns the driver of immediate intersection hazards, such as another vehicle about to cross his path, impending right-of-way violation, or presence of a pedestrian. These systems are still in the conceptual stage as of the writing of this report, and a definitive list of quantifiable sensor measurements needed for algorithm inputs is not yet available. There are also numerous implementation options, including cooperative vehicle-to-vehicle systems, passive or active in-vehicle sensing, or assistance from out-of-vehicle components, such as roadside detectors and transponders. For these reasons, CW-3 was not evaluated in this study.

   - CW-4. Lane change and merging (Figures 5-25,5-26, and 5-27): wams the driver of hazards that may affect his ability to safely change lanes or merge; uses sensors to monitor areas immediately to the sides and rear of the vehicle.

Automatic Control

1. This category encompasses safety systems that can actively control the vehicle, either on command by the driver (normal operating conditions), or by overriding the driver when a collision is imminent. For collision avoidance, these systems must operate within very short time constants, requiring minimal data communication and processing delays. Systems evaluated include:

   - AC-l. Autonomous cruise control, normal vehicle operations (Figures 5-28, 5-29, and 5-30): Automatically maintains driver-selected vehicle speed, but can automatically adjust the speed to maintain proper following distances with surrounding vehicles.

Category : Collision Warning

System: Departure Warning System

Total Network Traffic	
4 ms latency	2900 bps/350 mps
10 ms latency	4 bps/4 mps
25 ms latency	
100 ms latency	
500 ms latency	.4 bps/.4 mps
Total	2904.4 bps/354.4 mps
# Transmitting Nodes	5
# Message Types	8
Traffic Allocation (by Node)	
1	4.2 bps/0.1 %
2	900 bps/31 %
3	0.2 bps/-
4	1600 bps/55.1%
5	400 bps/13.8%

System Architecture

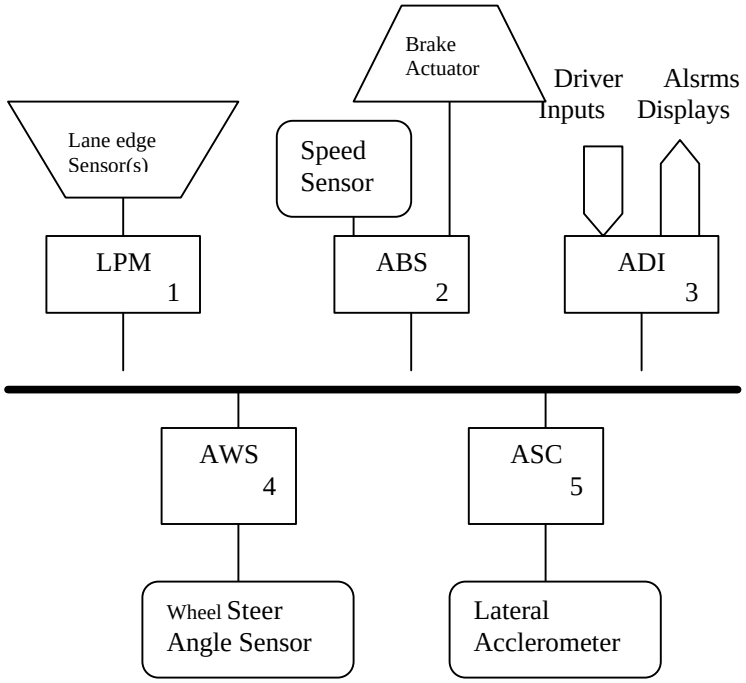

Abbreviations:
ABS = Anto-Lock Brakes
ADI = Advanced Driver Interface
ASC = Active Suspension Control
AWS = An-Wheel Steering
LPM = Lane Position Monitor

Protocol Requirement Summary

Non-overhead bits needed: 12 (use 16 bit datalmsg type (Field))
Minimum data rate: 5670.4 bps
Nodes to support: 5
Source nodes: 5
Message types: 8
Latency allocation: 4 ms: 99.85%: 10ms: 0.14%
500 ms: negl.
Ack. Needed: Yes

Issues

- Network traffic load is modest
- Need low latencies with high probability, narrow vaiance, requires low network loading
- Failure modes may be complex; must be benign to ABS, AWS, ASC
- Data concurrency not critical
- May be integrated with roadside beacon system with little impact on network
- Implementation issues: where to put driver displays/ controls; where to get vehicle Speed info. (ABS, ETC, Instrument Panel?)

Figure 5-20: System Specification Worksheet for CW-1

Road Departure Warning System

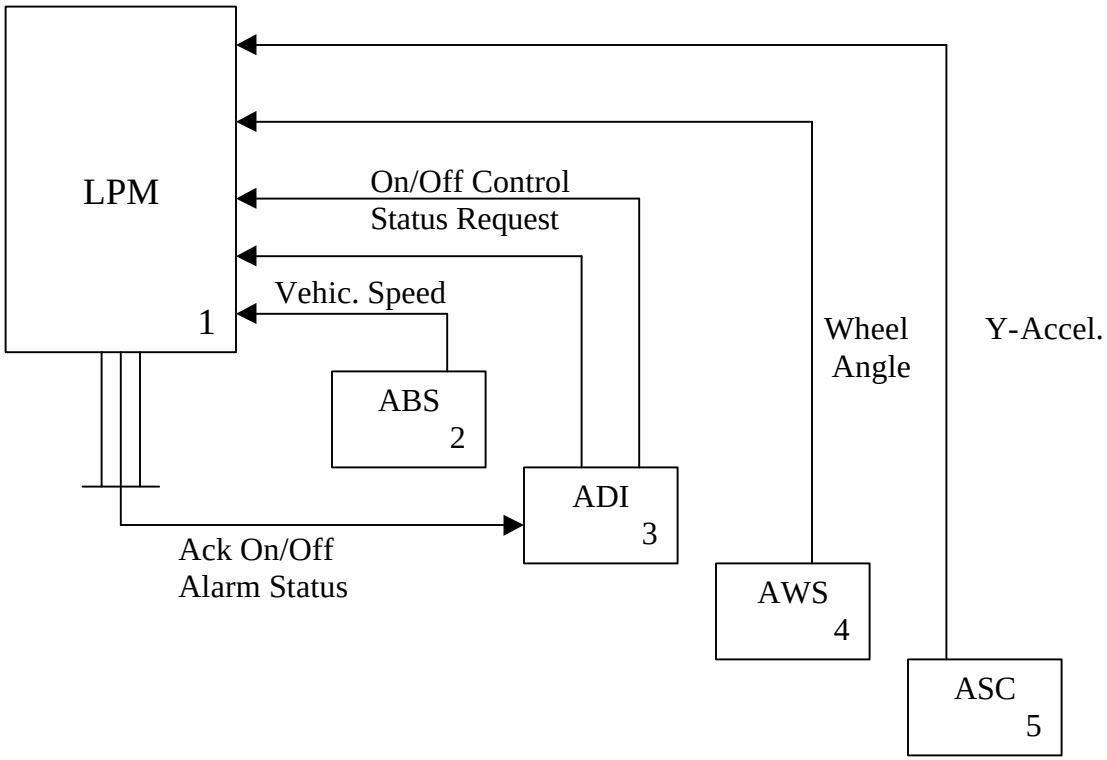

Figure 5-21: Data Flows for CW-4

Category: Collision Warning

System: Road Departure Warning System

Information Category	Parameter	Units	Resolution	Format (1)	Bits Needed	Class (2)	Frequency(3)	Safety Priority	Latency Bound(4)	Data Rate (bps)	Data Sharing From/To
Sensor Information	Lane Edge Proximity	cm	1 cm	BCD	8	C	100	H	4	800	(local)
	Vehicle Speed	m/s	0.1 m/s	BCD	9	C	100	H	4	900	ABS/LPM
	Wheel Steer Angle	deg CW	0.5 deg	BCD	8	C	200	H	4	1600	AWS/LPM
	Lateral Acceleration	g's	0.05 g	BCD	8	C	50	H	4	400	ASC/LPM
Actuator Responses											
Driver Inputs	On/Off	–	1 of 2 states	SE	1	A	0.1	L	500	0.1	ADI/LPM
	Status Request	–	1 of 2 states	SE		A	0.1	L	500	0.1	ADI/LPM
Driver Feedback	Driver Alert Alarm	–	1 of 2 states	SE	1	C	4	H	10	4	LPM/ADI
	System Status	–	1 of 2 states	SE	1	A	0.1	L	500	0.1	LPM/ADI
	On/Off Ack	–	1 of 2 states	SE	1	A	0.1	L	500	0.1	LPM/ADI

1. BCD = Binary Coded Decimal; BCI = Binary Coded Integer; BM = Bit Mapped; SE = State Encoded; UAD = Unscaled Analog to Digital
2. Class A = Sensor sharing/body wiring reduction; Class B = processor information sharing (measured or derived); Class C = real time control
3. Messages per Second; I = Infrequent, approximate as 1 per sec.
4. End-to-end latency in msec. Latency is interpreted as the total time between sensing of a parameter and the initiation of appropriate control responses. Network latency is a subset of end-to-end latency.

Figure 5-22: Information Needs Worksheet for CW-1

Category: Collision Warning

System: Headway Warning System

Total Network Traffic	
4 ms latency	904 bps/104 mps
10 ms latency	38 bps/8 mps
25 ms latency	--
100 ms latency	0.1 bps/0.1 mps
500 ms latency	0.1 bps/0.1 mps
Total	942.2 bps/112.2 mps
# Transmitting Nodes	3
# Message Types	6
Traffic Allocation (by Node)	
1	42.1 bps/4.5%
2	900 bps/95.5%
3	0.3 bps/<0.1%

System Architecture

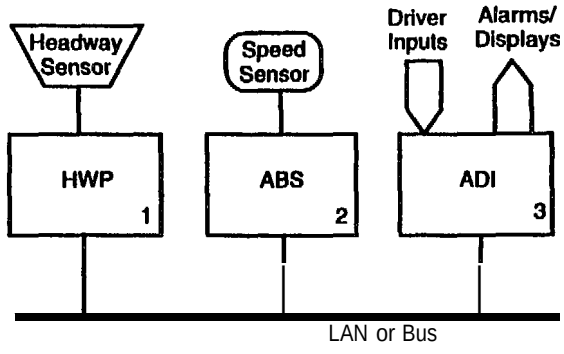

HWP = Headway Processor
ABS = Anti-Lock Brakes
ADI = Advanced Driver Interface.

Data Flows

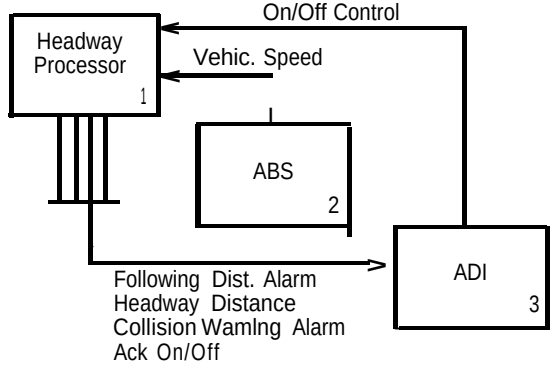

Protocol Requirements Summary

Non-overhead bits needed:	14 (use 16 bit data/msg type frames)
Minimum data rate:	1795.2 bps
Nodes to support::	3
Source nodes:	3
Message types:	6
Latency allocation:	4 ms: 95.9%, 10ms: 4%, >10ms: –
Ack. needed:	No

Issues

- Network traffic load is modest
- Majority of traffic is low latency; requires low network loading
- Latency bounds must be met with high probability, little variance
- Failure modes must be benign to ABS
- Data concurrency not critical
- No Ack needed

Figure 5-23: System Specification Worksheet and Data Flows for CW-2

Category: Collision Warning

System: Headway Warning System

Information Category	Parameter	Units	Resolution	Format (1)	Bits Needed	Class (2)	Frequency(3)	Safety Priority	Latency Bound(4)	Data Rate (bps)	Data Sharing From/To
Sensor Information	Headway Distance	m	o.1 m	BCD	11	C	300	M	4	3300	(local)
	Vehicle Speed	m/s	0.1 m/s	BCD	9	C	100	M	4	900	ABS/HWP
Actuator Responses											
Driver Inputs	On/Off	–	1 0f 2 states	SE	1	A	0.1	L	500	0.1	ADI/HWP
	Display Distance	–	1 0f 2 states	SE	1	A	0.1	L	500	0.1	(local)
	Display Alarms	–	1 0f 2 states	SE	1	A	0.1	L	500	0.1	(local)
Driver Feedback	Headway Distance	ft	1 ft	BCD	9	B	4	M	10	36	HWP/ADI
	Following Dist. Alarm	–	on/off	SE	1	B	4	M	10	2	HWP/ADI
	Collision Warning Alarm	–	on/off	SE	1	C	4	H	4	4	HWP/ADI
	Ack On/Off	–	yes/no	SE	1	A	0.1	L	100	0.1	HWP/ADI

1. BCD = Binary Coded Decimal; BCI = Binary Coded Integer; BM = Bit Mapped; SE = State Encoded; UAD = Unscaled Analog to Digital
2. Class A = Sensor sharing/body wiring reduction; Class B = processor information sharing (measured or derived): Class C = real time control
3. Messages per Second; I = Infrequent, approminate as 1 per sec.
4. End-to-end latency In msec. Latency is Interpreted as the total time between sensing of a parameter and the initiation of appropriate control responses. Network latency is a subset of end-to-end latency.

Figure 5-24: Information Needs Worksheet for CW-2

Category: Collision Warning

System: Lane Change and Merge Warning System

Total Network Traffic	
4 ms latency	2500 bps/300 mps
10 ms latency	32 bps/4 mps
25 ms latency	
100 ms latency	0.1 bps/0.1 mps
500 rns latency	0.3 bps/0.3 mps
Total	2532.4 bps/304.4 mps
# Transmitting Nodes	4
# Message Types	7
Traffic Allocation (by Node)	
1	32.2 bps/1.3%
2	900 bps/35.5%
3	0.2 bps/-
4	1600 bps/63.2%

System Architecture

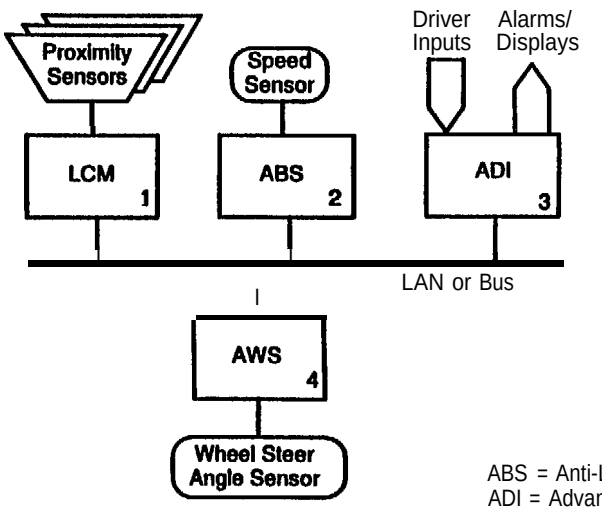

ABS = Anti-Lock Brakes
ADI = Advanced Driver Interface
AWS = All-Wheel Steering
ETC = Electronic Transaxle Controller
LCM = Lane Change & Merge Processor

Protocol Requirements Summary

Non-ovehead bits needed:	13 (Use 16 bit dat/msg type frame)
Minimum data rate:	4070.4 bps
Nodes to support::	4
Source nodes:	4
Message types:	7
Latency allocation:	4 ms: 96.7%, 10 ms: 1.3%. 100 ms: <0. 1 %, 500 ms: <0. 1%
Ack. needed:	Yes

Issues

- Network traffic load is modest
- Latency bounds must be met with high probability, little variance
- htajority of traffic is low latency; requires low network loading
- Failure modes must be benign to ABS and AWS
- Implementation issues: Integrate with turn signals (tells system direction of merge)
- Data concurrency not critical

Figure 5-25: SystemSpecification Worksheet for CW-4

Lane Chanae and Merge Warning System

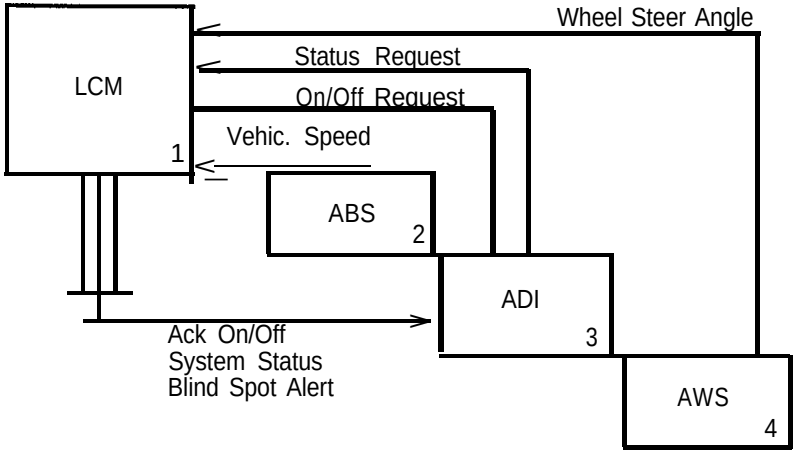

Figure 5-26: Data Flows for CW-4

Category: Driver Warning

System: Lane Change and Merge Warning System

Information Category	Parameter	Units	Resolution	Format (1)	Bits Needed	Class (2)	Frequency(3)	Safety Priority	Latency Bound(4)	Data Rate (bps)	Data Sharing From/To
Sensor Information	Wheel Steer Angle	deg CW	0.5 deg	BCD	8	B	200	H	4	1600	AWS/LCM
	Vehicle Speed	m/s	0.1 m/s	BCD	9	B	100	H	4	900	ABS/LCM
	Obstacle Location	–	8 slots	BM	8	B	100	M	4	800	(local)
	Obstacle Distance	m	0.05 m	BCD	8	B	100	M	4	800	(local)
Actuator Responses											
Driver Inputs	System On/Off		1 of 2 states	SE	1	A	0.1	L	500	0.1	ADI/LCM
	Status Check		1 Of 2 states	SE	1	A	0.1	L	500	0.1	ADI/LCM
Driver Feedback	On/Off Ack		on/off	SE	1	B	0.1	L	100	0.1	LCM/ADI
	System Status		go/no go	SE	1	B	0.1	M	500	0.1	LCM/ADI
	Blind Spot Alert		8 slots	BM	8	B	4	M	10	32	LCM/ADI

1. BCD = Binary Coded Decimal; BCI = Binary Coded Integer; BM = Bit Mapped; SE = State Encoded; UAD = Unscaled Analog to Digital
2. Class A = Sensor sharingbody wiring reduction; Class B = processor information sharing (measured or derived); Class C = real time control
3. Messages per Second; 1 = Infrequent approximate as 1per sec.
4. End-to-end latency in msec. Latency is interpreted as the lotal time between sensing of a parameter and the Initiation of appropriate control responses. Network latency is a subset of end-to-end latency.

Figure 5-27: Information Needs Worksheet for CW-4

Category: Automatic Control

System: Autonomous Cruise Control

Total Network Traffic	
4 ms latency	5900 bps mps
10 ms latency	24 bps/16 mps
25 ms latency	**–**
100 ms latency	**26.3 bps/5.3 mps**
500 ms latency	**–**
Total	**5950.3 bps/741.3 mps**
# Transmitting Nodes	5
# Message Types	18
Traffic Allocation (by Node)	
1	632.2 bps/10.6%
2	900 bps/15.1%
3	18.1 bps/0.3%
4	3300 bps/55.5%
5	1100 bps/18.5%
6	

System Block Diagram

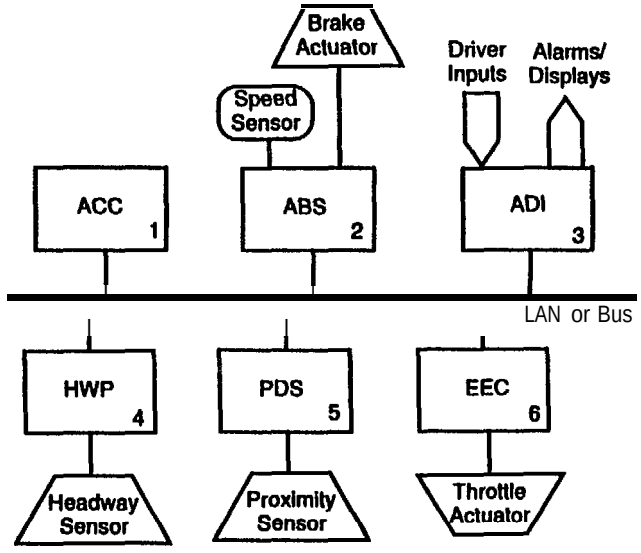

ABS = Anti-Lock Brakes
ACC = Autonomous Cruise Control
ADI = Advanced Driver Interface
EEC = Electronic Engine Control
HWP = Headway Processor
PDS = Proximity Detection System

Protocol Requirements Summary

Non-overhead blts needed:	14 (use 15-bit data field)
Minimum data rate:	11,861 bps
Nodes to support::	6
Source nodes:	5
Message types:	17
Latency allocation:	4 ms: 99.15%, 10 ms: 0.4%, 100 ms: 0.44%
Ack. needed:	Yes

Issues

- Majority of traffic requires low latency; may require low network loading
- Failure modes are critical; may require ISO compliance
- Data concurrency not critical
- Errored or out-of-bound data must be detected with high probability

Figure 5-28: System Specification Worksheef for AC-1

Autonomous Cruise Control

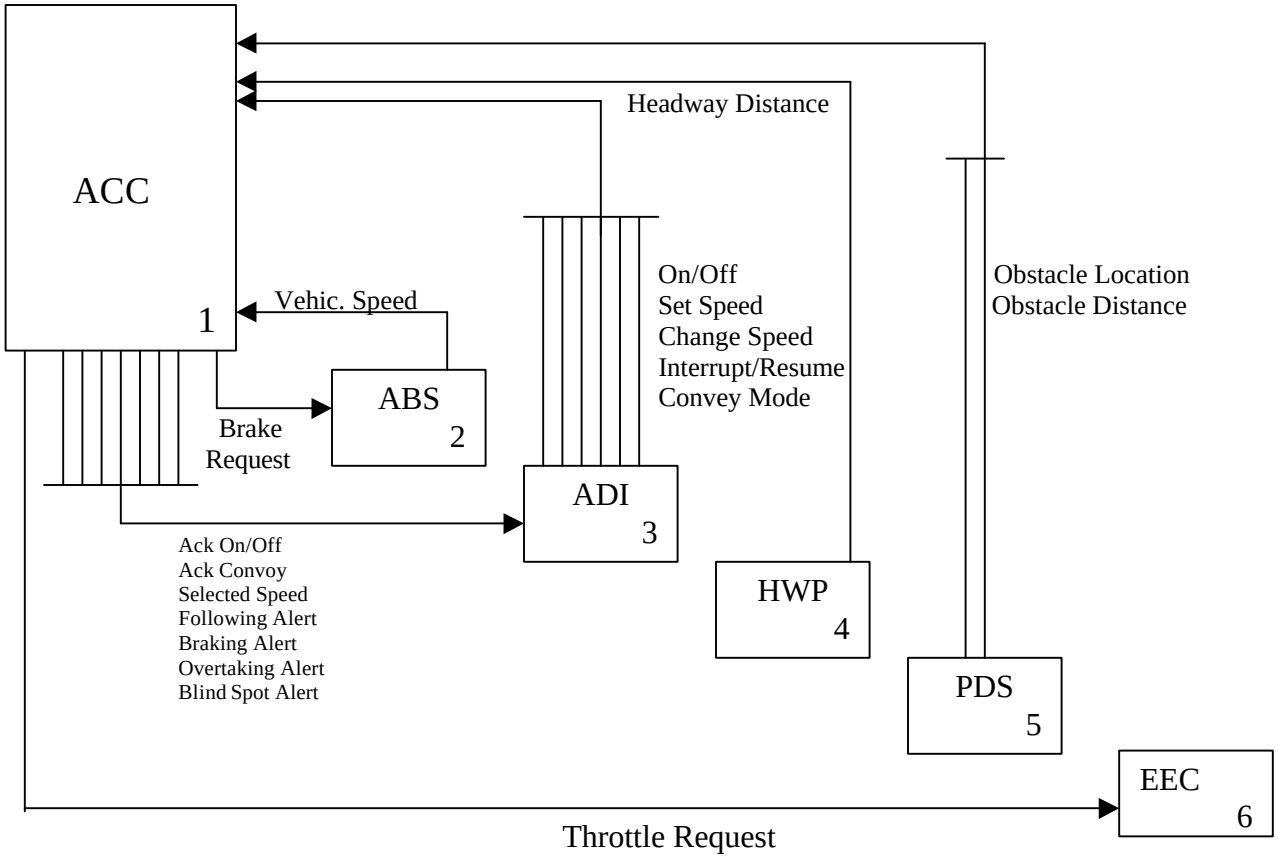

Figure 5-21: Data Flows for CW-4

Category: Automatic Control

System: Autonomous Cruise Control

Information Category	Parameter	Units	Resolution	Format (1)	Bits Needed	Class (2)	Frequency(3)	Safety Priority	Latency Bound(4)	Data Rate (bps)	Data Sharing From/To
Sensor Information	Headway Distance	m	o.1 m	BCD	11	C	300	H	4	3300	HDS/ACC
	Vehicle Speed	m/s	0.1 m/s	BCD	9	C	100	H	4	900	ABS/ACC
	Obstacle Location	–	1 of 6 states	SE	3	C	100	H	4	300	PDS/ACC
	Obsta[illegible]e [illegible]stance	m	0. m	BCD	8	C	100	H	4	800	PDS/ACC
Actuator Responses	Braking Request	–	32 levels	UAD	5	C	100	H	4	500	ACC/ABS
	Throttle Request	–	32 levels	UAD	5	C	20	H	4	100	ACC/EEC
Driver Inputs	System On/Off	–	1 0f 2 states	SE	1	A	0.1	L	100	0.1	ADI/ACC
	Set Speed	MPH	1 MPH	BCD	8	A	1	L	100	8	ADI/ACC
	Change Speed	MPH	1 MPH	BCD	8	B	1	M	100	8	ADI/ACC
	Interrupt/Resume Speed	–	1 0f 2 states	SE	1	B	1	M	100	1	ADI/ACC
	Set Convoy Mode	–	1 0f 2 states	SE	1	A	1	L	100	1	ADI/ACC
Driver Feedback	On/Off Ack	–	on/off	SE	1	A	0.1	L	100	0.1	ACC/ADI
	Convoy Mode Ack	–	on/off	SE	1	A	0.1	L	100	0.1	ACC/ADI
	Selected Speed	MPH	1 MPH	BDC	8	A	1	L	100	8	ACC/ADI
	Following Distance Alert	–	on/off	SE	1	C	4	H	10	4	ACC/ADI
	Braking Alert	–	on/off	SE	1	C	4	H	10	4	ACC/ADI
	Overtaking Vehicle Alert	–	on/off	SE	1	C	4	H	10	4	ACC/ADI
	Blind Spot Alert	–	on/off	SE	3	C	4	H	10	12	ACC/ADI

1. BCD = Binary Coded Decimal; BCI = Binary Coded Integer; BM = Bit Mapped; SE = State Encoded; UAD = Unscaled Analog to Digital
2. Class A = Sensor sharing/body wiring reduction; Class B = processor information sharing (measured or derived); Class C = real time control
3. Messages per Second; I = Infrequent, approximate as 1 per sec.
4. End-to-end latency in msec. Latency is interpreted as the total time between sensing of a parameter and the initiation of appropriate control responses. Network latency is a subset of end-to-end latency.

Figure 5-30: Information Needs Worksheet for AC-1

Category: Automatic Control

System: Collision Avoidance System

Total Network Traffic	
4 ms latency	13400 bps/1620 mps
10 ms latency	4 bps/4 mps
25 ms latency	
100 ms latency	
500 ms latency	0.4 bps/0.4 mps
Total	13404.4 bps/1624.4 mps
# Transmitting Nodes	7
# Message Types	16
Traffic Allocation (by Node)	
1	2204.2 bps/16.4%
2	900 bps/6.7%
3	0.2 bps/–
4	1700 bps/12.7%
5	1600 bps/11.9%
6	800 bps/6%
7	
8	5400/ bps/40.3%

System Architecture

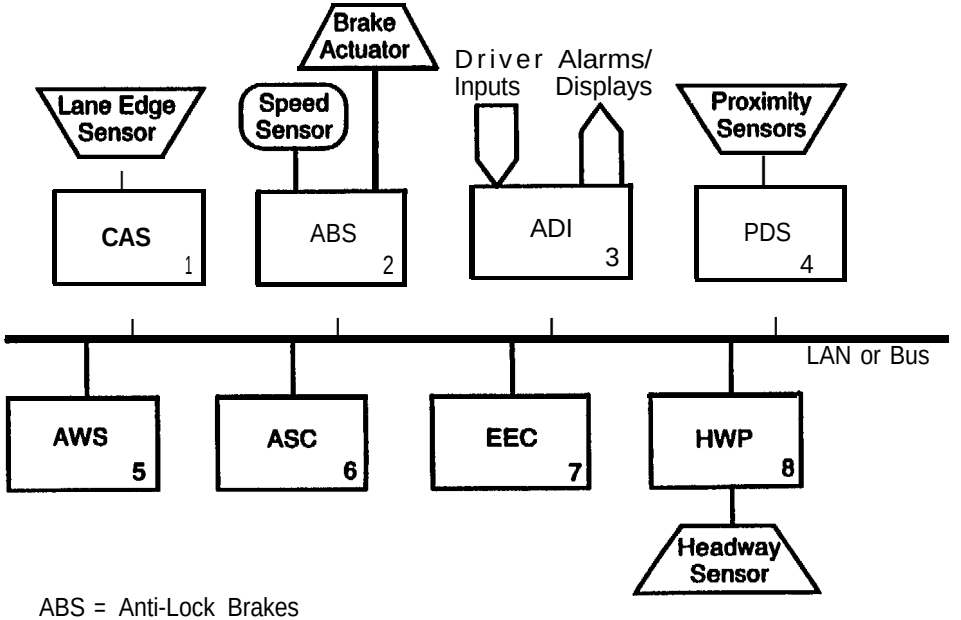

ABS = Anti-Lock Brakes
ADI = Advanced Driver Interface
ASC = Active Suspension Control
AWS = All-Wheel Steering
CAS = Collision Avoidance System
EEC = Electronic Engine Controller
HWP = Headway Processor
PDS = Proximity Detection System

Protocol Requirements Summary

Non-overhead bits needed:	14 (use 16 bit data/msg type frame)
Minimum data rate:	25990 bps
Nodes to support::	8
Source nodes:	7
Message types:	16
Latency allocation:	4 ms: 99.96%, others: <0.1%
Ack. needed:	Yes

Issues

- Latency requirements are stringent, requires low network loading
- Failure modes are critical and must be thoroughly analyzed
- Should driver have warning only mode option, or On/Off capability?

Figure 5-31: System Specification Worksheet for AC-2

Collision Avoidance System

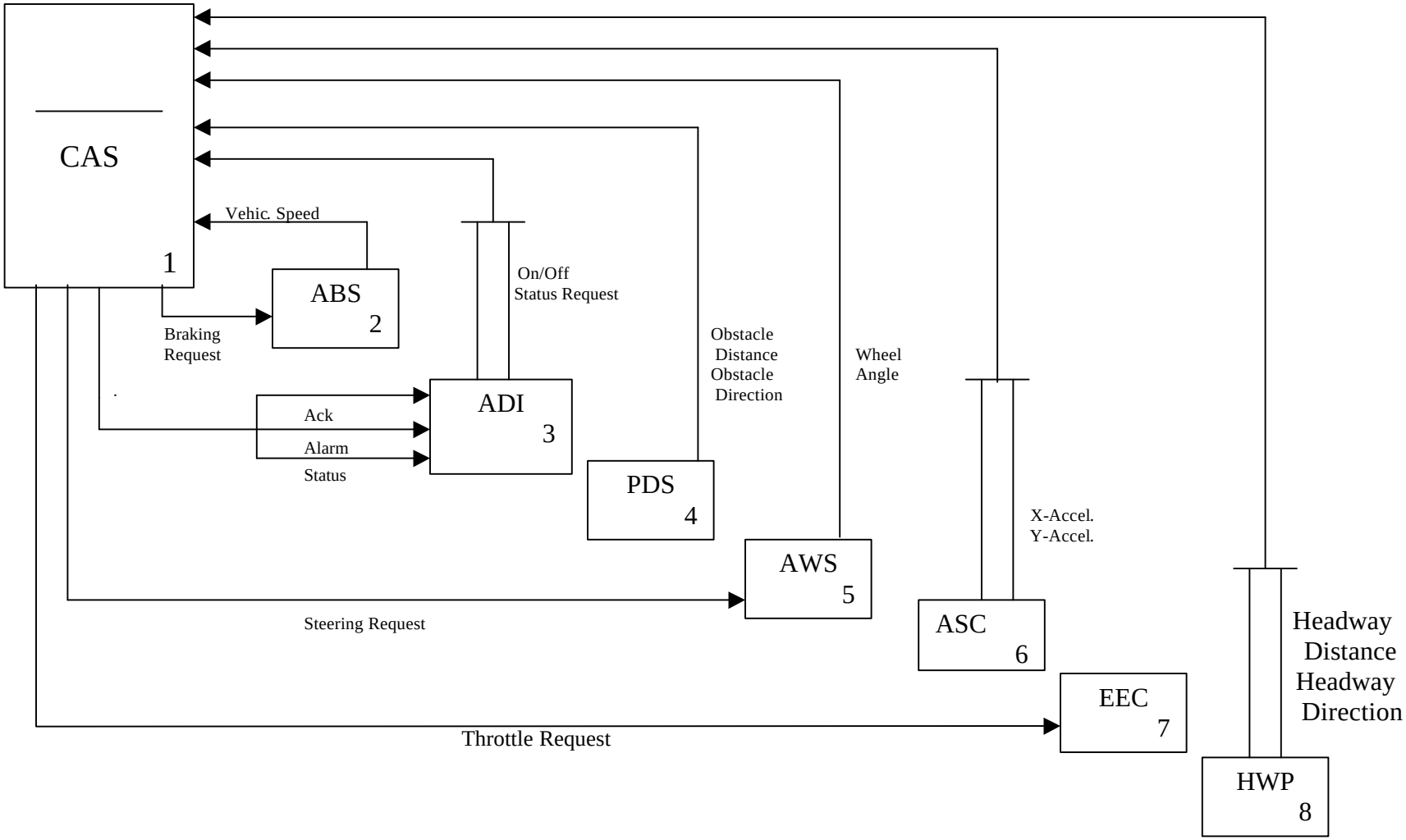

Figure 5-32: Data Flows for AC-2

Category: Automatic Control

System: Collision Avoidance System

Information Category	Parameter	Units	Resolution	Format (1)	Bits Needed	Class (2)	Frequency(3)	Safety Priority	Latency Bound(4)	Data Rate (bps)	Data Sharing From/To
Sensor Information	Lane Edge Proximity	cm	1 cm	BCD	8	C	100	H	4	800	(local)
	Vehicle Speed	m/s	0.1 m/s	BCD	9	C	100	H	4	900	ABS/CAS
	Wheel Steer Angle	deg CW	0.5 deg	BCD	8	C	200	H	4	1600	AWS/CAS
	Lateral Acceleration	g's	0.05 g	BCD	8	C	50	H	4	400	ASC/CAS
	Longintudinal Accel	g's	0.05 g	BCD	8	C	50	H	4	400	ASC/CAS
	Headway Distance	m	0.1 m	BCD	11	C	300	H	4	3300	HDS/CAS
	Headway Direction	deg	2 deg	BCD	7	C	300	H	4	2100	HDS/CAS
	Obstacle Distance	m	0.1 m	BCD	10	C	100	H	4	1000	PDS/CAS
	Obstacle Direction	deg	2 deg	BCD	7	C	100	H	4	700	PDS/CAS
Actuator Responses	Steering Request	deg CW	0.5 deg	BCD	8	C	200	H	4	1600	CAS/AWS
	Braking Request	–	1 bit	UAD	5	C	100	H	4	500	CAS/ABS
	Throttle Request	–	1 bit	UAD	5	C	20	H	4	100	CAS/EEC
Driver Inputs	On/Off	–	1 Of 2 states	SE	1	A	0.1	L	500	0.1	ADI/LPM
	Status Request	–	1 Of 2 states	SE		A	0.1	L	500	0.1	ADI/LPM
Driver Feedback	Driver Alert Alarm	–	1 Of 2 states	SE	1	C	4	H	10	4	CAS/ADI
	System Status	–	1 Of 2 states	SE	1	A	0.1	L	500	0.1	CAS/ADI
	On/Off Ack	–	1 Of 2 states	SE	1	A	0.1	L	500	0.1	CAS/ADI

1. BCD = Binary Coded Decimal; BCI = Binary Coded Integer; BM = Bit Mapped; SE = State Encoded; UAD = Unscaled Analog to Digital
2. Class A = Sensor sharing/body wiring reduction; Class B = processor information sharing (measured or derived); Class C = real time control
3. Messages per Second; I = Infrequent, approximate as 1 per sec.
4. End-to-end latency in msec. Latency is interpreted as the total time between sensing of a parameter and the initiation of appropriate control responses. Network latency is a subset of end-to-end latency.

Figure 5-33: Information Needs Worksheet for AC-2

Collision Response

1. Collision response systems provide a last resort safety enhancement capability when a collision is unavoidable. They may implement both pre- and post-crash preparation activities to reduce the severity of the consequences of a collision Systems include:

   - CR-l. Pre-collision preparation: Implements functions such as seat belt tensioning and airbag deployment in anticipation of a high g-force collision; requires highly reliable, very low latency response times. It is envisioned that the airbag deployment and seatbelt tensioning functions will remain directly connected to the Supplemental Restraint System (SRS) control module. Making this connection through a network would only introduce delays and possibility of errored messages, with no significant benefits. CR-l is therefore not considered a suitable candidate for networking, other than status reporting. It is shown as a "black box" in some of the other system block diagrams where airbag status and high-g impact sensing information is needed by other IVHS systems.

   - CR-2. Automated collision notification (Figures 5-34, 5-35, and 5-36): in response to a high g-force collision, or under driver command, sends an emergency message to the nearest 911 type of facility. The message may contain key information such as the number of vehicle occupants, the peak g forces encountered, whether a rollover occurred, the geographic coordinates and time of collision, and other important information. The system must be very rugged and reliable.

Data Collection

1. The increasing use of networking concepts in automobiles can permit the collection of significant volumes of *in situ* vehicle performance data for research applications. An important potential benefit is the ability to quickly gather and assess objective, accurate, quantifiable collision data for use in later safety research and regulation formulation.

   - DC-l. Automated data collection system (Figures 5-37, 5-38, and 5-39): continually stores and updates key vehicle performance parameters that may be useful for post-collision safety research. System must be very rugged to survive high g-force impacts.

Category: Collision Response

System: Automated Collision Notification System

Total Network Traffic

4 ms latency	–
10 ms latency	–
25 ms latency	–
100 ms latency	4843 bps/202.5 mps
500 ms latency	0.3 bps/0.3 mps
Total	4843.3 bps/202.8 mps
# Transmitting Nodes	5
# Message Types	9
Traffic Allocation (by Node)	
1	8.5 bps/0.2%
2	33.6 bps/0.7%
3	0.2 bps/–
4	4801 bps/99.1%

System Architecture

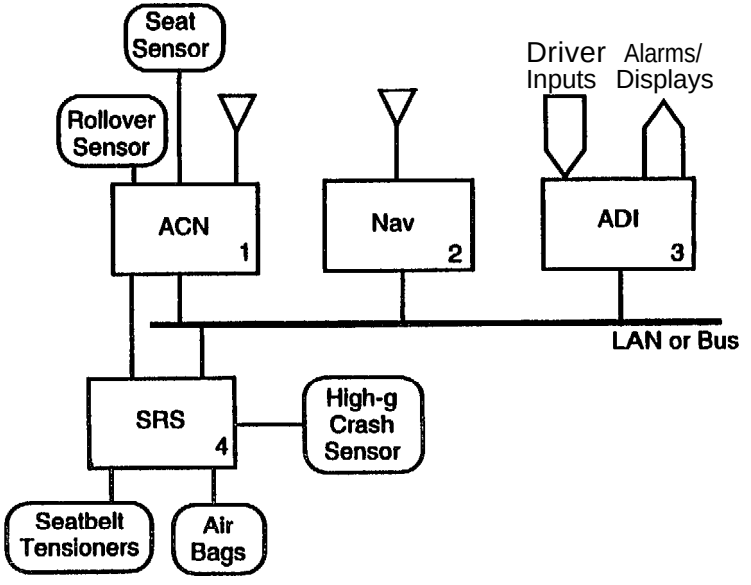

ACN = Automayed Collision Notification
ADI = Advanced Driver Interface
ASC = Active Suspension Controller

Nav = Navigation System
SRS = Supplemental Restraint System

Protocol Requirements Summary

Non-overhead bits needed:	12 to 52 (use variable byte format)
Minimum data rate:	4853 bps
Nodes to support::	5
Source nodes:	4
Message types:	8 (3 bits)
Latency allocation:	100 ms: 99.9%, 500 ms: <0.1%
Ack. needed:	Yes

Issues

- Latency and concurrency not critical for most data; data changes slowly
- Failure modes must be benign to other vehicle control systems; device is "listen only" to the network
- Reliability and crash survivability must be very high
- "Trigger" from air bag deployment should be direct (not over network) due to latency and error concerns
- Are other triggers needed other than airbag deployment, e.g., lateral g's, driver manual trigger?

Figure 5-34: System Specification Worksheet for CR-2

Automated Collision Notification System

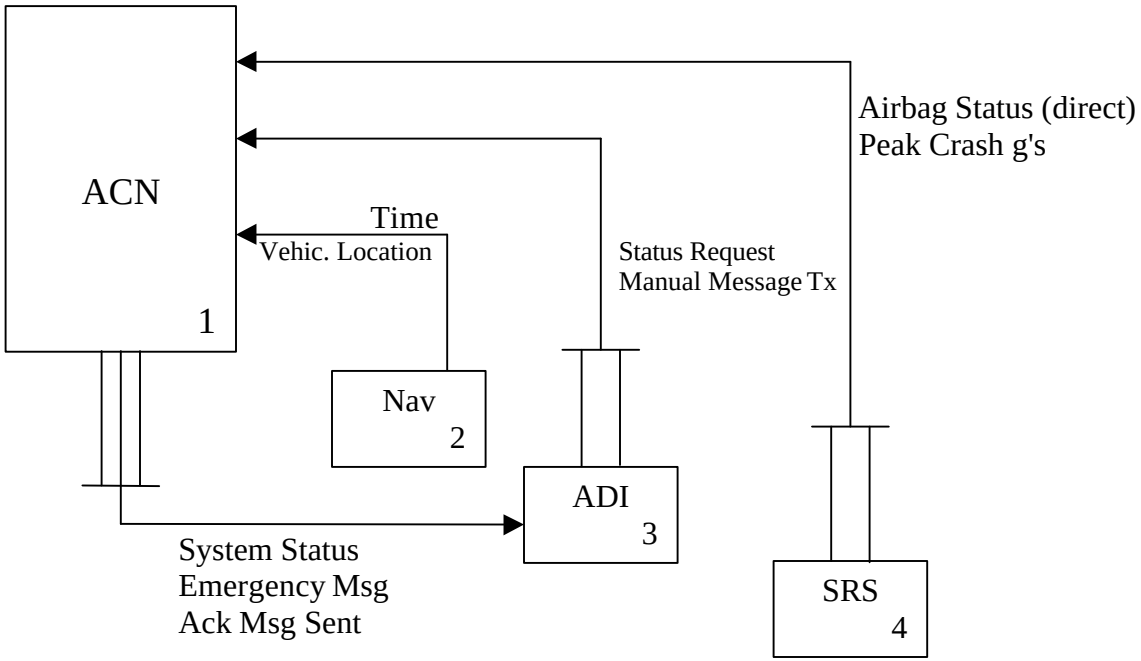

Figure 5-35: Data Flows for CR-2

Category: Collision Response

System Automated Collision Notification System

nformation Category	Parameter	Units	Resolution	Format (1)	Bits Needed	Class (2)	Frequency(3)	Safety Priority	Latency Bound(4)	Data Rate (bps)	Data Sharing From/To
Sensor nformation	Vehicle Location	Lat/Lon	3 sec	BM+BCI	6 bytes	B	0.2	H	100	9.6	Nav/ACN
	# Seats Occupied	–	1 0f 8	SE	3	B	02	M	100	0.6	(local)
	Rollover	–	yes/no	SE	1	B	1	M	100	1	(local)
	Peak g's	g's	0.05 g	BCD	3 bytes	B	200	H	100	4800	SRS/ACN
	Airbag Indicator	–	yes/no	SE	1	B	1	M	100	1	SRS/ACN
	Time	H:M:S	1 sec	BM+BCI	3 bytes	B	1	H	100	24	Nav/ACN
Actuator Responses	Send Emergency Message	–									(local)
Driver nputs	Status Check	–	1 0f 2 states	SE	1	A	0.1	M	500	0.1	ADI/ACN
	Send Message Manually	–	1 0f 2 states	SE	1	C	0.1	H	500	0.1	ADI/ACN
Driver Feedback	System Status	–	on/off	SE	1	B	0.1	M	500	0.1	ACN/ADI
	Emergency Message	–	–	all	84	B	0.1	M	100	8.4	ACN/ADI

1. BCD = Binary Coded Decimal; BCI = Binary Coded Integer; BM = BH Mapped, SE = Slate Encoded; UAD = Unscaled Analog to Digital
2. Class A = Sensor sharing/body writing reduction; Class B = processor Informat tion sharing (measured or derived); Class C = real lime control
3. Messages per Second; I =Infrequent, approximate as 1 per sec.
4. End-lo-end latency In msec. Latency is interpreted as the total lime between sensing of a parameter and the initiation of approprtale control responses. Network latency Is a subset of end-to-end latency.

Figure 5-36: Informatlon Needs Worksheet for CR-2

Category: Post-Collision Analysis

System: Collision Data Recorder

Total Network Traffic	
4 ms latency	
10 ms latency	
25 ms latency	7671.2 bps1767.5 mps
100 ms latency	
500 ms latency	0.1 bps/0.1 mps
Total	7671.3 bpsf767.6 mps
# Transmitting Nodes	11
# Message Types	19
Traffic Allocation (by Node)	
1	2.6 bps/<0. 1%
3	33.6 bps/0.4%
3	
4	1600 bps/20.9%
5	0.1 bps/<O. 1%
6	1600 bps/20.9%
7	17.6 bps/0.2%
8	2400 bps/31.2%
9	83.4 bps/1 %
10	10 bps/0.1%
11	24 bps/0.3%
12	1900/24.8%

System Architecture

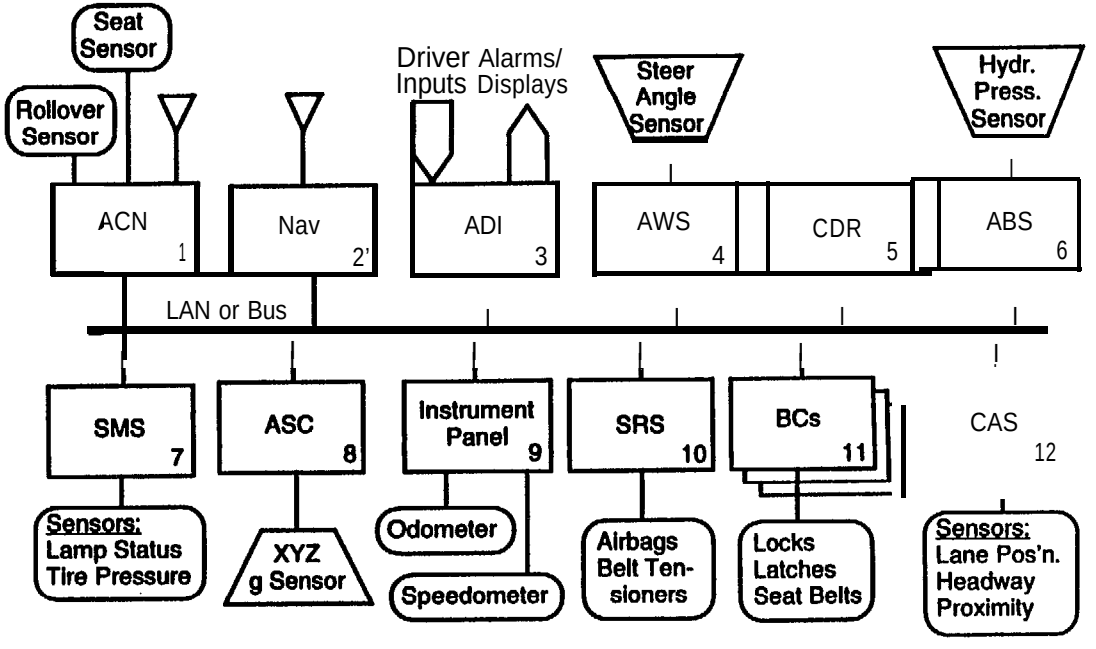

ABS = Anti-lock Braking System
ACN = Automated Collision Notification
ADI = Advanced Driver Interface
ASC = Active Suspenslon Controller
AWS = All Wheel Steering
BC = Body Controller

CAS = Collision Avoidance System
CDR = Collision Data Recorder
Nav = Navigation System
SMS = Safety Monitoring System
SRS = Supplemental Restraint System

Protocol Reauirements Summary

Non-overhead bits needed: 15 (use multi-byte data frame)
Minimum data rate: 13918 bps
Nodes to support:: 12
Source nodes: 11
Message types: 19
Latency allocation: 100% 25 ms
Ack. needed: No

Issues

- Latency needs are driven by need to capture last fractional seconds of a collision; otherwise not critical
- Failure modes less critical; CDR is "listen only"
- Data concurrency may be critical for post-collision data analysis
- Errored or out-of-bound data must be detected with high probability
- Errored or lost data can be discarded without retransmit or Ack (wait for next sample)

Figure 5-37: System Specification Worksheet for DC-1

R95019.5

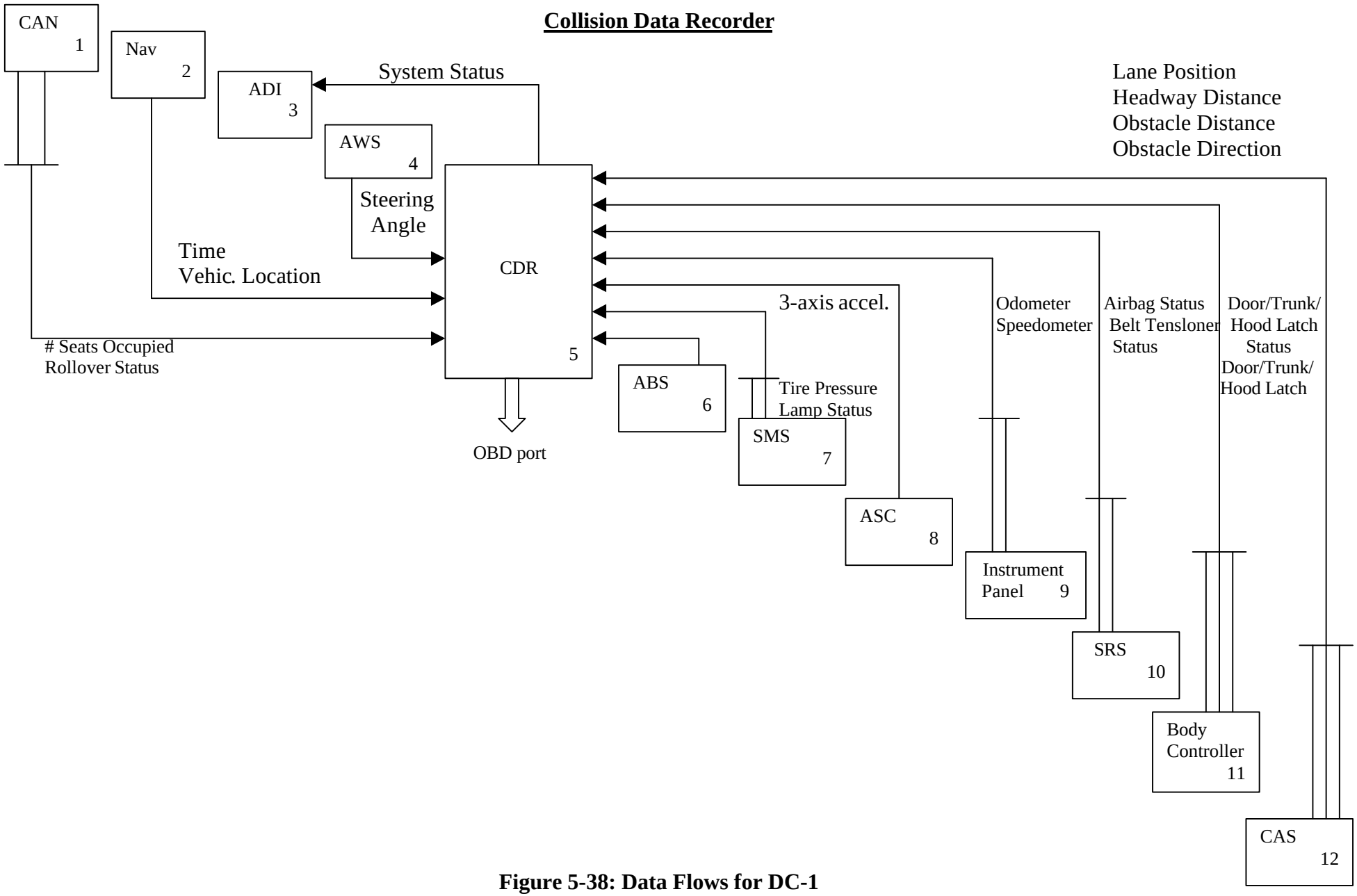

Figure 5-38: Data Flows for DC-1

Category: Post-Collision Data Analysis

System: Collision Data Recorder

Information Category	Parameter	Units	Resolution	Format (1)	Bits Needed	Class (2)	Frequency(3)	Safety Priority	Latency Bound(4)	Data Rate (bps)	Data Sharing From/To
Sensor Information	Vehicle Location	Lat/Lon	3 sec	BM+BCI	6 bytes	B	0.2	L	25	9.6	Nav/CDR
	# Seats Occupied	–	1 of 8	BM	8	B	0.2	L	25	1.6	ACN/CDR
	Rollover	–	yes/no	SE	1	B	1	L	25	1	ACN/CDR
	3-axis Accel.	g's	0.05 g	BCD	3 bytes	B	100	L	25	2400	ASC/CDR
	Airbag Status	–	yes/no	BM	10	B	1	L	25	10	SRS/CDR
	Time	H:M:S	1 sec	BM+BCI	3 bytes	B	1	L	25	24	Nav/CDR
	Steering Wheel Angle	deg. CW	360/255 deg.	BCD	8	B	200	L	25	1600	AWS/CDR
	Brake Hydraulic Press.	kPa	4 kPa	BCD	8	B	200	L	25	1600	ABS/CDR
	Tire Pressure	kPa	4 kPa	BCD	6 bytes	B	0.2	L	25	9.6	SMS/CDR
	Lamp Status	–	256 lamps	SE	8	B	1	L	25	8	SMS/CDR
	Odometer	mi.	0.1 mi.	BCD	17	B	0.2	L	25	3.4	Instr./CDR
	VIN #	–	–	ASCII	17 bytes	B	–	L	–	–	(local)
	Latch Status	–	yes/no	BM	8	B	1	L	25	8	Door BC/CDR
	Lock Status	–	yes/no	BM	8	B	1	L	25	8	Door BC/CDR
	Vehicle Speed	MPH	1 MPH	BCD	8	B	10	L	25	80	Instr./CDR
	Lane Position	cm	1 cm	BCD	8	B	100	L	25	800	CAS/CDR
	Belt Latch Status	–	lock/unlock	BM	8	B	1	L	25	8	BC/CDR
	Obstacle Distance	m	0.1 m	BCD	8	B	50	L	25	400	CAS/CDR
	Obstacle Direction	–	6 states	SE	3	B	50	L	25	150	CAS/CDR
	Headway Distance	m	0.1 m	BCD	11	B	50	L	25	550	CAS/CDR
Driver Inputs											
Driver Feedback	System Status	–	go/no-go	SE	1	B	0.1	M	500	0.1	CDR/ADI

1. BCD = Binary Coded Decimal; BCI = Binary Coded Integer; BM = Bit Mapped; SE = State Encoded; UAD = Unscaled Analog to Digital
2. Class A = Sensor sharing/body wiring reduction; Class B = processor information sharing (measured or derived); Class C = real time control
3. Messages per Second; I = Infrequent, approximate as 1 per sec.
4. End-to-end latency in msec. Latency is interpreted as the total time between sensing of a parameter and the initiation of appropriate control responses. Network latency is a subset of end-to-end latency.

Figure 5-39: Information Needs Worksheet for DC-1

SECTION 6: INTEGRATION OF IVHS CRASH AVOIDANCE SYSTEMS AND OTHER IN-VEHICLE ELECTRONICS

6.1 OVERVIEW OF THE ASSESSMENT APPROACH

1. The primary goal of this study is to assess automotive networks and network standards in order to determine the potential for integration of IVHS safety systems. A key result of the study is the identification of those network features and characteristics that can either help or hinder deployment of M-IS safety systems. While the goal is to evaluate networks and network standards, these assessments must consider the network information needs and flows associated with the IVHS safety systems of interest.

,2. Figure 6-1 illustrates the approach to the assessments performed during in this task. Assessments of automotive networks include both the networks and standards defined in Subtask 1, and the descriptions of key IVHS safety systems and their needs. The assessments of Figure 6-l proceed in two phases. Initially, the various automotive networks are evaluated against the needs of each of the key defined safety systems. A detailed description of the assessment criteria is given in Section III. Following the initial assessments, summary assessments are generated for each network/network standard in order to identify the key features and characteristics that can help or hinder deployment of IVHS safety systems.

3. The IVHS safety systems to be deployed on automobiles will not necessarily stand alone, independent of the network architecture of the automobile to which they are attached. Instead, they will be integrated to various degrees with the automotive CCNA as it exists at the time a particular IVHS system is deployed. To be as broadly applicable as possible, the evaluation process needs to, in some manner, take into account the alternative automotive network architectures into which IVHS safety systems can be integrated. Section 4 defined separate approaches to automotive network integration corresponding to near-, mid-, and far-term architecture implementations. As illustrated in Figure 6-1, the evaluations of this task include three scenarios for automotive network architecture integration corresponding to the implementation phases outlined above. These scenarios are intended to provide reference architecture frameworks in which the evaluations of IVHS safety system integration are performed.

6.2 ASSUMPTIONS

1. The use of scenarios to define levels of automotive architecture integration necessarily involves a significant number of assumptions. In the near- and mid-term scenarios, where integration among automotive systems is somewhat limited, it is reasonable to assume that IVHS safety systems must initially be implemented as individual systems or small groups of systems that are relatively independent of the rest of the automotive network architecture. However, when considering a far-term scenario for integration, no such simplifying assumptions are available. In the far term, it is likely that automobiles will have significant networking capabilities in which IVHS safety systems will play only a small part.

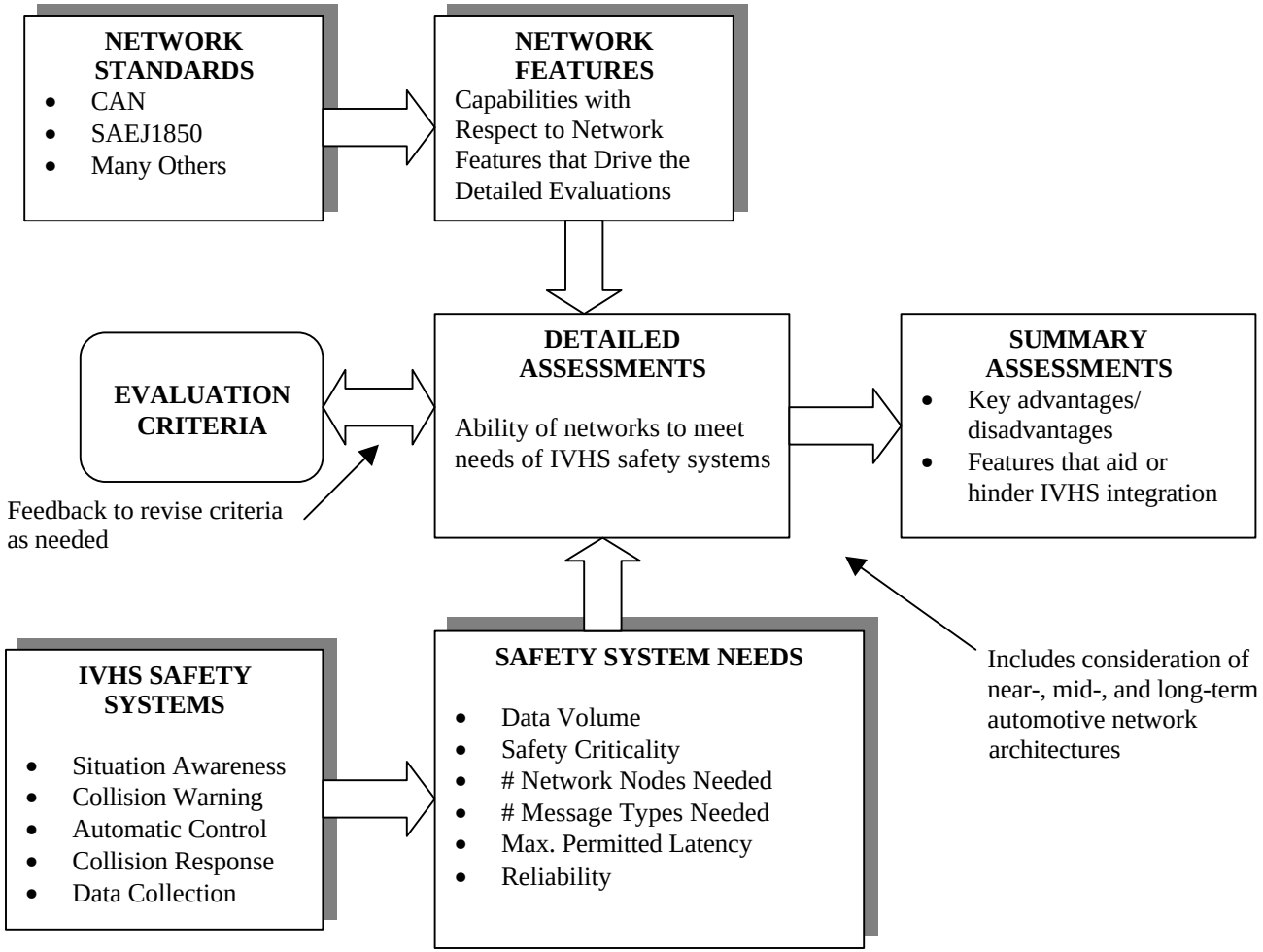

Figure 6-1: Overview of the Approach to the Assessments

2. To make detailed evaluations of far-term IVHS safety system integration issues, a detailed model for the automotive network architecture is defined. However, generation of such a model

6.3 ASSESSMENT CRITERIA

The assessment criteria used for the network evaluations of this task were defined as part of Subtask 2, and are summarized below. Figure 6-2 which follows the assessment criteria, summarizes the key network features that determine performance with respect to the evaluation criteria. The following list of key network features provides a guide to the information that is needed for each network standard under consideration in order to perform the assessments of this task (further details of the evaluation criteria are provided in the Subtask 2 interim report).

Assessment Criteria	Descrlptlon	Driving Features
Bus Access	Support to connection of new interfaces	• Bus media • Number of nodes supported • Implementation using open vs. closed standards
Support for information Sharing and Coordinated Control	Ability to support multiple control units interacting with common sensors and actuators	• Support for broadcast services • Support for data request protocols • Number of message types available • Availability of bus arbitration schemes
Bus Standard Support for Upgrades and Expansion	Bus standard expandability to support new functions and capabilities	• Ability to support new message types • Support for internetworking
Short Term Message Error Rate/Distribution	Does the network provide adequate error control and error recovery mechanisms	• Error Control: Cyclic redundancy checks/parity schemes • Support for "error free" communications protocols
Data/Message Throughput and Latency	Ability of network to support message load, meet data delay requirements	• Effective data rate • Delay as a function of load
Network Reliability	Long-term resistance to failure and the associated failure mechanisms including fault tolerance and fault isolation	• Ability to meet ISO Fault Tolerance recommendations for hardware • Software support for fault tolerance and fault isolation
cost	Factors which influence overall implementation cost	• Media • Processing requirements

Figure 6-2: Assessment Criteria Summary and Driving Network Features

6.3.1 Access to Candidate Network Bus

Connectivity to a network is the first necessary step in performing safety system integration. This criteria assesses the ability of a network to support connection of the interfaces required for the safety systems and scenarios under consideration.

1. In cases where a safety system is to be integrated into an existing network bus, does the media facilitate connection of new network nodes?

2. Is the number of nodes supported by the network bus adequate for the functions under consideration?

3. Is the bus implementation via an open standard or is the standard closed and effectively unavailable?

6.3.2 Support for Informatlon Sharing and Coordinated Control

In cases where a safety system must share sensors, ECUs, or actuators on a network bus, the bus must provide protocols supporting a variety of relatively complex service types. Significant issues which must be addressed in this situation include:

1. Number of message types provided by the protocol.

2. Does the network support data request protocols which would permit a newly added safety system to obtain data from existing sensors and control units?

3. Does the bus support broadcast services to allow data from a single sensor to be shared among multiple ECUs?

4. Does the bus support arbitration schemes that are sufficiently robust to permit multiple ECUs to control a shared actuator?

6.3.3 Bus Support to Upgrades and Expansion

Integration of a new IVHS safety system can impose high level requirements on a network bus not originally anticipated when the bus standard was created. Additionally, in cases where simply increasing the number of nodes on a network is insufficient to support a new system, expansion can often be achieved through the use if internetworking. Internetworking permits multiple buses to share data via the use of gateways or bridges to provide logical data paths between buses.

1. Are there message types available for any new functions that need to be added to the network? Can new message types be added to the candidate bus standard?

2. Is internetworking supported? Is the level of support provided adequate for the safety system under consideration?

6.3.4 Short-Term Message Error Rate, and Error Type/Distribution

Even in a properly operating network, there is always some probability that noise or interference corrupts individual data bits or messages on the network. In this criteria, the end-to-end error rate and distribution is evaluated, taking into account any existing mechanisms used to control the error rate. Network reliability (e.g., susceptibility to failure) is evaluated separately. Note that of the criteria below must take into account communications medium and EMI environment within the automobile.

1. What is the end-to-end message reliability/data integrity and is it satisfactory for the current application? Factors to be considered are bit error control strategies (including error detection), retransmission protocols, and end-to-end message accountability.

2. Are the characteristics of the network errors which occur suitable for the functions to be implemented?

3. Do the errors occur in bursts whose duration may be too long for our control system?

4. Is there erroneous data or lost data that is not detected?

6.3.5 Data/Message Throughput and Latency

Data throughput is defined as the rate at which information/messages can be moved across a network while latency measures the delay in transporting any one message through the network. These two factors can play a critical discriminating role in evaluating various network implementations. In particular, for digital implementations, support for time critical (e.g., real time) data types may be necessary for many safety related IVHS functions.

1. Is the network messaging rate adequate for all desired functions?

2. Does the message rate limit the rate at which sensor inputs or actuator control functions can occur? Consideration of the messaging rate must include not only the bit rate through the network, but also any overhead associated with the message structure, protocols, and channel sharing strategy.

3. Is there a maximum message latency that will not be exceeded within the network?

4. To what extent is the link suitable for any needed real time functions? Delay must include consideration of delay associated with channel access and network control functions as well as overhead associated with message structure and protocols (including potential retransmissions).

6.3.6 Network Reliability (Long-Term Failure Rate)

Unlike the previously mentioned network error rate criteria which is a short term measure of network performance, network reliability is a measure of long term susceptibility to network failure. Of key importance in evaluating the adequacy of a network's reliability is the purpose of the network. While failure of a network used for infrequent diagnostic purposes may not be critical, failure within a large network providing real time control of safety related functions may greatly impact safe operation of an automobile.

1. Network susceptibility to various failure mechanisms including: disconnects, node failures, and bus failures. The evaluation must consider the criticality of the functions to be implemented on the network.

2. Presence or absence of redundant signal paths and control mechanisms to permit their use.

6.3.7 Cost Factors

While many of the above evaluation criteria have some impact on the costs associated with integration of IVHS safety related systems into automotive networks, there are additional cost drivers which should be separately evaluated. In particular, as networks become more standardized, the costs associated with using a standard network implementation are expected to fall, so that use of a standard network implementation (versus a customized network implementation) becomes a key driver in keeping costs down.

1. Is current network implementation consistent with an available standard? If not, complexity of the implemented protocol and interfaces becomes the key cost driver.

2. Cost of hardware.

3. Cost of media.

4. Complexity of physical connection to existing network (e.g., is a new connection point available or must the wire/cable be spliced? Do new bridges need to be added?).

6.4 NETWORK SCENARIOS FOR IVHS SAFETY SYSTEM INTEGRATION

This section builds on previous results to evaluate concepts for greater integration of IVHS in-vehicle safety systems. These concepts may include the network integration of two or more functionally related IVHS systems, the network integration all proposed IVHS systems, or the integration of several IVHS systems with an existing in-vehicle network. These scenarios are respectively envisioned as near term, mid-term, and far-term, based on their complexity and the demands placed on the candidate networking standards.

6.4.1 Near-Term Scenarios

1. The near-term scenarios are closely related to the results given in previous sections. In this case, it is envisioned that two or more functionally related IVHS systems are integrated using a Class A, I3 or C network. The intent is to allow the IVHS system to have access to needed sensor information such as vehicle speed, with no significant increase in the existing vehicle's wiring plant or control complexity, and possibly a decrease in the number of sensors and actuators. Integration should not require a redesign of the existing vehicle systems or adversely affect vehicle safety, driveability, or reliability.

2. Three proposed integrated architectures were identified and are depicted in Figures 6-3 through 6-l 1, along with the information needs worksheets and data flows. An integrated Automatic Control system was not assumed for the near term since this technology is expected to take at least several more years to mature.

3. Figure 6-3 is an integrated Situation Awareness system (ISAS). It combines the vehicle dynamics-related processing (proximity and headway detection, driver alertness) into a single processing module with a single network interface. The Safety Monitoring System module is retained as a separate component since its functions do not overlap with the Situation Awareness Processor (SAP). This approach eliminates much functional overlap in the Situation Awareness category, resulting in an efficient, ten-node network with 6704 bps of data traffic, whereas the individual Situation Awareness systems had an aggregate of 21 nodes and 8104 bps of data traffic.

4. Figure 6-6 is an integrated Collision Warning system (ICWS). All of the vehicle dynamics-related processing for Collision Warning are combined into a single processing module (the CWS shown in the figures) to eliminate functional overlap. The resulting network has five nodes and 3797 bps of data traffic, where the individual systems had an aggregate of 12 nodes and 8665 bps of data traffic.

5. Figure 6-9 integrates the Automated Collision Notification system with the Collision Data Recording system. All safety-related status monitoring and reporting is performed by the SMS module. This architecture reduces the aggregate node count from 16 to 12; data traffic is reduced from 18,771 bps to 12,990 bps. This system uses the same integrated CWS module as was used above in the integrated Collision Warning system to reduce functional overlap.

6. Table 6-l summarizes the estimated real time and total data traffic loads for these systems, both with and without protocol overhead bits. The first two integrated systems (ISAS and ICWS) remain dominated by real time traffic, as were the corresponding standalone systems in these categories. The integrated ACN/CDR system has no real time data, as was true of the corresponding standalone systems.

Category: Situation Awareness

System: Integrated Situation Awareness Systesm

Total Network Traffic	
4 ms latency	2800 bps/350 mps
10 ms latency	98.7 bps/20.2 mps
25 ms latency	
100 ms latency	53 bps/8 mps
500 ms latency	11.4 bps/0.4 mps
Total	2963.1 bps/378.6 mps
# Transmitting Nodes	10
# Message Types	20
Traffic Allocation (by Node)	
1	5 bps/0.2%
2	5 bps/0.2%
3	0.8 bps/–
4	1605 bps/54.3%
5	10.4 bps/0.4%
6	905 bps/30.6%
7	305 bps/l 0.3%
8	28 bps/0.8%
9	30 bps/l %
10	68.8 bpsl2.3%

System Architecture

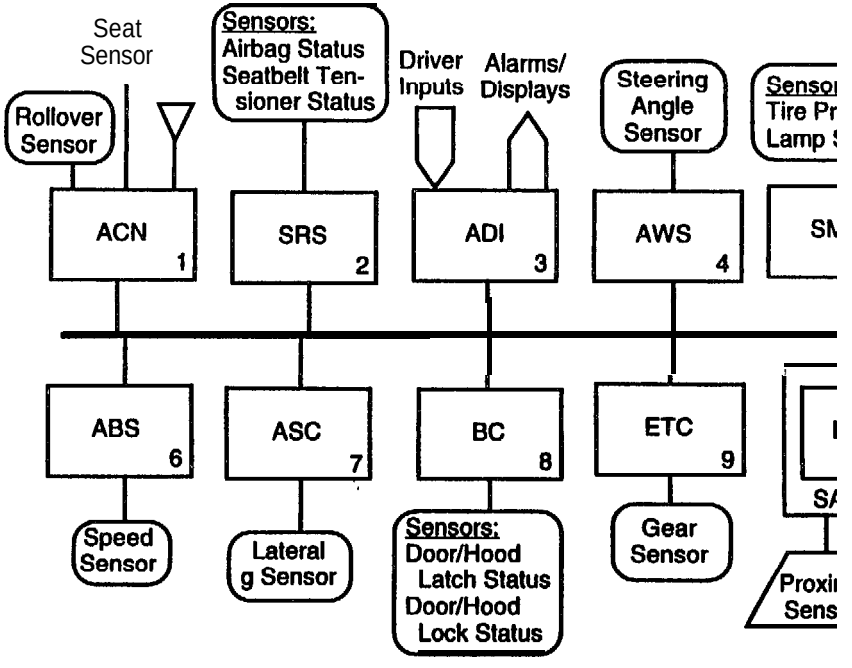

ABS = Anti-lock Braking System
ACN = Automated Collision Notification
ADI = Advanced Driver Interface
ASC = Active Suspension Controller
AWS = All Wheel Steering
BC = Body Controller
DAP = Driver Alertness Processing
ETC = Electronic Transaxle Controller
PHP = Proximity
SAP = Situation Awareness Processor
SMS = Safety Monitoring System
SRS = Supplemental Restraint System

Protocol Requirements Summary

Non-overhead bits needed: 13 min. (use varlable-size data frame, 2 byte min.)

Minimum data rate:	6704 bps
Nodes to support::	10
Source nodes:	10
Message types:	21
Latency allocation:	94.8% 4 ms, 3.3% 10 ms, 1.5% 100 ms, 0.4% 500 ms
Ack. needed:	Yes

Figure 6-3: System Specification Work Sheet for Integrated Situation Awareness System (ISAS)

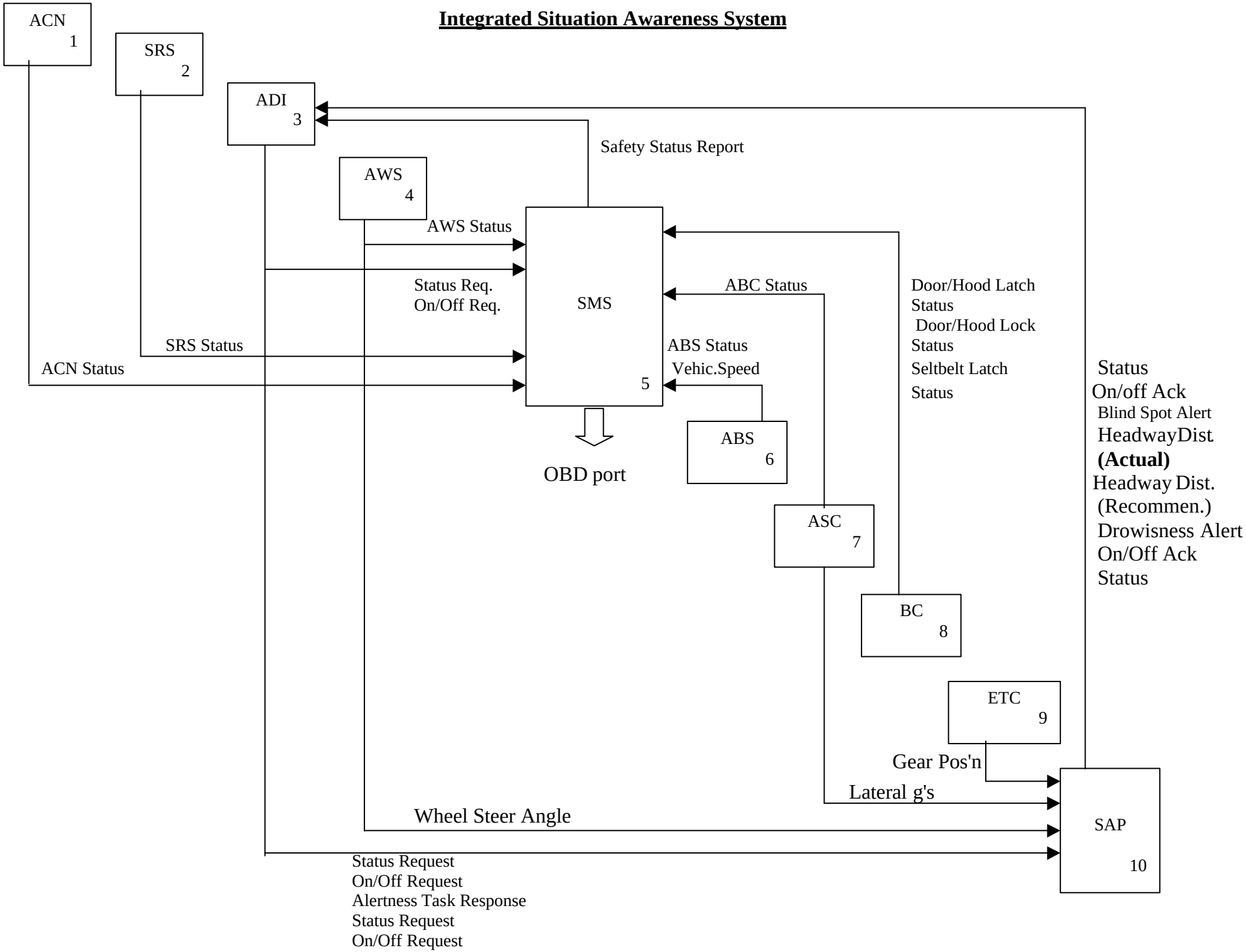

Figure 6-4: Data Flows for ISAS

Category: Situation Awareness

System: Integrated Situation Awareness System

Information Category	Parameter	Units	Resolution	Format (1)	Bits Needed	Class (2)	Frequency(3)	Safety Priority	Latency Bound(4)	Data Rate (bps)	Data Sharing From/To
Sensor Information	SRS Status	–	32 fault codes	SE	5	A	1	M	100	5	SRS/SMS
	ABS/TCS Status	–	32 fault codes	SE	5	A	1	M	100	5	ABS/SMS
	ACN Status	–	32 fault codes	SE	5	A	1	M	100	5	ACN/SMS
	Tire Pressure	PSI	1 PSI	BCD	36	A	1	M	100	36	(local)
	Door/Hood Lock Status	–	10 locks/2 states	BM	10	A	1	M	100	10	BC/SMS
	Seatbelt Latch Status	–	8 belts/2 states	BM	8	A	1	M	100	8	BC/SMS
	Lamp Status	–	255 lamps/2 states	SE	8	A	0.1	M	100	0.8	(local)
	Door/Hood Latch Status	–	10 latches/2 states	BM	10	A	1	M	100	10	BC/SMS
	AWS Status	–	32 fault codes	SE	5	A	1	M	100	5	AWS/SMS
	ASC Status	–	32 fault codes	SE	5	A	1	M	100	5	ASC/SMS
	Transmission Gear	–	8 states	SE	3	B	10	M	10	30	ETC/PHP
	Vehicle Speed	m/s	0.1 m/s	BCD	9	C	100	M	4	900	ABS/PHP
	Obstacle Location	–	6 states	SE	3	B	100	M	10	300	(local)
	Obstacle Distance	m	0.1 m	BCD	8	B	100	M	10	800	(local)
	Headway Distance	m	0.1 m	BCD	11	B	300	M	10	3300	(local)
	Wheel Steer Angle	deg CW	0.5 deg	BCD	8	C	200	H	4	1600	AWS/SAP
	Lateral Acceleration	g	0.05 g	BCD	6	C	50	H	4	300	ASC/SAP
Driver Inputs	Manual Status Request	–	4 states	SE	2	A	0.1	M	500	0.2	ADI/SMS,SAP
	On/Off Request	–	4 states	SE	2	A	0.1	L	500	0.2	ADI/SMS,SAP
	Alertness Task Response	–	16 states	SE	4	B	0.1	H	10	0.4	ADI/SAP
Driver Feedback	Status Reports	–	PSI or go/no-go	BCD, BM, SE	106	A	0.1	M	500	10.6	SMS,SAP/ADI
	On/Off Acks	–	4 systems	BM	4	A	0.1	L	500	0.4	SMS,SAP/ADI
	Blind Spot Alert	–	6 zones	SE	3	C	0.1	H	10	0.3	SAP/ADI
	Actual Headway Distance	ft	1 ft	BCD	8	C	4	H	10	32	SAP/ADI
	Recommended Headway	ft	1 ft	BCD	8	B	4	M	10	32	SAP/ADI
	Drowsiness Alert	–	4 states	SE	2	C	2	H	10	4	SAP/ADI

1. BCD = Binary Coded Decimal; BCI = Binary Coded Integer; BM = Bit Mapped; SE = State Encoded; UAD = Unscaled Analog to Digital
2. Class A = Sensor sharing/body wiring reduction; Class B = processor information sharing (measured or derived); Class C = real time control
3. Messages per Second; I = Infrequent, approximate as 1 per sec.
4. End-to-end latency in msec. Latency is interpreted as the total time between sensing of a parameter and the initiation of appropriate control responses. Network latency is a subset of end-to-end latency.

Figure 6-5: Information Needs Work Sheet for Integrated Situation Awareness System

Category: Collision Warning

System: Road Departure Warning System

Total Network Traffic	
4 ms latency	8108 bps/958 mps
10 ms latency	44 bps/12 mps
25 ms latency	-
100 ms latency	0.1 bps/0.1 mps
500 ms latency	0.9 bps/0.5 mps
Total	8153 bps/970.6 mps
# Transmitting Nodes	7
# Message Types	14
Traffic Allocation (by Node)	
1	56.2 bps/1.9%
2	900 bps/30%
3	0.8 bps/–
4	1600 bps/54%
5	400 bps/13.5%

System Architecture

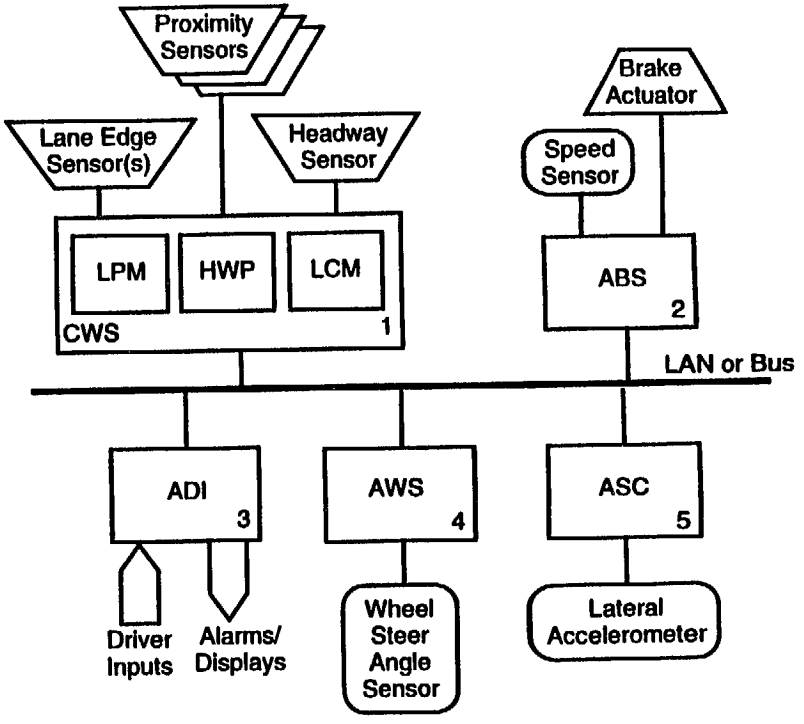

Protocol Requirements Summary

Non-overhead bits needed:	12 (use variable size data field)
Minimum data rate:	10,997 bps
Nodes to support::	5
Source nodes:	5
Message types:	8
Latency allocation:	4 ms: 99.4%; 10 ms: 0.5%
	others: negl.
Ack. needed:	Yes

Abbreviations:
ABS = Anti-Lock Brakes
ADI = Advanced Driver Interface
ASC = Active Suspension Control
AWS = All-Wheel Steering
CWS = Collision Warning System
HWP = Headway Processing
LCM = Lane Change/Merge Processing
LPM = Lane Position Monitoring

Figure 6-6: System Specification Work Sheet for Integrated Collision Warning System (ICWS)

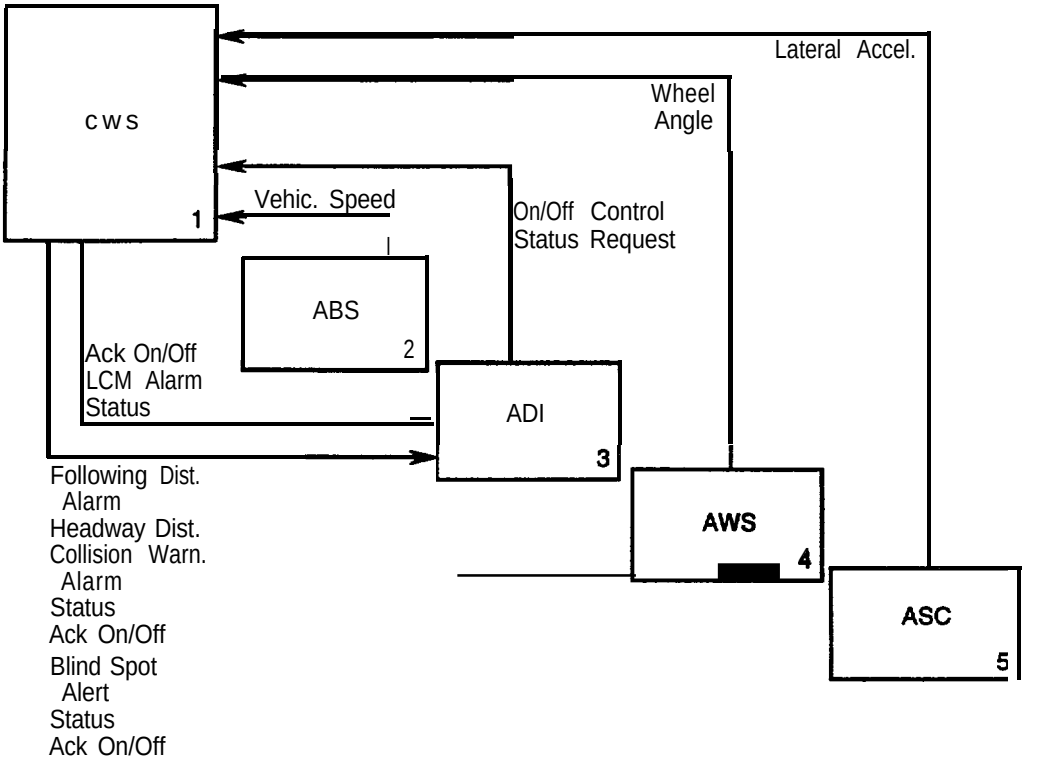

Figure 6-7: Data Flows for ICWS

Category: Collision Warning

System: Integrated Collision Warning System

Information Category	Parameter	Units	Resolution	Format (1)	Bits Needed	Class (2)	Frequency(3)	Safety Priority	Latency Bound(4)	Data Rate (bps)	Data Sharing From/To
Sensor Information	Lane Edge Proximity	cm	1 cm	BCD	8	C	100	H	4	800	(local)
	Vehicle Speed	m/s	0.1 m/s	BCD	9	C	100	H	4	900	ABS/CWS
	Wheel Steer Angle	deg CW	0.5 deg	BCD	8	C	200	H	4	1600	AWS/CWS
	Lateral Acceleration	g's	0.05 g	BCD	8	C	50	H	4	400	ASC/CWS
	Headway Distance	m	0.1 m	BCD	11	C	300	H	4	3300	(local)
	Obstacle Location	–	6 states	SE	3	C	100	H	4	300	(local)
	Obstacle Distance	m	0.1 m	BCD	8	C	100	H	4	800	(local)
Actuator Responses											
Driver Inputs	On/Off	–	3 subsystems	BM	3	A	0.1	L	500	0.3	ADI/CWS
	Status Request	–	3 subsystems	BM	3	A	0.1	L	500	0.3	ADI/CWS
	Req. Headway Dist.	–	1 of 2 states	SE	1	A	0.1	L	500	0.1	ADI/HWP
	Req. Headway Alarm	–	1 of 2 states	SE	1	A	0.1	L	500	0.1	ADI/HWP
Driver Feedback	Driver Alert Alarm	–	on/off	SE	1	C	4	H	10	4	CWS/ADI
	System Status	–	3 subsystems	SE	1	A	0.1	L	500	0.1	CWS/ADI
	On/Off Ack	–	3 subsystems	SE	1	A	0.1	L	100	0.1	CWS/ADI
	Headway Distance	ft	1 ft	BCD	9	C	4	M	10	36	CWS/ADI
	Following Dist. Alarm	–	on/off	SE	1	C	4	M	10	4	CWS/ADI
	Collision Warning Alarm	–	on/off	SE	1	C	4	H	4	4	CWS/ADI
	Blind Spot Alert	–	on/off	SE	1	C	4	M	4	4	CWS/ADI

1. BCD = Binary Coded Decimal; BCI = Binary Coded Integer; BM = Bit Mapped; SE = State Encoded; UAD = Unscaled Analog to Digital
2. Class A = Sensor sharing/body wiring reduction; Class B = processor information sharing (measured or derived); Class C = real time control
3. Messages per Second; I = infrequent, approximate as 1 per sec.
4. End-to-end latency in msec. Latency is interpreted as the total time between sensing of a parameter and the initiation of appropriate control responses. Network latency is a subset of end-to-end latency.

Figure 6-8: Information Needs Work Sheet for Integrated Collision Warning System

Category: Collision Response and Post-Collision Analysis

System: Integrated ACN/Collision Data Recorder

Total Network Traffic	
4 ms latency	–
10 ms latency	–
25 ms latency	12,471.2 bps/967.5 mps
100 ms latency	8.4 bps/0.1 mps
500 ms latency	0.5 bps/0.5 mps
Total	12,480 bps/968 mps
# Transmitting Nodes	12
# Message Types	24
Traffic Allocation (by Node)	
1	11.2 bps/0.1%
2	33.6 bps/0.3%
3	0.2 bps/–
4	1600 bps/12.8%
5	0.1 bps/–
6	1600 bps/12.8%
7	17.6 bps/0.1%
8	2400 bps/19.2%
9	83.4 bps/0.7%
10	4810 bps/38.5%
11	24 bps/0.2%
12	1900/15.2%

Protocol Requirements Summary

Non-overhead bits needed:	15 (use variable size data frame)
Minimum data rate:	12,998 bps
Nodes to support::	12
Source nodes:	12
Message types:	20
Latency allocation:	100% 25 ms
Ack. needed:	Yes

System Architecture

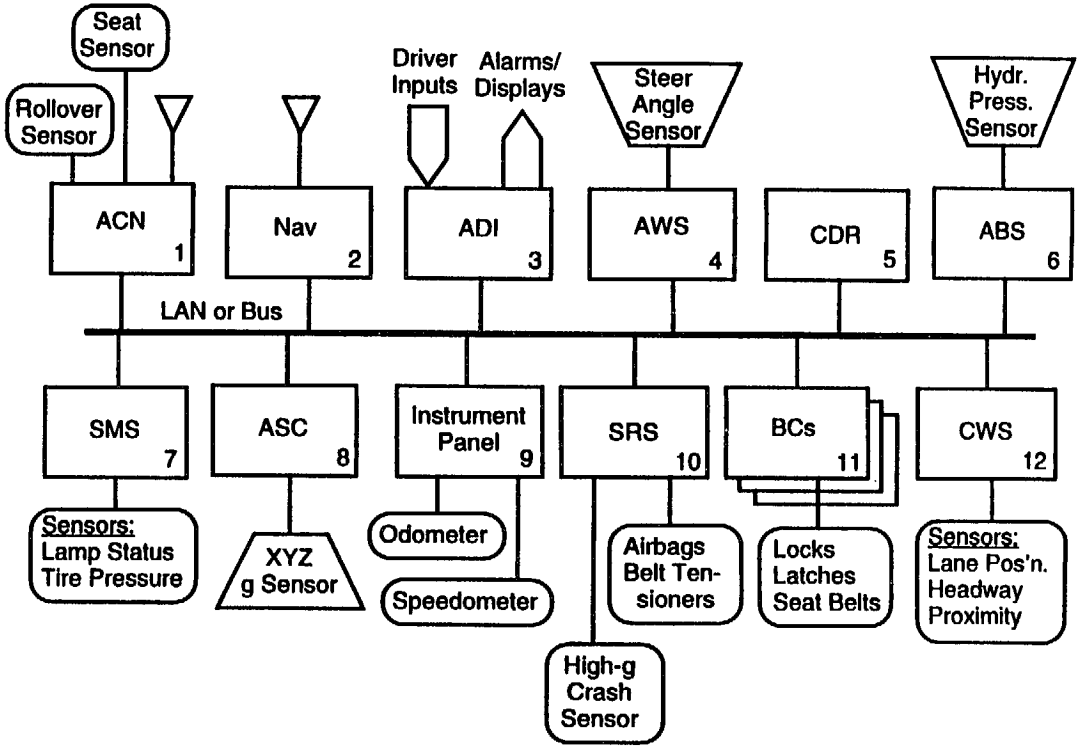

ABS = Anti-lock Braking System
ACN = Automated Collision Notification
ADI = Advanced Driver Interface
ASC = Active Suspension Controller
AWS = All Wheel Steering
BC = Body Controller
CDR = Collision Data Recorder
CWS = Collision Warning System
Nav = Navigation System
SMS = Safety Monitoring System
SRS = Supplemental Restraint System

Figure 6-9: System Specification Work Sheet for Integrated ACN/CDR System

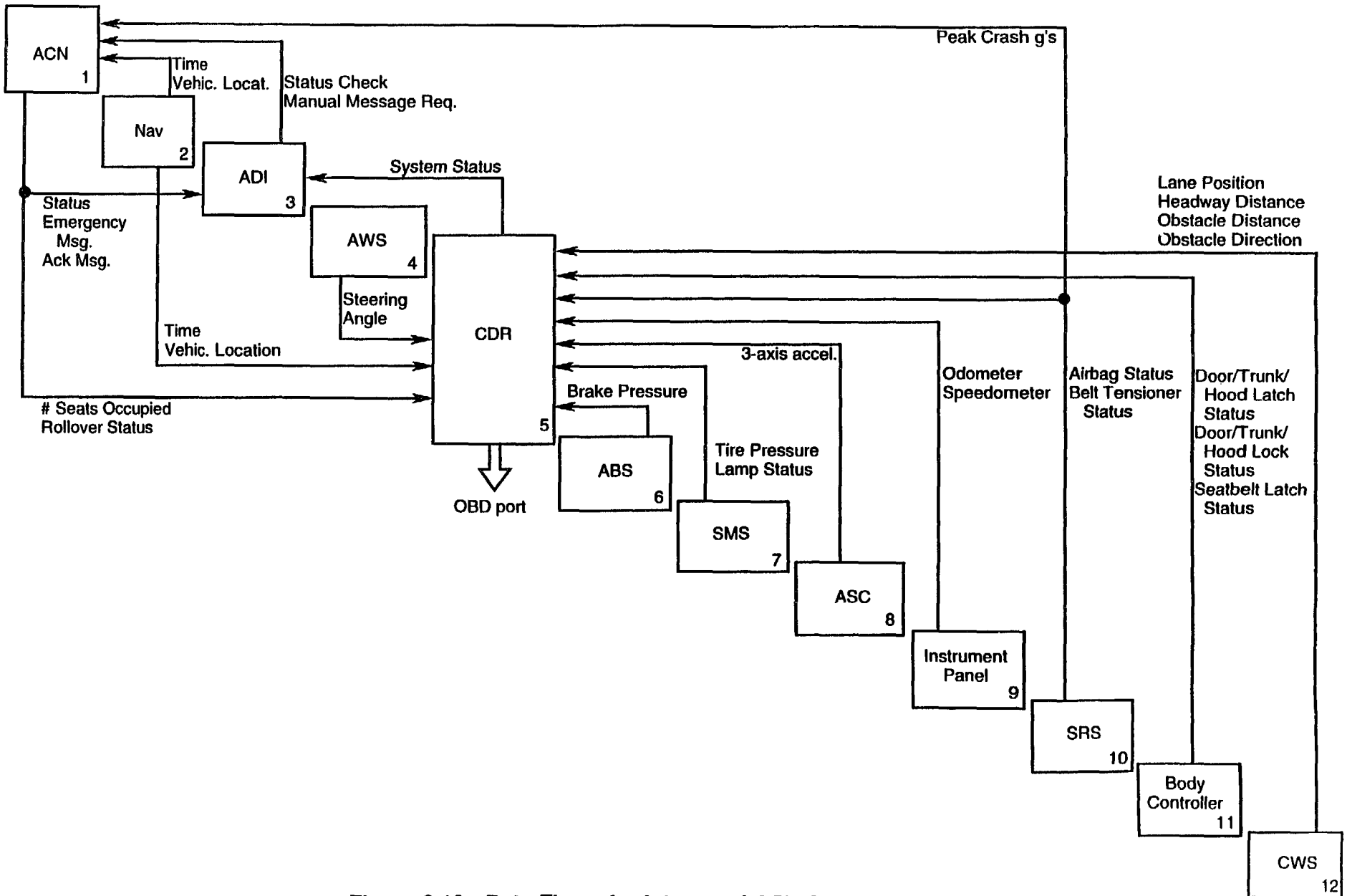

Figure 6-10: Data Flows for Integrated ACN/CDR System

Category: Collision Response and Post-Collision Data Analysis

System: Integrated ACN/Collision Data Recorder

Information Category	Parameter	Units	Resolution	Format (1)	Bits Needed	Class (2)	Frequency(3)	Safety Priority	Latency Bound(4)	Data Rate (bps)	Data Sharing From/To
Sensor Information	Vehicle Location	Lat/Lon	3 sec	BM+BCI	6 bytes	B	0.2	L	25	9.6	Nav/CDR,ACN
	# Seats Occupied	–	1 of 8	BM	8	B	0.2	L	25	1.6	ACN/CDR
	Rollover	–	yes/no	SE	8	B	1	L	25	1	ACN/CDR
	Peak Collision g's	g's	0.05 g	BCD	3 bytes	B	200	H	25	4800	SRS/ACN,CDR
	3-axis Accel.	g's	0.05 g	BCD	3 bytes	B	100	L	25	2400	ASC/CDR
	Airbag Status	–	yes/no	BM	10	B	1	L	25	10	SRS/CDR,ACN
	Time	H:M:S	1 sec	BM+BCI	3 bytes	B	1	L	25	24	Nav/CDR,ACN
	Steering Wheel Angle	deg. CW	360/255 deg.	BCD	8	B	200	L	25	1600	AWS/CDR
	Brake Hydraulic Press.	kPa	4 kPa	BCD	8	B	200	L	25	1600	ABS/CDR
	Tire Pressure	kPa	4 kPa	BCD	6 bytes	B	0.2	L	25	9.6	SMS/CDR
	Lamp Status	–	256 lamps	SE	8	B	1	L	25	8	SMS/CDR
	Odometer	mi.	0.1 mi.	BCD	17	B	0.2	L	25	3.4	Instr./CDR
	VIN #	–	–	ASCII	17 bytes	B	–	L	–	–	(local)
	Latch Status	–	yes/no	BM	8	B	1	L	25	8	Door BC/CDR
	Lock Status	–	yes/no	BM	8	B	1	L	25	8	Door BC/CDR
	Vehicle Speed	MPH	1 MPH	BCD	8	B	10	L	25	80	Instr./CDR
	Lane Position	cm	1 cm	BCD	8	B	100	L	25	800	CWS/CDR
	Belt Latch Status	–	lock/unlock	BM	8	B	1	L	25	8	BC/CDR
	Obstacle Distance	m	0.1 m	BCD	8	B	50	L	25	400	CWS/CDR
	Obstacle Direction	–	6 states	SE	3	B	50	L	25	150	CWS/CDR
	Headway Distance	m	0.1 m	BCD	11	B	50	L	25	550	CWS/CDR
Driver Inputs	Send Emergency Message	–	1 of 2 states	SE	1	B	0.1	H	100	0.1	ADI/ACN
	Status Check	–	1 of 4 states	SE	2	A	0.1	L	500	0.2	ADN,CDR/ADI
Driver Feedback	System Status	–	1 of 4 states	SE	2	A	0.1	M	500	0.1	CDR/ADI
	ACN Message	–	–	all	84	B	0.1	H	100	8.4	ACN/ADI
	Ack Msg. Sent	–	1 of 2 states	SE	1	B	0.1	M	500	0.1	ACN/ADI

1. BCD = Binary Coded Decimal; BCI = Binary Coded Integer; BM = Bit Mapped; SE = State Encoded; UAD = Unscaled Analog to Digital
2. Class A = Sensor sharing/body wiring reduction; Class B = processor information sharing (measured or derived); Class C = real time control
3. Messages per Second; I = Infrequent, approximate as 1 per sec.
4. End-to-end latency in msec. Latency is interpreted as the total time between sensing of a parameter and the initiation of appropriate control responses. Network latency is a subset of end-to-end latency.

Figure 6-11: Information Needs Work Sheet for Integrated ACN/CDR System

Table 6-1: Summary of Network Traffic Loads for the Proposed Near-Term Integrated IVHS In-Vehicle Safety Systems (Assumes 48 Bits of Overhead per Message)

Systems	Real-Time Traffic, bps (Data Only/Data+Overhead)	Total Traffic, bps (Data Only/Data+Overhead)
Integrated Situation Awareness System (ISAS)	3600/20,400	6704/24,877
Integrated Collision Warning System (ICWS)	3664/20,848	3797/21,586
Integrated ACN/CDR System (IACS)	–	12,990/59,454

6.4.2 Mid-Term Scenarios

1. The next evolutionary step in system integration is to combine the proposed IVHS safety systems into a single, integrated system. This would eliminate all sensor and actuator redundancies, and potentially reduce the amount of wiring and driver interfaces. This system is shown in Figures 6; 12 and 6-13 and includes an integrated automatic control capability, in addition to the integrated systems from the previous paragraphs, The information needs and data flows are shown in Figures 6-14 and 6-15. This system is somewhat complex, but it should be noted that nine of 14 control modules shown are part of other existing in-vehicle systems. The integrated IVHS functions only contribute five additional nodes.

2. The total estimated data traffic (excluding protocol overhead) for this system is 23.5 kbps, a considerable reduction from the nearly 61 kbps of aggregate traffic from all of the standalone IVHS systems. Node count is reduced from an aggregate of 63 to 14, reflecting extensive reuse of driver interfaces and existing in-vehicle data sources. Integrating redundant or related IVHS functions into single modules also reduces the node count significantly. For example, all IVHS vehicle dynamics-related processing has been integrated into a Collision Avoidance System processing module. This module has three sub-modules: one each for Situation Awareness Processing (SAP), Collision Warning Processing (CWP), and Automatic Control Processing (ACP).

3. Also note that data traffic in the integrated system is much more evenly distributed with regard to latency needs, rather than being dominated by real time traffic as many of the standalone systems are. This allows the same network to carry more traffic, since the additional traffic can be assigned the lower priority addresses or message types without significantly affecting the latency statistics of the higher priority traffic.

4. A fully integrated IVHS system may not be feasible in the mid-term. Another option is to integrate selected IVHS functions based on established integration criteria. Factors favoring integration include:

   a. Use of the same sensor information or derived data (to eliminate redundancy).

   b.. Similar or complementary functionality, or opportunity to eliminate redundant functionality.

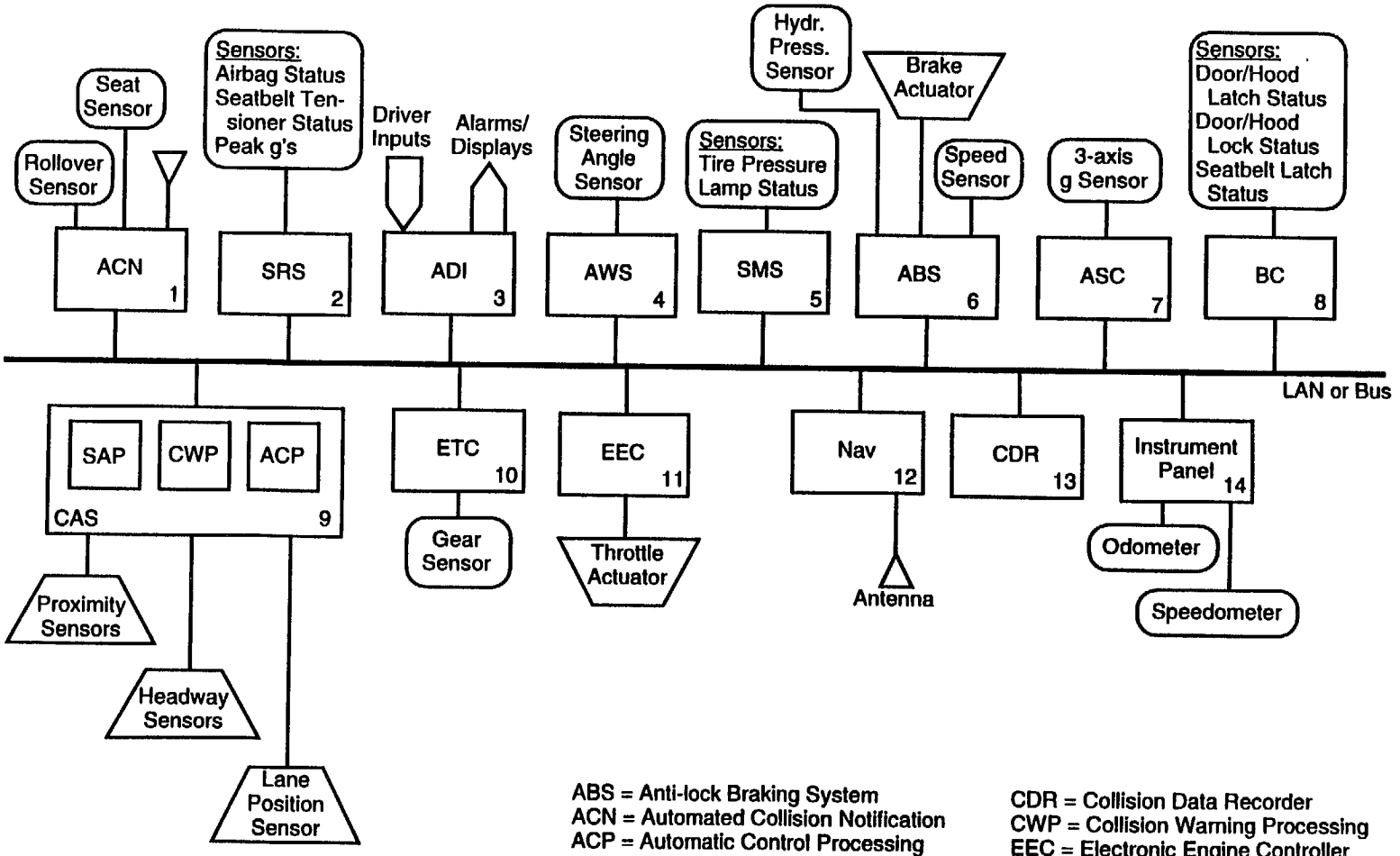

ABS = Anti-lock Braking System
ACN = Automated Collision Notification
ACP = Automatic Control Processing
ADI = Advanced Driver Interface
ASC = Active Suspension Controller
AWS = All Wheel Steering
BC = Body Controller
CAS = Collision Avoidance System
CDR = Collision Data Recorder
CWP = Collision Warning Processing
EEC = Electronic Engine Controller
ETC = Electronic Transaxle Controller
Nav = Navigation System
SAP = Situation Awareness Processing
SMS = Safety Monitoring System
SRS = Supplemental Restraint System

Figure 6-12: System Architecture for Fully Integrated IVHS System

System: Integrated IVHS Systesm

Total Network Traffic	
4 ms latency	5800 bps/770 mps
10 ms lantency	4404.7 bps/526.2 mps
25 ms latency	5300 bps/31 0.2 mps
100 ms latency	4965.6 bps/21 7.8 mps
500 ms latency	11.5 bps/O.5 mps
Total	20,556.8 bps/l 624.7 mps
# Transmitting Nodes	12
# Message Types	**54**
Traffic Allocation (by Node)	
1	**16.1 bps/0.1%**
2	**4806 bps/23.3%**
3	**26.1 bps/0.1%**
4	**1605 bps/7.8%**
5	**47.5 bps/0.2%**
6	**3305 bps/16.1%**
7	**1205 bps/5.9%**
8	**28 bps/0.1%**
9	**7498 bps/36.5%**
10	**30 bps/0.1%**
11	
12	33.6 bps/O.2%
13	
14	1100 bps/5.4%

Protocol Requirements Summary

Non-overhead bits needed:	13 min. (use varfable-size data frame, 1 byte min.)
Minimum data rate:	23,496 bps
Nodes to support::	14
Source nodes:	12
Message types:	54
Latency allocation:	28.2% 4 ms, 21.8% 10 ms, 25.8% 25ms, 24.2% 100 ms, 0.06% 500 ms
Ack. needed:	Yes

Figure 6-13: Network Needs Summary for the Integrated IVHS System

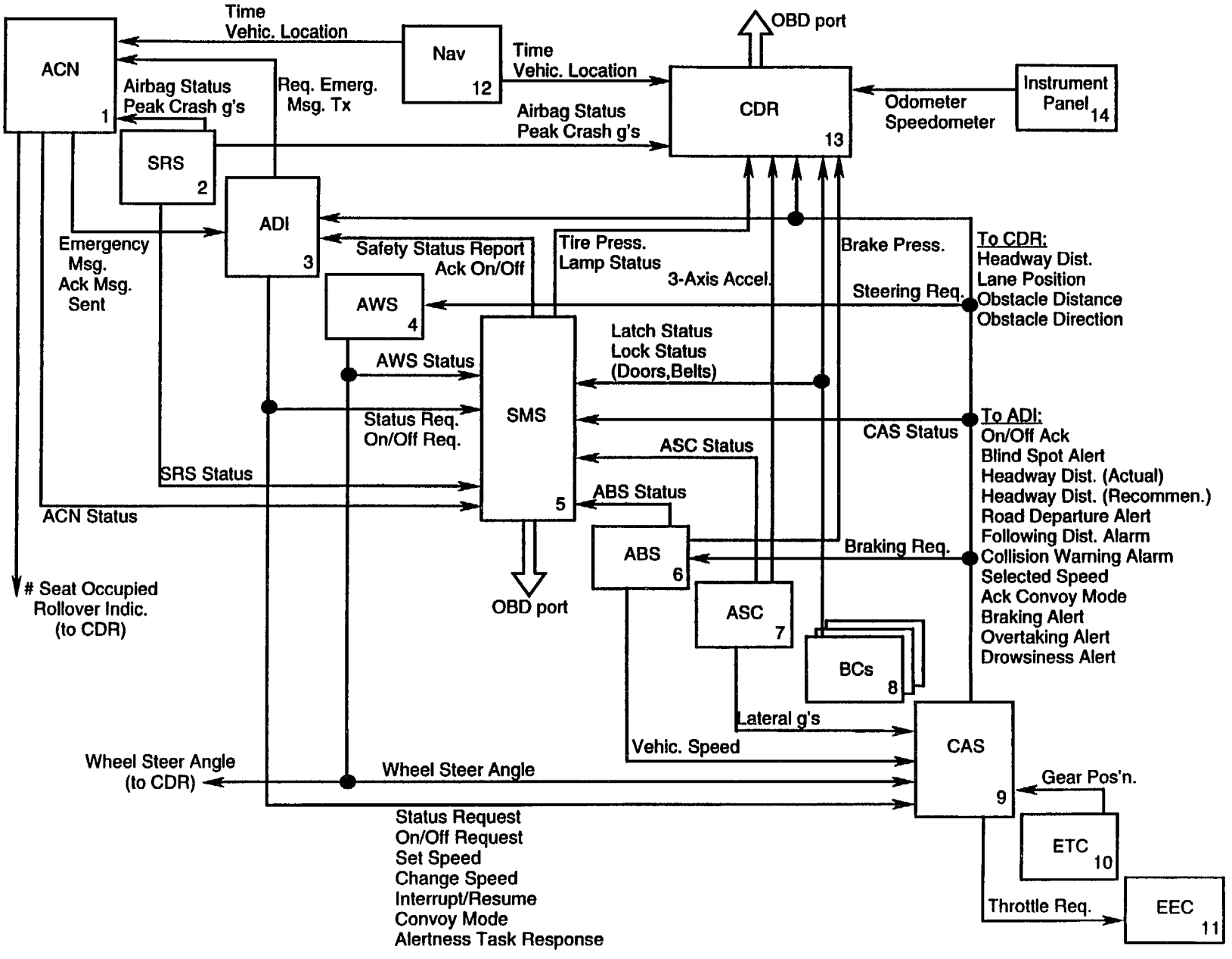

Figure 6-14: Data Flows for Fully Integrated IVHS System

System: **Integrated Situation Awareness System**

Information Category	Parameter	Units	Resolution	Format (1)	Bits Needed	Class (2)	Frequency (3)	Safety Priority	Latency Bound (4)	Data Rate (bps)	Data Sharing From/To
Sensor Information	SRS Status	-	32 fault codes	SE	5	A	1	M	100	5	SRS/SMS
	ABS/TCS Status	-	32 fault codes	SE	5	A	1	M	100	5	ABS/SMS
	CAN Status	-	32 fault codes	SE	5	A	1	M	100	5	ACM/SMS
	Tire Pressure	PSI	1 PSI	BCD	36	A	1	M	100	36	SMS/CDR
	Door/Hood Lock Status	-	10 locks/2 states	BM	10	A	1	M	100	10	BC/SMS,CDR
	Lamp Status	-	255 lamps/2 states	SE	8	A	0.1	M	100	0.8	SMS/CDR
	Door/Hood/Belts Latch Status	-	10 latches/ 8 belts	BM	18	A	1	M	100	18	BC/SMS,CDR
	AWS Status	-	32 fault codes	SE	5	A	1	M	100	5	AWS/SMS
	ASC Status	-	32 fault codes	SE	5	A	1	M	100	5	ASC/SMS
	Transmission Gear	-	8 states	SE	3	B	10	M	10	30	ETC/CAS
	Vehicle Speed	m/s	0.1 m/s	BCD	9	C	100	M	4	900	ABS/CAS
	Obstacle Location	-	6 states	SE	3	B	100	M	10	300	CAS/CDR
	Obstacle Distance	m	0.1 m	BCD	8	B	100	M	10	800	CAS/CDR
	Headway Distance	m	0.1 m	BCD	11	B	300	M	10	3300	CAS/CDR
	Wheel Steer Angle	deg CW	0.5 deg	BCD	8	C	200	H	4	1600	AWS/CAS, CDR
	Lane Position	m	0.05 m	BCD	8	C	100	H	4	800	CAS/CDR
	Lateral Acceleration	g	0.05 g	BCD	6	C	50	H	4	300	ASC/CAS
	CAS Status	-	32 fault codes	SE	5	A	1	M	100	5	CAS/SMS
Driver Inputs	Manual Status Request	-	4 states	SE	2	A	0.1	M	500	0.2	ADI/SMS,CAS
	On/Off Request	-	4 states	SE	2	A	0.1	L	500	0.2	ADI/SMS,CAS
	Alertness Task Responses	-	16 states	SE	4	B	0.1	H	10	0.4	ADI/CAS
Driver Feedback	Safety Status Reports	-	(multiple types)	BCD, BM,SE	94	A	0.1	M	500	10.6	SMS/ADI
	On/Off Ack	-	1 system	BM	1	A	0.1	L	500	.01	SMS/ADI
	On/Off Acks	-	3 subsystem	BM	3	A	0.1	L	500	0.3	CAS/ADI
	Blind Spot Alert	-	6 zones	SE	3	C	0.1	H	10	0.3	CAS/ADI
	Actual Headway Distance	ft	1 ft	BCD	8	C	4	H	10	32	CAS/ADI
	Recommended Headway	ft	1 ft	BCD	8	B	4	M	10	32	CAS/ADI
	Drowsiness Alert	-	4 states	SE	2	C	2	H	10	4	CAS/ADI

1. **BCD** = Binary Coded Decimal; **BCI** = Binary Coded Integer; BM = Bit Mapped **SE** = State Encoded; **UAD** = Unscaled Analog to Digital
2. **Class A** = Sensor sharing/body wiring reduction; **Class B** = Processor informa-ion sharing (measured or derived); **Class C** = real time control
3. Messages per Second; **I** = Infrequent, approximate as 1 per sec
4. End-to-and latency in msec. Latency is interpreted as the local time between sensing of a parameter and the initiation of appropriate control responses. Network latency is a subset of end-to-and latency.

Figure 6-15: Information Needs Work Sheet for Fully Integrated IVHS System

System: **Integrated Situation Awareness System**

Information Category	Parameter	Units	Resolution	Format (1)	Bits Needed	Class (2)	Frequency (3)	Safety Priority	Latency Bound (4)	Data Rate (bps)	Data Sharing From/To
Sensor Information	Brake presser	KPa	4 kPa	BCD	8	B	200	L	25	3300	ABS/CDR
	3-Axis Accel.	g's	0.05 g	BCD	3 bytes	B	100	L	25	900	ASC/CDR
	Odometer	Ml	0.1 ml	BCD	3	B	0.2	L	25	300	Instr./CDR
	Speedometer	MPH	1 MPH	BCD	8	B	10	L	25	800	Instr./CDR
	Vehicle Location	Lat/Lon	3 sec	BM+BCI	6 bytes	B	0.2	H	100	9.6	Nav/CAN,CDR
	# Seats Occupied	-	1 of 8	SE	3	B	0.2	M	100	0.6	ACN/CDR
	Rollover	-	yes/no	SE	1	B	1	M	100	1	CAN/CDR
	Peak g's	g's	0.05 g	BCD	3 bytes	B	200	H	100	4800	SRS/ACN,CDR
	Airbag Indicator	-	yes/no	SE	1	B	1	M	100	1	SRS/CAN,CDR
	Time	H:M:S	1 sec	BM+BCI	3 bytes	B	1	H	100	24	Nav/CAN,CDR
Actuator Responses	Braking Request	-	32 levels	UAD	5	C	100	H	4	500	CAS/ABS
	Throttle Request	-	32 levels	UAD	5	C	20	H	4	100	CAS/EEC
	Steering Request	Deg CW	0.05 deg	BCD	8	C	200	H	4	1600	CAS/AWS
Driver Inputs	Send Message Manually	-	1 of 2 states	SE	1	C	0.1	H	500	0.1	ADI/CAN
	Set Speed	MPH	1 MPH	BCD	8	A	1	L	100	8	ADI/CAS
	Change Speed	MPH	1 MPH	BCD	8	B	1	M	100	8	ADI/CAS
	Interrupt/Resume Speed	-	1 of 2 states	SE	1	B	1	M	100	1	ADI/CAS
	Set Convoy Mode	-	1 of 2 states	SE	1	A	1		100	1	ADI/CAS
Driver Feedback	Emergency Message	-	-	all	84	B	0.1	M	100	8.4	ACN/ADI
	Convoy Mode Ack	-	on/off	SE	1	A	0.1	L	100	0.1	CAS/ADI
	Selected Speed	MPH	1 MPH	BDC	8	A	1	L	100	8	CAS/ADI
	Following Distance Alert	-	on/off	SE	1	C	4	H	10	4	CAS/ADI
	Braking Alert	-	on/off	SE	1	C	4	H	10	4	CAS/ADI
	Overtaking Vehicle Alert	-	on/off	SE	1	C	4	H	10	4	CAS/ADI
	Road Departure Alert	-	on/off	SE	1	C	4	H	10	4	CAS/ADI
	Ack. Emerg. Msg. Sent	-	1 of 2 states	SE	1	A	0.1	M	100	0.1	ACN/ADI

1. **BCD** = Binary Coded Decimal; **BCI** = Binary Coded Integer; BM = Bit Mapped **SE** = State Encoded; **UAD** = Unscaled Analog to Digital
2. **Class A** = Sensor sharing/body wiring reduction; **Class B** = Processor informa-ion sharing (measured or derived); **Class C** = real time control
3. Messages per Second; **I** = Infrequent, approximate as 1 per sec
4. End-to-and latency in msec. Latency is interpreted as the local time between sensing of a parameter and the initiation of appropriate control responses. Network latency is a subset of end-to-and latency.

Figure 6-15: Information Needs Work Sheet for Fully Integrated IVHS System (cont'd)

c. Similar environmental constraints such as size, weight, power supply, EMI requirements, location in the vehicle, temperature, shock and vibration.

d. Capability to make failure modes less harmful or less complex.

e. Capability to balance or optimize the network traffic load in terms of latency, throughput, priorities, address utilization, etc.

f. Opportunity to reduce vehicle wiring.

g. To assist in applying the above criteria, Table 6-2 was prepared. This table shows numerous instances where the same sensor information is used by different systems, or the same actuator inputs are made. Integrating these systems using networking concepts could therefore eliminate much functional overlap, without requiring significant redesigns of the existing standalone systems. This may be a candidate for future follow-on studies.

6.4.3 Far-Term Scenarios

1. In the far-term, a highly integrated in-vehicle network architecture is envisioned. This may be either a single network connecting multiple distributed control modules (including IVHS control modules), or a group of subnetworks connected to a backbone network through routers or "firewalls". One or more of these subnets may support IVHS functions. Other subnets may support Class A or Class B functions. At this point, it does not appear likely that individual sensors or actuators will be equipped with direct network interfaces, except possibly on a limited basis where the sensor information is widely used by multiple modules (e.g., wheel speed).

2. The future existing vehicle network can be expected to be relatively heavily loaded with non-IVHS traffic. For example, in a case study presented in SAE-940133, a 1 Mbps CAN network connects nine control modules. This network supports 90 message types ranging from entertainment and climate control functions to real time braking and engine control. Total traffic load is 297 kbps, most of which (89%) is low-latency Class C sensor and actuator data. This is a proposed system and has not been demonstrated in an actual vehicle. The simulations performed on this network were somewhat limited, and it is not yet clear whether it can meet all of the Class C latency requirements, or whether additional network traffic could be accommodated. No reliable conclusions could be reached about the feasibility of this type of heavily loaded, highly integrated network. Further study and simulation-aided analysis would be required.

T = Original Transmitter
U = User
DC = Direct Control
IC = Indirect Control

IVHS Safety Systems	Sensor Information																										Actuator Response						
	Obstacle Direction	Obstacle Distance	Transmission Gear	Headway Direction	Headway Distance	Vehicle Speed	Tire Pressure	Lock Status	Latch Status	Lamp Status	Wheel Steer Angle	Eye Closure	Lane Position	Lateral Acceleration	Longitudinal Acceleration	Vertical Acceleration	Seat Occupancy	Vehicle Rollover Indicator	Airbag Status	Seatbelt Tensioner Status	Seatbelt Latch Status	Time	Brake Hydraulic Pressure	Odometer Reading	Vehicle Location	Peak Crash g-Force	Throttle Control	Ignition Timing	Brakes	Steering	Airbag Trigger	Send Message
SA-1: Proximity Detection System	T	T	U			U																											
SA-2: Headway Detection System					T	U																											
SA-3: Automobile Diagnostic System							T			T																							
SA-4: Driver Monitoring System						U						T																					
CW-1: Road Departure Warning						U							T																				
CW-2: Headway Warning System					U	U																											
CW-3: Intersection Crash Avoidance																																	
CW-4: Lane Change / Merge Warning	U	U				U																											
AC-1: Autonomous Cruise Control	U	U			U	U																					IC		IC				
AC-2: Collision Avoidance System	U	U		T	U	U																							IC	IC			
CR-1: Automated Collision Notification																	T	T	U			U			U	U					U	DC	
DC-1: Collision Data Recorder	U	U		U		U	U	U	U	U	U		U	U	U	U	U	U	U		U	U	U	U		U					U		
SRS - Supplemental Restraint Sys.																			T							T					DC		
Navigation Sys.																						T			T							DC	
Body Controller/Instrument Panel						U		T	T															T									
EEC - Electronic Engine Controller																											DC	DC					
ABS/TCS - Anti-lock Brakes/Traction						T					U			U	U								T						DC				
ASC - Active Suspension Control						U					U			T	T	T																	
AWS - All-Wheel Steering						U					T																			DC			
ETC - Electronic Transaxle Control			T			U																					U						

Table 6-2: Matrix Depicting Joint Utilization of Sensors and Actuators by Proposed IVHS Safety Systems and Other In-Vehicle Systems

SECTION 7: ASSESSMENT OF IVHS CRASH AVOIDANCE SYSTEM INTEGRATION

7.1 DETAILED ASSESSMENTS

This section presents the results of the evaluations of the proposed IVHS systems against the candidate protocol standards. Because of the similarities between certain standards, the tables containing the evaluation results group the protocols by data rate and arbitration scheme. The groupings are as follows:

1. CSMA/NDA protocols:

   a. 1 Mbps and above.

   b. 100 to 500 kbps.

   c. 20 to 50 kbps.

   d. Below 20 kbps.

2. CSMA/CD protocols.

3. Polling protocols.

4. Token passing protocols.

7.1.1 Near Term

7.1 .1 .1 Standalone IVHS Systems

1. The results of the protocol evaluations for individual IVHS systems are shown in Tables 7-l through 7-7. Only the systems that satisfied the basic bandwidth and/or latency requirements for the listed standards are included in the tables. It was assumed that the IVHS systems have only those interfaces to in-vehicle systems needed to support the proposed IVHS functions and driver interfaces. No integration with existing in-vehicle networks was assumed for the near term. Note that in general, the network traffic loads are relatively modest in comparison to the nominal bus speeds of most of the candidate protocol standards.

2. The information needs worksheets presented in Section 5 show that network traffic is dominated by real-time messages in most of the IVHS systems. These messages are assumed to require an end-to-end system delay of 4 msec or less. The timing budgets from Section 2 showed that a typical control system must allocate approximately 3 msec of this budget to sensor and actuator data conditioning and control algorithm processing. This leaves only 1 msec for network buffer delays and network latency for real-time messages,

Protocol Class: CSMA/NDA - 1 Mbps

Applicable Standards: Furukawa, CAN, DDB, VAN, Advanced PALMNET

	IVHS Safety System	Evaluation Criteria: Physical Access	Support for Shared Data	Network Access: New Messages & Data Sources	Short Term Message Error Rate & Distribution	Data/Message Throughput & Latency	Network Reliability	Cost	Summary
Situation Awareness	SA-1: Proximity Detection System	2	2	2	2-3	3	2-3	2	2+
	SA-2: Headway Detection System	2	2	2	2-3	3	2-3	2	2+
	SA-3: Safety Monitoring System	2	2	2	2-3	3	2-3	2	2+
	SA-4: Driver Diagnostics	2	2	2	2-3	2	2-3	2	2+
Collision Warning	CW-1: Road Departure Warning	2	2	2	2-3	3	2-3	2	2+
	CW-2: Headway Detection System	2	2	2	2-3	3	2-3	2	2+
	CW-4: Lane Change & Merge	2	2	2	2-3	3	2-3	2	2+
Automatic Control	AC-1: Autonomous Cruise Control	2	2	2	2-3	1	2-3	2	1
	AC-2: Control for Collision Avoidance	2	2	2	2-3	1	2-3	2	1
Collision Response	CR-2: Automated Collision Notiofication	2	2	2	2-3	3	2-3	2	2+
Data Collection	DC-1: Collision Data Recorder	2	2	2	2-3	3	2-3	2	2+
	Notes	1	2	3	4		5		6

Legend
1 = Unacceptable
2 = Adequate
3 = More than Adequate

Notes:

1. Physical layer not fully specified. Minimum of 16 nodes can be supported.
2. Data requesting not explicitly supported; can be made via message type and data fields. Bus topologies must support broadcast.
3. Subnetwork addressing not supported.
4. DDB uses parity checking (~~both~~ rated 2). Others use CRC (rated 3).
5. Fault tolerance not specified for DDB (rated 2). Others rated 3.
6. All IVHS systems except AC-1 and AC-2 can be supported.

Table 7-1: Evaluations of IVHS Safety Systems Against High Speed CSMA/NDA Protocols

Protocol Class: CSMA/NDA - 100 kbps to 500 kbps

Applicable Standards: ABUS, DDB, VAN, Advanced PALMNET

	IVHS Safety System	Physical Access	Support for Shared Data	Network Access: New Messages & Data Sources	Short Term Message Error Rate & Distribution	Data/Message Throughput & Latency	Network Reliability	Cost	Summary
		Evaluation Criteria							
Situation Awareness	SA-3: Safety Monitoring System	2	2	2	3	3	2-3	2	2+
Collision Response	CR-2: Automated Collision Notiofication	2	2	2	3	3	2-3	2	2+
Data Collection	DC-1: Collision Data Recorder	2	2	2	3	2-	2-3	2	2
	Notes	1	2	3	4	5	6	7	8

Legend
1 = Unacceptable
2 = Adequate
3 = More than Adequate

Notes:

1. Physical layer not fully specified. Minimum of 16 nodes can be supported.
2. Data requesting not explicitly supported; can be made via message type and data fields. Bus topologies must support broadcast.
3. Subnetwork addressing not supported.
4. ABUS does not have error detection field (rated 2). Others use CRC or FCS (rated 3).
5. Latency and buffer delays in this class of protocol are not considered adequate for real time, safety-critical data.
6. Fault tolerance not specified for ABUS and DDB (rated 2). VAN and Advanced PALMNET rated 3.
7. ABUS is least expensive to implement (rated 3).
8. Only syste having no real time data loading are evaluated (see note 5 also).

Table 7-2: Evaluations of IVHS Safefy Systems Agalnst 100 kbps to 500 kbps CSMA/NDA Protocols

Protocol Class: CSMA/NDA 20 kbps to 50 kbps

Applicable Standards: CAN, DDB, VAN, PALMNET, i-Four, J1850, SCP

	IVHS Safety System	Physical Access	Support for Shared Data	Network Access: New Messages & Data Sources	Short Term Message Error Rate & Distribution	Data/Message Throughput & Latency	Network Reliability	Cost	Summary
		Evaluation Criteria							
Situation Awareness	SA-3: Safety Monitoring System	2	2	2	3	3	2+	3	2+
Collision Response	CR-2: Automated Collision Notification	2	2	2	3	3	2 +	3	2+
	Notes	1	2	3		4	5		6

Legend
1 = Unacceptable
2 = Adequate
3 = More than Adequate

Notes:

1. Physical layer not fully specified.
2. Data requesting not explicitly supported; can be made via message type and data fields. Bus topologies must support broadcast.,
3. Subnetwork addressing not supported.
4. Latency and buffer delays in this class of protocol are not considered adequate for real time, safety-critical data.
5. PALMNET rated 3 for fault tolerance; others rated 2.
6. Only systems having no real time data and traffic loads below 50 kbps are evaluated in this table (see note 4 also).

Table 7-3: Evaluations of IVHS Safefy Systems Against 20 kbps to 50 kbps CSMA/NDA Protocols

Protocol Class: CSMA/NDA - below 20 kbps

Applicable Standards: J1850, CCD, DLCS

	IVHS Safety System	Evaluation Criteria: Physical Access	Support for Shared Data	Network Access: New Messages & Data Sources	Short Term Message Error Rate & Distribution	Data/Message Throughput & Latency	Network Reliability	Cost	Summary
Situation Awareness	SA-3: Salety Monitoring System	2	2	2	3	3	2	3	2+
	Notes	1	2	3		4	5		6

Legend
1 = Unacceptable
2 = Adequate
3 = More than Adequate

Notes:

1. Physical layer not fully specified.
2. Data requesting not explicitly supported; can be made via message type and data fields. Bus topologies must support broadcast.
3. Subnetwork addressing not supported.
4. Latency and buffer delays in this class of protocol are not considered adequate for real time, safety-critical data.
5. Fault tolerance not specified for CCD and DLCS.
6. Only systems having no real time data and traffic loads below 20 kbps are evaluated In this table (see note 4 also).

Table 7-4: Evaluations of IVHS Safety Systems Agalnst Low Speed CSMA/NDA Protocols

Protocol Class: CSMA/CD

Applicable Standards: ACP, MICS

	IVHS Safety System	Physical Access	Support for Shared Data	Network Access: New Messages & Data Sources	Short Term Message Error Rate & Distribution	Data/Message Throughput & Latency	Network Reliability	Cost	Summary
		Evaluation Criteria							
Situation Awareness	SA-3: Safety Monitoring System	2	2	2	3	2	2	3	2+
	Notes	1	2	3		4	5		6

Legend
1 = Unacceptable
2 = Adequate
3 = More than Adequate

Notes:

1. Physical layer not fully specified
2. Data requesting not explicitly supported; can be made via message type and data fields. Bus topologies must support broadcast.
3. Subnetwork addressing not supported.
4. Latency and buffer delays In this class of protocol are not considered adequate for real time, safety-critical data.
5. Fault tolerance not specified for MICB.
6. Only systems having no real time data and traffic loads below 10 kbps are evaluated In this table (see note 4 also).

Table 7-5: Evaluations of IVHS Safety Systems Against *Low Speed CSMA/CD Protocols*

Protocol Class: Polling - 4 Mbps

Applicable Standards: AUTOLAN

	IVHS Safety System	Physical Access	Support for Shared Data	Network Access: New Messages & Data Sources	Short Term Message Error Rate & Distribution	Data/Message Throughput & Latency	Network Reliability	Cost	Summary
		Evaluation Criteria							
Situation Awareness	SA-3: Safety Monitoring System	2	2	1	3	3	2	2	2–
Collision Response	CR-2: Automated Collision Notiofication	2	2	1	3	3	2	2	2–
Data Collection	DC-1: Collision Data Recorder	2	2	1	3	3	2	2	2–
	Notes	1	2	3		4			6

Legend
1 = Unacceptable
2 = Adequate
3 = More than Adequate

Notes:

1. Physical layer not fully specified. AUTOLAN supports 127 nodes.
2. Data requesting not explicitly supported; can be made via data field. Bus topologies must support broadcast.
3. Subnetwork addressing not supported, Only 16 bits available for **data** and message type.
4. Latency and buffer delays in this class of protocol are assumed to be similar to token passing uncertain whether real lime traffic can be supported.
5. Fault tolerance not **specified for AUTOLAN**
8. Only systems having **no real** time data loading are evaluated (see note 4 also).

Table 7-6: Evaluations of IVHS Safety Systems Against Polling Protocols

Protocol Class: Token Passing - 250 kbas and 2 Mbps

Applicable Standards: Toyota (250 kbps), GM (2 Mbps)

	IVHS Safety System	Evaluation Criteria: Physical Access	Support for Shared Data	Network Access: New Messages & Data Sources	Short Term Message Error Rate & Distribution	Data/Message Throughput & Latency	Network Reliability	Cost	Summary
Situation Awareness	SA-3: Safety Monitoring System	2	2	2-3	3	3	2	2	2+
Collision Response	CR-2: Automated Collision Notiofication	2	2	2-3	3	3	2	2	2+
Data Collection	DC-1 : Collision Data Recorder	2	2	2-3	3	3	2	2	2+
	Notes	1	2	3		4			6

Legend
1 = Unacceptable
2 = Adequate
3 = More than **Adequate.**

Notes:

1. Physical layer not fully specified. GM supports 32 nodes, Toyota supports 16.
2. Data requesting not explicitly supported; can be made via data field. Bus topologies must support broadcast.
3. Subnetwork addressing not supported. GM has extensive support for new message types and extended data fields.
4. Latency and buffer delays in this class of protocol are not considered adequate for real time, safety critical traffic. Latency Is sensitive to number of nodes and message periodicify.
5. Fault tolerance not well-specified.
6. Only systems having no real time data loading are evaluated (see note 4 also).

Table 7-7: Evaluations of IVHS Safety Systems Against Token Passing Protocols

3. If half of the 1 msec limit is allocated to buffer delays, and the average message size is 64 bits, then the data rate must be at least 256 kbps. While simulations of automotive networks are not widely available, some results suggest (see SAE 940363 and 940133, for example) that such latencies can only be achieved with lightly loaded, 1 Mbps CSMA/NDA networks. Given the targeted assurance level of only 1 message in 10^{12} exceeding the latency bound, only those messages in the highest 10% of the priority space would be assured of meeting the required latencies. If, for example, 12 high priority, low latency message types are needed, then the message type field would be seven bits, which allows 128 different message types to exist on the network.

4. At 1 Mbps, a typical 64-bit message would experience 128 psec of total buffer delay, including both transmit and receive buffers. A 1 Mbps CSMA/NDA bus loaded with 250 kbps of traffic could support the 10% of the traffic (25 kbps) having the highest message priorities within the real-time constraints. Ignoring the 48 bits of CAN message overhead, this equates to only 6.25 kbps of actual real-time application layer data throughput. This is acceptable for most of the near-term IVHS systems, except for AC-l and AC-2.

5. For those IVHS systems not dominated by low-latency traffic (SA-3, CR-2, and DC-l), more of the candidate protocols can meet the latency requirements. In this case, the main restriction on the candidate protocols is the data rate. To avoid the unbounded latency condition, network loading should be kept under 50%. Factoring in protocol overhead of approximately 75%, the effective data throughput is roughly 12.5% of the nominal bus speed. A 41.6 kbps SAE J1850 bus would then have an effective data throughput of 5200 bps, with an average message latency of 100 msec at a certainty of 1 in 10^6. This could support the SA-3 and CR-2 systems. DC-l would require a 100 kbps standard.

6. In summary, several high-speed CSMA/NDA automotive protocols can support most of the IVHS systems having high-priority, low-latency message traffic. These include CAN and the related Furukawa standard, DDB, VAN, and PALMNET. Of these, CAN, Furukawa, and PALMNET deserve higher consideration because of their superior error detection and fault tolerance properties, and the availability of off-the-shelf silicon products. Network loading should be kept under 25% so that network latencies of less than 1 msec can be achieved. The token passing and polling protocols do not appear to be capable of satisfying this constraint, although they are more than adequate for non-real-time or "near-real-time" systems.

7. For IVHS systems that do not have low-latency messages, lower speed standards such as SAE 51850 (or equivalent) may provide adequate bandwidth. However, data rate, traffic load, and allocation of message types must be tailored to the specific application. In general, traffic loads must be less than 50% of the nominal bus clock speed so that lower priority messages do not experience unbounded latency conditions.

7.1.1.2 Integrated IVHS Systems

1. The results of the protocol evaluations for the integration of functionally related IVHS systems is shown in Table 7-8 and Table 7-9. The ISAS and ICWS systems are dominated by real-time traffic and require the 1 Mbps CSMA/NDA protocols to satisfy the long term latency requirements. The integrated ACN/CDR system contains no real-time traffic and can be supported by any of the protocols that operate at or above 125 kbps. This includes CAN, Furukawa, ABUS, PALMNET, DDB, VAN, AUTOLAN, Toyota token bus, and GM token slot.

Protocol Class: CSMA/NDA > 100 kbps

Applicable Standards: Furukawa, ABUS, CAN, DDB, VAN. Advanced PALMNET

IVHS Safety System	Evaluation Criteria: Physical Access	Support for Shared Data	Network Access: New Messages & Data Sources	Short Term Message Error Rate & Distribution	Data/Message Throughput & Latency	Network Reliability	Cost	Summary
Near Term								
Integrated Situation Awareness System	2	2	2	2-3	1-3	2-3	2	2+
Integrated Collision Warning System	2	2	2	2-3	1-3	2-3	2	2+
Integrated Automated Collision Notification/ Collision Data Recorder System	2	2	2	2-3	3	2-3	2	2+
Mid-Term								
Integrated IVHS System	2	2	2	2-3	1	2-3	2	1
Notes	1	2	3	4	5	6		

Legend
1 = Unacceptable
2 = Adequate
3 = More than Adequate

Notes:

1. Physical layer not fully specified. Minimum of 16 nodes can be supported.
2. Data requesting not explicitly supported; can be made via message type and data fields. Bus topologies must support broadcast.
3. Subnetwork addressing not supported.
4. ABUS has no CRC; DDB uses parity checking (both rated 2). Others use CRC (rated 3).
5. ISAS and ICWS require 1 MbpsCSMA/NDA. Mid-term Integrated IVHS system cannot be supported.
6. Fault tolerance not specified for ABUS and DDB (rated 2). Others rated 3.

Table 7-8: Evaluations of IVHS Safety Systems Against High Speed CSMA/NDA Protocols

Protocol Class: Tokenpassing, Polling

Applicable Standards: Token: GM, Toyota
Polling: AUTOLAN

IVHS Safety System	Evaluation Criteria: Physical Access	Support for Shared Data	Network Access: New Messages & Data Sources	Short Term Message Error Rate & Distribution	Data/Message Throughput & Latency	Network Reliability	Cost	Summary
Near Term								
Integrated Situation Awareness System	2	2	2	3	I-2	1-2	2	1-2
Integrated Collision Warning System	2	2	2	3	1-2	1-2	2	I-2
Integrated Automated Collision Notification/ Collision Data Recorder System	2	2	2	3	3	3	2	2+
Mid-Term								
Integrated IVHS System	2	2	2	3	I-2	1-2	2	I-2
Notes	1	2	3		4	5		

Legend
1 = Unacceptable
2 = Adequate
3 = More than Adequate

Notes:

1. Physical layer not fully specified. Minimum of 16 nodes can be supported.
2. Data requesting not explicitly supported; can be made via message type and data fields. Bus topologies must support broadcast.
3. Subnetwork addressing not supported.
4. Performance of ISAS, ICWS, and mid-term Integrated IVHS system using token passing and polling standards has not been fully characterized; latency values for real time traffic may not be acceptable.
5. Fault tolerance for these standards is not fully specified.

Table 7-9: Evaluations of Integrated IVHS Safety Against High Speed Token Passing and Polling Protocols

2. The token passing and polling protocols are more than adequate for the integrated ACN/CDR system, given their relatively high data rates and bounded latencies. However, the suitability of these protocols for the ISAS and ICWS systems cannot be stated precisely. The few available simulations indicate that the minimum latencies for even lightly loaded token networks are in the range of several msec. This is not acceptable, given the 1 msec latency assumption for real-time traffic. These types of protocols hold the most promise for accommodating the need for increased bandwidth, but their long term latency performance in response to varying traffic loads and system architectures needs further study and simulation.

7.1.2 Mid Term

1. The results of the protocol evaluations for the. mid-term, fully integrated IVHS system show real-time message traffic of 43.9 kbps, and a total message traffic load of 111.1 kbps. Given the 50% loading guideline to avoid unbounded latency conditions, this effectively eliminates from consideration any protocol with a data rate less than 250 kbps. This leaves only CAN, Furukawa, ABUS, PALMNET, DDB, VAN, AUTOLAN, Toyota token bus, and GM token slot for consideration (see Tables 7-8 and 7-9).

2. Using the 1 msec limit on combined network latency and buffer delays for real-time traffic, the high speed CSMA/NDA networks are acceptable only when lightly loaded (i.e., less than 25%), operated at bus speeds of 1 Mbps, and carrying 25 kbps or less of real-time traffic. The GM token passing protocol does not appear to be acceptable, based on simulation results reported in SAE 940363; even when lightly loaded, the high priority messages may experience several msec of network latency. The AUTOLAN protocol could not be fully evaluated because latency performance figures were not available.

3. Based on the above results, existing automotive protocols are not suitable for a fully integrated IVHS system. While the high speed protocols (250 kbps and above) have adequate bandwidth, they cannot assure the needed latencies on a long-term basis (e.g., 10 years of assumed automobile operation). They are only suitable in the mid-term for integrated networks having real-time data traffic loads less than 25 kbps. Systems with no real-time traffic could be supported with up to approximately 500 kbps of message traffic using CSMA/NDA, or in excess of 1 Mbps using token passing or polling.

7.1.3 Far Term

1. Far-term automotive network architectures can be expected to be highly integrated, requiring support for safety critical functions, high data rates, and significant volumes of low latency network traffic. Large volumes of non-time critical data may also be present. None of the existing network standards can be considered adequate for such applications unless they are significantly modified.

2. To support future networks, existing automotive protocols may need to be extended in some manner. Tradeoff analyses must be made between the cost of developing and implementing internetworking devices, the cost of developing and implementing a high data rate, low latency networking standard, or the risks associated with relaxing the network timing and latency constraints. Another option would be to further investigate the performance limits of the AUTOLAN polling protocol. Its 4 Mbps data rate is promising, but little information about its latency and throughput performance is available in the open literature.

3. It should also be noted that in many systems, message traffic is not evenly distributed among all nodes. For token and polling protocols, latency performance can then be fine tuned by assigning additional logical addresses to the nodes that are dominated by real-time traffic. These higher priority nodes would receive the token or poll more frequently, independent of message type, with correspondingly lower latency per message. For a given traffic volume, latency in a token passing or polling network is primarily a function of how many nodes are in the network, and how many logical addresses are assigned to each node. For CSMA/NDA protocols, latency is mostly a function of the relative priority of the message.

4. To support highly integrated architectures, future protocol standards will also require a fully specified physical layer, and full specification of fault tolerance requirements, both for the bus and within the attached nodes. Such a standard must also anticipate all safety-related failure modes and effects to ensure that no network or node failure can endanger the safety of the vehicle. If latency constraints must be relaxed, an analysis will be needed of the effects of safety- critical messages exceeding their latency bounds. Such efforts are beyond the scope of this report and are left to future studies.

7.2 SUMMARY EVALUATIONS

1. As can be seen from the above results, the ability of existing automotive protocol standards to support IVHS systems varies widely depending on the anticipated implementation time frame and type of functions performed by the system.

2. A somewhat surprising conclusion of this study is the limited ability of existing protocols to support real-time control (as defined in this report). A fairly cautious, but realistic, approach was taken to defining network latency and data buffering constraints for real-time control. Except for AC-l and AC-2, the high speed (1 Mbps) CSMA/NDA protocols were able to satisfy these constraints for the near-term architectures. The AC-l and AC-2 systems could not be reliably supported by any of the candidate protocols. None of the lower speed protocols could reliably support systems having real-time traffic.

3. Most of the candidate high speed protocols would be acceptable in the near- and mid-term, if the definition of real-time control was relaxed. For example, if latency and buffering delay was relaxed to 7 msec, at a certainty of 1 in 10^9, all of the proposed near-term and mid-term systems could be supported by at least one existing protocol. However, this may present unacceptable risks to vehicle reliability and safety.

4. Some caution should be used in interpreting the results presented herein. Until the actual systems can be simulated, the values obtained for network latency performance must be extrapolated from other published studies. Given the probabilistic nature of network behavior, this approach may yield inaccuracies under some conditions.

7.2.1 Near Term

1. In the near term, most of the proposed IVHS safety systems could be supported by one or more existing protocols. Except for AC-1 and AC-2, all of the standalone and integrated near-term systems having real-time functions could be supported by 1 Mbps CSMA/NDA protocols. Four systems (SA-3, CR-2, DC- 1, and the integrated ACN/CDR) had no real-time functions; two of these

(SA-3 and CR-2) could be supported with CSMA/NDA protocols operating at 41.6 kbps (e.g., SAE J1850). CR-2 and the integrated ACNKDR would require a 100 kbps or higher standard such as Advanced PALMNRT, DDB, or VAN.

2. For buses that operate below 41.6 kbps, the combination of message buffering delays and network latency are too long for anything other than low data rate, higher latency applications. Only SA-3 fell into this category. For example, a CSMA/NDA bus operating at 20 kbps, loaded at 50%, would have buffer delays on the order of 6.2 msec, an average network latency in excess of 200 msec, and a.data throughput of 2500 bps. This is acceptable for many status and diagnostic functions, and Class A sensing and switching.

3. For real-time control, where end-to-end system delays must be approximately 4 msec, only lightly loaded, high speed (1 Mbps) CSMA/NDA networks are suitable. A 1 Mbps bus at 25% loading could support approximately 25 kbps of real-time message traftic (1 msec of combined buffer delay and network latency). Using a 64-bit CAN message with 48 bits of overhead, this gives a real-time throughput of 6250 bps of application layer data, not counting the 1 l-bit message type field. If the message type field is used by the application layer, then throughput rises to 10,547 bps.

7.2.2 Mid Term

1. In the mid-term fully integrated IVHS system, traffic volumes are large enough to eliminate from consideration any protocols that operate below approximately 250 kbps, assuming the network utilization is restricted to 50%. Assuming as above that the 1 Mbps CSMA/NDA systems carrying real-time traffic are limited to 25% loading and can carry approximately 25 kbps of real-time traffic, the mid-term fully integrated IVHS system could not be supported by any of the existing protocols.

2. If the combined latency and buffer delay constraint is relaxed to approximately 9 msec, then the existing 1 Mbps CSMA/NDA standards are adequate up to a network loading of approximately 50%. Several standards could then support the integrated IVHS system, including CAN, Furukawa Advanced PALMNET, DDB, and VAN. Operating at 50% load, these networks could support approximately 250 kbps of “near-real-time” data (end-to-end system processing delay of 12 msec) and 250 kbps of non-time critical data. However, this may be unacceptable for some vehicle functions from a reliability and safety viewpoint. Further study using computer simulations would be needed.

3. High speed token passing and polling protocols may be suitable for the mid-term system, but this could not be ascertained within the scope of this study. Preliminary results show that the GM token network, when restricted to one address per node, does not give the required real-time latencies. However, if high priority nodes were assigned multiple addresses, the average and maximum delays between token possessions would decrease, which could significantly improve latency performance. Similar arguments apply to the polling protocol (AUTOLAN).

7.2.3 Far Term

1. In the far-term, a highly integrated, high performance, high speed network standard will be required. Traffic loads of approximately 500 kbps or more can be expected, and much of this may be real-time data (see SAE 940133, for example). Combining this traffic onto a single CSMA/NDA network may not be feasible, since CSMA/NDA is effectively limited to approximately 1 Mbps.

The resulting 50% or higher network load will not yield acceptable latency performance except for the few highest priority messages.

2. None of the protocols considered in this study can support a data throughput rate of 500 kbps and guaranteed latencies of 1 msec to all high priority messages, unless the high priority traffic only accounts for a few per cent of the overall traffic. This is in fact the opposite of what has been found in this study: real-time traffic tends to dominate most networks, because real-time control actions must be updated at rates that are generally much faster than the response times of the human nervous system. Non-real-time data tends to be much lower in volume because it is dominated by status and diagnostic information, which changes relatively slowly in most systems.

3. The AUTOLAN polling protocol operates at 4 Mbps, but its latency and throughput performance is not known. Polling frames are functionally similar to token passing, thus the performance of AUTOLAN should be similar to the token passing standards. These protocols have well bounded latencies, but even with Light traffic loads, the highest priority messages may experience several msec of delay. This is probably not acceptable for most real-time control applications.

4. An option is to operate the IVHS functions on a lower speed subnetwork, with a router or "firewall" separating the IVHS subnet from the existing in-vehicle network. Such devices do not yet exist, thus it is not clear whether they could meet the needed timing and reliability constraints.

7.3 SUMMARY OF STUDY RESULTS

This section contains a concise summary of the study findings.

7.3.1 General Observations

Existing automotive protocols can be characterized as follows:

1. Oriented toward conveying sampled sensor data and actuator commands over physically and electrically short distances.

2. Not well-suited to file-oriented data, or digitized speech, video, and graphics.

3. Suitable for "near-real-time" control, diagnostics, and short status' reports.

4. Only 1 Mbps CSMA/NDA protocols appear to meet the latency and throughput requirements for safety-critical, real-time control; approximately 25 kbps of real-tune message traffic can be supported.

5. Performance of token passing and polling protocols in specific systems has not been quantified.

6. Most automotive protocols have adequate error detection capabilities.

7. Many do not adequately address fault tolerance issues.

8. "Plug and play" is not yet feasible: physical layers are not fully specified, message types and addresses are tied to the arbitration scheme, application layer data is not standardized.

9. Long term network performance against specific system designs needs to be better quantified.

7.3.2 Near-Term Applications (0 to 5 Years)

The following observations apply to the proposed near-term IVHS safety systems:

1. Most of the proposed IVHS systems are dominated by real-time message traffic; an assumed 4 msec timing budget for real-time control eliminates all except high speed (250 kbps and above) protocols from consideration.

2. 1 Mbps CSMA/NDA protocols can support all proposed near-term IVHS systems except AC-l and AC-2.

3. No existing CSMA/NDA protocols could adequately support AC-l and AC-2 systems using the assumed real-time end-to-end timing budgets; token passing and polling protocols are possibilities, but their performance could not be quantified within the scope of this study.

4. Below 1 Mbps, existing protocols can only guarantee latency and throughput for status and diagnostic systems, or lightly loaded "near-real-time" systems (e.g., SA-3, CR-2, DC- I, integrated ACN/CDR); buffer delays begin to dominate.

5. Low speed protocols (below 20 kbps) are suitable for status and diagnostic systems, or Class A sensing and switching functions.

6. Few available studies address long term latency bound issues or failure modes and effects.

7.3.3 Mid-Term Applications (5 to 10 Years)

The following observations apply to the proposed mid-term integrated IVHS safety system:

1. The proposed mid-term, fully integrated IVHS system could not be supported by the existing CSMA/NDA protocols because of high levels of real-time message traffic.

2. CSMA/NDA is effectively limited to 1 Mbps by arbitration timing constraints.

3. Token passing or polling protocol may be suitable for mid-term system; difficult to assess without simulation.

4. Mid-term system could be supported if latency constraints were relaxed: failure modes and effects are unknown and could be a vehicle safety risk.

7.3.4 Far-Term Applications (10 Years and Beyond)

The following observations apply to the potential far-term integration of multiple IVHS safety systems with existing in-vehicle networks:

1. Existing protocol standards do not appear adequate to support a future high capacity, real- time, highly integrated in-vehicle network.

2. 1 msec "real-time" network latency is difficult to achieve at a 10^{12} assurance level; 1 Mbps CSMA/NDA limited to approximately 25 kbps of "real-time" traffic with these constraints

3. Future networks may require real-time subnets, connected by a "near-real-time" backbone, hardware-based routing, higher clock speed.

4. Feasibility of a high speed, low latency network standard needs study.

5. Fault tolerance (both in network and in the attached nodes) and failure modes and effects will be major concerns in a highly integrated system; may require "firewall" concepts.

APPENDIX A: ANNOTATED BIBLIOGRAPHY

Listed below are the information sources defined in Subtask 1 of this task.

Electronic Interface Standards and Computer Systems

Bosch

Controller Area Network (CAN) Specification, Version 2.0

Chrysler

Chrysler Collision Detection (C^2D) Bus
Chrysler Sensor and Control (CSC) Bus

Electronic Industries Association

RS-232
RS-422
RS-423
RS-485

Ford

Hosted Bus Controller Circuit (HBCC)
Audio Control Protocol (ACP)

General Instruments

Auto Local Area Network (AutoLAN)

General Motors/Delco

GM Class 2 Serial Data Bus XDE-3100
Delco DCLS/P

Germany/Europe

Peugot's Vehicle Area Network (VA)
Volkswagen's Automotive Bit-Serial Universal Interface System (ABUS)
R. Bosch GmbH, Controller Area Network (CAN) Specification, Version 2.0

IEEE

IEEE 802.3 (Ethernet)
IEEE 802.4 (Token Bus/Mini-Manufacturing Automation Protocol)
IEEE 802.5 (Token Ring)

International Standards Organization (ISO)

ISO 4092: Road Vehicles: Diagnostic Systems for Motor Vehicles; Vocabulary
ISO 7498: Open Systems Interconnection: Basic Reference Model
ISO 9141: Road Vehicles: Diagnostic Systems; CARB Requirements for Interchange of Digital Information
ISO 11519: Serial Data Communication for Automotive Application, Part 1: Controller Area Network

ISO 11898: Road Vehicles: Interchange of Digital Information; Controller Area Network (CAN) for High Speed Communication
ISO TC22/SC3/WGl: Vehicle Area Network: VAN Specification, Version 1.2
ISO X.25: High-Level Data Link Control (HDLC)

Japan
Mazda's PALMNET

Philips
Digital Data Bus (DDB)

Society of Automotive Engineers SAE)
Note: All electronics-related SAE standards are contained in vol. 2 of the SAE Handbook.
Buses, Multiplexing, Communication Protocols
J1213/1 : Glossary of Vehicle Networks for Multiplexing and Data Communications
J1213/2: Glossary of Reliability Terminology Associated with Automotive Electronics
J1567: Collision Detection Serial Data Communication Multiplex Bus
J1583: Controller Area Network: An In-Vehicle Serial Communication Protocol
J1587: Joint SAE/T'MC Electronic Data Interchange Between Minicomputer Systems in Heavy Duty Vehicle Applications
J1699: J1850 Verification Test Procedures
J1708: Serial Data Communications Between Microcomputer Systems in Heavy Duty Vehicle Applications
J1813: A Vehicle Network Protocol with a Fault Tolerant Multiplex Signal bus
J1850: Class B Data Communication Network Interface
J1922: Powertrain Control Interface for Electronic Controls Used in Medium Duty and Heavy Duty Diesel On-Highway Vehicle Applications
J1938: Design/Process Checklist for Vehicle Electronic Systems
J1939: Recommended Practice for Serial Control and Communications Network (Class C) for Truck and Bus Applications
J1939/l : Truck and Bus Control and Communications Network
J1939/2: CAN 29-Bit Identifier Data Link Layer
J1939/8: Network Management
J1939/l1: 250k Baud Twisted Shielded Pair Physical Layer
J1939/31: Truck and Bus Network Layer
J1939/71: Truck, Bus, Agricultural, and Construction Equipment Application Layer
J2056/l: Class C Application Requirements Considerations
J2056/2: Survey of Known Protocols
J2056/3: Selection of Transmission Media
J2057/1: Class A Application/Definition
J2057/4: Class A Multiplexing Architecture Strategies
J2058: Chrysler Sensor and Control (CSC) Bus Multiplexing Network for Class A Applications
J2106: Token Slot Network for Automotive Control
J2178/1: Class B Data Communication Network Messages: Detailed Header Formats and Physical Address Assignments
J2178/Z Class B Data Communication Network Messages Part 2: Data Parameter Definitions
J2186: Electrical/Electronic Data Link Security
Sensors
J1377: Transmission Mounted Vehicle Speed Signal Rotor Specification

J1843: Accelerator Pedal Position Sensor for Use with Electronic Controls in Medium and Heavy Duty Vehicle Applications

J2057/3: Class A Multiplexing Sensors

Body Electronics

J771: Automotive Printed Circuits

J1292: Automobile, Truck, Truck-Tractor, Trailer, and Motor Coach Wiring

J1879: General Qualification and Production Acceptance Criteria for Integrated Circuits in Automotive Applications

Anti-lock Brakes

J2246: Antilock Brake System Review

Electronic Control Systems

J1922: Powertrain Control Interface for Electronic Controls Used in Medium and Heavy Duty Diesel On-Highway Vehicle Applications

Testing and Diagnostics

J1930: Electrical/Electronic (E/E) Systems Diagnostic Terms, Definitions, Abbreviations, and Acronyms

J1962: Diagnostic Connector

J1978: OBD II Scan Tool

J1979: E/E Diagnostic Test Modes

J2012: Recommended Format and Messages for Diagnostic Trouble Codes

J2037: Off-Board Diagnostic (OBD) Message Formats

J2054: E/E Diagnostic Data Communications

J2062: Class B Serial Bus Diagnostic Protocol

J2086: An Applied Layer Protocol for a Generic Scan Tool

J2190: Enhanced E/E Diagnostic Test Modes

J2201: Universal Interface for OBD II Scan

J2205: Expanded Diagnostic Protocol for OBD II Scan Tool (Draft)

Joint Integrated Avionics Working Group (JIAWG)

J88-M5 Standard JIAWG Linear Token Passing Multiplex Data Bus Protocol

U.S. Military

MIL-STD-1553B: Aircraft Internal Time Division Command/Response Multiplex Data Bus

Pertinent Organizations and Special Committees

American National Standards Institute (ANSI): Detailed physical level standards covering a broad range of topics; often oriented toward physical specifications such as size, strength, composition, environmental factors, etc.

American Society of ***Civil Engineers (ASCE):*** Does not have committees specifically dedicated to automotive technology, but does publish technical papers that address automobile related topics.

American Society of Highway Engineers (ASHE): Primarily oriented toward highway design and construction, becoming involved in IVHS as a advocate of safer, more efficient highways.

American Society of Mechanical Engineers (ASME): Writes comprehensive standards relating to mechanical, hydraulic, pneumatic, and electromechanical systems and components, physical and functional specifications. Automotive topics are addressed by several committees (e.g., Applied Mechanics), although there are no committees dedicated to automotive topics.

Association of Public Transit Administrators (APTA): Becoming involved in IVNS as an advocate of smarter, more efficient mess transit systems.

Deutsches Industrie Norm (DIN): German industrial standards, similar in scope to ANSI

Electronics Industries Association: U.S. standards for electronics manufacturing, geared toward commercial electronics and physical layer of IS0 reference model

Institute of Electrical and Electronic Engineers (IEEE): Writes comprehensive standards for electronics systems and components; addresses all layers of IS0 model.

Standards Coordinating Committee for IVHS
Vehicular Technology Society: consults with SAE in definition of standards.
  Subcommittee on Vehicular Radar for CA
Control Systems Society
Aerospace and Electronic Systems Society
Microwave Theory and Techniques Society

International Standards Organization (ISO): Writes standards covering a broad range of topics, more oriented toward system functionality than physical layer characteristics; includes inputs from international community. Coordinates extensively with other standards bodies.

Transportation Committee

ITS America

IVHS System Architectures
Standards and Protocols Committee
Safety and Human Factors Committee
System Architecture
APT'S Committee
ARTS Committee
ATIS Committee
ATMS Committee
AVCS Committee
CVO Committee
Communications Committee

Society of Automotive Engineers (SAE) (412)-776-4841

Circuit Protection and Switching Devices Standards Technical Committee
Electrical Distribution Systems Standards Committee
Electrical and Electronic Systems Technical Committee
Electromagnetic Radiation Standards Committee
EM1 Standards and Test Methods Committee
Ignition Systems Standards Committee
Truck and Bus Electrical and Electronics Committee
  Truck and Bus Control and Communications Network Subcommittee
  Truck and Bus Data Format Diagnostics Subcommittee
  Truck and Bus Vehicle Electronic Components Programming Subcommittee
  Truck and Bus Diesel Engine Electronic Controls Subcommittee
Vehicle Network for Multiplexing and Data Communications Standards Committee
Vehicle ElectricaI/Electronic Systems Diagnostic Standards Committee

Bibliography

Publications by Private Industry (Product Specifications, and Application Notes)

R. Bosch GmbH, "CAN Bus Bit Timing and Permitted Propagation Times," Report K5/ESY/91/A21
Ford Motor Co, "Hosted Bus Controller Chip (HBCC) User's Guide, version 1.5," 1989
Harris Semiconductor, "XJ1 850 Preliminary Data"
Intel, 82527 Serial Communications Controller Architecture Overview
Intel, 82527 Serial Communications Controller CAN Protocol
Intel 87C196CA Advanced 16-bit CHMOS Microcontroller with Integrated CAN 2.0
Motorola, "The MI Bus and Product Family for Multiplexing Systems" (EB409)
Motorola, "MC68HC05Pl Technical Data"
Motorola, "MC68HCll Reference Manual"
Motorola, "MC68HC705V8 Specification"
Motorola, "MC68HC708XL36 Technical Summary"
Motorola, "Using the MC68332 TPU to Implement the 51850 Protocol" (SAE 940137)
Phillips Semiconductors, "Serial Lii I/O CAN Data Sheet"
Phillips, "Bit Timing Parameters for CAN Networks," App. Note KIE 07/91 ME
National Semiconductor, "DS36001 SLI0l: Serial I/O Device"
Toyota, "A Multiplexing Communication IC for Automotive Body Electronic Control" (SAE 940364)

Handbooks of Industry Standards and Practices

1994 SAE Handbook, vol. 2 (contains all J-series reports for automotive electronics standards)
Automotive Handbook, 3rd Ed., 1993, R. Bosch GmbH (weighted toward German/European industry; addresses all aspects of automotive design)

Selected Conference Proceedings

Proceedings of the 1994 International Congress on Transportation Electronics, SAE/IEEE Dearborn
Proceedings of the 1988 International Congress on Transportation Electronics, SAE/IEEE, Dearborn
Proceedings of the Fourth IVHS America Annual Meeting, Atlanta, GA, 1994
Proceedings of the Third IVHS America Annual Meeting, Washington, DC, 1993
Proceedings of the Vigilance and Transport Conference, Lyon, France, 1993
Proceedings of the 18th Int'l. Symposium on Automotive Technology and Automation, Italy, 1988
Proceedings of the Intelligent Vehicles Symposium, Tokyo, 1993
Proceedings of the Intelligent Vehicles Symposium, Detroit, 1992
Proceedings of the 12th Int'l. Conf. on Experimental Safety Vehicles, Sweden, 1989
Proceedings of the 13th Int'l. Conf. on Experimental Safety Vehicles, Paris, 1993
Transportation Research Board Annual Meetings

Technical Textbooks and Tutorials

Understanding Automotive Electronics, W.B. Ribbens, 1993, SAMS Publishing
Car Electronics, S. Mizutani, 1993, Sankaido Co.
Automotive Computers and Control Systems, T. Weathers and C. Hunter, 1984, Prentice-Hall
The Automotive Computer, D. Knowles, 1987, Prentice-Hall
Automotive Chassis and Accessory Circuits, M. Brejcha and C. Samuels, 1987, Prentice-Hall
Smart Highways, Smart Cars, R. Whelan, 1995 (publication pending), Artech House
Advanced Technology for Road Transport I. Catling (ed.), 1994, Artech House
Understanding Automotive Sensors and Actuators, 1987, SAMS Publishing
Driving Future Vehicles, A. Parkes & S. Franzen, eds., Taylor & Francis Publishing, 1993

General Interest Perlodlcals

"Automotive Industries," Chilton Co., Radnor, Pa (monthly)
"Ward's Auto World," Intertec Publishing, Overland Park, Kansas (monthly)
"Automotive Engineering," SAE International, Warrendale, Pa. (monthly)
"Automotive News," Grain Communications, Detroit, MI (weekly)

Selected Technical Papers

Multiplexing and Networking

Multiplexing and Fiber-optics (1994, SAE SP-1012; 28 recent papers)
Multiplex Technology Applications in Vehicle Electrical Systems (1993, SAE SP-954; 16 recent papers)
Multiplex Technology Applications to Vehicle Wiring Harnesses (1992, SAE SP-899; 13 recent papers)
Vehicle Multiplexing Systems (1991, SAE P-241, 18 recent papers)
Advances in Multiplexing in Automobiles (1990, SAE SP-806; 11 recent papers)
"A Distributed Control System for Automotive Applications," J.H. Evans, Autotech, 1993
"Passive Star Based Optical Network for Automotive Applications," SPIE Proceedings, 1989
"Development of Multiplex Wiring System with Optical Data Link for Automobiles" (SAE 840492/Toyota)
"Chrysler Collision Detection (C^2D): A Revolutionary Vehicle Network" (SAE 860389Chrysler)
"In-Vehicle Networking: Serial Communication Requirements and Directions" (SAE 860390)
"Automotive Serial Controller Area Network" (SAE 860391)
"Development of a Practical Multiplexing Wiring System" (SAE 880589)
"Protocol for PALMNET: A Newly Developed In-Vehicle Communication System Based on SAE J1850" (SAE 890535/Mazda)
"Data Link Overview for Heavy Duty Vehicle Applications" (SAE 902215)
"Fiber-Optic Data Link for Vehicle Navigation" (SAE 900626)
"High-Reliability Physical Layer for In-Vehicle High Speed LAN" (SAE 910464)
"The High Speed In-Vehicle Network of Integrated Control Systems for Vehicle Dynamics" (SAE 910463)
"Evaluation Method of the Automotive Distributed Control Multiplex System" (SAE 910716)
"An Evaluation of Latency Time by Simulation for Distributed Multiplex System" (SAE 910717)
"Vehicle Area Network" (SAE 920223/Peugot)
"Multiplex Systems in the BMW 85Oi" (SAE 920225/BMW)
"Development of an On-Board Class A LAN" (SAE 920229/Nissan)
"A Low-Speed In-Vehicle Network for Body Electronics" (SAE 920231/Nippondenso)
"Class C Communications Protocol Proposal for Off-Road Vehicles" (SAE 930007)
"Passive Star Type Optical Communication Network for Vehicles" (SAE 930439)
"Application of 51939 Networks in Agricultural Equipment" (SAE 931530)
"Utilization of CAN Technology in a Distributed Control System" (SAE 931535)
"Cost vs. Performance: Hardware/Software Tradeoff Considerations in Multiplex Device System Design" (SAE 93 1806)
"J1939 High Speed Serial Communications, the Next Generation Network for Heavy Duty Vehicles" (SAE 93 1809)
"Engine Electronics Technology" (SAE 932404)
"Data Reduction in Automotive Multiplex Systems" (SAE 940135)
"ACP: Ford's Audio Control Protocol" (SAE 940142/Ford)
"CAN Physical Layer for Off-Road Equipment" (SAE 941078)
"Rethinking Multiplex" (SAE 941650)
"Physical Media Issues for High Speed Vehicle Networks" (SAE 941656)

"Robust Adaptive Data Compression for Peak Load Reduction in Low-Speed Automotive Multiplex Systems" (SAE 941658)
"A Serial Link Input/Output CAN Implementation" (SAE 941661)
'High Speed Networking in Construction and Agricultural Equipment" (SAE 941662)
"Introduction to SAE J2178: Driving J1850 *Networks," Automotive Engineering,* Sept. 1992
"Class: Introduction to Medium-Speed Multiplexing," *Automotive Engineering,* Sept. 1992
"Improving the Reliability and Safety of Automotive Electronics," E. Zanoni and P. Pavan *IEEE Micro,* Feb. 1993
"Electronic System Architecture," *Automotive Engineering,* April 1993
"Automotive Electronics and MCMs," *Automotive Engineering,* April 1993
"Why So Slow?" J. Rivard, *Automotive Industries,* Feb. 1994
"Are MCMs the Answer?" *Automotive Engineering,* April 1994

Advanced Vehicle Control Technology

Electronic Engine Controls (1994, SAE SP-1029; 20 recent papers)
Electronic Engine Controls (1993, SAE SP-955; 8 recent papers)
ABS/TCS and Brake Technology Developments (1994, SAE SP-1018; 15 recent papers)
ABS/Traction Control and Advanced Brake Systems (1992, SAE SP-914, 12 recent papers)
"M-IS/Vehicle Control Enhancement Technologies," W. Najm, Mini-symposium on IVHS, 1993
"An Optimized Approach to Suspension Control," (SAE 900661)

Sensors and Actuators

Sensors and Actuators 1994 (SAE SP-1013; 12 recent papers)
Sensors and Actuators 1993 (SAE SP-948; 13 recent papers)
Sensors and Actuators 1992 (SAE SP-903; 21 recent papers)
"A Multiplexed Automotive Sensor System," T. Wrobleski, *Sensors* magazine, Feb. 1989
"A CSC Bus Multiplexing Technique for Sensors and Actuators Which Allows Common Vehicle Electronic Control Modules," T. Wrobleski, paper 89123, 20th Int'l. Symp. on Automot. Technology and Automation, May, 1989

IVHS Documents

General Tutorials and Overviews

ZVHS Advancements (1994, SAE SP-1037; 9 recent papers)
IVHS Issues and Technology (1992, SAE SP-928, 6 recent papers)
A Comparison of IVHS Progress in the United States, Japan, and Europe, ITS America, 1993
"National Intelligent Vehicle Highway System Program Plan," DOT HS 807-850, U.S. Dept. of Transportation, National Highway Traffic Safety Administration, Aug. 1992
Guidelines of ATMS, ITS America, 1993
IVHS Safety and Human Factors Considerations, ITS America, 1993
Strategic Plan for Intelligent Vehicle Highway Systems in the United States, ITS America, 1993
"Methodologies for Evaluating the Impact on Safety of Intelligent Highway Vehicle Systems," A. Burgett, US-DOT, NHTSA, paper #94 S3-0-12
"United States Dept. of Transportation Federal Highway Admin. Request for Applications to establish National Automated Highway System," #DTFH6l-94-X-00001, Dec. 1993

Crash Avoidance and Notification

"Collision Avoidance System Cost-Benefit Analysis," DOT HS-806-242, Sept. 198 1
"NHTSA's IVHS Collision Avoidance Research Program: Strategic Plan and Status Update," W. Leasure and A. Burgett, NHTSA paper # 94-S3-0-01, 1994

"A Review of IVHS Crash Avoidance Technologies," W. Najm, Workshop on Collision Avoidance Systems, 1994
"Technology Alternatives for an Automated Collision Notification System (Interim Report)," R. Yuan et. al., Johns Hopkins University, 1994
"SMART Program Plan," U.S. DOT- NHTSA, Office of Crash Avoidance Research, 1994
"System Considerations for the Design of Radar Braking Sensors," R. Chandler and L. Wood, *IEEE Trans. Vehic. Tech.*, Vol. VT-26 #2, May 1977
"Field Evaluation of the RCS Radar Anti-collision Warning System," A. Stem et. al., DOT HS-807-984, 1992
"Evaluation of the VRSS Rashid Radar Safety Brake Collision Warning System,"
"Advanced Safety Vehicle: Advancing Toward the Twenty First Century," Japanese Ministry of Transport, Road Transport Bureau, Study Group for Promotion of Advanced Safety Vehicle
"Intelligent Vehicle Highway Systems/Crash Avoidance Technologies," W. Najm et. al., US-DOT NHTSA/OCAR, July 1992
"Millimeter-Wave Radars for Automotive Use," T. Takehana et. al., Int'l. Cong. Transport. Elect., Dearborn, 1988
"Anti-Collision Radar State of the Art," M. Alvisi et. al., DRIVE Conf., Vol. 2, 1991
"The Anti-Collision Radar in the DRIVE-SMILER Project," P. DeLoof et. al., 13th Int'l. Tech. Conf. on Experimental Safety Vehicles, Vol. 1, DOT HS 807-990, Paris, July 1993
"Radar for Hazard Warning," D. Daniels, 18th Int'l. Symp. Automat. Technology and Automation, Italy, 1988
"Utilization of an Automotive Radar for Collision Avoidance," H. Goldman, Int'l. Conf. New Ways and Means for Improved Safety, Israel, 1989
"Automotive Anti-Collision Radar," *Y.* Takimoto and M. *Kotaki, Applied Microwaves,* Fall 1992
"80 GHz Radar for Cars," A. Stove, FISITA 92
"Low-Cost Design of a Quasi-Optical Front End for On-Board mm-Wave Pulsed Radar," *N.* Haese et. *al., IEEE MTT-S Digest,* June 1992
"System Aspects and Design of an Automotive Collision Warning PN Code Radar Using Wavefront Reconstruction," J. Detlefsen et. al., *IEEE MTT-S Digest,* June 1992
"A Review of VORAD Vehicle Detection and Driver Alert System" (SAE 922495)
"Adapting Radar to the Automotive Environment," J. Davis, *Experimental Safety Vehicles,* 1988
"Application of Radar for Automotive Crash Avoidance," C. Lichtenberg, SAE Int'l. Cong. Expos., Detroit 1987
"An Automotive Collision Avoidance and Obstacle Detection Radar," M. Seiler, Battelle Mem. Inst., 1990
Cradar - An Open Loop Extended Monopulse' Automotive Radar," *IEEE Trans. Vehic. Tech.,* Aug. 1989
"Collision Avoidance Radar Braking Systems Investigation, Phase III Study" W. Faris et. al, DOT HS 805-049, 1979
"Harmonic Radar Helps Autos Avoid Collisions," J. Shefer and R. Klensch, *IEEE Spectrum,* May 1973
"Effect of a Headway Display on Driver Following Behavior: Experimental Field Test Design and Initial Results," D. McGehee et. al., Intelligent Vehicles Symposium, Tokyo, 1993
"Field Evaluation of a Nissan Laser Collision Avoidance System," A. Stem et. al., DOT HS807-417, Jan. 1989
"Distance Warning and Control as a Means of Increasing Road Safety and Ease of Operation," J. Maretzke and U. Jacob, FISITA 92
"Laser Radar Collision Warning Systems," J. Teideke, SAE TOPTEC, Washington DC, April 1993
"Design Method for an Automotive Laser Radar System and Future Prospects for Laser Radar," M. Sekine et. al., Intelligent Vehicles 92, Detroit, June 1992

"The Development of Advanced Vehicle Technologies for Autonomous Driving," A. Hosaka and M. Taniguchi TRB 71st Annual Meeting, Washington DC, Jan. 1992
"The First Practical Application of a Laser Radar Rear End Collision Warning System in Production Heavy-Duty Trucks," I. Muramoto et. al., 13th Int'l. Tech. Conf. on Experimental Safety Vehicles, DOT HS 807-990, July 1993
"A Collision Avoidance Radar System Using Laser Radar" (SAE 881859)
"Development of a Laser Radar System for Automobiles," T. Yanagisawa et. al., SAE Int'l. Cong. and Expos., Detroit, 1992
"Study of Laser Radar," T. Teramoto et. al., 12th Int'l. Conf. on Experimental Safety Vehicles, Sweden, 1989
"Autonomous Intelligent Cruise Control Incorporating Automatic Braking," P. Martin, SAE Int'l. Cong. and Expos., Detroit 1993
"Intelligent Cruise Control with Fuzzy Logic," R. Muller and G. Nocker, Intelligent Vehicles 92 Symp., Detroit, 1992
"Intelligent Cruise Control and Roadside Information," U. Palmquist, *IEEE Micro*, Feb. 1993
"Intelligent Cruise Control: A Key Element Towards Improved Traffic Flow Control," U. Palmquist, Intelligent Vehicles Symp., Tokyo 1993
"Autonomous Intelligent *Cruise* Control," P. *Ioannou* and *C.* Chien, *IEEE Trans. Vehic. Tech.*, Nov. 1993
"Radar Control for Automotive Collision Mitigation and Headway Spacing," E. Belohoubek, *IEEE Trans. Vehic. Tech.*, May 1982
"Smart Cruise: A Deployment Issue," J. Haugen, *Automotive Industries*, May 1993
"Integration Between Anti-Collision and AICC Functions: The ALERT Project," P. Carrea and A. Saroldi, Intelligent Vehicles Syrnp., Tokyo 1993
"The Application of Acoustic Ranging to the Automatic Control of a Ground Vehicle," G. Clernence and G. Hurlbut, *IEEE Trans. Vehic. Tech.*, Aug. 1983
"An Ultrasonic Proximity System for Automobile Collision Avoidance" (SAE 920393)
"Microwave Sensors for Near Obstacle Detection," M. Tuckman, SAE TOPTEC, Washington DC, 1993
Miniature Microwave Range and Velocity Selective Sensor System for Vehicle/Object Detection," P. Katzin et. al., DOT Contr. # DTRS-57-89-C-00144, 1990
"A Two-Frequency Radar for Vehicle Automatic Lateral Control," R. Mayhan and R. Bishel, *IEEE Trans. Vehic. Tech.*, Feb. 1982
"A Full Scale Experimental Study of a Vehicle Lateral Control System," W. Zhang et. al., TRB 71st Annual Meeting, Washington DC, 1992
"Automatic Vehicle Control Developments in the PATH Program," S. Schladover et. al., *IEEE Trans. Vehic. Tech.*, Feb. 1991
"An Intelligent Roadway Reference System for Vehicle Lateral Guidance/Control," W. Zhang et. al., Proc. Am. Cont. Conf., San Diego, 1990
"Experimental Studies of Vehicle Lateral Control by Detection of Reflective Markers," M. Nakamura et. al., IVHS America Annual Meeting, 1993
"An Advanced Laser-Based Tracking Device for Motor Vehicle Lane Position Monitoring and Steering Assistance," W. Bachalo et. al., USDOT SBIR Contr. # DTRS-57-91-C-00111, 1992
"Computer Architecture and Implementation of Vision Based Real Time Lane Sensing," 0. Altan et. al., Intelligent Vehicles 92 Symp., Detroit, 1992
"Driving Environment Recognition for Active Safety," T. Suzuki et. al., Toyota Technical Review, Vol. 43, #l, Sept. 1993
"VITA: An Autonomous Road Vehicle (ARV) for Collision Avoidance in Traffic," B. Ullmer, Intelligent Vehicles 92 Symp., Detroit, 1992
"Lane Recognition for Guiding of Autonomous Vehicle," A. Suzuki et. al., Intelligent Vehicles 92 Symp., Detroit, 1992

"Collision Avoidance," *C.* Sawyer, *Automotive Industries,* Jan. 1993
"Overview of Collision Warning," R. Tribe, SAE TOPTEC, Washington DC, April 1993
"Vehicle Lateral Guidance Using a DSP Based Vision System," M. Heller et. al., ASCE Applications of Advanced Technologies in Transportation Engineering, 1991
"A High Performance Low Light Level TV for Camera for Nighttime Pilotage," G. Williams, SPIE, Vol. 1655, 1992
"Description of Three PROMETHEUS Demonstrators Having Potential Safety Effects," D. Augello, Proc. 13th Int'l. Tech. Conf. on Exper. Safety Vehic., Paris, 1993; DOT HS 807-990
"Active Safety Research on Intelligent Driver Support Systems," S. Franzen and B. Ilhage, Proc. 12th Int'l. Tech. Conf. on Exper. Safety Vehic., Sweden, 1989
"Safer Nighttime Driving: UV Headlamps Improve Visibility of Pedestrians," P. Fast and A. Ricksand, TRB 73rd Annual Meeting, Washington DC, 1994
"Invisible Headlights Double Low Beam Range," D. Scott, Automotive Engineer, Feb./Mar. 1993
"Road Signpost Recognition System," H. Akatsuka and S. Imai, Vehicle Highway Infrastructure Safety Compatibility (SAE 870239). 1987
"Real-Time Vision Based Intersection Detection for a Driver's Warning Assistant," S. Rossle et. al., Intelligent Vehicles Symp., Tokyo, 1993
"Realization of a Driver's Warning Assistant for Intersections," W. Enkelmann et. al., Intelligent Vehicles 93 Symp., Tokyo, 1993
"Towards a System Architecture of a Driver's Warning Assistant," G. Geiser and G. Nirschi, Ch. 24 of Driving Future Vehicles, A. Parkes and S. Franzen eds., Taylor & Francis, 1993
"Interactive Road Signaling: ISIS," L. De Vaulx, 13th Int'l. Tech. Conf. on Exper. Safety Vehic., Paris, 1993; DOT HS 807-990
"Super Smart Vehicle System: AVCS Related Systems for the Future," S. Tsugawa et. al., Intelligent Vehicles 92 Symp., Detroit, 1992
"Applications of Microwaves and Millimeter Waves for Vehicle Communications and Control in Europe," H. Meinel, 1992 Int'l. Microwave Symp., *IEEE MTT-S Digest,* June 1992
"European Concepts for Vehicle Safety, Communications, and Guidance," P. Walzer and W. Zimdahl, Int'l. Cong. on Transportation Electronics, Dearborn, 1988

Industry Contacts

Electronics Components

Analog Devices
Delco Electronics
Harris Semiconductor
Intel
Motorola Semiconductor Products
NCR Microelectronic Products
NEC Electronics
Phillips Semiconductors
SGS-Thomson Microelectronics
Temic Semiconductors (Consortium of Dialog/MATRA/Siliconix/Telefinken)
Texas Instruments
Toshiba America Electronic Components/Automotive Device Div.
Unitrode Integrated Circuits

Electronic Systems

Delco Electronics
Eaton Automotive and Appliance Controls Div.

Epic Technologies
L. Kostal GmbH
Motorola Semiconductors
Motorola Automotive, Energy, and Controls group
Siemens Automotive
Temic Semiconductors (Consortium of Dialog/MATRA/Siliconix/Telefunken)
TRW Automotive Electronics
TRW Transportation Systems
United Technologies Automotive

IVHS Systems

Armatron/Echo Vision (EchoVision ultrasonic vehicle blindspot monitoring system)
Clarion (CCMS vehicle backing monitor)
Computer Sonics Inc. (SONALERT vehicle blindspot monitoring system)
Delco Electronics (Forewarn collision warning systems; TelePath 100 entertainment and navigation system)
Eaton Automotive and Appliance Controls Div., VORAD Technologies VORAD collision warning system
EBI, Inc. (Hindsight 20/20 ultrasonic vehicle blindspot monitor)
General Microwave (Tractor Trailer Lane Change Warning System)
Ichikoh Industries (Safety Vision SV-55 vehicle backing monitor)
KG Rear Vision (REAR VISION video blindspot monitor)
Leica-Heerbrugg AG (MSAR car following distancer)
Magellan Systems Corp. (lo-channel GPS receiver)
Millitech (Automobile Radar Front End)
Motorola Automotive, Energy, and Controls group, IVHS Systems: Advance route guidance and navigation system; Encore GPS receiver)
Rockwell Autonetics Electronic Systems Div. (FleetMaster vehicle location system)
Rockwell Automotive Electronics. (PathMaster route guidance and information system)
Rockwell Highway Transport Electronics (GPS and fleet management systems)
RVI (Indicates relative velocity between host vehicle and nearby vehicles)
Safety First Systems (microwave obstacle detection and warning system)
Safety Technology, Inc. (SafetySensors rear motion detection system)
SCAN/Dynatec (vehicle blindspot monitoring system)
Siemens Automotive: ALI-SCOUT on-board receiver
Sony (RVTV RearVision System vehicle backing monitor, Automotive WatchCam vehicle backing monitor; sold by Fleet Specialties)
Technodyne Research (PROTEX vehicle blindspot monitoring system)
Trend-Tee (Ranger Distance Measuring System - measures/displays distance to obstacles in vehicle blind spots)

Design, Development, and Simulution Tools

Applied Dynamics Int'l. (AD1 SIMsystem, EASYSx, AD RTS simulation and control tools)
Mentor Graphics (graphical design and analysis tools: SDS, AccuSim II, AccuParts, MODPEX, HDL-A, Automotive Library, MATRIX)
MIL3 Inc. 202-364-8390 (OPNET/Jl850 graphical simulation tools)
Nartron Corp.

IVHS System Architecture Concepts

Westinghouse
Rockwell International
Loral
Hughes

OEMs

Chrysler: Engine Engineering Group and Large Vehicle Platforms
Mercedes: Safety Systems
Honda: North American R&D Facility
Ford: Safety and Human Factors

ACRONYMS

ABS	Anti-lock Braking System
ABUS	Automotive Bit serial Universal interface System
AC	Automatic Control
ACC	Autonomous Cruise Control
Ack	Acknowledgement
ACN	Automated Collision Notification
ACP	Audio Control Protocol or Automatic Control Processing
ADC	Analog to Digital Conversion
AD1	Advanced Driver Interface
ANSI	American National Standards Institute
APTS	Advanced Public Transportation Systems
ARTS	Advanced Rail Transportation Systems
ASC	Active Suspension Control
ASIC	Application Specific Integrated Circuit
ATIS	Advanced traveller Information Systems
ATMS	Advanced Traffic Management Systems
AUTOLAN	Automotive Local Area Network
AVCS	Advanced Vehicle Central Systems
AWD	All Wheel Drive
AWS	All-Wheel Steering
BC	Body Controller
CAN	Controller Area Network
CAS	Collision Avoidance System
CCD	Chrysler Collision Detection bus
CCNA	Computer Communications Network Architecture
CD	Carrier Detection
CDR	Collision Data Recorder
CPU	Central Processing Unit
CR	Collision Response
CRC	Cyclic Redundancy Check
CSC	Chrysler Sensor and Control bus
CSMA	Carrier Sense Multiple Access
CVO	Commercial Vehicle Operations
CW	Collision Warning
CWP	Collision Warning Processing
CWS	Collision Warning System
DAC	Digital to Analog Conversion
DC	Direct Current or Data Collection
DDB	Digital Data Bus
DIN	Deutsches Industrie Norm
ECU	Electronic Control Unit
E/E	Electrical/Electronic
EEC	Electronic Engine Controller
EGR	Exhaust Gas Recirculation
EMI	Electromagnetic Interference

EOD	End of Data
EOM	End of Message
ETC	Electronic Transaxle Controller
FCS	Frame Check Sequence
FO	Fiber Optic
fps	feet per second
4WD	Four Wheel Drive
GPS	Global Positioning System
HBCC	Hosted Bus Controller Circuit
HWP	Headway Processing
Hz	Hertz (Cycles per second)
ICC	Intelligent Cruise Control
ICWS	Integrated Collision Waming System
IEEE	Institute of Electrical and Electronics Engineers
IFS	Inter-Frame Separator
ISAS	Integrated Situation Awareness System
ISO	International Standards Organization
IVHS	Intelligent Vehicle Highway Processing
kbps	kilobits per second
LCM	Lane Change and Merge Processing
LPM	Lane Position Monitoring
LSC	Lateral Stability Control
MAC	Media Access Control
Mbps	Megabits per second
MFM	Modified Frequency Modulation
MHz	Megahertz
MICS	Mitsubishi Intelligent Cockpit System
msec	millisecond
Nav	Navigation System
NDA	Non-Destructive Arbitration
NHTSA	National Highway Traffic Safety Administration
NRZ	Non-Return to Zero
NVOM	Normal Vehicle Operations Message
OBD	Off-Board Diagnostics
OEM	Original Equipment Manufacturer
OS1	Open Systems Interconnection
PALMNET	Protocol for Automotive Local-area Multiplexing and Networking
PCV	Positive Crankcase Ventilation
PHP	Proximity and Headway Processing
PROM	Programmable Read Only Memory
PWM	Pulse Width Modulation
RF	Radio Frequency
RAM	Random Access Memory
ROM	Read Only Memory
RPM	Revolutions Per Minute
SAE	Society of Automotive Engineers
SAP	Situation Awareness Processor
SCP	Standard Corporate Protocol
SMS	Safety Monitoring System
SOF	Start of Frame

SOM	Start of Message
sps	samples per second
SRS	Supplemental Restraint System
STP	Shielded Twisted Pair
TCS	Traction Control System
TP	Twisted Pair
VAN	Vehicle Area Network
VAS	Variable Assist Steering
VLSI	Very Large Scale Integration
VPW	Variable Pulse Width Modulation
WSR	Wheel Slip Ratio