APPENDIX A

APPENDIXES TO HUMAN FACTORS STUDIES (CHAPTER 3)

TABLE OF CONTENTS

A / STUDY 1 ..... A-7
Subject Information Letter A-7
Informed Consent A-9
Test Instructions A-13
Brief Review of Test Instructions A-15
Detailed Description of the Surrogate Target A-17

A1 / Study 2 - Subject Information Letter A1-31

A2 / Study 2 - Informed Consent Statement A2-33

A3 / Study 2 - Test Instructions A3-37

A4 / Study 2 - Alert Modality Appropriateness Questionnaire (excerpts) A4-39

A5 / Study 2 - Crash Alert Appropriateness Questionnaire A5-41

A6 / Study 2 - Build an Interface Questionnaire A6-43

A7 / Study 2 - Name the System Questionnaire A7-45

A8 / Study 3 - Subject Information Letter A8-47

A9 / Study 3 - Informed Consent A9-49

A10 / Study 3 - Test Instructions A10-53

A11 / Study 3 - Name the System Questionnaire A11-55

A12 / Study 4-Subject Information Letter A12-57

A13 / Study 4 - Informed Consent A13-59

A14 / Study 4 - Part 1 Test Instructions A14-63

A15 / Study 4 - Part 2 Test Instructions A15-65

A16 / The Time-Course of the Brake Pulse Alert A16-67

A17 / Detailed Breakdown of Drivers' Responses A17-69

A18 / Process for Selecting the Visual Display Format used for Crash Alerts in the Three Driver Interface Studies A18-71
Symbol Design A18-71
Symbol Screening Process A18-71

Comprehension Estimation Testing A18-72
Open-Ended Comprehension Testing A18-73
Summary of Results from the Visual Display Format Selection Process A18-81

A19 / Process for Selecting the Sounds used for Crash Alerts In the Three Driver Interface Studies A19-83
Auditory Alert Development A19-83
Loudness Adjustment Procedure A19-84
Sound Evaluation Ratings A19-86
Weighted Sound Ratings A19-93
Summary of Results from the Sound Selection Process A19-97
Verbal Instructions Used in the Auditory Crash Alert Evaluation Procedure A19-98

A20 / Modeling CAMP Study 1 Data for Crash Alert Timing Purposes A20-101
Background of Modeling Effort A20-101
Characterization of Database Modeled A20-101
Study 1 Results Influential to Modeling Approach A20-102
Goals of Current Modeling Effort A20-103
Required Deceleration Parameter (RDP) Modeling Efforts A20-105
RDP-Range Model A20-105
RDP-Deceleration Model A20-107
Comparison of RDP-Range & RDP-Deceleration Models A20-107
Binning Modeling Efforts A20-109
Fixed Modeling Efforts A20-114
Summary of Modeling Efforts A20-115

REFERENCES A20-117

List of Figures

Figure 1 Visual Crash Alert Candidates A18-71
Figure 2 Mean Percentage of Population Estimated to Understand the Crash Alert Candidates for Industry and Outside Groups A18-74
Figure 3 Scatter Plot of Final (Statement 12) Ratings by Loudness Ratings for Each of the Candidate Alert Sounds A19-94

List of Tables

Table 1 The Time-Course of the Brake Pulse Alert Using 7 Samples at Each Speed With the Highest and Low Values Removed at Each Speed to Reduce Effect of Extreme Values A16-67
Table 2 Time-Course of the Brake Pulse Alert Using All 7 Samples at Each Speed A16-68
Table 3 Detailed Breakdown of Drivers' Responses to the Alert Noticeability Questionnaire for Study 3 and Study 4 ..... A17-69
Table 4 Examples of Responses for the Six Response Categories Used in the Open-Ended Comprehension Test A18-77
Table 5 Percentage of Responses in Each Category for Symbol 1 (Crash Symbol) and Symbol 5 (Radar Waves) A18-78
Table 6 Summary of Actions Stated for Each Context A18-79
Table 7 Mean Percentage of Driving Population Estimated to Comprehend Symbols by Open-Ended Comprehension Survey Participants A18-80
Table 8 Brief Description of Collision Alert Sound Candidates A19-85
Table 9 Rating Scale and Statements Used for Sound Ratings A19-87
Table 10 Mean Agreement Rating for Each Candidate Crash Alert Sound Across Each of the Thirteen Sound Rating Statements A19-91
Table 11 Sounds Ranked on Mean Ratings for Statement 1 and Statement 12 ..... A19-92
Table 12 Attribute and Weight with the Corresponding Sound Rating Statement A19-95
Table 13 Sounds Ranked by Weighted Mean Rating Totals for Attribute Statements A19-96
Table 14 Range and Required Deceleration Residuals (Observed Minus Expected Values) for Both the RDP-Range and RDP-Deceleration Models A20-108
Table 15 Average Range Residuals (Expected - Observed) in Feet for the Various Models Examined Across all POV Speed/POV Deceleration Combinations Examined in CAMP Study 1 ..... A20-111
Table 16 Comparison of the Mean Observed Hard Braking Onsets to the Predicted Hard Braking Onset Ranges (in Feet) for the Various Models Examined Using the Mean Delta V's (V_{SV}–V_{POV}) Observed Across all POV Speed/POV Deceleration Combinations Examined in CAMP Study 1 ..... A20-112
Table 17 Percent "Too Early"[1] Hard Braking Onsets / Percent "Too Late" Predicted Hard Braking Onsets Across all POV Speed/POV Deceleration Combinations Examined in CAMP Study 1 ..... A20-113
Table 18 Fixed Modeling Efforts A20-114

A / STUDY 1

Subject Information Letter

Dear Participant,

You have been asked to participate in research on driver's braking maneuvers. As a test participant, you will drive a real car at speeds ranging from 30-60 mph. The object you will be driving behind is an "artificial" rear-end of a vehicle made of a rubber compound. This "artificial car" will be towed about 40 feet (or one and one half car lengths) behind a real car. You will be asked to make "last-second" braking judgments in order to avoid colliding with the artificial car. The passenger in the car you will be driving will be a trained General Motors Milford Proving Ground test driver. The test driver will have access to passenger-side brakes and will override your braking judgments to avoid collisions with the artificial car. Whenever the test driver overrides your braking judgments, the lead vehicle towing the artificial car will immediately accelerate. If you do collide with the lead vehicle, you should know that the artificial car is constructed of a "soft" material such that, if struck, it is designed not to cause injury to either the test participant or researchers. Furthermore, the artificial car and towing vehicle are connected with a beam that is designed to collapse and absorb the collision impact if the artificial car is struck. At the conclusion of this study you will be asked to complete a questionnaire about your experience. At no time will you be asked to perform any unsafe driving actions.

You must have a valid, unrestricted, U.S. drivers license (except for corrective eye glasses), have a minimum of 2 years driving experience, be over the age of 18, pass hearing and vision tests (with correction allowed), be able to drive an automatic transmission vehicle without assistive devices or special equipment, be able to give informed consent, and not be under the influence of alcohol, drugs, or any other substances (e.g., antihistamines) which may impair your ability to drive. In addition you must not have a history of heart condition or prior heart attack, lingering effects of brain damage from stroke, tumor, head injury, or infection, epileptic seizures in the past 12 months, shortness of breath or chronic medical therapy for respiratory disorders, a history of motion sickness, a history of inner ear problems, dizziness, vertigo, or balance problems, diabetes for which insulin is required, chronic migraine or tension headaches, or be pregnant. You must not have used alcohol, drugs, or any other substances (e.g., antihistamines) which will impair your ability to drive for a period of no less than 24 hours prior to participation.

Risks: There are some risks and discomforts to which you expose yourself in volunteering for this research. This includes the risk of an accident normally associated with driving and braking a vehicle in response to a stopped or slowing lead vehicle. Unlike in normal driving, this stopped or slowing lead vehicle will be a "soft" artificial vehicle attached to a collapsible beam (as described above), and your passenger will be a trained General Motors Milford Proving Ground test driver. This test driver will have access to passenger-side brakes and will override your "last second" braking judgments to avoid collisions with the artificial car. Whenever the test driver

overrides your brakes, the (lead) tow vehicle will be instructed to immediately accelerate. If an accident does occur, the experimenters will arrange medical transportation to the Milford Proving Ground Medical facility. You will be required to undergo examination by medical personnel in the emergency room. You will be responsible for making arrangements for payment of the expenses of such treatment.

Benefits: There are no direct benefits to you from this research other than payment. However, by participating in this study, you are lending your experience as a driver to research on driver's braking behavior under certain conditions. You will not be informed as to the results of this study.

Payment: You will be paid $150 for participation in this study. The study will take about 2-2 ½ hours. Payment will be made by check at the time of participation.

Withdrawal: Participation in this study is voluntary. You may withdraw at anytime, for any reason, without penalty. Should you withdraw, you will be paid, in full, for any portion of the study you either completed or started.

Confidentiality: The data gathered in this study will be treated with anonymity. Shortly after you have participated, your name will be separated from your data and it will be given a number. Only the Principle Investigator will have access to this coding information. Your name will not appear in any reports or papers written about the project. Any videotapes of your data will be kept until they are no longer needed.

The researchers hope that you will agree to participate in this study. If you have any questions, please feel free at any time to ask the experimenter.

Once you have had your questions answered, please let the experimenter know whether you are interested in participating in this study. If you are willing to participate, the experimenter will ask you some questions to ensure that your background and experience match our research needs. If it is determined that you qualify to participate, you will be asked to read and sign an Informed Consent Form before you can actually participate in the study.

Informed Consent

I, _____, agree to participate in research on driver's braking maneuvers.

1. You are being asked to volunteer to be a subject in a research project whose purpose and description are contained in the Information Letter: The purpose of this experiment is to investigate driver's braking maneuvers. As a test participant, you will drive a real car at speeds ranging from 30-60 mph. The object you will be driving behind is an "artificial" rear-end of a vehicle made of a rubber compound. This "artificial car" will be towed about 40 feet (or one and one half car lengths) behind a real car. You will be asked to make "last-second" braking judgments in order to avoid colliding with the artificial car. The passenger in the car you will be driving will be a trained General Motors Milford Proving Ground test driver. The test driver will have access to passenger-side brakes and will override your braking judgments to avoid collisions with the artificial car. Whenever the test driver overrides your braking judgments, the lead vehicle towing the artificial car will immediately accelerate. If you do collide with the lead vehicle, you should know that the artificial car is constructed of a "soft" material such that, if struck, it is designed not to cause injury to either the test participant or researchers. Furthermore, the artificial car and towing vehicle are connected with a beam that is designed to collapse and absorb the collision impact if the artificial car is struck. At the conclusion of this study you will be asked to complete a questionnaire about your experience. At no time will you be asked to perform any unsafe driving actions.

There are some risks and discomforts to which you expose yourself in volunteering for this research. These include the risk of an accident normally associated with driving and braking a vehicle in response to a stopped or slowing lead vehicle. Unlike in normal driving, this stopped or slowing lead vehicle will be a "soft" artificial vehicle attached to a collapsible beam (as described above), and your passenger will be a trained General Motors Milford Proving Ground test driver. This test driver will have access to passenger-side brakes and will override your "last second" braking judgments to avoid collisions with the artificial car. Whenever the test driver overrides your brakes, the (lead) tow vehicle will be instructed to immediately accelerate.

3. The following precautions will be taken during your drive:

The experimenter will always be present in the test vehicle and will monitor your driving. They will ask you to discontinue participation if they feel the risks are too great to continue. However, as long as you are driving the research vehicle, it remains your responsibility to drive in a safe, legal manner.

The front seat experimenter will have an override brake pedal.

The vehicle is equipped with dual airbags and anti-lock brakes. Air bags inflate with great force, faster than the blink of an eye. If you're too close to an inflating air bag, it could seriously injure

you. Safety belts help you keep in position before and during a crash. You should always wear your safety belt, even with air bags. You will be required to wear your lap and shoulder belt system during this test anytime the car is on the road. You should sit as far back as possible while still maintaining control of the vehicle.

The vehicle is equipped with a fire extinguisher and first-aid kit. The lead vehicle has a cellular phone.

If an accident does occur, the experimenters will arrange medical transportation to the Milford Proving Ground Medical facility. You will be required to undergo examination by medical personnel in the emergency room. You will be responsible for making arrangements for payment of the expenses of such treatment.

Trained medical personnel will be immediately accessible by phone at all times during testing.

4. The data gathered in this study will be treated with anonymity. Shortly after you have participated, your name will be separated from your data and it will be given a number. Only the Principle Investigator will have access to this coding information. Your name will not appear in any reports or papers written about the project. Any videotapes of your data will be kept until they are no longer needed. It is possible that, should you be involved in an accident during testing, the researchers will have to release your data on your driving in response to a court order.

5. You will be paid $150 for participation in this study. The study will take about 2-2 ½ hours. Payment will be made by check at the time of participation.

6. There are no direct benefits to you from this research other than payment. However, by participating in this study, you are lending your experience and expertise as a driver to investigate driver's braking maneuvers. You will not be informed as to the results of this study.

7. By agreeing to participate, you certify that you possess a valid, unrestricted, U.S. drivers license (except for corrective eye glasses), have a minimum of 2 years driving experience, are over the age of 18, have normal hearing and vision (with correction allowed), are able to drive an automatic transmission vehicle without assistive devices or special equipment, are able to give informed consent, and are not under the influence of alcohol, drugs, or any other substances (e.g., antihistamines) which may impair your ability to drive. You also certify that you do not have a history of heart condition or prior heart attack, lingering effects of brain damage from stroke, tumor, head injury, or infection, epileptic seizures in the past 12 months, shortness of breath or chronic medical therapy for respiratory disorders, a history of motion sickness, a history of inner ear problems, dizziness, vertigo, or balance problems, diabetes for which insulin is required, chronic migraine or tension headaches, or are pregnant. Additionally, you have not used alcohol, drugs, or any other substances (e.g., antihistamines) which will impair your ability to drive for a period of no less than 24 hours prior to participation.

8. The experimenters will answer any question that you might have about this project and you should not sign this informed consent form until you are satisfied that you understand all of

the previous descriptions and conditions. You may contact the principal investigator at the following address and telephone number:

Raymond J. Kiefer, Ph.D.
CAMP
Discovery Centre
39255 Country Club Drive
Suite B-30
Farmington Hills, MI 48331
(810) 848-9595 ext. 15

9. If information becomes available which might reasonably be expected to affect my willingness to continue participating in this study, this information will be provided to me.

10. Participation in this study is voluntary. You may withdraw from this study at any time, and for any reason, without penalty. Should you withdraw, you will be paid, in full, for any portion of the study you either completed or started.

11. By signing this form you certify, to the best of your knowledge, you have no physical ailments or conditions which could either be further aggravated or adversely affected by participation in this study.

I have read and understand the scope of this research program and I have no other questions. I hereby give my consent to participate, but I understand that I may stop at anytime, if I choose to do so.

Participant:

Name:_____

Address:_____

Telephone:_____

Signature:_____Date:_____

Researcher:

Signature:_____Date:_____

Test Instructions

We would like now to go over the instructions of the study. The purpose of this study is to understand how drivers brake under certain conditions. All of the testing will be conducted on a test track, which will be closed, to all other traffic during testing. The study is being conducted jointly by General Motors and Ford.

During the test, you will be asked to drive a Ford Taurus, which will be equipped with various equipment designed to measure your driving performance. When you arrive at the test track, you will be given some time to become familiar with this vehicle while the car is parked, and then while it is moving. The passenger in the car you will be driving will be a trained General Motors Milford Proving Ground test driver. This test driver will be giving you further instructions throughout the test.

During some portions of the test, you will be asked to try and maintain a certain speed, either 30, 45, or 60 mph. Please accelerate in a comfortable, quick manner to the instructed speed. During other parts of the test, you will be told to just drive at a comfortable distance behind an object. Throughout the test, the object you will be driving behind is an “artificial” rear-end of a vehicle. This lead “artificial” car will be towed about 40 feet (or one and one half car lengths) behind a “real” towing vehicle. You will be asked to make both “normal” and “last-second” braking judgments in order to avoid colliding with the lead car. When making your braking judgments, please respond as if the lead car was a real car. The lead car will sometimes be stationary (or parked) and other times be moving. When the lead car is moving, it will at times brake and come to a complete stop. The lead car is equipped with working brake lights/stop lamps. The lead car driver will brake with various braking intensities throughout the test, ranging from normal braking to relatively hard braking.

The test driver will have access to passenger-side brakes. When necessary, the test driver will override your braking judgments to avoid collisions with the lead car. Should this occur during your “last-second” braking judgments, please do not be concerned of frustrated, just do the best you can. Whenever the test driver does override the brakes, the towing vehicle ahead of the lead car will immediately accelerate. The towing vehicle will also be driven by a trained General Motors Milford Proving Ground test driver. If you do collide with the lead car, you should know that this vehicle is constructed of a “soft” material such that, if struck, it is designed not to cause injury to either the test participant or researchers. Furthermore, the lead car and the towing vehicle are connected with a beam, which is designed to collapse and absorb the collision impact if the lead car is struck. At no time will you be asked to perform any unsafe driving actions.

After the test is completed, you will be returned here. You will then be given a chance to refresh, and receive further explanation about the study. You will then be paid $150 by check and dismissed. Your total participation time will be 2-2 ½ hours.

If you now have any questions about the test, please do not hesitate to ask.

Brief Review of Test Instructions

The object you will be driving behind is an “artificial” rear-end of a car. This car is equipped with working brake lights/stop lamps. This lead car will sometimes be stationary (or parked), and other times this car will be moving.

Before each set of tests, I will be giving you instructions as to whether I want you to maintain a certain specific speed while following or approaching this lead car, or whether I want you to just drive at a comfortable distance behind this car. Please accelerate in a comfortable, quick manner to the instructed speed. I will also be giving you instructions as to when I would like you to brake in response to the slowing or stopping of the lead car. For example, during some portions of the test, I will ask you to brake in response to the lead car exactly the way you normally would during driving. During other portions of the test, I will ask you to brake at the “last second” to the slowing or stopping of the lead car. When making your braking judgments, please respond as if the lead car was a real car. The lead car driver will brake with various braking intensities throughout the test, ranging from normal braking to relatively hard braking.

Please note I will have access to passenger-side brakes. When necessary, I will override your braking judgments to avoid collisions with the lead car. You will normally here a beeping sound before I apply the brakes. This sound is my signal to apply the brakes. This signal is turned on based on the distance needed to stop our car and the current distance between our car and the lead car. If I do override your brakes during braking, please do not panic. Just continue to safely steer the car, while I brake the car to a complete stop. Also, please do not be concerned or frustrated if I do override your brakes during some tests. Just continue to do the best you can throughout the entire testing.

Whenever the beeping sound is turned on, the driver of the towing vehicle will immediately accelerate. This driver is also a trained General Motors Milford Proving Ground test driver. If you do collide with the lead car, you should know that this car is constructed of a “soft” material such that, if struck, it is designed not to cause injury to either the test participant or researchers. Furthermore, the lead car and towing vehicle are connected with a beam, which is designed to collapse and absorb the collision impact if the lead car is struck.

Detailed Description of the Surrogate Target

(Provided by Roush Industries, Inc.)

Objective - The objective was to construct a surrogate target that was capable of absorbing energy from a 20-mph impact from a 3,500-lb. vehicle and not be destroyed. The target had to look like a real vehicle when viewed from the rear. This includes functional taillights and clear vision when viewed through the rear window of the target. The target had to be transportable via common shipping methods. The target had to be able to absorb energy without deploying the airbag in either the Subject Vehicle (SV) or the Principal Other Vehicle (POV). The target had to be able to be towed by a 1997 Ford Taurus SHO (POV), which was equipped with a class 2 hitch and a 2-inch ball for towing.

Body - In order for the target to absorb energy due to a rear collision, the simulated body sheet metal was designed to deform upon impact and return to its original shape. To accomplish this, a flexible polyurethane material (Linex) was selected to mold the rear body sheet metal geometry of the target. To create the body of the target, a high temperature epoxy mold was taken directly from the rear section of a 1997 Mercury Sable.

Four coats of Linex Polyurethane were sprayed into the open cavity mold. After the initial four coats of Linex were applied, a PVC frame structure designed to support the body shell was placed into the mold. Foam padding blocks were placed between the frame and the shell prior to permanently bonding the PVC frame to the shell. The foam padding was also used to create structural reinforcing ribs across the rear deck and roof areas for added support. With the frame in place, five more coats of Linex were applied to the mold to attach the body shell to the PVC frame structure. The entire frame and shell assembly was cured in the mold for 24 hours before removal. After the Linex had fully cured, cutouts for the taillights were made and the production taillight assemblies were installed into the surrogate body shell.

A rear window was created by vacuum forming a piece of clear polycarbonate over a plaster mold. This was incorporated into the body shell using a hinge at the top center of the window and 1/8-inch rivets evenly spaced 12inches on center around the perimeter of the window. This design feature was incorporated to allow the window to break away from the body shell upon impact and return to its original position.

The body was attached to the trailer with four U-bolts and four Through bolts. The 4 U-bolts fastened the plywood header at the front of the shell body to the hoop of the trailer. Two of the Through bolts mate the plywood header to the top of the hoop. The other two Through bolts were used at the back of the trailer to locate the body laterally on the trailer. Two cables were used to help support the mass of the body shell while it is mounted on the trailer. These cables were attached at the front of the trailer, run through guides in the top of the trailer hoop, and down to eyebolts located in the rear of the PVC frame. Turnbuckles were incorporated into the cables to allow tension adjustment.

Frame - A trailer was designed to carry the simulated vehicle body shell during test maneuvers. The trailer frame was constructed using 2-inch x 2-inch x 120-inch mild steel tubing. Refer to

the end of this Appendix for detail drawings of the trailer frame. A 1/2-inch thick sheet of exterior grade plywood was mounted onto the mild steel frame to establish a horizontal deck surface. A rear bumper was added to the trailer frame to prevent the SV from lodging itself underneath the trailer in the event of a rear collision. The addition of the bumper also insured that collision impact loads will act along the axis of the trailer. The bumper height was designed to be slightly less than that of the SV. The steel bumper is suspended 15 inches off the rear of the trailer by four 2.5-inch springs rated at 250 lb./inch. A sliding joint was incorporated into the trailer frame to support the mass of the bumper and insure that all bumper motion was in the axial direction. A foam absorber was molded and installed between the steel trailer bumper and the polyurethane body shell. This foam bumper was molded using a high-density 2-part expandable foam material.

The design of the trailer originally incorporated three energy absorbers between the front and rear section of the trailer frame. By incorporating the rear spring bumper, this feature was deemed unnecessary, and these parts have been deleted from the design.

Telescoping Boom - The trailer tongue assembly was designed with a telescoping boom feature that functioned as an energy absorber during a rear collision with the target. Refer to the end of this Appendix for detail drawings. The telescoping boom is designed to collapse axially upon rear impact loading. The boom consists of 4 sections of 1/4-inch thick aluminum tubing, and a small hitch section. The first, second, and fourth sections were all constructed using six-inch diameter aluminum tubing, each section being ten feet long. The first section incorporated the ball hitch receiver and attached to the second section via mating flanges. The mating flanges consist of 1/2-inch thick aluminum plates that were welded to the end of each aluminum tube section (except for the hitch section, which is made of steel). The second section incorporated a flange at the first and second section interface only. The second to third section interface did not include a flange to allow for a slip fit with the third section. The third section consists of an aluminum tube having a 5.5-inch diameter by ten feet in length. The tube diameter was machined down to 5.5 inches to allow for a slip fit between the second and fourth sections. Four 1/2-inch through holes were drilled into the third tube section to accept through bolts. The second and fourth sections were slotted horizontally along the axis of each tube to act as a guide for the through bolts located in section three. The fourth section is also open at the third and fourth section interface and is flanged at the trailer interface where it is it is bolted to the trailer. All mating flanges were bolted together with (4) 2-inch x1/2-inch bolts at each corner of the flanges. Large 1/2-inch washers were used between the bolt heads and the nuts to prevent gouging of the outer tubes as the bolts slide through the slots. Two bolts were used at either end to prevent sagging in the boom and insure that the tube will collapse and slide along the axis of the boom during an impact.

Brakes - An electric trailer braking system was used to improve braking stability and improve safety during test maneuvers. The trailer brakes are primarily activated directly from the brakes of the POV but can also be activated independently through a manual override system. In the linked mode, the braking system utilizes a sensor that proportions the braking force of the trailer with that of the POV. This sensor is adjustable to allow brake proportioning between the trailer and the tow vehicle. This was used to calibrate the braking system to the weight of the Surrogate Target assembly. In the independent mode, the trailer brakes can be activated separately from the

POV via a manual switch. This would allow the brakes of the trailer to be activated independently without activating the brakes in the POV.

Electrical - All electrical wiring was custom fabricated to be modular in design. Quick disconnect, all weather connectors were used to ease installation and removal of the body. The production taillights used the production wiring sub-assemblies, which were easily disconnected from the main harness of the trailer. Quick disconnect, all weather connectors were also used in the wiring harness at the end of each boom section in case the boom needed to be shortened or lengthened. The wiring harness was covered with a protective shield of convolute tubing and secured to the trailer. All wiring was tested to insure all lights functioned properly. All wiring required to support the trailer brakes, taillights and high-mounted stoplight was constructed and fastened to the deck of the trailer. Quick-disconnect connectors were used to ease installation and removal of the body. Quick-disconnect connectors were used in the wiring harness at the end of each section of the boom. Wiring was made modular in case the boom was to be shortened by sections.

Component List

(1) 55 gallon drum Linex part B
(1) 55 gallon drum Linex part A
(1) Right taillight – part # F6DZ13404B
(1) Left taillight – part #FF6DZ13405B
(1) Right reflector – part #F7DZ13A565AB
(1) Left reflector – part #F7DZ13A565AA
(1) High mount third brake light – part #F6DZ13A613AD
(2) Stop signal sockets – part #F6DZ13410B
(2) Turn signal sockets – part #F6DZ13411A
(4) Brake & turn bulbs – part #F5DZ13466B
(2) Side marker bulbs – part #CZAZ13466C
(2) High mount third brake light bulb – part #D7TZ13466A
(1) 3,500-lb. Class 2 hitch
(48 feet) 2” x 2” .120” steel tubing
(24 feet) 1” x 1” x .090” steel tubing
(12 feet) 1” x 2” x .090” steel tubing
(1) 2’ x 4’ .25’ steel plate
(30) feet 6” x .25 6061-T6 aluminum pipe
(10 feet) 5.5” x .25 6061-T6 aluminum pipe
(1) 2’ x 4’ x .50 aluminum plate
(36 feet) 2.5” PVC pipe
(18) 90-degree PVC elbow fittings
(12) PVC “T” fittings
(1) 2” 3,500-lb. trailer hitch coupler
(2) Light duty ratcheting tie downs
(1) Set 7” brakes
(2) 7” brake drums
(2) Brake flanges
(1) Brake controller
(1) 15 amp inline fuse
(1) Circuit breaker
(2) 5.30 x 12 B tires and rims
(1) 2,000-lb. axle assembly
(1) Sheet ½” CDX plywood
(4) Eiback 250 lb./in. 2.55” x 14” coil springs – part #1400-250-0250
(4) 7” x ½” x 13 grade 8 bolts
(16) 2” x ½” x 13 grade 8 bolts
(20) ½” x 12 grade 8 bolts
(40) ½” flat washers
(1) 6” x 1” hinge
(1) Sheet 1/8” polycarbonate
(2) ¼” turnbuckles
(25 feet) ¼ steel cable
(1) Gallon foam, part A
(1) Gallon foam, part B

PVC FRAME ASSEMBLY

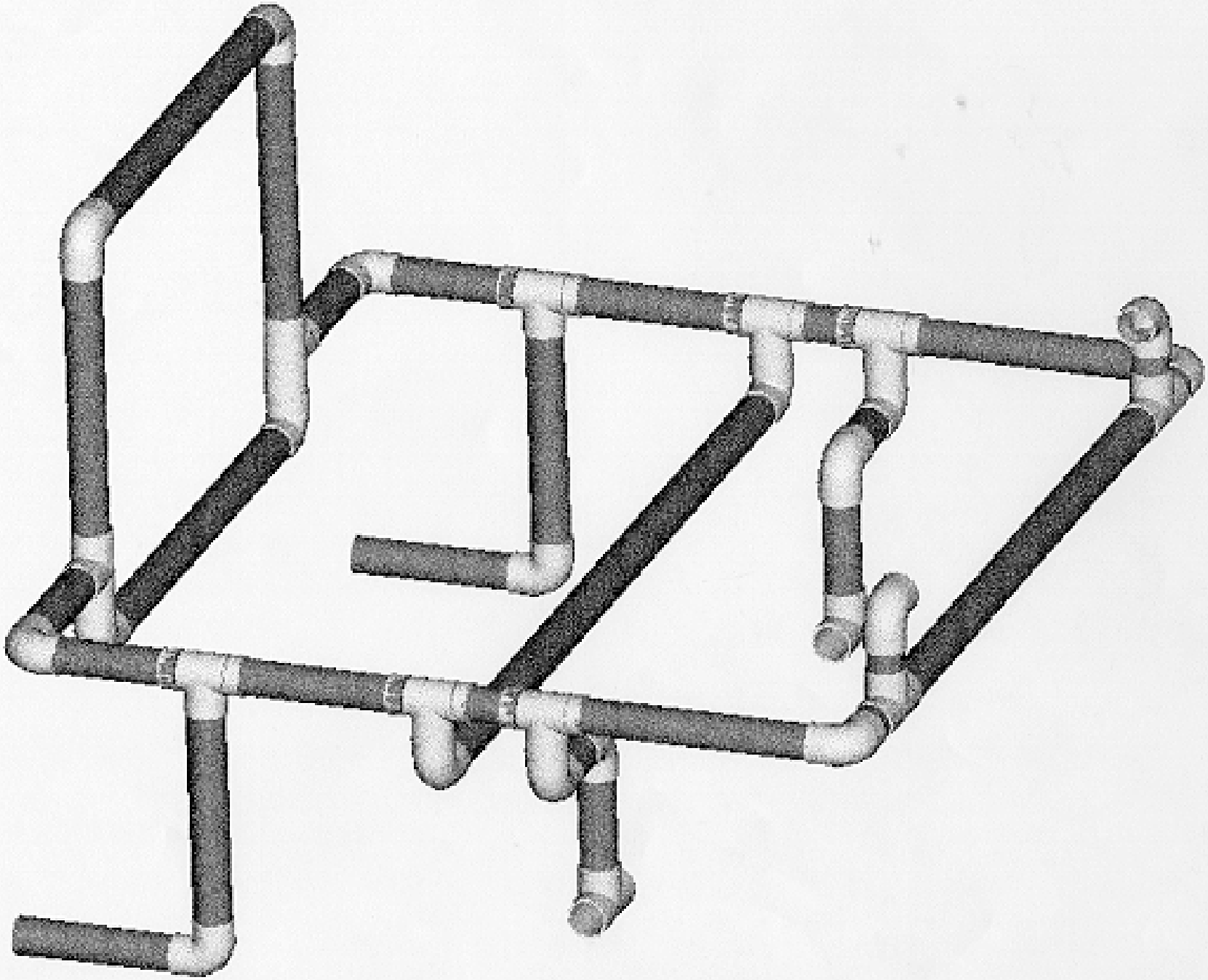

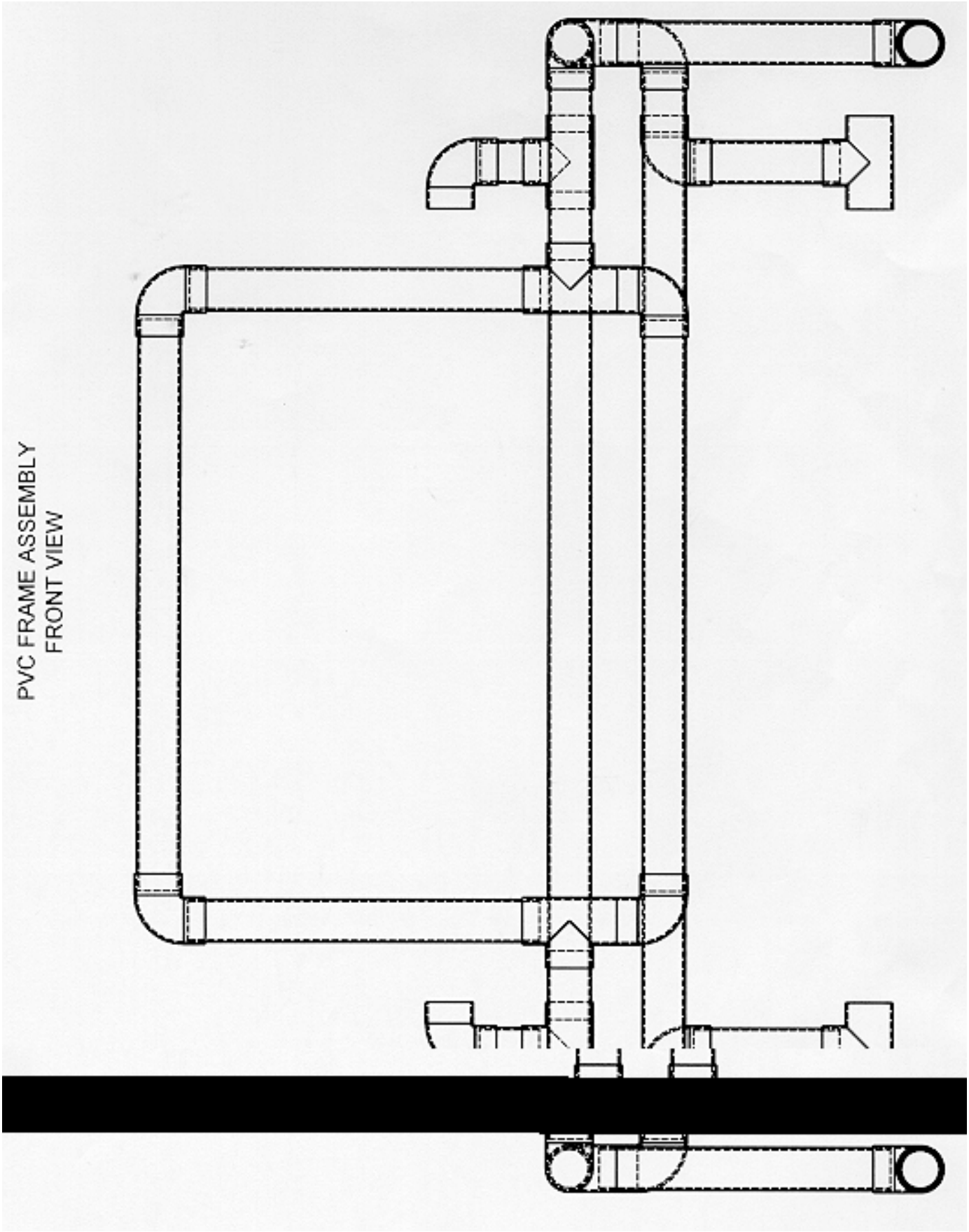
PVC FRAME ASSEMBLY
FRONT VIEW

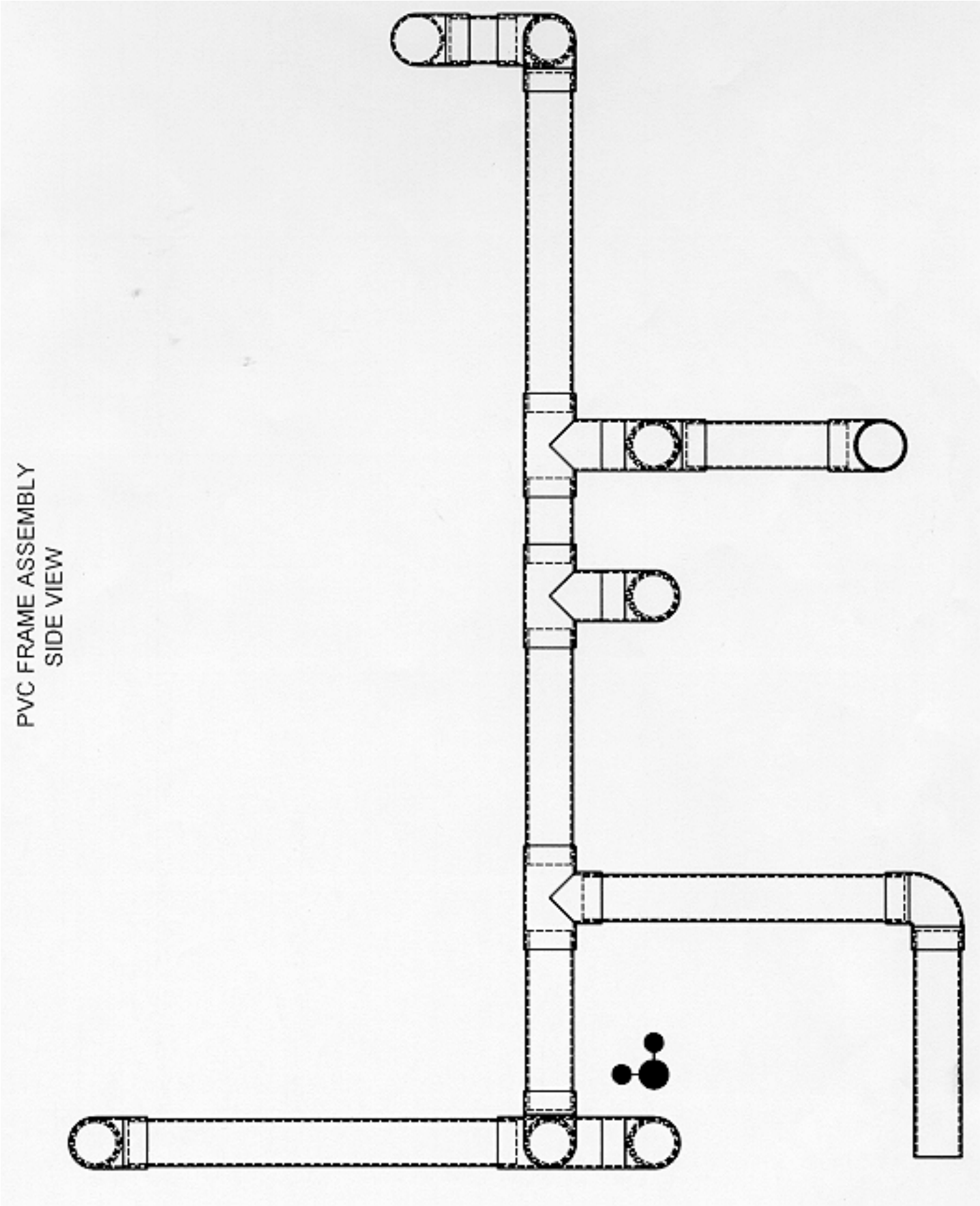
PVC FRAME ASSEMBLY
SIDE VIEW

PVC FRAME ASSEMBLY
TOP VIEW

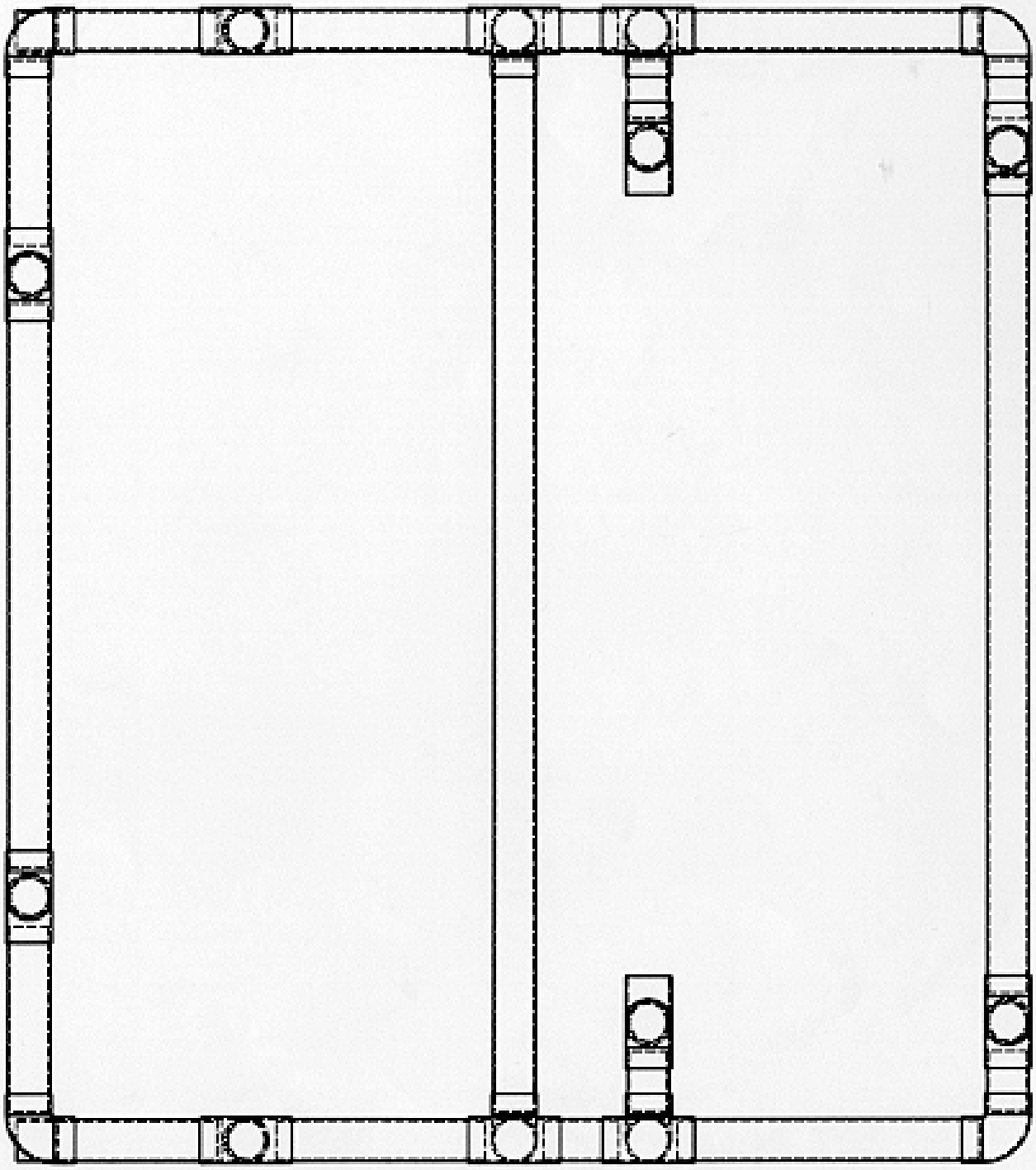

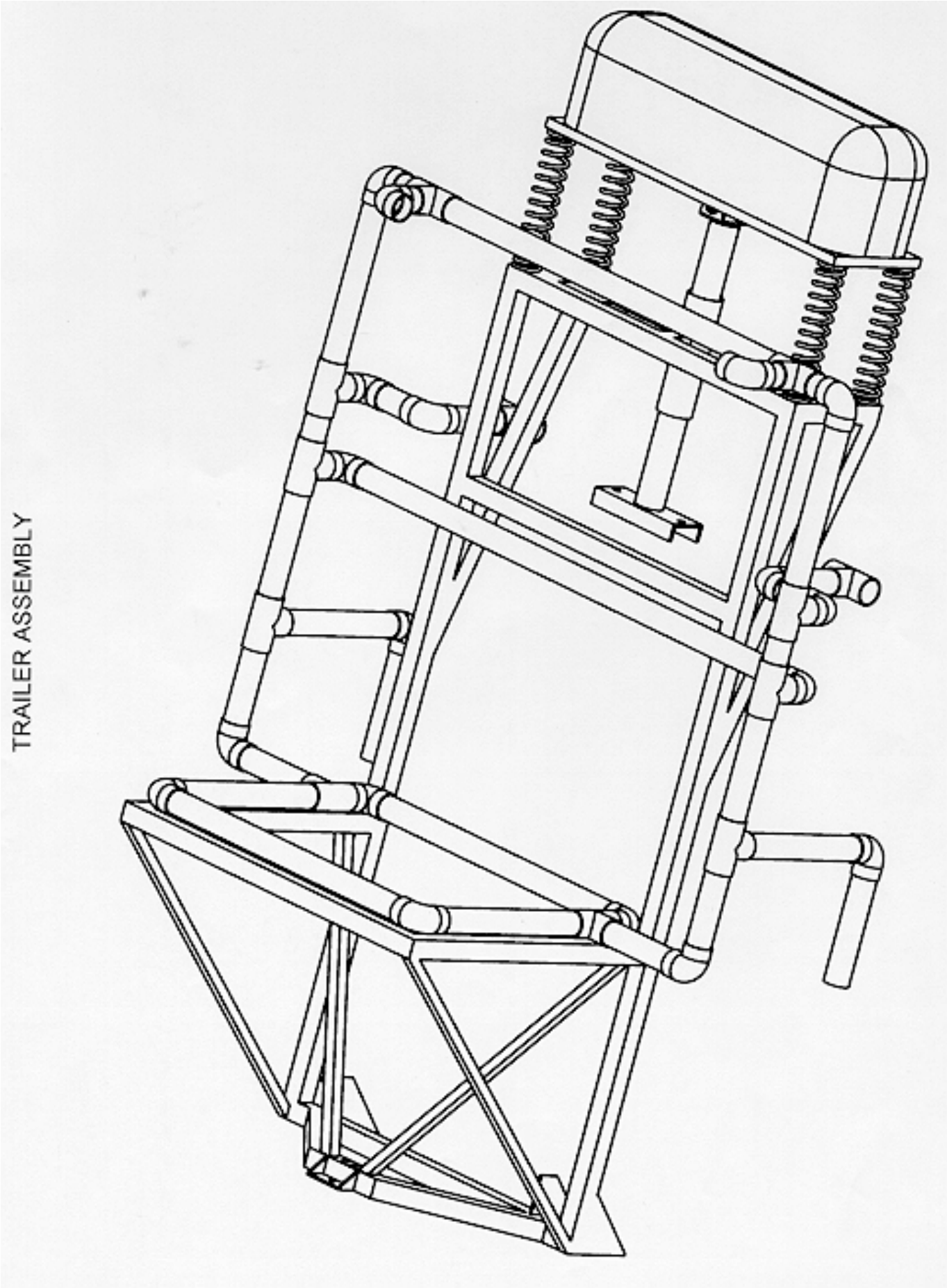
TRAILER ASSEMBLY

TRAILER FRAME

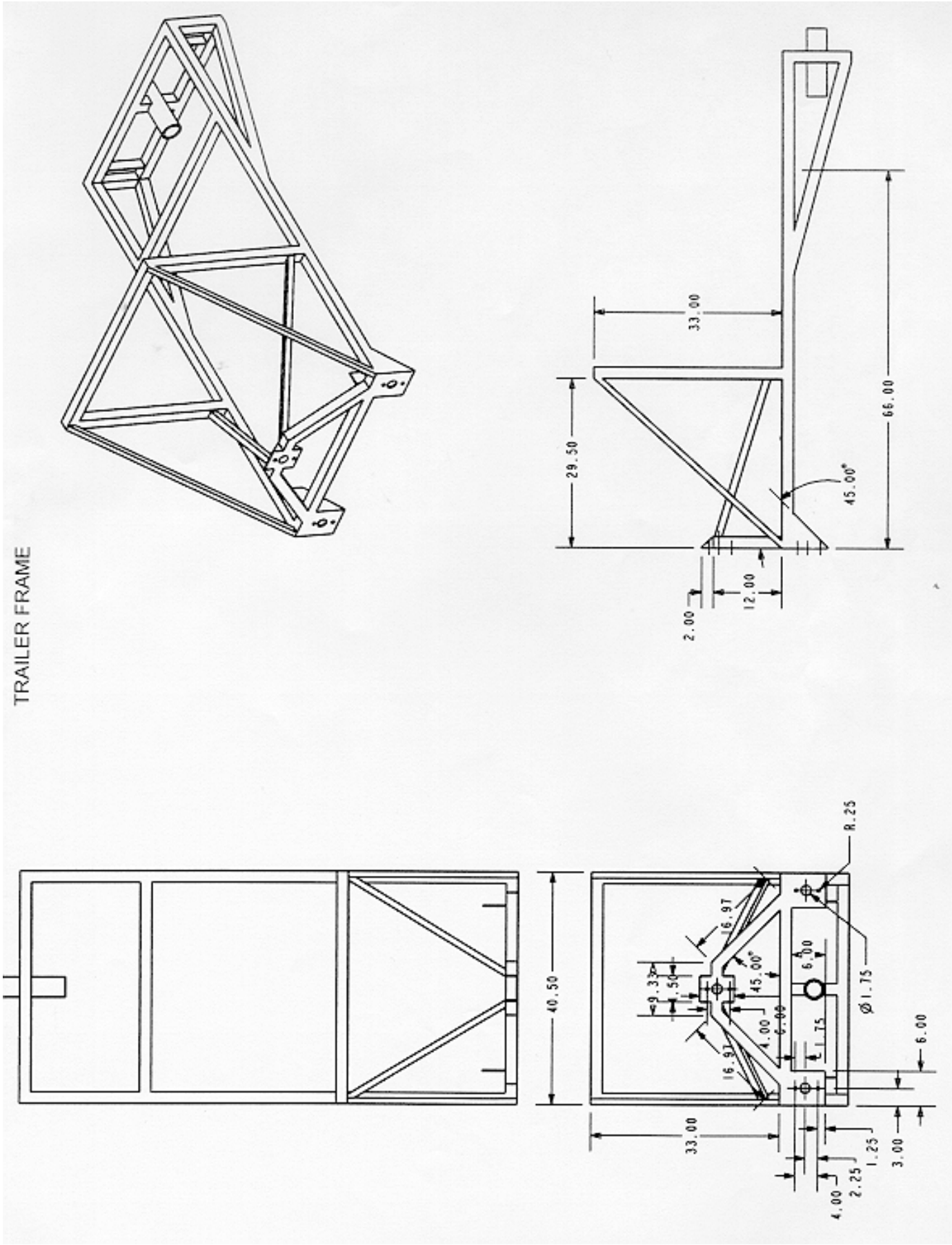

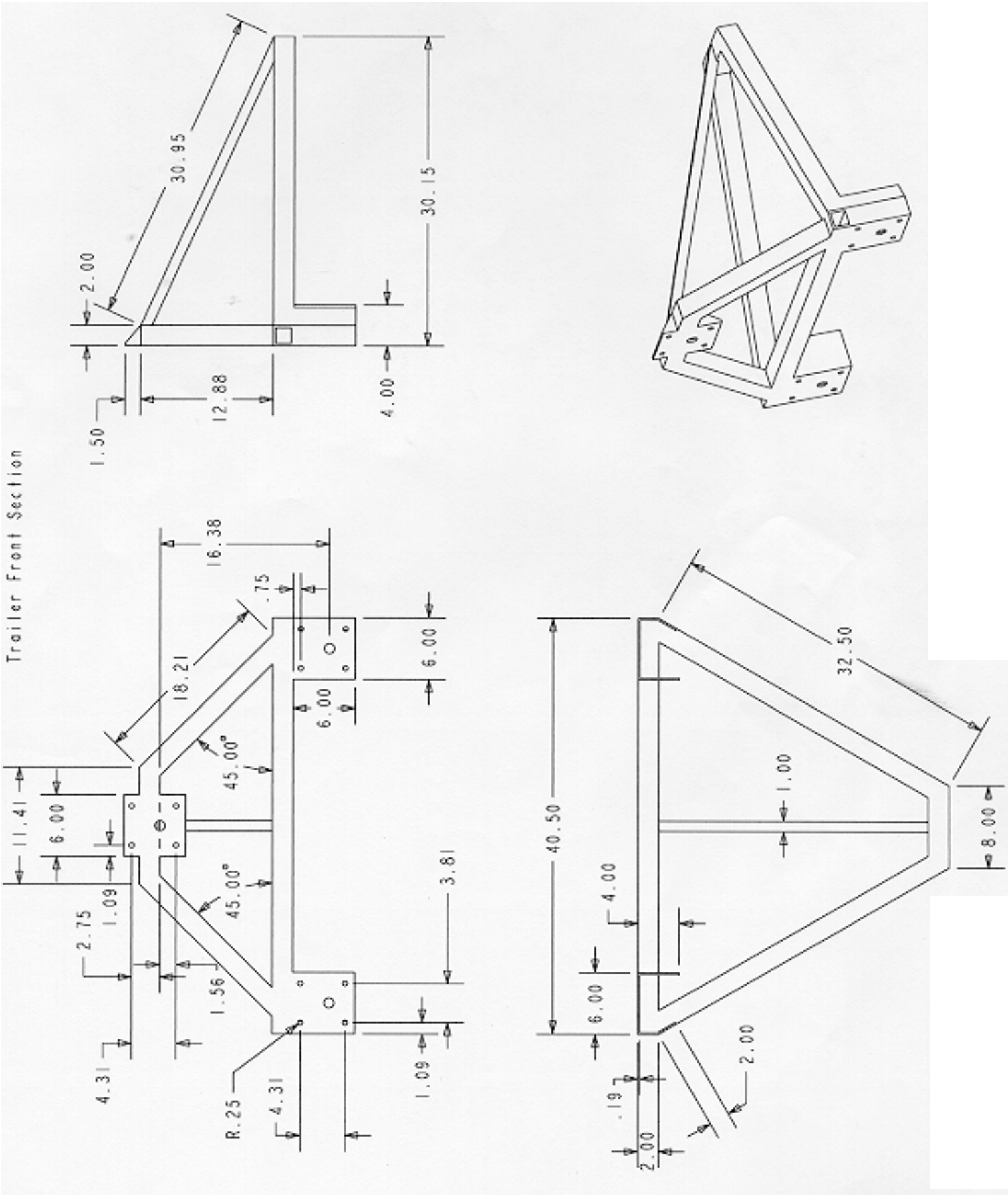
Trailer Front Section
30.95
2.00
1.50
12.88
30.15
4.00
16.38
.75
18.21
6.00
6.00
45.00°
11.41
6.00
45.00°
3.81
2.75
1.09
1.56
4.31
R.25
4.31
1.09
32.50
1.00
8.00
40.50
4.00
6.00
2.00
.19
2.00

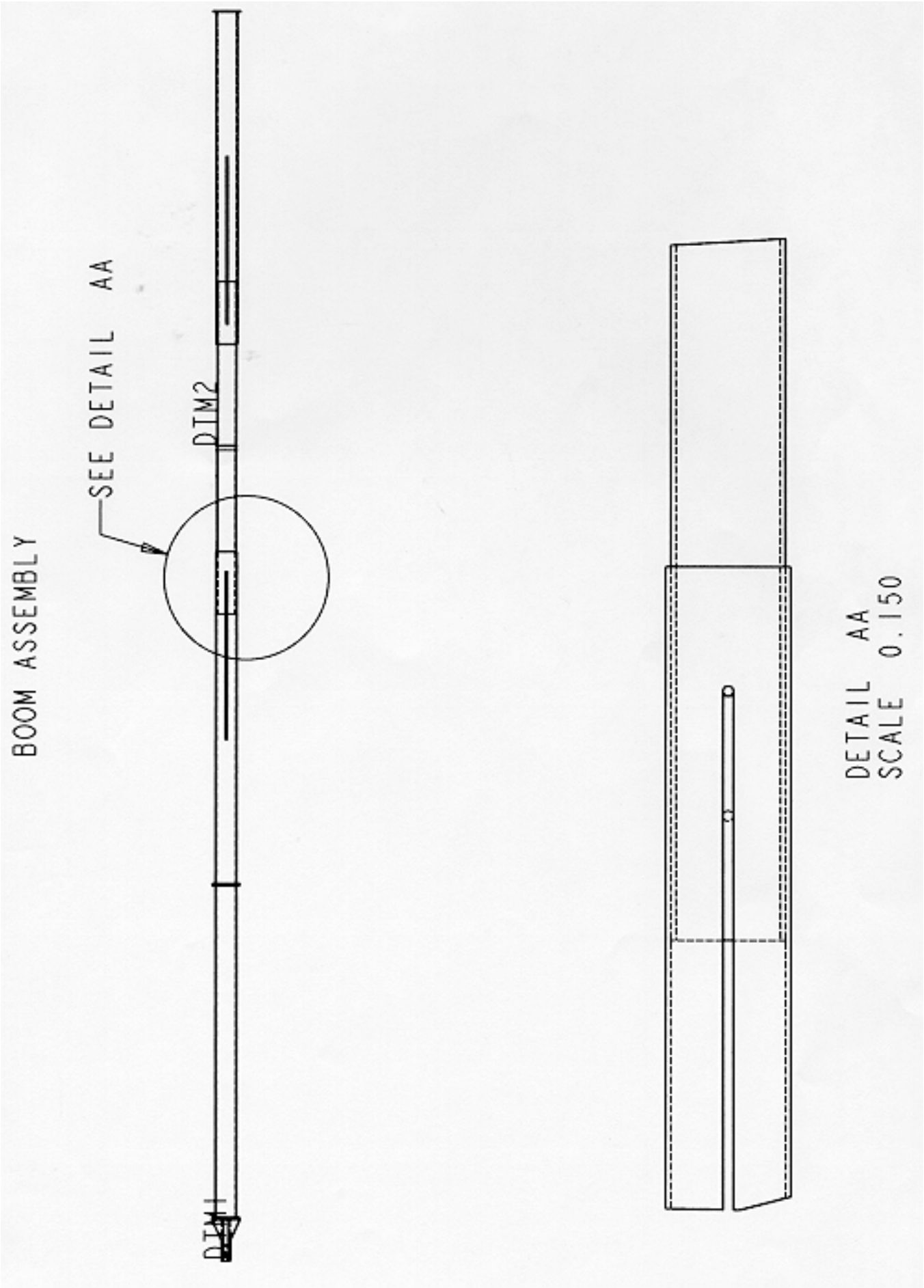
BOOM ASSEMBLY
SEE DETAIL AA
DTM2
DTM1
DETAIL AA
SCALE 0.150

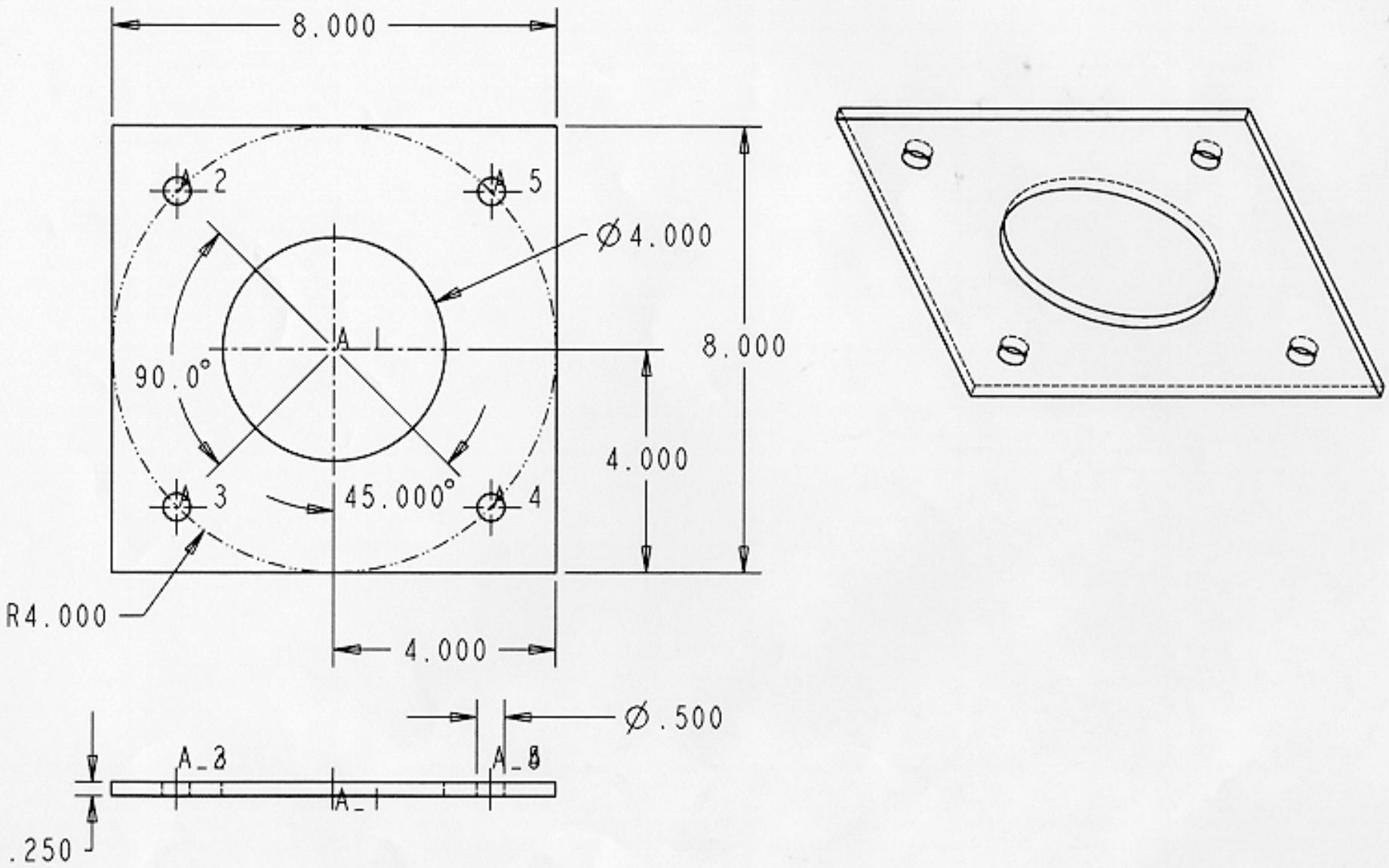

Aluminum Flange for Boom Sections

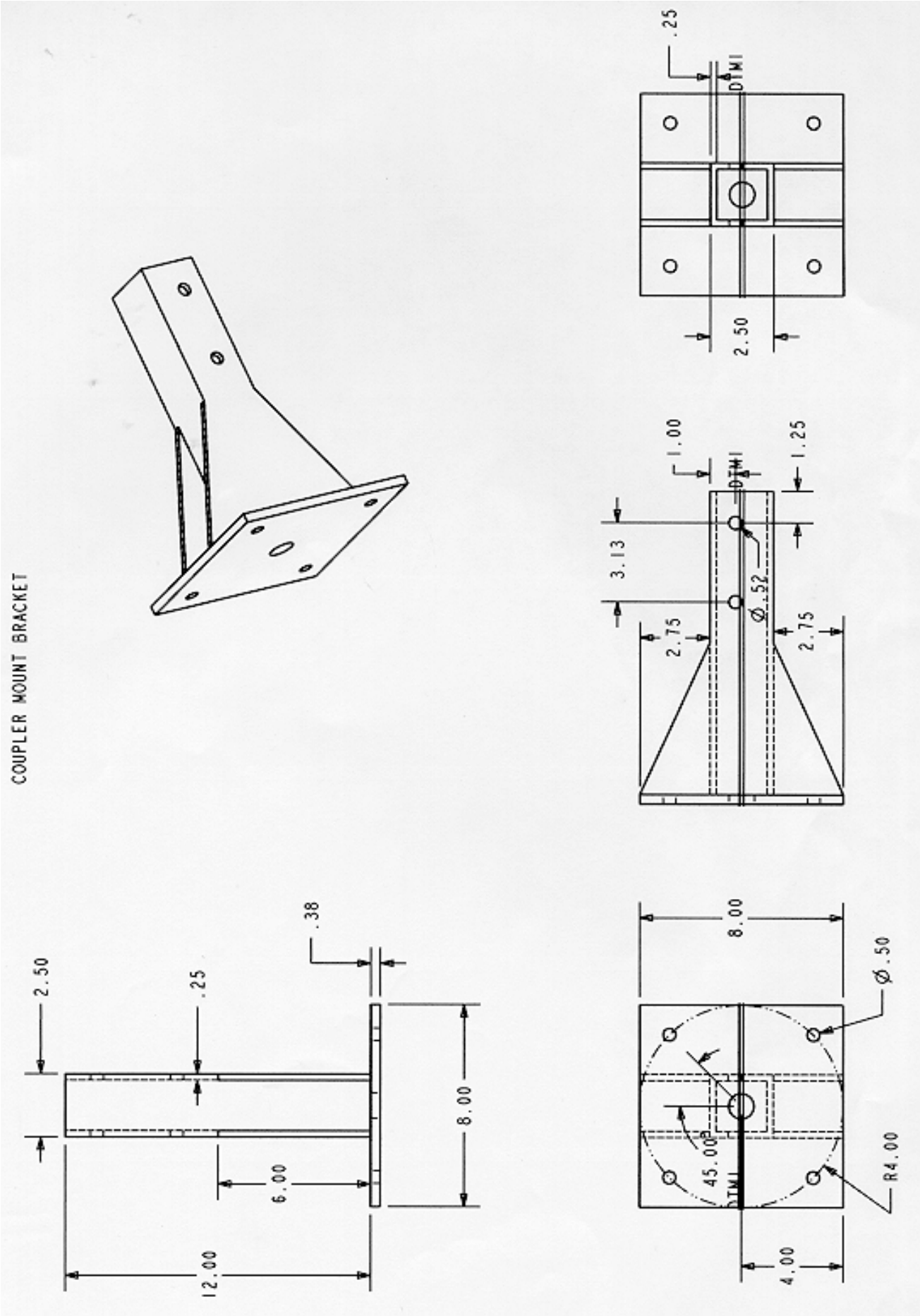
COUPLER MOUNT BRACKET
2.50
.25
.38
12.00
6.00
8.00
.25
DTMI
2.50
1.00
DTMI
1.25
3.13
Ø.52
2.75
2.75
8.00
Ø.50
45.00°
DTMI
R4.00
4.00