APPENDIX E

EQUIPMENT LISTS AND PUBLIC ROAD TEST ROUTES

TABLE OF CONTENTS

E TEST EQUIPMENT E-4

E.1 Test Equipment List for Test Methodology Validation Activities..... E-4
E.1.1 Computer Equipment E-6
E.1.2 Signal Conditioning Extensions for Instrumentation (SCXI) Chassis.....E-13
E.1.3 Dynamic Measurement Unit E-17
E.1.4 Global Position System Receivers E-19

E.2 Public Road Test Routes E-23

E.3 Analysis of Uncertainty in Determining FCW Compliance with a Closing Speed-dependent Minimum Warning Range Requirement E-26
E.3.1 Introduction.....E-26
E.3.2 The Performance Metric and its Error Sources.....E-26
E.3.3 The Metric ε_R as a Function of the Four Variables E-27
E.3.4 Partial Derivatives of the Metric.....E-29
E.3.5 Uncertainties in the Four Variables E-29
E.3.6 Computing Uncertainty in the Error Metric.....E-30

E.4 Minimum Required Sampling Rate for Onboard Data Acquisition System..... E-33
E.4.1 Longitudinal Position of SV, POVs, and Clutter.....E-33
E.4.2 Longitudinal Speed of SV and POVs E-33
E.4.3 Longitudinal Acceleration of SV and POVs.....E-33
E.4.4 Lateral Position of Clutter, Stationary POVs and Road E-34
E.4.5 Lateral Position of SV and Moving POVs.....E-35
E.4.6 Yaw Rate of SV and POV E-35
E.4.7 Visibility E-35
E.4.8 SV Brake Pedal Actuation Time.....E-35
E.4.9 Roadway Horizontal Curvature (Direction Change) E-35
E.4.10 Roadway Elevation Change (For Super-Elevation And Vertical Curvature).....E-35

E TEST EQUIPMENT

E.1 Test Equipment List for Test Methodology Validation Activities

The six tables below list equipment used during the testing that supported the validation of the objective test methodology. This equipment list supports the discussions in Chapter 7. (Note that human factors testing used different vehicles and equipment, as reported in Chapter 3). The equipment here is divided into four groups, a group for each test car and another for the GPS base station. Also listed are the test vehicles and the radios. Note that the video equipment was not necessary for the POV #2 group. Miscellaneous items used during test execution, such as traffic cones, are not listed.

SV Instrumentation	Manufacturer	Model	Cost
Power Inverter	Tripp Lite	PV400	$170
Power Supply	Radio Shack	22-127E	$30
Local Area Network	Black Box		$1,428
RF modem	REPCO, Inc.	RDNFSK6U6UC	$865
Dynamic Measurement Unit	Crossbow	DMU-6	$2,495
Chassis	National Instruments	SCXI-1001	$8,000
Global Positioning System	NovAtel	Propak II RT2 w/ 502 antenna	$20,145
Computer	Micron	TransPort XKE	$4,800
Video Recorder	Sony	SVO2100	$2,285
Monitor	Citizen	M329	$240
Camera	Elmo	MN42H CCD CC421E	$2,442
Total			$42,900

Table E-1 Instrumentation and Costs for Subject Vehicle

POV #1 Instrumentation	Manufacturer	Model	Cost
Power Inverter	Tripp Lite	PV400	$170
Power Supply	Radio Shack	22-127E	$30
Local Area Network	Black Box		$1,428
RF modem	REPCO, Inc.	RDNFSK6U6UC	$865
Dynamic Measurement Unit	Crossbow	DMU-6	$2,495
Chassis	National Instruments	SCXI-1001	$8,000
Global Positioning System	NovAtel	Propak II RT2 w/ 502 antenna	$20,145
Computer	Micron	TransPort XKE	$4,800
Video Recorder	Sony	SVO2100	$2,285
Monitor	Citizen	M329	$240
Camera	Elmo	MN42H CCD CC421E	$2,442
Total			$42,900

Table E-2 Instrumentation and Costs for POV #1

POV #2 Instrumentation	Manufacturer	Model	Cost
Power Inverter	Tripp Lite	PV400	$170
Power Supply	Radio Shack	22-127E	$30
Local Area Network	Black Box	LW0026A	$1,428
RF modem	REPCO Inc.	RDNFSK6U6UC	$865
Dynamic Measurement Unit	Crossbow	DMU-6	$2,495
Chassis	National Instruments	SCXI-1001	$8,000
Global Positioning System	NovAtel	Propak 3151RE w/ 501 antenna	$6,140
Computer	Micron	TransPort XKE	$4,800
Total			$23,928

Table E-3 Instrumentation and Cost for POV #2

GPS Base Station	Manufacturer	Model	Cost
Power Inverter	Power Star	POW200	$100
Power Supply	Interstate Batteries	12 Volt 7.0 AH	$115

GPS Base Station	Manufacturer	Model	Cost
Global Positioning System	NovAtel	Propak II STD w/ 503 antenna	$17,725
Tripod	SECO	5119	$835
Computer	Micron	TransPort	$4,800
Total			$23,575

Table E-4 Equipment and Costs for GPS base station

Radio Items	Manufacturer	Model	Cost
Unit One	NexTel	370i	$201
Unit Two	NexTel	370i	$201
Unit Three	NexTel	370i	$201
Unit Four	NexTel	370i	$201
Total			$ 804

Table E-5 Cost for miscellaneous communication equipment

Test Vehicles Items	Manufacturer	Model	Cost
Car One	Chevrolet	’97 Lumina White	$18,222
Car Two	Chevrolet	’97 Lumina Blue w/ Eaton Vorad microwave radar	$18,222
Car Three	Mitsubishi	‘96 Diamante w/ laser radar	$12,300
Truck One	Ford	’95 F-700 w/ 24’ bed, GVWR 18,000#	$915
Truck Two	Ford	’95 F-700 w/24’ bed, GVWR 18,000#	$915
Motorcycle	Honda	’84 Nighthawk 650cc	$340
Total			$50,914

Table E-6 Vehicles used in executed tests

E.1.1 Computer Equipment

Micron TransPort™ XKE Systems

- TransPort XKE specifications
- Motherboard: 266MHz Intel Pentium® MMX P55CLM processor
- Notebooks
- Intel(R) PCI 430TX Chipset

  - 512K L2 pipeline burst cache
  - 60ns EDO RAM (Two user accessible 144-pin SO DIMM slots. Expandable by user to 192MB.) The TransPort XKE comes 64MB of memory on the motherboard depending on how it is ordered. The amount of memory on the motherboard cannot be changed.
  - Phoenix BIOS that can be flash upgraded.
- Video display specifications:
  - 128 bit graphics accelerator
  - NeoMagic NM2160 video controller
  - Video memory 2MB EDO DRAM
  - Supports hardware MPEG
  - LCD screens:
    - 12.1" TFT SVGA LCD color display

      + 640x480 65,536 colors

      + 800x600 65,536 colors (Recommended setting)

      + 1024x768 256 colors

    - 13.3" TFT XGA LCD color display

      + 640x480 65,536 colors

      + 800x600 65,536 colors

      + 1024x768 256 colors (Recommended setting)

- External monitor:
  - 640x480 16,777,216 colors at 85Hz non-interlaced
  - 800x600 16,777,216 colors at 85Hz non-interlaced
  - 1024x768 65,536 colors at 75Hz non-interlaced
- Television output: The TransPort XKE can be used with televisions sets that accept National Television Standards Committee (NTSC) output or televisions sets that accept PAL output. The NTSC standard is used throughout North America while the PAL standard is used in many European countries.

Internal Bays

The TransPort XKE has two internal bays facing the front of the machine that are designed to hold modular peripherals or batteries. As you face the computer the left modular bay can hold a battery or floppy disk drive. The right modular bay can hold a battery, a CD-ROM drive, or a hard disk drive. If a peripheral is put in the wrong bay the computer does not recognize it. The

TransPort XKE has an internal hard disk drive. Putting a hard disk drive in the right modular bay allows you to have two hard disk drives in the computer at the same time.

Hard Disk Drives

The TransPort XKE uses a removable internal hard disk drive with an EIDE interface. Acceptable drives must have a 2.5-inch platter and be 19mm or less in height. Detailed specifications for the hard disk drives available with the TransPort XKE computer can be found by going to the TransPort XKE in the Micron Technical Support notebook section and then going to Hard Disk Drives. The hard disk drive is removable from the TransPort XKE by taking out one screw in the bottom of the case.

Floppy Disk Drive

The TransPort XKE has a modular 1.44MB 3.5-inch floppy drive that fits in the computer's left side internal modular bay.

CD-ROM Disk Drive

The TransPort XKE has a modular 5.25-inch CD-ROM drive that fits in the computer's right side internal modular bay. Detailed specifications for the CD-ROM drives available with the TransPort XKE computer can be found by going to the TransPort XKE in the Micron Technical Support notebook section and then going to CD-ROM Drives. The TransPort XKE CD-ROM drive can be used to play audio CDs without turning on the computer. When a headphone plug is inserted into the headphone jack on the CD-ROM player the CD-ROM player turns on but the rest of the computer remains off. Note the headphones must be inserted into the jack on the CD-ROM player. If the headphones are installed in the headphone jack on the back of the computer the CD-ROM player will not work unless the computer is turned on.

Built-in Modem

The TransPort XKE has a built-in 33.6 data/fax Motorola modem.

- Data mode: Full-duplex
- Fax mode: Half-duplex
- Interface: Enhanced 16550 serial port emulation
- Transmit level: -10dbm at modem (permissive RJ11/CA11 or equivalent jack)
- Receive level: Dynamic range -38 dbm
- Power: Average 200ma in active mode, 60ma in sleep mode
- Data Connect Rates:
    - Up to 56Kbps receive only (requires a software upgrade)

    - Up to 33.6Kbps transmit and receive
    - Auto fallback rate from 33,600 bps to 300bps
- Data standards conformance
- ITU-T:
    - V.34: 33,600-2400
    - V.32terbo: 19,200, 16,800 (TCM)
    - ITU:
    - V.32bis: 14,400, 12,000, 7200 (TCM)
    - V.32: 9600 (TCM), 4800 (QAM)
    - V.22bis: 2400 (QAM)
    - V.22: 1200 (DPSK)
    - V.21: 300 (FSK)
    - V.23: 600/75, 1200/75 (FSK)
    - Bell 212A: 1200 (DPSK)
    - Bell 103: 300 (FSK)
- Fax standards conformance:
- Compatibility interface EIA-578 (Asynchronous Facsimile Modem Control Standard, Service Class 1 and Class 2)
- ITU:
    - V.17: 14,400, 12,000, 9600, 7200, (TCM)
    - V.29: 9600 (QAM), 7200 (QAM)
    - V.27terbo: 4800 (DPSK), 2400 (DPSK)
    - V.21 Channel 2: 300 (FSK)
- Data compression: V.42bis and MNP5
- Error correction: V.42 (MNP2-4)
- Cellular error correction: Enhanced Throughput Cellular (ETC)
- Operating temperature: 32 to 122 degrees Fahrenheit / 0 to 50 degrees Celsius
- Operating humidity: 10% to 90% non-condensing
- Connector: Standard RJ-11 connector and cellular phone connector
- Voice modem: Supports independent speaker/mic positioning. Full duplex speakerphone, echo cancellation gain maximum supported via IS-101 AT+V commands and extensions.
- Voice mode capabilities: TIA/EIA IS-101 AT+V voice command set. U-law, A-law, and linear voice data compression. IMA ADPCM compression at 8.0KHz, 16-bit.

External Connectors

- Cellular phone connector

- Fax/telephone connector for the built-in modem
- Universal Serial Bus (USB) connector (series A connector)
- Composite video jack. An RCA type jack used to connect the computer to a television set.
- S-Video 5-pin connector used to connect the computer to a television set. The S-video connector has separate output for red, green, blue, horizontal and vertical signals. It generally provides better quality television output than the composite video jack.
- 15-pin female Game/MIDI port
- 1/8 inch monaural microphone jack
- 1/8 inch stereo line-out jack (accepts stereo headphones)
- 25-pin female Centronics-standard bi-directional parallel port ECP/EPP
- 9-pin male serial port RS-232C, 16550AF compatible
- 2-way Infrared port on front of computer (can be used as either a wireless parallel or serial port). Supports both IrDA-I and IrDA-II, also known as Fast Infrared, for transfer rates up to 4,000,000bps (4Mbps).
- 2-way Infrared port on rear of computer (can be used as either a wireless parallel or serial port). Supports both IrDA-I and IrDA-II, also known as Fast Infrared, for transfer rates up to 4,000,000bps (4Mbps).
- 6-pin female mini-DIN PS/2 connector for an external PS/2 mouse
- 6-pin female mini-DIN PS/2 connector for an external PS/2 keyboard
- 15-pin female external VGA/SVGA monitor
- Proprietary port replicator connector
- Two PC Card (PCMCIA) slots. See PC Card specifications below.
- Kensington Security lock slot

Keyboard

- 87-key keyboard with cursor control keys, embedded numeric key pad, and 12 function keys.
- Connector for external PS/2 keyboard
- Hot Keys
    - Fn+F2 Switches between the LCD screen, an external monitor, or both.
    - Fn+F3 Switches between the pointing devices. Either the touchpad or the pointing stick can be active.
    - Fn+F4 Switches between the front and rear infrared ports.
    - Fn+F5 Decreases the volume of the onboard stereo speakers
    - Fn+F6 Increases the volume of the onboard stereo speakers
    - Fn+F7 Decreases the display brightness
    - Fn+F8 Increases the display brightness

- Fn+F9 Puts the computer into suspend mode to save power. Pressing any key on the keyboard will take the machine out of suspend mode.
- Fn+F10 Undock. When the computer is in the port replicator pressing Fn+F10 will prepare the computer to be removed from the port replicator. After pressing Fn+F10 wait for the safe undock light to come on and then it is safe to remove the computer from the port replicator.
- Fn+F12 Internal PC speaker volume control. (Not to be confused with the two built-in speakers that run off the 16-bit sound card.) Volume can be set to high, medium, low, and off. The computer will give you an example beep at the set volume when you press the Fn+F12 keys.

Power Sources

Only use the Micron TransPort XKE power sources (AC adapter, batteries, and DC adapter) with the TransPort XKE notebook computer. Trying to use any other power adapter may damage the TransPort XKE notebook computer.

- AC adapter: The AC adapters supplied with the TransPort XKE notebook computer will switch voltages automatically when plugged into a 100 to 240 volt AC power source operating at a frequency of 50/60 Hz.
- Battery: Batteries are warm swappable. They can be changed while the computer is connected to an AC power source.
    - Smart Li-Ion Battery 5400 mAh
    - Battery status indicator built into the battery
    - Recharges in approximately 3.5 hours. When two batteries are installed in the computer the battery in the right modular bay will charge first and then the battery in the left modular bay will charge. The batteries are discharged in the reverse order. That is, the battery in the left bay will be discharged first and then the battery in the right bay will be discharged. To charge two batteries takes approximately seven hours.
- DC adapter for use in automobiles or airplanes

PC Card (Also Known as PCMCIA)

- TI PCI1131 PCI-to-PC Card controller
- Two PC Card slots. The slots will hold two Type I devices, or two Type II devices, or one Type III device. (A Type III device is so thick that when inserted into one slot it blocks the other slot.)
- Both slots are CardBus compatible
- Zoomed Video Support through the bottom PC Card slot

Pointing Devices

- Touchpad pointing device
- Stick pointing device
- Connector for external PS/2 mouse

Sound Specifications

- Built-in ESS1878 or ESS1879 sound controller (Sound Blaster 16 compatible)
- 16-bit stereo sound
- 1MB wavetable
- 32-voice FM synthesis
- 3D sound
- Two internal speakers 0.3 watts per channel
- Built-in monaural microphone
- Stereo line-out (allows use of stereo headphones)
- 15-pin female Game/MIDI port

Environmental Specifications

- Temperature
  - Powered on: 50 to 95 degrees Fahrenheit / 10 to 35 degrees Celsius
  - Powered off: 14 to 122 degrees Fahrenheit /-10 to 50 degrees Celsius
- Humidity
  - Powered on: 40 to 80 percent (no condensation)
  - Powered off: 40 to 80 percent (no condensation)

Dimensions and Weight

- TransPort XKE
  - 12.2 x 9.87 x 2.0 inches / 311 x 251 x 51 mm
  - 7.2lbs / 3240 grams (with one battery)
- TransPort XKE Lithium Ion Battery
  - 4.4 x 6.1 x 0.9 inches / 113 x 156 x 22 mm
  - 1.2lbs / 507 grams

Last Edited: 2-19-98

© 1998 Micron Electronics, Inc. All rights reserved.

E.1.2 Signal Conditioning Extensions for Instrumentation (SCXI) Chassis

Product	Description	Cat. PG.	P/N	Qty	Price
SCXI Modules and Chassis					
SCXI-1200	DAQ and Control Module	3-165	776783-00	1	$895
SCXI-1120	8-Ch. Isolation Amp Module	3-175	776572-20	1	$1,195
SCXI-1141	8-Ch. Ellip. Lowpass Filter	3-187	776572-41	1	$1,795
SCXI-1181	SCXI Breadboard Module	3-224	776572-81	1	$1,95
SCXI-1001	SCXI 12-Slot Chassis	3-205	776571-01	1	$1,595
SCXI-1126	Freq. to Voltage Converter	371	776572-26	1	$1,295
Terminal Blocks, Cabling, and Accessories					
SCXI-1327	Attenuator Term. Block	3-212	776573-27	1	$295
SCXI-1320	Terminal Block		776573-20	1	$150
SCXI-1352	8-Ch. Cable from 1120 Out.	3-212	776573-04	1	$35
SCXI-1300	Low-Voltage Terminal Block	3-212	776573-00	1	$185
SCXI-1302	Feed through Terminal Block	3-212	776573-02	1	$175
SCXI-1360	Front Filler Panel	3-222	776576-60	7	$84
SCXI-1361	Rear Filler Panel	3-222	776576-61	10	$100
SCXI-1370	12-Slot Rack-Mount Kit	3-222	776576-70	1	$50

SCXI Chassis

SCXI-1000, SCXI-1000DC, SCXI-1001

Chassis house all SCXI modules
Low-noise environment for signal conditioning
- *Shielded enclosure*
- *Low-noise power system*

Rugged, compact chassis
- *Forced air cooling*
- *Optional rack mounting*

Integrated instrumentation system
- *3 internal analog buses*
- *Timing bus circuitry for high-speed module multiplexing*
- *Trigger lines for intermodule timing signals*

AC, DC, or battery power options

NI-DAQ Software
Windows NT
Windows 95
Windows 3.1
Mac OS
DOS

Application Software
LabVIEW
BridgeVIEW
LabWindows/CVI
LabWindows
Measure
ComponentWorks
VirtualBench
Lookout

Overview

The SCXI-1000, SCXI-1000DC, and SCXI-1001 are rugged, low-noise chassis. The SCXI-1000 and SCXI-1000DC can house up to four modules; the SCXI-1001 can house 12 modules. You can also daisy chain up to eight SCXI chassis with a single MIO board for high channel count applications.

The SCXI-1000DC is a DC-powered chassis that is ideal for portable applications or where standard AC power is unavailable. The SCXI-1000DC is powered by any 9.5 to 16 VDC battery or power supply, the optional SCXI-1382 battery pack, or the optional SCXI-1383 power supply/float charger.

The SCXI-2000, a four-slot chassis with built-in RS-232 and RS-485 serial interface, is also available for remote systems. See page 391 for more information on the SCXI-2000 chassis.

Description

The SCXI-1000, SCXI-1000DC, and SCXI-1001 chassis integrate the operation of an assortment of SCXI modules. The SCXIbus in the backplane of the chassis includes guarded analog buses for signal routing and digital buses for transferring data and timing signals. For example, you can use a plug-in DAQ board or an SCXI-1200 module to scan and acquire signals from multiple SCXI signal conditioning modules. In this operation, the SCXI chassis uses its SCXIbus to synchronize the digitization of the conditioned analog signal with the multiplexing and signal routing from the SCXI modules.

The SCXI chassis, along with the SCXI modules, are serially programmed using digital I/O lines of the DAQ board or SCXI-1200 module. The DAQ board or module programs the control circuitry of the chassis with the number and order of modules and channels to scan. Therefore, using SCXI will reserve up to four digital output lines and one digital input line of your DAQ board or SCXI-1200 module. Alternatively, an SCXI-2400 RS-232/RS-485 communications module can directly program the chassis via the SCXIbus.

Chassis	Slots	Power
SCXI-1000	4	AC
SCXI-1000DC	4	DC
SCXI-1001	12	AC
SCXI-2000[1]	4	AC
PXI-1010[2]	4/8	AC

[1] *SCXI-2000 includes an RS-232/RS-485 communications interface–(see page 391)*
[2] *PXI-1010 includes 4 SCXI slots and eight PXI slots–(see page 395)*

Table1. SCXI Chassis Options

The SCXI-1000 and SCXI-1001 are available with a number of standard AC power options. The SCXI-1000DC can be powered with any 9.5 to 16 VDC power supply. Optionally, you can use the SCXI-1382 12 VDC battery pack, or the optional SCXI-1383 power supply/float charger to operate the chassis from an AC power outlet.

Accessories

DC Power Accessories

The SCXI-1382 is a 12 VDC, 25 Ah battery pack that attaches directly to the SCXI-1000DC chassis. The SCXI-1382 can power a fully loaded SCXI-1000DC chassis for a minimum of 5 hours. The SCXI-1382 also includes a dual-stage battery charger, which charges a completely discharged battery in 8 to 11 hours. The dual-stage charger cannot power the SCXI-1000DC chassis. The SCXI-1383 is a 13.8 VDC, 4 A power supply/float charger for the

SCXI-1000DC. The SCXI-1383 will power the SCXI-1000DC from 115 VAC or 230 VAC power when DC power is unavailable. You can also combine the SCXI-1382 and the SCXI-1383 to operate in standby mode and provide uninterruptible power for the SCXI-1000DC chassis.

Chassis Accessories

The following rack-mounting and panel mounting hardware, filler panels, and a chassis handle are available for the SCXI-1000, SCXI-1000DC, and SCXI-1001 chassis. *(See page 409 for more information.)*

Mounting Options

Rack-Mounting kit for

SCXI-1001 ..... SCXI-1370
SCXI-1000/1000DC SCXI-1371
two SCXI-1000/1000DC SCXI-1372

Panel-Mounting for

SCXI-1001,1000, 2000DC SCXI-1373

Chassis Handle *SCXI-1374*

Filler Panels

Front filler panel SCXI-1360
Rear filler panel SCXI-1361

Part Numbers

SCXI-1000 4-slot chassis
U.S. 120 VAC 776570-01
Swiss 220 VAC 776570-02
Australian 240 VAC 776570-03
Universal Euro 240 VAC 776570-04
No. American 240 VAC 776570-05
United Kingdom 240 VAC 776570-06
Japan 100 VAC 776570-07
SCXI-1000DC 4-slot chassis 776570-00
SCXI-1001 12-slot chassis
U.S. 120 VAC 776571-01
Swiss 220 VAC 776571-02
Australian 240 VAC 776571-03
Universal Euro 240 VAC 776571-04
No. American 240 VAC 776571-05
United Kingdom 240 VAC 776571-06
Japan 100 VAC 776571-07
SCXI-1382 battery pack
without charger 776577-820
with 115 VAC charger 776577-821*
SCXI-1383 power supply/float charger
U.S. 120 VAC/Japan 100 VAC 776577-831
Swiss 220 VAC 776577-832
Australian 240 VAC 776577-833
Universal Euro 240 VAC 776577-834
No. American 240 VAC 776577-835
United Kingdom 240 VAC 776577-836
SCXI-1360 front filler panel 776576-60
SCXI-1361 rear filler panel 776576-61
SCXI-1370 rack-mount kit
for SCXI-1001 776577-70
SCXI-1371 rack-mount kit
for SCXI-1000/1000DC 776577-71
SCXI-1372 rack-mount kit
for two SCXI-1000/1000DC 776577-72
SCXI-1373 panel-mount kit 776577-73
SCXI-1374 handle kit 776577-74

** With U.S. style three-prong power plug.*

Phone: (512) 794-0100 • Fax: (512) 794-8411 • info@natinst.com • www.natinst.com

SCXI Chassis

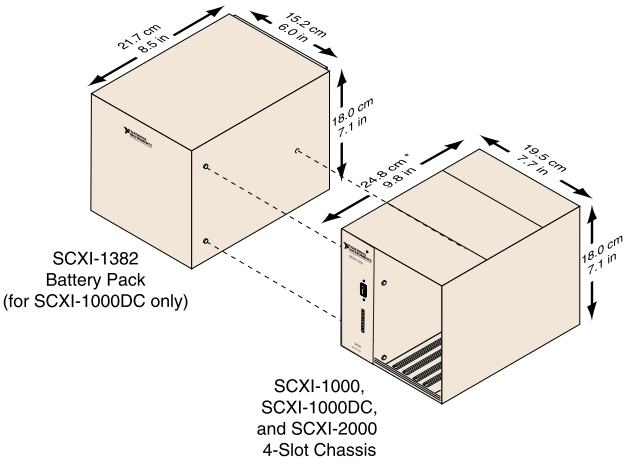

* SCXI terminal blocks mounted to front of chassis will add 7.5 cm to the depth dimension.

Figure 1. SCXI-1000, SCXI-1000DC, SCXI-2000, and Battery Pack Dimensions

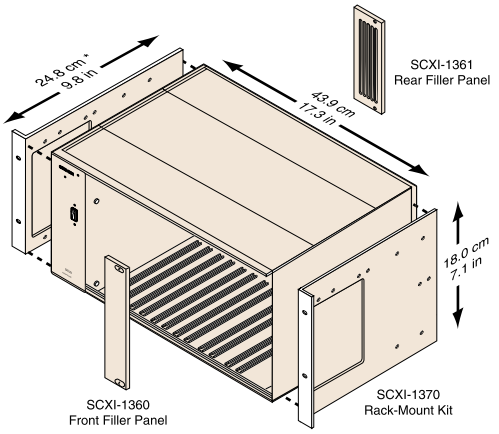

Figure 2. SCXI-1001 Dimensions

Figure 3. SCXI-1000DC, SCXI-1382 Battery Pack and SCXI-1374 Handle Accessory

Specifications

Typical for 25º C unless otherwise noted.

SCXI-1000, SCXI-1000DC, and SCXI-1001 Chassis

Power Requirements

Input voltage

SCXI-1000 and SCXI-1001	*100, 120, 220, or 240 VAC at 50 or 60 Hz*
SCXI-1000DC	*12 VDC nominal (9.5 to 16.0 VDC)*

Operating current, maximum

SCXI-1000	*0.6 A at 100 VAC*
	0.5 A at 120 VAC
	0.25 A at 220 or 240 VAC
SCXI-1000DC	*5.5 A (at 9.5 VDC)*
SCXI-1001	*1.25 A at 100 or 120 VAC*
	0.7 A at 220 or 240 VAC

Module power

+5 V	*50 mA per slot;*
+18.5 to +25.0 V	*170 mA per slot;*
-18.5 to -25.0 V	*170 mA per slot*

Physical

Dimensions (including fan)[1]

SCXI-1000 and SCXI-1000DC	*18.0 by 19.5 by 24.8 cm*
	(7.1 by 7.7 by 9.8 in.)
SCXI-1001	*18.0 by 43.9 by 24.8 cm*
	(7.1 by 17.3 by 9.8 in.)

Weight

SCXI-1000	*3.9 kg (8 lb 10 oz)*
SCXI-1000DC	*3.3 kg (7 lb 5 oz)*
SCXI-1001	*6.8 kg (14 lb 14 oz)*

SCXI-1382 Battery Pack

Battery output	*12 VDC, 25 Ah*
Battery type	*Sealed lead-acid*
Minimum run time	*5 h (with four SCXI modules)*
Recharge time	*8 to 11 h (with included charger)*
Input power connection	*3 screw terminals, or connector*
Dimensions	*18.0 by 15.2 by 21.7 cm*
	(7.1 by 6.0 by 8.5 in.)
Weight	*8.6 kg (19 lb)*

SCXI-1383

Output voltage	*13.8 VDC at 4 A load*
Input voltage	*115/230 VAC at 60/50 Hz*
Dimensions	*16.5 by 8.0 by 5.7 cm*
	(6.5 by 3.2 by 2.2 in.)

Environment (all products)

Operating temperature	*0º to 50º C (0º to 40º C for SCXI-1383)*
Relative humidity	*5% to 90% noncondensing*

Certifications and Compliances

CE Mark Compliance CE

This product meets applicable EU directive(s) as follows:

Safety isolation	*Low voltage directive EN 61010*
EMC Directive	
Immunity	*EN 50082-1:1994*
Emissions	*EN 55011:1991 Group I Class A at 10 m*

[1] *Dimensions do not include terminal block mounted to front of chassis, which will add 7.5 cm to depth*

DMU 6X:
Silicon Inertial Measurement Unit

- **X, Y, Z, Acceleration, Roll, Pitch, Yaw, Angular Rates**
- **DSP Processing Power**
- **Analog & Digital Output**
- **No Calibration Required**

The DMU 6X is an intelligent six axis measurement system designed for accurate acceleration and angle measurement in dynamic environments. The DMU 6X employs a high performance Digital Signal Processor to provide outputs that are compensated for deterministic error sources within the unit. Internal compensation includes offsets, scale factors, and alignment. All six of the DMU-6X sensor elements are micro-machined devices. The three angular rate sensors consist of vibrating plates that utilize the Coriolis force to output angular rate independently of acceleration. The three MEMS accelerometers are surface micro-machined silicon devices that use differential capacitance to sense acceleration. The DMU-6X has analog and two digital output modes that allow for easy integration. In **voltage mode**, the analog sensor signals are sampled and converted to digital data with 1mV resolution. In **scaled sensor mode**, the analog sensor signals are sampled, converted to digital data, compensated, and scaled to engineering units. Digital data may be requested via serial command or to be transferred continuously.

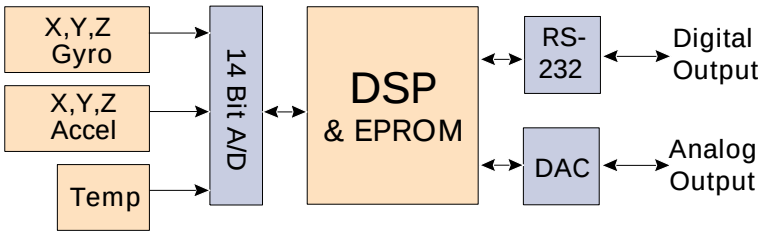

Figure 1. Block diagram of DMU-6X

DMU Products	Description	Output
DMU-6X	Direct digital voltage and signal conditioned analog outputs. Also outputs calibrated engineering units.	XYZ Acceleration 3 Axis Angular Rate
DMU-VGX	Tilt angle (roll/pitch) is computed. -6X outputs also included.	Roll & Pitch XYZ Acceleration 3 Axis Angular Rate
DMU-DG	XYZ Acceleration,3 Axis Angular Rate, 3 Axis Magnetometer	Roll, Pitch, Yaw
DMU-FOG	High accuracy tilt angle (roll/pitch) is computed. -6X outputs also included.	Roll & Pitch XYZ Acceleration 3 Axis Angular Rate

Table 1. Description of DMU Products

ORDERING INFORMATION

Part#		Price 1-9
BASE PART		
DMU-6X	Dynamic Measurement Unit	CALL

Note: Please specify the desired rate (50 - 150°/S) and acceleration (1-50 G) range when ordering.

Crossbow

408/324-4830 • FAX 408/324-4840 • www.xbow.com

DMU 6X:
Silicon Inertial Measurement Unit

DMU-6X Specifications

Performance	Gyro	Acceleration
Available Full Scale Ranges	±50, 100, 150° /S	±1, 2, 4, 10, 25, 50G
Full Scale Span (analog outputs)	±2.0V	±2.0
Full Scale Span (digital output)	-32,768 to 32,767	-32,768 to +32,767
Scale Factor Calibration	< 1 %	<1%
Bandwidth	DC - 10 Hz	DC - 100Hz
Linearity	0.5% of FS	0.2% of FS
Bias Stability (Room)	±1 °/sec	±70 mG
Bias Stability (-40 to 85)	±9 °/sec	<1°
Alignment (to enclosure)	<1°	
Resolution	0.05 °/sec	5 mG (FS < 8G), 50mG (FS > 8G)
Power		
Input Supply Voltage	8 - 30 VDC	
Input Supply Current	100 mA (max)	
Environmental		
Operating Temperature Range	-40 to 85°	
Storage Temperature Range	-55 to 85° C	
Package	Aluminum housing	
Weight	475 grams	
Mechanical Shock	1000 G (1 ms half sine wave)	
Vibration	10 G RMS	
Digital Data Output Rate		
Voltage Mode	166 Hz	
Scaled Sensor Mode	156 Hz	
Analog Mode	400 Hz	

	Voltage Mode 12 bit, unsigned	Scaled Sensor Mode 16 bit 2's compliment
0	Header (255)	Header (255)
1	Gyro Voltage X (MSB)	Roll Rate, X (MSB)
2	Gyro Voltage X (LSB)	Roll Rate, X (LSB)
3	Gyro Voltage Y (MSB)	Pitch Rate, Y (MSB)
4	Gyro Voltage Y (LSB)	Pitch Rate X (LSB)
5	Gyro Voltage Z (MSB)	Yaw Rate, Z (MSB)
6	Gyro Voltage Z (LSB)	Yaw Rate, Z (LSB)
7	Accelerometer Voltage X (MSB)	Acceleration X (MSB)
8	Accelerometer Voltage X (LSB)	Acceleration X (LSB)
9	Accelerometer Voltage Y(MSB)	Acceleration Y (MSB)
10	Accelerometer Voltage Y (LSB)	Acceleration Y (LSB)
11	Accelerometer Voltage Z (MSB)	Acceleration Z (MSB)
12	Accelerometer Voltage Z (LSB)	Acceleration Z (LSB)
13	Temp Sensor Voltage (MSB)	Temp Sensor Voltage
14	Temp Sensor Voltage (LSB)	(MSB)
15	Time (MSB)	Temp Sensor Voltage (LSB)
16	Time (LSB)	Time (MSB)
17	Checksum	Time (LSB)
18		Checksum

Data Packet Format (v1.2)

Development Software

Crossbow's X-View software is shipped with DMU products for use on PC's running MS Windows '95. X-View provides a convenient way to start system development, evaluate the performance of the DMU, and perform data acquisition. Download a free copy from our website.

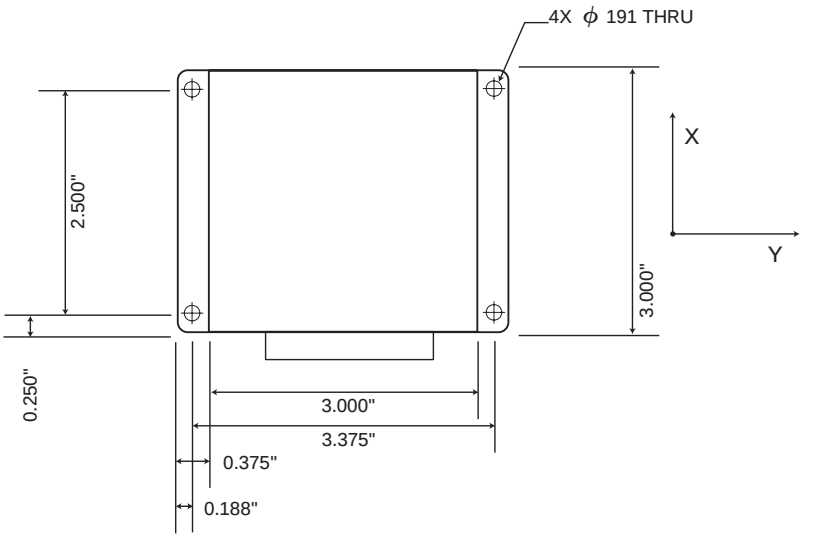

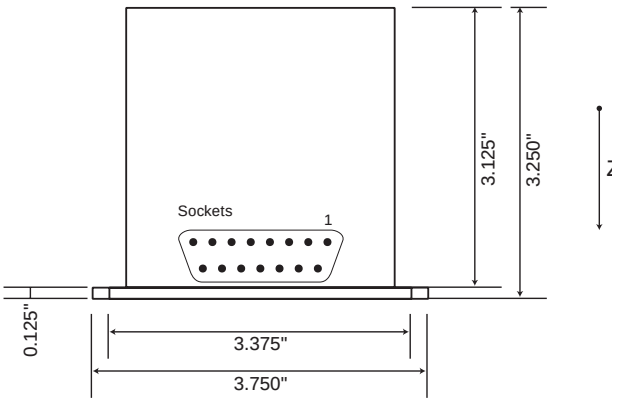

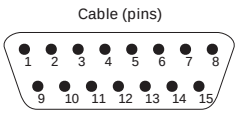

1	Transmit Data
2	Receive Data
3	Vcc
4	GND
5	X-axis Accelerometer Analog Voltage
6	Y-axis Accelerometer Analog Voltage
7	Z-axis Accelerometer Analog Voltage
8	Roll Rate Analog Voltage
9	Pitch Rate Analog Voltage
10	Yaw Rate Analog Voltage
11	Timing Pulse
12	Reset
13-15	GND/Unused

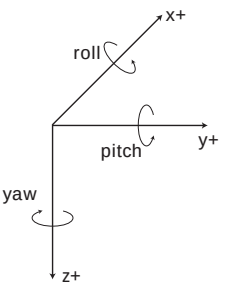

NovAtel's RT-2™ represents the pinnacle of high accuracy "real-time kinematic" (RTK) performance. Based on the 24 channel L1/L2 MiLLennium™ GPSCard, the RT-2 computes fixed integer carrier phase ambiguity estimates to deliver 2 cm accuracy in real-time. Fast and robust "on the fly" (OTF) initialization algorithms are employed to guarantee performance and ensure ease of use.

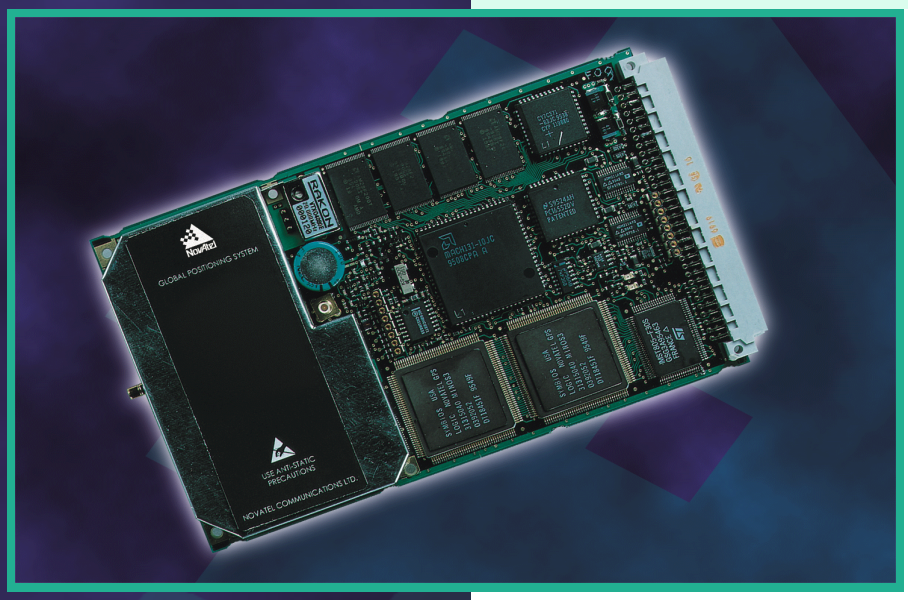

RT-2

NovAtel's RT-2 delivers high accuracy positions. Based on the MiLLennium GPSCard™, RT-2 applies the dual frequency advantage to deliver the most sophisticated RTK system available. Precision positioning based on fixed integer carrier phase ambiguity estimates provide nominal short baseline accuracy of two centimeters. Performance is extended to longer baseline applications through the use of dual frequency derived ionospheric corrections. Ease of use is guaranteed by fast and robust OTF initialization algorithms.

To address your integration requirements, RT-2's multiple hardware configurations provide you with the flexibility you need. Available modules include a single card OEM platform for embedded systems, and PowerPak™-II or ProPak®-II enclosures for standalone applications.

AT NOVATEL, OUR STRENGTH IN DEVELOPING PERFORMANCE GPS PRODUCTS IS MATCHED BY OUR COMMITMENT TO QUALITY CUSTOMER SERVICE.

WE WORK HARD TO RESEARCH AND DEVELOP GPS TECHNOLOGY WHICH WILL GIVE OUR CUSTOMERS THE COMPETITIVE ADVANTAGE IN BUSINESS. WHATEVER YOUR APPLICATION, YOU CAN COUNT ON NOVATEL'S WIDE RANGE OF PRODUCTS AND TECHNICAL SUPPORT TO BE YOUR SOURCE FOR ADVANCED GPS SOLUTIONS.

Applications

- Mining and Machine control
- Survey/GIS
- Robotics
- Flight inspection
- Agriculture
- Marine/Dredging
- High precision OEM

Advantages

- 24 channel "all in view" parallel tracking
- L1-C/A code and L2-P code measurements
- L1 and L2 full wave carrier measurements
- Narrow Correlator® technology
- P-code tracking through Antispoofing (AS)
- 2 cm RTK accuracy
- High data output rates
- Low data latency
- Accurate and robust L1/L2 RTK with OTF
- Modest differential data link requirements
- RTCM message types 18, 19, 20 and 21
- Ionospherically corrected positions
- High dynamics
- Ease of use
- OEM or standalone configurations
- Flexible integration
- Upgradable

RT-2

NovAtel Inc.

1120 68th Avenue N.E.

Calgary, Alberta, Canada

T2E 8S5

1-800-280-2242
in U.S. & Canada or
(403) 295-4900

Fax: (403) 295-4901

Internet: http://www.novatel.ca
E-mail: gps@novatel.ca

Features

- 2 cm real-time kinematic (RTK) accuracy with "on the fly" (OTF) initialization
- L1-C/A code and carrier tracking
- L2-P card and full wavelength carrier tracking
- 24 channel "all in view" parallel tracking
- fast reacquisition
- patented Narrow Correlator technology
- 5 or 10 MHz external oscillator input
- 4 Hz position output rate
- 4 Hz raw data output rate
- 1 PPS output
- event marker
- RTCM SC104 v 2.1/2.2
- RTCA SC159
- RINEX v 2.0
- NMEA 0183 v 2.0
- GPSolution™ - Windows® compatible GUI

Specifications[1]

- position accuracy[2]
  - stand alone
    - SA off: 15 m CEP
    - SA on: 40 m CEP
  - differential
    - code (L1, C/A): 0.75 m CEP
    - RT-2[3]: 0.02 m CEP
- time to first fix
  - cold start: 70 s (typical)
- reacquisition
  - warm start: 3 s L1, 10 s L2 (typical)
- data rates
  - measurements: 4 Hz
  - position: 4 Hz
- time accuracy
  - SA off: 50 ns RMS
  - SA on: 250 ns RMS
- velocity accuracy
  - stand alone: 0.20 m/s RMS
  - differential: 0.03 m/s RMS
- measurement precision
  - C/A code: 10 cm RMS
  - L2 P code: 40 cm RMS
  - L1 carrier phase
    - single channel: 3 mm RMS
    - differential channel: 0.75 mm RMS
  - L2 carrier phase
    - single channel: 5 mm RMS
    - differential channel: 4 mm RMS
- dynamics
  - acceleration: 6 g
  - velocity[4]: 515 m/s

OEMCard RT-2

- physical (Eurocard)
  - size: 17.7 cm x 10.0 cm x 1.7 cm
  - weight: 175 g
- temperature
  - operating: -40°C to +85°C
  - storage: -45°C to +95°C
- humidity: 95% non-condensing
- interface
  - dual RS232: 300 to 115.2 Kbaud
  - strobe I/0: TTL level
  - external clock: 5 or 10 MHz
- connector type
  - edge: 64 pin 0.1 " DIN 41612 type B
  - antenna: SMB male
  - external clock: SMB male
- input voltage: +5 VDC
- power consumption: 8 watts

PowerPak II RT-2

- physical
  - size: 21.0 cm x 11.1 cm x 4.7 cm
  - weight: 980 g
- temperature
  - operating: -40°C to +60°C
  - storage: -40°C to +85°C
- humidity: 95% non-condensing
- interface
  - dual RS232: 300 to 115.2 Kbaud
  - strobe I/0: TTL level
  - external clock: 5 or 10 MHz
- connector type
  - communications: DE9P
  - strobes I/O: DE9S
  - antenna: TNC female
  - power: 2.1 mm threaded plug
  - external clock: SMB male
- input voltage: 10-36 VDC
- power consumption: 11 watts
- accessories include
  - RS232 "Y" type null modem cable
  - automotive power cable
- optional accessories
  - 110/220 Volt AC adapter

ProPak II RT-2

- physical
  - size: 25.1 cm x 13.0 cm x 6.2 cm
  - weight: 1.3 Kg
- temperature
  - operating: -40°C to +55°C
  - storage: -40°C to +85°C
- humidity: 95% non-condensing
- interface
  - dual RS232: 300 to 115.2 Kbaud
  - strobe I/0: TTL level
- connector type
  - communications: 10 pin LEMO
  - strobes I/O: 8 pin LEMO
  - antenna: TNC female
  - power: 4 pin LEMO
- input voltage: 10-36 VDC
- power consumption: 12 watts
- accessories included
  - RS232 null modem and straight cable
  - strobe I/O cable
  - automotive power cable
- optional accessories
  - 110/220 Volt AC adapter

Typical Performance

RT-2 Accuracy vs. Convergence Time

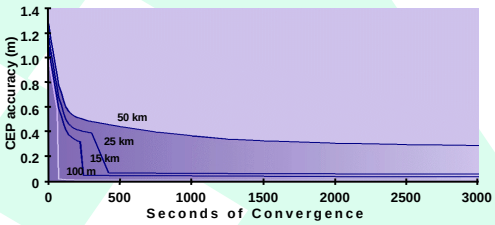

For detailed product technical specifications, please call NovAtel's GPS Hotline (403) 295-4900.

1. *Specifications are subject to change without notice. Performance specifications are subject to GPS system characteristics & U.S. DOD operational degradation.*
2. *Accuracy is dependent upon ionospheric and tropospheric conditions, satellite geometry, baseline length and multipath effects.*
3. *See Typical Performance charts above.*
4. *Export licensing restricts operation to 60,000 feet maximum and 1,000 nautical miles/hour maximum.*

Windows® is a registered trademark of Microsoft Corporation.

Printed in Canada

NovAtel's family of GPS products includes the Performance Series – a range of advanced technology, high performance L1 GPSCards. These 12 channel "all in view" receivers feature NovAtel's patented Narrow Correlator® technology which provide sub-meter differential accuracy in real-time. High data output rates, fast signal reacquisition, and superior multipath mitigation techniques are designed to support even the most demanding GPS applications. Performance Series products are available in Eurocard, PC-Card and standalone configurations to provide flexible integration options.

AT NOVATEL, OUR STRENGTH IN DEVELOPING PERFORMANCE GPS PRODUCTS IS MATCHED BY OUR COMMITMENT TO QUALITY CUSTOMER SERVICE.

WE WORK HARD TO RESEARCH AND DEVELOP GPS TECHNOLOGY WHICH WILL GIVE OUR CUSTOMERS THE COMPETITIVE ADVANTAGE IN BUSINESS. WHATEVER YOUR APPLICATION, YOU CAN COUNT ON NOVATEL'S WIDE RANGE OF PRODUCTS AND TECHNICAL SUPPORT TO BE YOUR SOURCE FOR ADVANCED GPS SOLUTIONS.

Performance Series

NovAtel's PC Performance 3900 Series features a 2/3 length personal computer card designed for installation in PC compatible computers. This series offers a choice of two full DGPS Card models – the 12 channel 3911R, providing core functionality common to all GPSCard™ models, and the full data model 3951R.

NovAtel's OEM Performance 3100 Series features a Eurocard form-factor designed for standalone and embedded applications. This series offers a selection of GPSCard models ranging from the 12 channel 3111R, providing core functionality, to the advanced full data model 3151R. All OEM Performance Series receivers are DGPS capable and are rated for use at –40ºC to +85ºC temperatures. Available as a software option is NovAtel's Multipath Elimination Technology (MET®) which reduces pseudorange multipath error by a further 25% to 50% over NovAtel's existing multipath resistant Narrow Correlator.

NovAtel's PowerPak™ Performance 3100 Series provides GPS integrators with an effective, self-contained system. Each PowerPak includes an OEM Performance Series GPSCard and a power supply.

NovAtel ProPak® Performance 3100 Series provides a rugged water, shock and vibration resistant housing for outdoor applications which provides all the same functionality of PowerPak.

Applications

- DGPS Reference Station
- RT-20™ Reference Station
- Flight inspection
- Photogrammetry
- Survey/GIS
- Marine navigation
- High dynamics OEM

Advantages

- 12 channel "all in view" parallel tracking
- L1-C/A code and carrier measurements
- Narrow Correlator technology
- Multipath Elimination Technology (MET)
- Sub-meter real-time DGPS accuracy
- High data output rates
- Low data latency
- High dynamics
- Ease of use
- OEM, PC-Card, or standalone configurations
- Flexible integration
- Upgradable

Performance Series

NovAtel Inc.

1120 68th Avenue N.E.

Calgary, Alberta, Canada

T2E 8S5

1-800-280-2242
in U.S. & Canada or
(403) 295-4900

Fax: (403) 295-4901

Internet: http://www.novatel.ca
E-mail: gps@novatel.ca

Features

- 1 meter real-time differential accuracy
- L1-C/A code and carrier tracking
- 12 channel "all in view" parallel tracking
- fast reacquisition
- patented Narrow Correlator technology
- optional Multipath Elimination Technology (MET)
- 10 Hz position output rate
- 20 Hz raw data output rate
- 1 PPS output
- event marker
- RTCM SC104 v 2.1/2.2
- RTCA SC159
- RINEX v 2.0
- NMEA 0183 v 2.0
- GPSolution™ - Windows® compatible GUI

Specifications[1]

- position accuracy[2]
  - stand alone
    - SA off: 15 m CEP
    - SA on: 40 m CEP
  - differential: 0.75 m CEP
- time to first fix
  - cold start: 70 s (typical)
- reacquisition
  - warm start: 3 s (typical)
- data rates
  - raw measurements: 20 Hz
  - computed position: 10 Hz
- time accuracy
  - SA off: 50 ns RMS
  - SA on: 250 ns RMS
- velocity accuracy
  - stand alone: 0.20 m/s RMS
  - differential: 0.03 m/s RMS
- measurement precision
  - C/A code phase: 10 cm RMS
  - Carrier phase
    - single channel: 3 mm RMS
    - differential channel: 0.75 mm RMS
- dynamics (OEM Card Series only)
  - acceleration: 4 g
  - velocity[3]: 515 m/s

PC Card 3900 Series

- physical
  - size: 21.6 cm x 10.7 cm x 1.9 cm
  - weight: 220 g
- temperature
  - operating: 0°C to +70°C
  - storage: -40°C to +85°C
- interface
  - PC ISA bus: 8 bit/8 MHz
  - dual RS232 ports
    - connectors: DB-9 male
    - baud rates: 300 to 115.2 Kbaud
  - TTL Strobes I/O: DB-9 female
  - RF input: SMA female
- power consumption: 6 watts

OEM Card 3100 Series

- physical (Eurocard)
  - size: 16.7 cm x 10.0 cm x 1.5 cm
  - weight: 175 g
- temperature
  - operating: -40°C to +85°C
  - storage: -40°C to +85°C
- humidity: 95% non-condensing
- interface
  - types: RS232/RS422/NMEA
  - baud rates: 300 to 115.2 Kbaud
  - strobe I/0: TTL level
- connector type
  - edge: 64 pin 0.1 " DIN 41612 type B
  - antenna: SMB male
- input voltage range: 5 VDC, ± 12 VDC
- power consumption: 5 watts

PowerPak 3100 Series

- physical
  - size: 20.8 cm x 11.1 cm x 4.7 cm
  - weight: 1 Kg
- temperature
  - operating: -40°C to +65°C
  - storage: -40°C to +85°C
- humidity: 95% non-condensing
- interface
  - communications: RS232/RS422/NMEA
  - baud rate: 300 to 115.2 Kbaud
  - strobe I/0: TTL level
- connector type
  - communications: 2 x DB9P
  - strobes I/O: DB9S
  - antenna: TNC female
  - power: 2.1 mm threaded plug (center +)
- input voltage range: 10-36 VDC
- power consumption: 8 watts
- accessories include
  - RS232 "Y" type null modem cable
  - automotive power cable
- optional accessories
  - 110/220 Volt AC adapter

ProPak 3100 Series

- physical
  - size: 24.5 cm x 13.0 cm x 6.2 cm
  - weight: 1.2 Kg
- temperature
  - operating: -40°C to +65°C
  - storage: -40°C to +85°C
- humidity: 95% non-condensing
- interface
  - communications: RS232
  - baud rate: 300 to 115.2 Kbaud
  - strobe I/0: TTL level
- connector type
  - communications: 2 x 10 pin LEMO
  - strobes I/O: 8 pin LEMO
  - antenna: TNC female
  - power: 4 pin LEMO
- input voltage range: 10-36 VDC
- power consumption: 8 watts
- accessories include
  - RS232 null modem and straight cable
  - strobe I/O cable
  - automotive power cable
- optional accessories
  - 110/220 Volt AC adapter

For detailed product technical specifications, please call NovAtel's GPS Hotline (403) 295-4900.

1. *Specifications are subject to change without notice. Performance specifications are subject to GPS system characteristics & U.S. DOD operational degradation.*
2. *Accuracy is dependent upon ionospheric and tropospheric conditions, satellite geometry, baseline length and multipath effects.*
3. *Export licensing restricts operation to 60,000 feet maximum and 1,000 nautical miles/hour maximum.*

Windows® is a registered trademark of Microsoft Corporation.
Printed in Canada

E.2 Public Road Test Routes

Table E-7 and Table E-8 describe the public road routes used to compare the objective test procedures with performance during typical driving. This supports Section 7.4.4. in Chapter 7. The tables include the miles traveled for each segment. The road type is designated as follows:

RI – Rural Interstate
RA – Rural Arterial
RL – Rural Local
UI – Urban Interstate
UA – Urban Arterial
UL – Urban Local

Table E-7 Nighttime Route for Public Road Validation of Test Methodology

	Road Type (and miles)					
NIGHT ROUTE	**RI**	**RA**	**RL**	**UI**	**UA**	**UL**
Start at end of ramp from M-5 south onto I-96 west						
I 96 west to Milford Road North	8.75					
Milford Road N. to GM Road East		4.2				
GM Road East to South Hill South (missed South Hill at first – made U-turn)			.48			
South Hill South to Buno East			2.23			
Buno E. to Old Plank North			.78			
Old Plank North to Oakland West			2.0			
Oakland West to River North			.5			
River North to Atlantic East			.3			
Atlantic East to Wixom Road South			.7			
Wixom Road South to Grand River East		7.8				
Grand River East to Shiawassee East					7.5	
Shiawasee East to Farmington Road North						.7
Farmington Road North to Ten Mile East						.35
Ten Mile East to Power South						.35
Power South to Grand River West (dogleg at Shiawassee)						.9
Grand River West to Farmington Road South						.52
Farmington Road South to Nine Mile East						.52
Folsom East (past Orchard Lake) to Base Line (Folsom turns south to become Randall)						1.79
Base Line East to Middlebelt Road North					.78	
Middlebelt Road North to Eleven Mile East					2.93	
Eleven Mile East to Franklin Road South					2.3	
Franklin Road South to Swanson East					.2	
Swanson East to Telegraph North					.1	

	Road Type (and miles)					
NIGHT ROUTE	**RI**	**RA**	**RL**	**UI**	**UA**	**UL**
Telegraph North to 696 West					.35	
I-696 West to Connector M-5 exit (12 mile road)				6.7		
End at end of ramp from M-5 to 12 mile road						
Total mileage for each road type:	**8.75**	**12.0**	**6.99**	**6.7**	**14.2**	**5.13**
Total Miles Night Drive:	**53.7**					

Table E-8 Daytime Route for Public Road Validation of Test Methodology

	Road Type					
DAY ROUTE	**RI**	**RA**	**RL**	**UI**	**UA**	**UL**
Start at end of ramp from M-5 south onto I-96 west						
I 96 West to Kensington Road North	11.9					
Kensington Road North to Pleasant Valley North (we took a wrong turn at Muir; U-turn back to Kensington Road)		2.2				
Pleasant Valley North to M-59 West		5.5				
M-59 West to Argentine Road South		5.7				
Argentine Road South to Golf Club West			2.0			
Golf Club West to Hughes South			.9			
Hughes South to Grand River East			2.3			
Grand River East to Hubert Road South		1.0				
Hubert Road South to Crooked Lake East (Herb Str.)			.7			
Crooked Lake East (Herb Str.) to Grand River East			1.0			
Grand River East to I 96 East		.6				
I 96 East to Hwy 23 South	2.3					
Hwy 23 South to Silver Lake Road East	2.4					
Silver Road South to Marshall Road South		1.25				
Marshall Road S. (becomes Spencer) to N. Territorial East			5.8			
N. Territorial East to Beck North		10.3				
Beck North to Eight Mile West		2.9				
Eight Mile West to Napier North		1.9				
Napier North to Nine Mile West			.9			
Nine Mile West to Griswold North			3.75			
Griswold North to Ten Mile West			.9			
Ten Mile West to Martindale North (short dogleg)			.3			
Martindale North to Grand River East			3.6			
Grand River East to Telegraph Road South					18.4	
Telegraph Road South to Michigan Avenue East					7.8	
Michigan Avenue East to Woodward South					11.0	

	Road Type					
DAY ROUTE	**RI**	**RA**	**RL**	**UI**	**UA**	**UL**
Woodward South to Jefferson South (Rt. Turn)						.22
Jefferson Ave. becomes Lodge (10) North; Lodge North to Clairmont Exit				5.0		
Hamilton North to Calvert West						.9
Calvert West to Byron North						.3
Byron North (doglag to Lincoln) to Sturtevant East						.7
Sturtevant East to Hamilton North						.08
Hamilton N. to Seven Mile Road West						2.88
Seven Mile Road West to Strathcona Northeast						.6
Strathcona Northeast to Woodward South						3.1
Woodward South to W. Grand Blvd. East (MI turn)					5.25	
W. Grand Blvd East to John R. South					.1	
John R. South to Warren Avenue West						1.0
Warren Avenue West to Trumbull South					.9	
Trumbull South to Alexandrine Southwest						.4
Alexandrine to Grand River West (Mulberry Selden)						.17
Grand River West to 14th Street Southeast						.35
14th Street Southeast to M. L. King Blvd. SW (?)						.52
M. L. King Blvd. SW to I 96 West						.44
I 96 West to I 94 East				1.05		
I 94 East to Van Dyke North				4.64		
Van Dyke North to Miller West					.31	
Miller West to Mt. Elliot Avenue North (Mt. Elliott turns into Mound)						.70
Mound North to I 696 West					6.86	
I 696 West to Woodward/Main				4.5		
Main North to Vinsetta Southeast						2.4
Vinsetta Southeast to Catalpa (cross Crooks, 12 Mile, & 2 Mich. Turns on Woodward)						1.5
Catalpa East to Washington South						.9
Washington South to Eleven Mile West						.5
Eleven Mile West to Woodward South					.5	
Woodward South to I 696 West					1.2	
I 696 West to Connector 5 exit (Twelve Mile & Haggerty)				14.2		
Twelve Mile East to Haggerty					.4	
End at intersection of 12 Mile and Haggerty						
Total mileage each road type:	**16.6**	**31.3**	**22.1**	**29.4**	**52.9**	**17.6**
Total miles daytime drive:	**170**					

E.3 Analysis of Uncertainty in Determining FCW Compliance with a Closing Speed-dependent Minimum Warning Range Requirement

E.3.1 Introduction

The following analysis was used to help select instrumentation for vehicle testing that was done to support the validation of the objective test methodology. For the alert onset timing requirements assumed at the time of testing, the analysis verified that the selected instrumentation would provide the ability to distinguish whether or not a FCW system issued an alert too soon or too late.

Chapter 7 (Section 7.2.2) specifies the following 3-sigma error on the ability to compare the FCW's warning range with the requirement on the warning range:

> Measure error between minimum allowed range of alert onset, and actual range at alert onset, to 5% of the min alert range, or 2.0m, whichever is larger.

The analysis in this section considers the possible error sources, assumes random process models for the sources, and estimates the resulting uncertainty in determining an FCW alert's timeliness. This analysis assumed that the requirement on minimum warning range depended only on the closing speed – the difference in speeds as a following vehicle approaches a slower-moving lead vehicle. **Therefore, to select instrumentation for the test procedures recommended in this final report, the analysis in this section would need to be updated, using the new statements about required alert onset timing (Chapter 4, Section 4.2).** This revised analysis would be similar to that reported here, but with a different expression used for the minimum required warning range.

E.3.2 The Performance Metric and its Error Sources

Let R denote the true range at onset of alert, and let R_{warn} denote the minimum required range for an alert, which depends on difference between the two vehicles' speeds: $\Delta V = V_{pov} - V_{sv}$. Then metrics of the FCW unit's compliance with the Task 3 minimum warning range requirements are based on the difference, ε_R, between the actual range and the minimum required range :

$$\varepsilon_R = R - R_{warn} \ .$$

where R_{warn} is the minimum required range for an alert, from Task 3, using constants a and RT:

$$R_{warn} = -\Delta V \cdot RT - \frac{\Delta V^2}{2a}$$

where Task 3 specifies the parameters as:

$$(RT, a) = \begin{cases} (1.5\text{sec}, -0.5\text{g}), & \text{imminent crash alert} \\ (2.5\text{sec}, -0.3\text{g}), & \text{cautionary crash alert} \end{cases}$$

Consider errors in the computation of the metric ε_R that result from errors in measuring four variables:

R true range;

ΔV the range rate between the two vehicles, as defined above,

$\ddot{R}$ the relative acceleration of the POV away from the SV,

T_A the delay between the presentation of the alert to the driver and the moment at which the alert is logged into the data acquisition system.

Assume that the errors in measuring these variables are each zero-mean, independent errors with variances denoted by, for instance, $\sigma^2(\Delta V)$ for the variable ΔV. Then the three-sigma error in the computed value of the metric, denoted $\hat{\varepsilon}_R$, is a function of these three errors, as follows:

$$3\sigma(\hat{\varepsilon}_R) = \sqrt{\left(\frac{\partial \hat{\varepsilon}_R}{\partial R}\right)^2 \cdot 3\sigma^2(R) + \left(\frac{\partial \hat{\varepsilon}_R}{\partial \Delta V}\right)^2 \cdot 3\sigma^2(\Delta V) + \left(\frac{\partial \hat{\varepsilon}_R}{\partial \ddot{R}}\right)^2 \cdot 3\sigma^2(\ddot{R}) + \left(\frac{\partial \hat{\varepsilon}_R}{\partial T_A}\right)^2 \cdot 3\sigma^2(T_A)}$$

where $3\hat{\sigma}(\varepsilon_R)$ is required by Section E.3.1 to be no greater than 5% of the warning range, or 2.0m, whichever is greater.

E.3.3 The Metric ε_R as a Function of the Four Variables

The metric is the difference between the range at the alert time, and the minimum range required at onset of the alert. Errors in the computed metric, $\hat{\varepsilon}_R$, come from two sources. First, measurements of range and range rate include measurement errors. Second, in general, the alert will not occur at the same instant that measurements of the subject vehicle's motion are collected. Thus, to compute the required minimum range at the instant of the alert, vehicle speed and range at the alert time must be estimated by propagating motion over a short time interval. The time of the alert, however, is not known exactly, and so the metric is in error. An expression for the metric that includes these two error sources is now developed.

Figure E-1 shows a timeline of events near the instant of an alert. Times t_A and $\bar{t}$ are the instants at which, respectively, the alert occurs and the vehicle motion measurements are collected. Vehicle motion measurements are range, $R(\bar{t})$, range rate $\Delta V(\bar{t})$, and relative acceleration between the vehicles, $\ddot{R}(\bar{t})$. The exact moment of the FCW alert is not known – it is assumed to be at time $\bar{t} - T_A$, but there is an uncertainty of $d(T_A)$. This uncertainty is quite

small – perhaps 10 to 100 milliseconds – and is due to delays and finite sampling times both inside and outside the FCW unit under test.

The actual metric of the warning range performance is ε_R evaluated at time t_A, or $\varepsilon_R(t_A)$. Since time t_A is not known, the estimate of this metric, $\hat{\varepsilon}_R$, is computed by assuming that the alert occurs at time $\bar{t} - T_A$:

$$\hat{\varepsilon}_R = \varepsilon_R(\bar{t} - T_A) \ .$$

Then

$$\hat{\varepsilon}_R = R(\bar{t} - T_A) - R_{warn}(\bar{t} - T_A)$$

Assume that the actual relative acceleration between the two vehicles is constant during the interval under consideration. Then vehicle motion variables at the expected time of the alert are:

$$R(\bar{t} - T_A) = R(\bar{t}) - \Delta V(\bar{t}) \cdot T_A - \ddot{R}(\bar{t}) \cdot \frac{1}{2} T_A^2$$

$$\Delta V(\bar{t} - T_A) = \Delta V(\bar{t}) - \ddot{R}(\bar{t}) \cdot T_A \ .$$

The estimate of the metric is then:

$$\hat{\varepsilon}_R = R(\bar{t}) - \Delta V(\bar{t}) \cdot T_A - \ddot{R}(\bar{t}) \cdot \frac{T_A^2}{2} + \left(\Delta V(\bar{t}) - \ddot{R}(\bar{t}) \cdot T_A\right) \cdot RT + \frac{1}{2a}\left(\Delta V(\bar{t}) - \ddot{R}(\bar{t}) \cdot T_A\right)^2$$

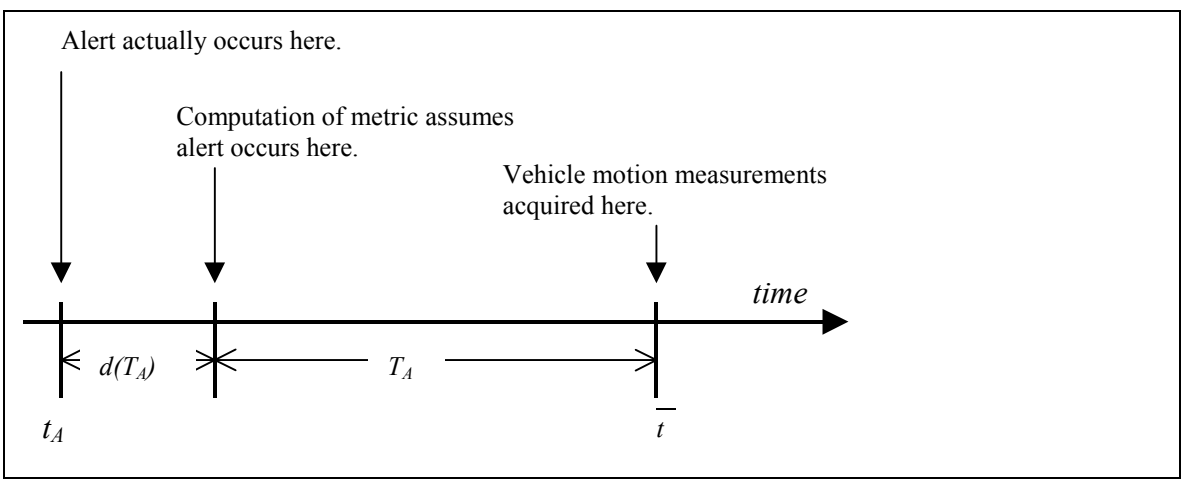

Figure E-1 Timeline of Events Near a Crash Alert

E.3.4 Partial Derivatives of the Metric

The partial derivatives of the computed metric $\hat{\varepsilon}_R$, taken with respect to the four variables, are shown in Table E-9.

Table E-9 Partial Derivatives of The Warning Range Performance Metric

$$\frac{\partial \hat{\varepsilon}_R}{\partial R} = 1$$

$$\frac{\partial \hat{\varepsilon}_R}{\partial \Delta V} = RT + \frac{\Delta V}{a} - T_A\left(1 + \frac{\ddot{R}}{a}\right)$$

$$\frac{\partial \hat{\varepsilon}_R}{\partial \ddot{R}} = -T_A\left(-\frac{1}{2}T_A + RT\right) - T_A\left(\frac{\Delta V}{a}\right) + T_A^2\left(\frac{\ddot{R}}{a}\right)$$

$$\frac{\partial \varepsilon_R}{\partial T_A} = -\ddot{R}(T_A + RT) + (\ddot{R})^2\left(\frac{T_A}{a}\right) - \Delta V\left(1 + \frac{\ddot{R}}{a}\right)$$

Thus the error in evaluating the FCW's warning range performance, relative to the minimum alert range, depends on the following variables: the warning algorithm parameters, the relative speed and relative acceleration between the two vehicles, and the delay between the alert and the acquisition of data. It is independent of the true range itself. Because this error depends on these quantities, it will be necessary to verify that the requirement on the accuracy of the metric is met throughout the space of these variables.

E.3.5 Uncertainties in the Four Variables

Consider uncertainties in knowledge of the four variables, as shown in the table below. These values reflect the use of DGPS units on each vehicle (NovAtel Millenium RT-2). The range and range rate specifications for this unit are, respectively, 0.06m and 0.09m/sec 3-sigma. An easily obtainable spec for longitudinal accelerations is 0.10m/sec^2, or 0.01G. The time of the alert is given by the FCW units under test – a likely delay is 0.10 sec with an uncertainty of between 10 and 50 msec, based on discussions with the vendors. These numbers are shown in Table E-10 below.

Table E-10 Uncertainties in the Four Measured Variables

Variable	Uncertainty (3sigma)
R	0.06m
ΔV	0.09m/s
$\ddot{R}$	0.1m/s/s
T_A	0.050 sec

E.3.6 Computing Uncertainty in the Error Metric

The 3-sigma uncertainty in the computed metric $\hat{\varepsilon}_R$ is computed for nine crash scenario situations, using measurement uncertainties (Table E-10). Nine situations are used to verify that the uncertainty in the metric satisfies the requirement given in Chapter 7 (and at the top of this section) across all possible combinations of range rate, relative acceleration, and delay between alert and data logging, as stated earlier. Eight of the nine situations are the $2^3 = 8$ possible combinations of the minimum and maximum values likely to occur for each of the three variables. The ninth provides additional insight.

Consider first the cautionary crash alert. Table E-11shows results of computing the minimum required warning range and the 3-sigma error for the performance metric for nine different crash scenarios, using the uncertainties from Table E-10. The shaded rows show those cases for which the 3 sigma error is larger than 5% of the minimum required range. Note that all of these shaded rows have less than 2.0m of error, so that with these uncertainties, the requirement on the performance metric can be satisfied.

Table E-12 shows results of similar computations, except with the imminent crash alert parameter settings used. Again, the shaded rows indicate crash scenarios in which the 3-sigma error in the warning range metric exceeds 5% of the minimum required warning range. Because none of these values are greater than 2.0m, the requirement on the performance metric is satisfied.

Table E-11 Error in the Warning Range Performance Metric for Nine Crash Scenario Conditions

Independent 3 sigma errors assumed
R = 0.06*sqrt(2) m
ΔV = 0.09*sqrt(2) m/sec
$\ddot{R}$ = 0.10 m/sec^2
T_A = 0.050 sec
Cautionary crash alert assumed

State	Warning Range (m)	3sigma of metric (m)	Ratio 3sig /Warn Range
ΔV = -5 m/sec $\ddot{R}$ = 0 m/sec^2 T_A = 0.10 sec	16.8	0.61	3.64%
ΔV = -27 m/sec $\ddot{R}$ = 0 m/sec^2 T_A = 0.10 sec	100	2.02	2.02%
ΔV = -27 m/sec $\ddot{R}$ = -3 m/sec^2 T_A = 0.10 sec	100	3.44	3.44%
ΔV = -5 m/sec $\ddot{R}$ = -3 m/sec^2 T_A = 0.10 sec	16.8	1.03	6.17%
ΔV = -5 m/sec $\ddot{R}$ = 0 m/sec^2 T_A = 0.25 sec	16.8	0.63	3.79%
ΔV = -27 m/sec $\ddot{R}$ = 0 m/sec^2 T_A = 0.25 sec	100	2.06	2.06%
ΔV = -27 m/sec $\ddot{R}$ = -3 m/sec^2 T_A = 0.25 sec	100	3.45	3.45%
ΔV = -5 m/sec $\ddot{R}$ = -3 m/sec^2 T_A = 0.25 sec	16.8	1.04	6.19%
ΔV = -15 m/sec $\ddot{R}$ = -3 m/sec^2 T_A = 0.25 sec	75.8	2.13	2.81%
ΔV = -5 m/sec $\ddot{R}$ = 0 m/sec^2 T_A = 0.0 sec	16.8	0.60	3.56%

Table E-12 Error in the Warning Range Performance Metric for Nine Crash Scenario Conditions

Independent 3 sigma errors assumed

R = 0.06 *sqrt(2) m

ΔV = 0.09 *sqrt(2) m/sec

$\ddot{R}$ = 0.10 m/sec^2

T_A = 0.050 sec

Imminent crash alert assumed

State	Warning Range (m)	3sigma of metric (m)	Ratio 3sig /Warn Range
ΔV = -5 m/sec $\ddot{R}$ = 0 m/sec^2 T_A = 0.10 sec	10.1	0.43	4.24%
ΔV = -27 m/sec $\ddot{R}$ = 0 m/sec^2 T_A = 0.10 sec	100	1.63	1.63%
ΔV = -27 m/sec $\ddot{R}$ = -3 m/sec^2 T_A = 0.10 sec	100	2.57	2.57%
ΔV = -5 m/sec $\ddot{R}$ = -3 m/sec^2 T_A = 0.10 sec	10.1	0.72	7.15%
ΔV = -5 m/sec $\ddot{R}$ = 0 m/sec^2 T_A = 0.25 sec	10.1	0.45	4.43%
ΔV = -27 m/sec $\ddot{R}$ = 0 m/sec^2 T_A = 0.25 sec	100	1.65	1.65%
ΔV = -27 m/sec $\ddot{R}$ = -3 m/sec^2 T_A = 0.25 sec	100	2.59	2.59%
ΔV = -5 m/sec $\ddot{R}$ = -3 m/sec^2 T_A = 0.25 sec	10.1	0.73	7.28%
ΔV = -15 m/sec $\ddot{R}$ = -3 m/sec^2 T_A = 0.25 sec	45.5	1.57	3.46%

E.4 Minimum Required Sampling Rate for Onboard Data Acquisition System

This section describes the selection of the 20 Hz sampling rate for the data acquisitions systems onboard the SV and the POVs in the FCW evaluation tests. Table E-13 summarizes the data rate requirements for each measurement, along with the test scenario that drives each requirement and a brief summary of the rationale for the requirement. More details leading to the selection of each type of data rate follows the table.

The highest minimum required rate for onboard data acquisition by the instruments used to evaluate the FCW is 20 Hz. This requirement is driven by crash scenario tests in which one or more vehicles performs a lateral maneuver – the most severe of which is an 0.3g lane change. Since the onboard data acquisition system is to be as simple as possible, a 20 Hz rate will be used.

E.4.1 Longitudinal Position of SV, POVs, and Clutter

Two data rate requirements are computed here. A rate of 10 Hz is chosen.

First, consider a data acquisition rate that is driven by the highest possible bandwidth of longitudinal maneuvers. Range changes only through the low-frequency dynamics of the vehicles' longitudinal braking and/or accelerations. Assume the highest significant frequency in the dynamics from brake pedals to relative displacements is caused by the braking hydraulic system, which is modeled here as a first order system with a 0.150 sec time constant. Then choose a data rate of 5 samples per time constant, for a data rate of 33 Hz.

Second, assume that the test instructions include only step changes in brake pedal application, and assume that the range measurements of greatest interest are not within a second of a brake pedal application by either vehicle. Then accelerations will remain largely constant, and even with a relative acceleration of 0.5g, a 10 Hz rate would introduce an error in linear interpolation of measurements of $\frac{1}{2} \times 0.5 * 9.80 m/s/s * (0.10s/2)^2 = 0.012m$. Thus 10 Hz is quite sufficient under these assumptions.

E.4.2 Longitudinal Speed of SV and POVs

10 Hz. See discussion for item above.

E.4.3 Longitudinal Acceleration of SV and POVs

See discussion for item above.

E.4.4 Lateral Position of Clutter, Stationary POVs and Road

Survey locations once per setup of test site or "scene."

Table E-13 Minimum Required Data Acquisition Rates

Measurement	Minimum Data Rate Required	Test That Drives Data Rate	Data Rate Computed Based On:
Longitudinal position of SV,POVs, and clutter	10 Hz	Crash scenario tests (perhaps with braking by POV).	Assume constant relative acceleration (assume range not required during first 0.5sec of brake application). 10Hz gives 0.012m error in interpolating data for a 0.5g relative acceleration.
Longitudinal speed of SV and POVs	10 Hz	Crash scenario tests (perhaps with braking by POV).	Same as above
Longitudinal acceleration of SV and POVs	10 Hz	Crash scenario tests with braking by POV.	Same as above
Lateral position of clutter, stationary POVs and road	Once per setup of test site or "scene"	--	--
Lateral position of SV and moving POVs	4 Hz	Crash scenario tests with lateral manuevers	Available and affordable GPS units
Yaw rate of SV and POV	20 Hz	Crash scenario tests with lateral maneuvers	
Atmospheric visibility	Once per test trial when testing poor visibility performance.	Poor visibility test	--
SV brake pedal actuation time	10 Hz	Crash scenario tests: Need to know SV driver did not brake before alerts sounded.	Need for a finer resolution considered unlikely
Roadway horizontal curvature (direction change)	Once per test site	--	--
Roadway elevation change (for superelevation and vertical curvature)	Once per test site	--	--

E.4.5 Lateral Position of SV and Moving POVs

The required data acquisition rate for locating the SV laterally, as well as locating any moving POV laterally, is driven by lateral maneuvers during crash scenario tests. Assume that the dynamics of the steering wheel-to-lateral displacement and steering wheel-to-heading angle system has a 2 Hz bandwidth. Then the required data rate is estimated as ten times that bandwidth, or 20 Hz. The 20 Hz value is the highest required rate of all the measurements, and as such, it will drive data acquisition system definition.

The lateral position will be measured onboard each vehicle using onboard differential GPS units. The unit selected provides only a 4 Hz value, so a yaw rate sensor and accelerometers will be used to interpolate between the GPS data. The data rate for these must be 20 Hz to adequately capture the handling dynamics.

E.4.6 Yaw Rate of SV and POV

20 Hz. See discussion for item above.

E.4.7 Visibility

Atmospheric visibility measurements will be done once per trial of the poor visibility tests. This will capture the instantaneous visibility.

E.4.8 SV Brake Pedal Actuation Time

A 10 Hz rate will be sufficient to determine whether the SV driver brakes before the test is complete.

E.4.9 Roadway Horizontal Curvature (Direction Change)

Road geometry will be surveyed once per test site.

E.4.10 Roadway Elevation Change (For Super-Elevation And Vertical Curvature)

Road geometry will be surveyed once per test site.

DOT HS 808 964
August 1999

People Saving People
www.nhtsa.dot.gov