IN-VEHICLE SAFETY ADVISORY AND WARNING SYSTEM (IVSAWS)

VOLUME II: FINAL REPORT

NOTE TO READER:

THIS IS A LARGE DOCUMENT

Due to its large size, this document has been segmented into multiple files. All files separate from this main document file are accessible from links (blue type) in the table of contents or the body of the document.

Publication No. FHWA-RD-94-190
March 1996

Invehicle Safety Advisory and Warning System (IVSAWS),

Volume II: Final Report

U.S. Department of Transportation
Federal Highway Administration

Research and Development
Turner-Fairbank Highway Research Center
6300 Georgetown Pike
McLean, Virginia 22101-2296

DOT/FHWA
101544

FOREWORD

This report presents the results of a comprehensive study to identify candidate advisory, safety, and hazard situations where motorists would benefit from an Invehicle Safety Advisory and Warning System (IVSAWS). Functional specifications are also provided in sufficient detail to describe how these functions could be gradually incorporated into existing and future automotive vehicles. The IVSAWS, designed for rural, urban, and secondary roads, uses a proposed communication architecture based on transmitters placed on roadside signs and at roadway hazards to communicate with approaching vehicles equipped with IVSAWS invehicle radio receivers. This study will be of interest to transportation planners and engineers involved in motorist advisory and emergency communication systems.

Sufficient copies of the study are being distributed by the FHWA Bulletin to provide a minimum of two copies to each FHWA regional and division office, and five copies to each State highway agency. Direct distribution is being made to division offices.

Lyle Saxton
Director, Office of Safety and Traffic
Operations Research and Development

NOTICE

This document is disseminated under the sponsorship of the Department of Transportation in the interest of information exchange. The United States Government assumes no liability for the contents or the use thereof. This report does not constitute a standard, specification, or regulation.

The United States Government does not endorse products or manufacturers. Trade and manufacturers' names appear in this report only because they are considered essential to the object of the document.

Technical Report Documentation Page

1. **Report No.** FHWA-RD-94-190	2. Government Accession No.	3. Recipient's Catalog No.
$. Title and Subtitle Invehicle Safety Advisory and Warning System (IVSAWS), Volume II: Final Report		5. Report Date March 1996 6. Performing Organization Code
7. Author(s) K. Shirkey, G. Mayhew, B. Casella		8. Performlng Organization Report No.
3. Performing Organization Name and Address Hughes Aircraft Company 1901 West Malvern Avenue Fullerton, CA 92634-3310		10. Work Unit No. (TRAIS) 3B2B 11. Contract or Grant No DTFH61-90-C-00030
2. Sponsoring Agency Name and Address Office of Safety and Traffic Operations R&D Federal Highway Administration 6300 Georgetown Pike McLean, Virginia 22101-2296		13. Type of Report and Period Covered Final Report Sept.1990 - Sept.1994 14. Sponsoring Agency Code

5. Supplementary Notes

Contracting Officer's Technical Representative (COTR): Milton (Pete) Mills,HSR-10

16. Abstract

The Invehicle Safety Advisory and Warning System (IVSAWS) is a Federal Highway Administration effort to develop a nationwide vehicular information system that provides drivers with advance, supplemental notification of dangerous road conditions using electronic warning zones with precise areas of coverage. The research study investigated techniques to provide drivers with advance notice of safety advisories and hazard warnings so drivers can take appropriate actions. The technical portion of the study identified applicable hazard scenarios, investigated possible system benefits, derived functional requirements, defined a communication architecture, and made recommendations to implement the system.

This volume is the second in a series. The other volumes in the series are:

FHWA-RD-94-061 Volume I: Executive Summary
FHWA-RD-94-191 Volume III: Appendixes A Through H (Reference Materials)
FHWA-RD-94-192 Volume IV: Appendixes I Through K (Reference Materials)
FHWA-RD-94-193 Volume V: Appendixes L Through V (Reference Materials)

17. Key Words Safety System,vehicle safety system, vehicle proximity alerting system, invehicle safety/warning system, IVSAWS	18. Distribution Statement No restrictions. This document is available to the public through the National Technical Information Service, Springfield, Virginia 22161.

19. Security Classif. (of this report) Undassified	20. Security Classif. (of this **page)** Undassified	**21. No. of Pages** 244	**22. Price**

Form DOT F 1700.7 (8-72) Reproduction of completed page authorized

METRIC/ENGLISH CONVERSION FACTORS

ENGLISH TO METRIC

LENGTH (APPROXIMATE)

1 inch (in) = 2.5 centimeters (cm)
1 foot (ft) = 30 centimeters (cm)
1 yard (yd ❑ 0.9 meter (m)
1 mile (mi) = 1.6 kilometers (km)

AREA (APPROXIMATE)

1 square inch (sq in, in^2 = 6.5 square centimeters (cm^2)
1 square foot (sq ft, ft^2 = 0.09 square meter (m^2)
1 square yard (sq yd, yd^2) = 0.8 square meter (m^2)
1 square mile (sq mi, mi^2) = 2.6 square kilometers (km^2)
1 acre = 0.4 hectares (he) = 4,000 square meters (m^2)

MASS - WEIGHT (APPROXIMATE)

1 ounce (oz) = 28 grams (gr)
1 pound (lb) = .45 kilogram (kg)
1 short ton = 2,000 pounds (Lb) = 0.9 tonne (t)

VOLUME (APPROXIMATE)

1 teaspoon (tsp) = 5 milliliters (ml)
1 tablespoon (tbsp ❑ 15 milliliters (ml)
1 fluid ounce (fl oz) = 30 milliliters (ml)
1 cup (c) = 0.24 liter (l)
1 pint (pt) = 0.47 liter (l)
1 quart (qt) = 0.96 liter (l)
1 gallon (gal) = 3.8 liters (l)
1 cubic foot (cu ft, ft^3) = 0.03 cubic meter (m^3)
1 cubic yard (cu yd, yd^3) = 0.76 cubic meter (m^3)

TEMPERATURE (EXACT)

[(x-32)(5/9)] ^oF ❑ y ^oC

METRIC TO ENGLISH

LENGTH (APPROXIMATE)

1 millimeter (mm) = 0.04 inch (in)
1 centimeter (cm) = 0.4 inch (in)
1 meter (m) = 3.3 feet (ft)
1 meter (m) = 1.1 yards (yd)
1 kilometer (km) = 0.6 mile (mi)

AREA (APPROXIMATE)

1 square centimeter (cm^2) = 0.16 square inch (sq in, in^2)
1 square meter (m^2) = 1.2 square yards (sq yd, yd^2)
1 square kilometer (km^2) = 0.4 square mile (sq mi, mi^2)
1 hectare (he) = 10,000 square meters (m^2) = 2.5 acres

MASS - WEIGHT (APPROXIMATE)

1 gram (gr) = 0.036 ounce (oz)
1 kilogram (kg) = 2.2 pounds (lb)
1 tonne (t) = 1,000 kilograms (kg) = 1.1 short tons

VOLUME (APPROXIMATE)

1 milliliters (ml) ❑ 0.03 fluid ounce (fl oz)
1 liter (1) = 2.1 pints (pt)
1 liter (l) = 1.06 quarts (qt)
1 liter (l) = 0.26 gallon (gal)
1 cubic meter (m^3) = 36 cubic feet (cu ft, ft^3)
1 cubic meter (m^3) = 1.3 cubic yards (cu yd, yd^3)

TEMPERATURE (EXACT)

[(9/5) y + 32] ^oC ❑ x ^oF

QUICK INCH-CENTIMETER LENGTH CONVERSION

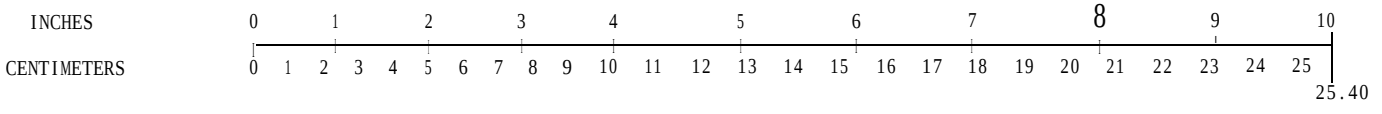

QUICK FAHRENHEIT-CELSIUS TEMPERATURE CONVERSION

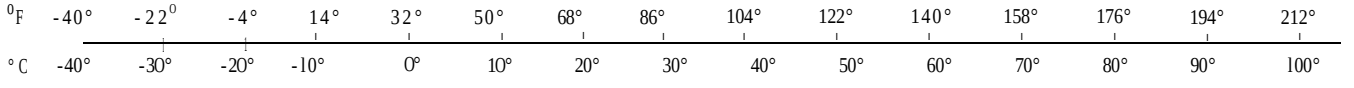

For more exact and or other conversion factors, see NBS Miscellaneous Publication 286, Units of Weights and Measures. Price $2.50. SD Catalog No. Cl3 10286.

TABLE OF CONTENTS

Section **Page**

VOLUME I:

EXECUTIVE SUMMARY - IVSAWS FINAL REPORT 1

REFERENCES 23

VOLUME II:

CHAPTER 1. INTRODUCTION 25

CHAPTER 2. HAZARD SCENARIO IDENTIFICATION AND SIGNALING PRESENTATION ANALYSIS 29

CHAPTER 3. RESULTS OF THE DRIVER ALERT WARNING SYSTEM MOCKUP TESTING AND EVALUATION 51

CHAPTER 4. FREQUENCY BAND SELECTION ISSUES 69

CHAPTER 5. DRIVER ALERT DISTANCE RANGE DETERMINATION 83

CHAPTER 6. GENERAL PUBLIC AND DEPLOYMENT COMMUNITY SURVEYS 91

CHAPTER 7. THE PRACTICALITY OF IVSAWS DEPLOYMENT BY RAILROAD OPERATORS 111

CHAPTER 8. FUNCTIONAL DEFINITION 125

CHAPTER 9. SYSTEM ARCHITECTURE ANALYSIS 137

CHAPTER 10. NARROWBAND GPS ARCHITECTURE WAVEFORM DESIGN 179

CHAPTER 11. NARROWBAND GPS ARCHITECTURE PERFORMANCE ANALYSIS 197

CHAPTER 12. OPERATIONS CENTER IMPLEMENTATION ANALYSIS 225

CHAPTER 13. VEHICLE RETROFIT ANALYSIS 237

CHAPTER 14. ANTENNA PERFORMANCE ANALYSIS 247

REFERENCES 253

VOLUME III:

APPENDIX A: WORKPLAN FOR THE INVEHICLE SAFETY ADVISORY AND WARNING SYSTEM (IVSAWS) ..... A-l

APPENDIX B: IVSAWS ENGINEERING CHANGE PROPOSAL 3 (ECP-003) OVERVIEW ..... B-l

APPENDIX C: INVEHICLE SAFETY ADVISORY AND WARNING

TABLE OF CONTENTS
(continued)

Section **Page**

APPENDIX E: DRIVER ALERT DISTANCE ANALYSIS ..... E-l

APPENDIX F: COMMUNICATION PATH GEOMETRY ANALYSIS F-1

APPENDIX G: INVEHICLE SAFETY ADVISORY AND WARNING SYSTEM (IVSAWS) TASK E REPORT, RESULTS OF THE DRIVER ALERT WARNING SYSTEM DESIGN MOCKUP TESTING AND EVALUATION ..... G-l

APPENDIX H: PROPOSAL FOR THE INVEHCLE ADVISORY AND WARNING SYSTEM (IVSAWS) ..... H-l

VOLUME IV:

APPENDIX I: INVEHICLE SAFETY ADIVSORY AND WARMNG SYSTEM (IVSAWS) COMMUNICATIONS TECHNOLOGY SELECTION . . . . I-l

APPENDIX J: ENGINEERING CHANGE PROPOSAL 2 REPORT, IVSAWS COMMUNICATION SUBSYSTEM ARCHITECTURE TRADEOFFS ..... J-l

APPENDJX K: ASSESSMENT OF IVSAWS DEPLOYMENT PRACTICALITY ..... K-l

VOLUME v:

APPENDLX L: RAILROAD INDUSTRY INTERVIEW RESULTS ..... L-l

APPENDIX M: MARKET-POTENTIAL ASSESSMENT OF IVSAWS RESEARCH AMONG THE GENERAL PUBLIC AND DEPLOYMENT PROFESSIONALS ..... M-l

APPENDIX N: IVSAWS TASK B, SUBTASK 4 REPORT (ENGINEERING CHANGE PROPOSAL 3, OPTION AA) FUNCTIONAL DEFINITION N-1

APPENDIX 0: IVSAWS SYSTEM ARCHITECTURE ANALYSIS ..... O-l

APPENDIX P: IVSAWS WAVEFORM DESIGN #l (NARROWBAND COMMUNICATION WITH GPS AOC CONTROL) P-1

APPENDJX Q: IVSAWS WAVEFORM DESIGN #2 (RBDS COMMUNICATION WITH COVERAGE CONTROL) ..... Q-l

APPENDIX R: IVSAWS PERFORMANCE ANALYSIS ..... R-l

APPENDIX S: IVSAWS IMPLEMENTATION ANALYSIS ..... S-l

APPENDJX T: IVSAWS RETROFIT ANALYSIS ..... T-l

APPENDIX U: IVSAWS ANTENNA PERFORMANCE ANALYSIS ..... U-l

APPENDIX V: DESIGN CONCEPT FOR AN INVEHICLE SAFETY ADVISORY AND WARNING SYSTEM (IVSAWS) .....I..... V-l

VOLUME I
LIST OF FIGURES

Figure		Page
1.	System concept	1
2.	IVSAWS program road map	3
3.	Preference index by subject group	12
4.	Link losses in flat terrain	14
5.	Link losses in heavy foliage	14
6.	Scenario issues	15
7.	Customer-requested features	16

VOLUME I
LIST OF TABLES

Table		Page
1.	Metropolitan areas by population	10
2.	Combined ranking of scenarios	11
3.	Driver alert distances	14
4.	Functional characteristics of the communication architecture candidates	20
5.	Functional characteristics of the geolocation architecture candidates	20
6.	System architecture comparisons	21

VOLUME II
LIST OF FIGURES

Figure		Page
1.	IVSAWS original task flow	26
2.	IVSAWS program flowchart (ECP-003)	27
3.	Task B, subtask 6 technical approach	41
4.	Emergency vehicle situation with/without warning	44
5.	Mockup construction and dimensions	55
6.	Current SAE driver packaging model	59
7.	Preference index by subject group	62
8.	Mean rank and standard deviation of signal options	63
9.	Preference by age group	64
10.	Mean preference by subject group	65
11.	Preference index for female population group	66
12.	Task flow for IVSAWS frequency band selection	69
13.	Link losses for geometry A - straight road over flat surface	74
14.	Link losses for geometry B - curved highway through trees	74
15.	Link losses for geometry C - highway through rolling hills	75
16.	Link losses for geometry D - curved road with interleaving mountains	75
17.	U.S. frequency usage in the 410-MHz to 470-MHz band	78
18.	Site locations of AN/FPS- 115 PAVE PAWS	79
19.	Driver alert distance time line	84
20.	Geometry A link margins versus vehicle speed and hazard avoidance maneuver	88
21.	Geometry B link margins versus vehicle speed and hazard avoidance maneuver	88
22.	Geometry C link margins versus vehicle speed and hazard avoidance maneuver	89
23.	Geometry D link margins versus vehicle speed and hazard avoidance maneuver	89

VOLUME II
LIST OF FIGURES
(continued)

Figure		Page
24.	Preference index by subject group	94
25.	Percentage of Americans living in urban areas	95
26.	Scenario with alert discrimination - accident on overpass road	100
27.	Scenario with alert discrimination - accident on parellel access road	100
28.	Warning-time attribute importance	101
29.	Warning-distance attribute importance	101
30.	False-alarm attribute importance	102
31.	Maximum purchase price acceptable to general public for invehicleunit	102
32.	Deployment-time attribute importance	104
33.	Maximum purchase price acceptable to deployment agencies for invehicle unit	105
34.	General QFD design flowchart	128
35.	IVSAWS QFD design flowchart	129
36.	Requirements model structure	130
37.	Nested layers of functional definition	132
38.	IVSAWS system-level function cost-effectiveness boundaries	133
39.	LPHAR block diagram	139
40.	AHAR block diagram	140
41.	RBDS/SCA block diagram	142
42.	SAP block diagram	146
43.	T-net block diagram	148
44.	220-MHz to 222-MHz band	150
45.	IVSAWS exclusive use in the 220-MHz to 222-MHz band	150
46.	Cellular block diagram	152

VOLUME II
LIST OF FIGURES
(continued)

Figure		Page
47.	Impulse block diagram	155
48.	Packet radio block diagram	157
49.	Trunk radio block diagram	159
50.	Shared-channel block diagram	161
51.	Microwave block diagram	163
52.	Terrapin's PINS block diagram	167
53.	GPS block diagram	168
54.	Loran-C block diagram	170
55.	Constraint length seven half-rate convolutional encoder	180
56.	n/4 shifted, differentially encoded QPSK constellation	181
57.	Modulation process using raised-cosine filtering	182
58.	IVSAWS emissions mask	183
59.	Frame structure	185
60.	The Traverse Mercator Projection (the cylinder is chosen slightly smaller than the earth to reduce distortion to a minimum between angles and distance on the earth as compared to the same two quantities on the map)	187
61.	UTM 6°-wide standard zones (each zone has as its east and west limits a meridian of longitude, and one central meridian for a 6" by 8" N-S area determined by the column (zone) and row (alphabetic) UTM terms, e.g., the shaded area shown here is designated as 30P)	188
62.	Grid-square designators (the letters and numbers indicate grid-zone designation, 100 000-m square identification, and grid coordinates of the point expressed to the desired accuracy)	188
63.	Direction indicator bit assignments	189
64.	Continue message structure	193
65.	Free-text message structure	193
66.	Delete message structure	194

VOLUME II
LIST OF FIGURES
(continued)

Figure		Page
67.	System time and GPS correction message structure	194
68.	AOC extention message	194
69.	Bandwidth power efficiency plane (coherent demodulation, $P_b(e) = 10^{-5}$)	198
70.	Relative complexity of candidate modulation schemes	199
71.	Rayleigh fading probability at 220 MHz	201
72.	IVSAWS x/4-shifted DQPSK performance (differentially coherent demodulation)	203
73.	IVSAWS preamble auto-correlation function	205
74.	Non-coherent combining losses (non-coherent combining losses as a function of pulses combined and the per pulse signal-to-noise ratio, Naval Research Laboratory Report 8025)	207
75.	Detection and false alarm performance (required signal-to-noise ratio as a function of probability of detection to achieve a particular probability of false alarm, Naval Research Laboratory Report 11930)	208
76.	DQPSK BER performance over a Rayleigh fading channel	210
77.	Relationship between average channel bit error rate (P_{cb}) and the BER at the output of a hard-decision Viterbi decoder (K = constraint length, R = code rate)	212
78.	Predicted IVSAWS base station and mobile unit communication ranges	219
79.	Base station layout over smooth terrain (four channels are sufficient to provide continuous coverage while maintaining an acceptable co-channel signal-to-interference (S/I) margin)	221
80.	Narrowband communication - GPS AOC control system	226
81.	RBDS - GPS/Terrapin AOC control system architecture	227
82.	IOC block diagram	229
83.	IOC hardware diagram	232

VOLUME II
LIST OF FIGURES
(continued)

Figure		Page
84.	IOC base station transmitter links using microwave repeaters	235
85.	Invehicle block diagram	238
86.	Invehicle information flow	238
87.	Invehicle retrofit diagram, option 1	239
88.	Invehicle retrofit diagram, option 2	241
89.	Vehicle antenna candidates	247
90.	Gain degradation of a 762-mm monopole tuned to 220 MHz as a function of length variation	249
91.	VHF/UHF diplexer and GPS link	250
92.	Calculated elevation pattern of an FM monopole @ 222 MHz	251
93.	Measured elevation pattern of a cellular monopole @ 250 MHz	251

VOLUME II
LIST OF TABLES

Table		Page
1.	Rankings of possible IVSAWS applications	36
2.	Tentative IVSAWS alerting messages	46
3.	Alerting-message design guideline sources	47
4.	Preliminary requirement for frequency band search	71
5.	Candidate IVSAWS frequency bands	71
6.	Terrain geometry selection	72
7.	Hazard avoidance maneuver distances	85
8.	Decision sight distances	85
9.	Driver alert distances	87
10.	Ranking of scenarios	93
11.	Architecture tradeoff summary	94
12.	Urban areas by population	96
13.	Workshop ranking of scenarios	98
14.	Community classifications for indepth interviews	105
15.	Rankings of possible IVSAWS applications	109
16.	Combined list of deployment professionals and motorist requested features	109
17.	Class I railroads	115
18.	Communication architecture functional characteristic tradeoffs	165
19.	Communication architecture technology tradeoffs	166
20.	Frequency allocation	172
21.	Transmission capability	174
22.	Communication architecture transfer rate	175
23.	Error detection and recovery capability	177
24.	Differential phase code	180

VOLUME II
LIST OF TABLES
(continued)

Table		Page
25.	Alert types	184
26.	Allocations for alert duration	186
27.	Alert status	186
28.	Field allocations for zone location	189
29.	AOC shapes	190
30.	Message extension subfield contents	190
31.	Station ID, station health, and Z-count field structure	191
32.	Field structure for GPS correction	192
33.	Field allocations for system time	192
34.	Performance of candidate modulation schemes over a Rayleigh fading channel	201
35.	Noise power at receiver	210
36.	Terrain descriptions	217
37.	Extended Longley-Rice model parameters	218
38.	Performance of selected half-rate codes	220
39.	Fleet management systems	229
40.	Development software costs	230
41.	PC-based IOC hardware costs	232
42.	UNIX workstation-based IOC hardware costs	233
43.	IOC communication connections	233
44.	Base station hardware costs	235
45.	Cables and connections retrofit, option 1	242
46.	Cables and connections retrofit, option 2	242
47.	Baseline equipment costs	243
48.	Retrofit equipment and installation costs, option 1	243

VOLUME II
LIST OF TABLES
(continued)

Table		Page
49.	Retrofit equipment and installation costs, option 2	243
50.	Summary of antenna candidates	248

CHAPTER 1. INTRODUCTION

OVERVIEW

Invehicle Safety Advisory and Warning System (IVSAWS) is a Federal Highway Administration program to develop a nationwide vehicular information system that provides drivers with advance, supplemental notification of dangerous road conditions. These warnings will occur at a point sufficiently upstream from the hazard to enable the driver to take appropriate action. The goal is to ameliorate the severity of scenarios that are particularly hazardous and have remained hazardous despite traditional crash-reduction techniques, such as additional mechanical signing. Primary emphasis is given to scenarios for rural settings, although most scenarios are equally valid for both urban and rural conditions.

The technical portion of the effort consists of analysis of potential scenarios for such a system, assessment of the possible benefits, derivation of functional and technical requirements, development of technical system requirements, subsystem validation of system concepts, and recommendations for an optimal system implementation as part of a total invehicle motorists information package.

IVSAWS provides additional safety by enhancing the real-time interaction between the general driving public and professional deployment agencies, such as law enforcement, fire departments, paramedics, and railroad operations. The professional deployment community acceptance of IVSAWS depends on a valid operational concept. Operator workload, user interfaces, cost limits, and perceived safety benefits are all critical issues. The general public's acceptance of IVSAWS depends on perceived benefits relative to real costs. Consumer acceptance and corresponding costs are key issues because the U.S. Department of Transportation's strategy for Intelligent Vehicle-Highway System (IVHS) implementation in America is that IVHS will ultimately be funded by consumer purchases.

PROGRAM STRUCTURE

The IVSAWS program is a 3-year effort to define and demonstrate a safety advisory warning system that is applicable to roadway hazards on rural, urban, primary, and secondary highways. Radio transmitters placed near roadway hazards or on moving vehicles communicate warnings to approaching vehicles equipped with radio receivers. Drivers receive both audible and visual warnings to ensure driver comprehension and accurate response. Warnings are presented to the driver at a maximum effectiveness distance determined by the hazard type, vehicle type, and vehicle speed. IVSAWS is capable of stand-alone operation to communicate advisory warnings and traffic information. IVSAWS also has enough flexibility to work with other IVHS traffic management systems. IVSAWS specifications provide sufficient detail to permit gradual incorporation of its functions into existing and planned automotive vehicles.

This new system is being developed for the U.S. Department of Transportation Federal Highway Administration (DOT/FHWA). This program phase was completed in December 1993.

IVSAWS is partitioned into 11 tasks, as shown in figure 1. Task A establishes the workplan for the entire program, Task B defines a prioritized list of scenarios that are particularly hazardous and have remained hazardous despite traditional crash-reduction treatments. Task C defines the baseline system with an emphasis on the communication architecture. Task D procures equipment for the communication system and the driver interface simulations. Task E develops

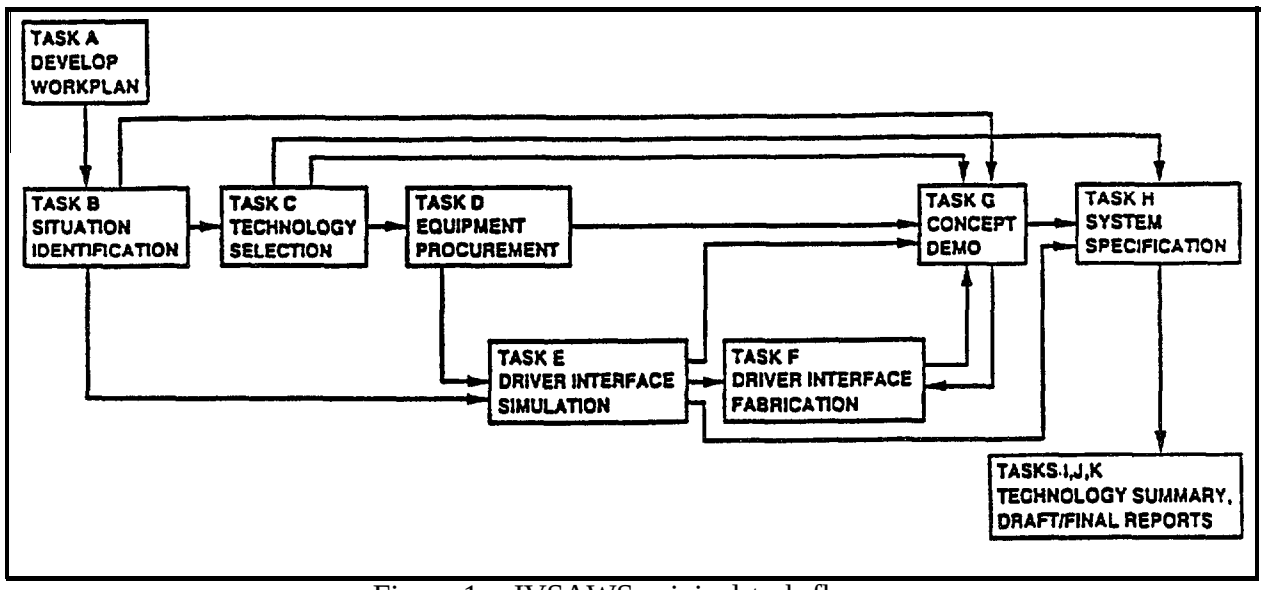

Figure 1. IVSAWS original task flow.

the invehicle driver warning system. Task F fabricates a test version of the driver warning system. Task G demonstrates the communication system and performs human factors tests to determine the utility of the key driver alert features. Task H develops a system specification for the baseline IVSAWS design. Tasks I, J, and K document the program results.

PROGRAM RESTRUCTURING

The original IVSAWS Task C Report documented an operational concept in which warning units functioned as independently operating transmissions nodes performing local area broadcasts. Vehicular units interacted with these warning units to determine their direction and range. The vehicular units then used the vehicle's speed and heading to determine the appropriate instance for alerting the motorist. Two system communication architectures — the two-way spread-spectrum and the narrowband global positioning system (GPS) — were identified that supported this operational concept. Separate studies by MITRE concluded that any wideband approach in the near term was not feasible. Also, as a result of other engineering studies, several scenarios were identified that were potential hazards, but required significantly more functional capability than the others in order to ameliorate the hazard scenario. In particular, tailored warning zones to eliminate false or irrelevant alerts to drivers would require a precise geolocation capability and, hence, increased system cost. Since accident data alone could not resolve these system functionality issues, several special tasks were undertaken to interact with the user community.

The functional capability issues in IVSAWS were resolved by investigating three different sections of the user community, as shown in figure 2. First, the preferences of motorists who would benefit from the system were solicited using both rural and urban market surveys. Second, a concept workshop was conducted for State highway transportation officials at the 1992 Conference on Improving Rural Transportation Through Advanced Transportation Technologies in Redding, California. Third, the safety professionals who would deploy the system were

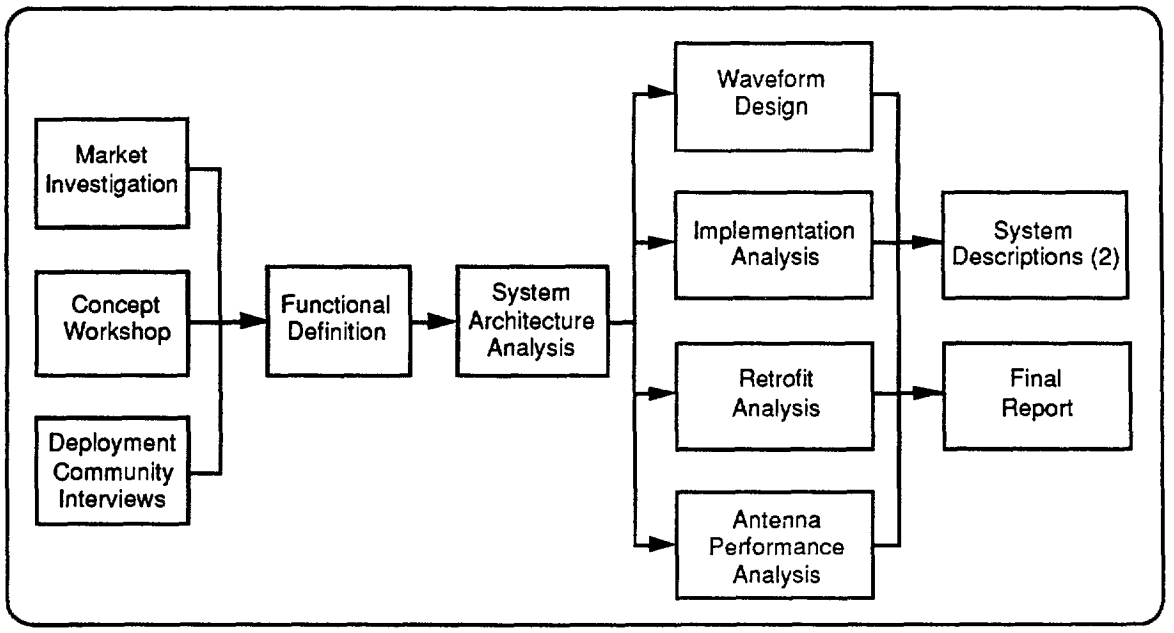

Figure 2. IVSAWS program flowchart (ECP-003).

interviewed in detail regarding their preferences for the system functionality and operational concept. Together, these three activities produced a combined, ranked list of system features that IVSAWS should have to meet the needs of all consumer groups. In particular, the deployment community interviews resoundingly affirmed that the IVSAWS operational concept should be changed from independently operated transmission nodes to centralized alert broadcasts from a regional operations center.

The results of these studies provided the inputs to the system engineering process used to develop and evaluate the IVSAWS functional requirements. When properly implemented, the functional requirements should enable IVSAWS to fulfill its primary objective — increase the probability of correct driver response to hazardous roadway conditions. The systems engineering process used for the IVSAWS program was a hybrid of two quantitative systems engineering methods: Quality Function Deployment and Structured Requirements Specification. As a result of these processes, the ability to prevent irrelevant alerts from being presented to the driver, and consequently a means for precisely determining the alert area of coverage, were both identified as major system capabilities required by IVSAWS.

The System Architecture Analysis analyzed existing communication and geolocation architectures available to satisfy these functional requirements. Local area broadcast systems, wide-area broadcast systems, existing backbone systems, and point-to-point systems were all examined for communications compatibility with the IVSAWS requirements. For the geolocation features, the global positioning system, position information navigation system (PINS), and Loran-C were all examined for their compatibility with the IVSAWS requirements. The resulting two candidate architectures are: (1) a narrowband communication in the 220-MHz to 222-MHz band with GPS geolocation subsystem; and (2) radio broadcast data system (RBDS) with PINS or GPS geolocation subsystem.

The waveform design task defined a communications waveform for each candidate system architecture. This task defined the modulation type, emission mask, transmit power, message structure, and data link performance metrics for each system architecture. Supplements or

changes to the waveform to support the mobile transmitter platforms were also identified. Techniques were employed to minimize transmitter message collisions to ensure accurate and reliable alert message delivery.

For the implementation task, emerging technologies and available commercial hardware were examined to determine a cost-effective means to implement the various subsystems that comprise the IVSAWS solution. Since the deployment community operational concept specifies a regional operations center, special attention was given to existing hardware and software that would facilitate the rapid establishment of a highly capable, but affordable, operations center.

The retrofit analysis examined the equipment configurations needed to construct modular invehicle units that could be packaged as a retrofit kit or as an integrated part of a driver information navigation system. Cost data were established for each configuration. Full functionality and affordable costs are both critical to consumer acceptance of IVSAWS.

The antenna performance analysis examined the antenna configurations required by each candidate system architecture in order to implement the basic communications and ranging functions. The narrowband architecture requires a GPS antenna for the geolocation function and has four equally viable choices for the communication antenna. The RBDS architecture uses the standard vehicle FM antenna for the communications functions and either a GPS or PINS FM antenna for the geolocation function. In all cases, the performance requirements are satisfied at a low cost without creating an automotive ornament that is unappealing to motorists and, hence, liable to cause rejection of IVSAWS purely on the basis of vehicle aesthetics.

All aspects of the system descriptions and final recommendations are documented in this IVSAWS final report. After reviewing the results from task B, the original task C, and task E, the order of the chapters follows the flow illustrated in figure 2.

CHAPTER 2. HAZARD SCENARIO IDENTIFICATION AND SIGNALING PRESENTATION ANALYSIS

INTRODUCTION

This chapter constitutes the final report for task B, Invehicle Safety Advisory and Warning Systems (IVSAWS). The task B final report describes the definition and prioritization of candidate advisory, safety, and hazard situations that could be affected by IVSAWS. Included are methods and rationale for situation selection, cases illustrating select crash situations, and a privatization of identified IVSAWS application scenarios.

DELINEATION OF TASK STUDY TASKS

Task B included the following subtasks: (1) to identify candidate advisory, safety, and hazard situations, and using recent rural and urban highway accident data, to develop ranking criteria to determine the severity of accidents, and to list them in a hierarchical order according to potential benefits to safety and traffic operations (i.e., operational performance and estimated frequency of occurrence), (2) to determine which situations could be helped by an IVSAWS (refer to Chapter II, "The Highway Safety Problem" of report no. FHWA/RD-8 l/124 for guidance), (3) to use the ***Manual on Uniform Traffic Control Devices (MUTCD)*** as a guide to develop ranking criteria and apply them to determine which warning and regulatory signs should be replicated within a motorist's vehicle to improve safety and traffic operations, (4) to use human factors analysis to make a realistic determination of which messages shall affect the proper response, given the attention needed for the driving process, and (5) to reduce driver annoyance, a method to defeat or defer frequently repeated messages shall be found.

As stated in the task B workplan, ***Feasibility and Concept Selection of a Safety Hazard Advance Warning System*** (report no. FHWA/RD-8 l/124) is inadequate for determining crash situations that could be ameliorated through implementation of IVSAWS technologies. To improve the state of knowledge about possible crash scenarios that could benefit from IVSAWS, several group discussions involving experts in intelligent vehicle-highway systems (IVHS), highway design, crash data analysis, accident investigation and reconstruction, and human behavior were conducted.

The initial discussion focused on identifying crash data that could help pinpoint and rank crash situations that could be remedied by an IVSAWS technology. This first meeting began with a brainstorming session to determine a few crash situations that the expert panel believed could be affected by IVSAWS. This was done to provide sufficient background information for development of a data analysis and prioritization system. Results from report no. FHWA/RD-8 l/l 24 were reviewed, and professional observations from the expert group members' experience were used to develop a short list of crash situations. From this discussion, it was determined that identifying crash situations amenable to IVSAWS applications and subsequently ranking these applications based on the analysis of exact crash data sets was infeasible. Existing computerized crash data sets provide insufficient detail to conduct analyses that would provide the type of information necessary to identify crash situations amenable to IVSAWS technology.

At this point, it was determined that the best course of action was to convene group discussions to identify specific crash situations amenable to IVSAWS technologies using the experience and knowledge of the experts involved in the discussions. Once specific situation types had been identified, a review of detailed crash investigations was conducted to identify individual cases that would illustrate the general crash scenarios.

However, the use of mass statistical data was not abandoned altogether. Examination of crash data from Michigan and Washington State, as well as the 1988 General Estimates System (a probability sample of all police-reported crashes occurring in the United States), was believed to be useful in helping to bound the number of crashes involving some scenarios. While insufficient detail was available in these data sets in order to examine all of the scenarios identified by the group discussions, scenarios represented by sufficient data were examined.

CRASH SCENARIOS AMENABLE TO IVSAWS TECHNOLOGIES

In general, IVSAWS technologies are best applied in situations in which the risk of a crash is relatively high, the risk is known in advance, and the situation occurs infrequently. In addition, the severity of the crash that is risked would preferably be high. Furthermore, IVSAWS technologies are well suited for sites with relatively high travel speeds that act to both reduce reaction time available for collision avoidance and increase crash severity.

In order for IVSAWS technologies to be maximally effective, they should be applied in ways to reduce driver habituation effects. That is, the system should be activated infrequently to avoid the situation of drivers ignoring frequently occurring warnings (spurious or real). It is equally important that warnings be issued only to vehicles that can benefit from the advance warning. Reception of warnings by drivers who are not at risk will likely act to reduce the attention paid to all IVSAWS warnings, reducing their effectiveness.

In the discussions that follow, each of the IVSAWS application scenarios identified by the group discussions is explained. For some of the scenarios, cases of specific crashes are provided that illustrate the general crash scenarios.

Accident-Involved or Disabled Vehicle

An advanced warning of a disabled vehicle ahead could prevent drivers from crashing into the disabled vehicle from the rear or prevent drivers from having to perform a radical avoidance maneuver that could force them into oncoming traffic or into some roadside obstacle, such as a utility pole, ditch, or tree. Such a system could be activated automatically via crash sensors similar to those used to activate airbags or the system could be activated manually by the driver. If IVSAWS was implemented so that the automatically generated warning (activated by a crash) also sent out a distress signal to police (augmented with a vehicle location code), the system could affect a significant reduction in death and injury outcomes by reducing the response time for emergency medical treatment. Such a “mayday” signal could perhaps be sent only in crashes having a sufficient delta-V that serious injury to vehicle occupants was likely.

Such an automatically activated system may have been of benefit in reducing the crash trauma induced in the recent chain-reaction crashes in Tennessee and Utah that were caused, in part, by high travel speeds and limited sight distances that obscured vehicles disabled by previous crashes.

Crash Site - Police Activated

This application is similar to the previous one except that the deployment of the system differs. In this application, a transmitter is programmed and placed at the crash scene by police, much like flares might be currently deployed. Police could select an appropriate message to assist with traffic control at the scene. Once again, secondary collisions at the crash scene and crashes caused by avoidance maneuvers are the target of this IVSAWS application.

Disabled Truck at Roadside

In this application, the IVSAWS warning would be activated to supplement or replace reflectors at the roadside. This application would be particularly useful on primary and interstate highways where travel speeds are high.

School Bus or Other Special Vehicle Hazard

Many special-use vehicles create hazards because of repeated stops or slow travel speeds relative to regular traffic. Crashes resulting from the operation of these vehicles may be the result of impacts with the special vehicle itself or with traffic backed up behind the vehicle or maneuvering around the vehicle. An IVSAWS system could provide drivers with a warning of the upcoming hazard in sufficient time to slowdown to react to the upcoming situation. One case involves a car striking a slow-moving snowplow/salt truck on an interstate highway. Another case involves a collision of a car with a civilian car used as a mail delivery vehicle.

Highway Construction Zones

IVSAWS transmitters could be deployed to accurately reflect the changing conditions at and around construction zones. Work crews could change the transmitted messages to reflect current road conditions as work progresses and changes in character. In this way, drivers would be presented with the most timely information, reducing the likelihood that they will dismiss messages as not being pertinent.

Traffic Backups

IVSAWS transmitters could be deployed to notify drivers of impending traffic backups, This may not be practical for some recurrent traffic congestion problems. In recurrent situations, the message may be so repetitive as to cause driver habituation, thus diminishing the value of the message. However, this application may be more practical in nonrecurrent traffic backup situations. Traffic may backup as a result of a crash or other roadside or off-road event (via lane blockage or "rubbernecking"). In these cases, police or other emergency personnel may set up IVSAWS transmitters to inform upstream traffic of the upcoming blockage. Another likely application is at locations on the highway where traffic backups are frequent, but are not so regular in occurrence that driver habituation becomes an issue. Such a location is at or near construction zones. One case in the files is a multi-car crash that occurred upstream of a construction zone where traffic had backed up well in advance of the construction zone.

"Mini-Zones" Involving Roadside Work

Crashes may occur at roadside "mini-zones" — areas where roadside work is in progress for limited periods of time. An example of these mini-zones includes utility construction sites where utility vehicles are present in the roadway while work is in progress at or near the roadway itself. The presence of these zones could be announced to upstream traffic via IVSAWS. Expert panel conversations with corporate safety directors of several Michigan utilities suggested that crashes involving roadside utility crews and/or their vehicles are extremely rare events. However, further research into the number and nature of such crashes may shed more light on IVSAWS applicability in these situations. Unfortunately, available crash data are unsuitable for this level of detailed analysis.

Temporary Detour Routes

The IVSAWS applications on temporary detour routes take two basic forms. First, IVSAWS could serve to warn of special hazards that may be encountered on the detour. An example of this

application in the files is a crash of a semitrailer truck as it tried to negotiate a curve at excessive speed on an interstate highway detour. The second possible application deviates from IVSAWS as a safety warning system and, instead, serves to provide route guidance. Transmitters could be placed along a detour path (created because of construction, a massive accident, or other special event) to direct traffic so that drivers do not get lost. While this application deviates from the hazard warning application of IVSAWS, it capitalizes on an IVSAWS installation to obtain greater functionality as a public service.

Multiple (Compounding) Hazardous Conditions

IVSAWS applications could be useful in reducing the problems caused by multiple hazards. Take the example of the semitrailer truck crash while traveling at excessive speed through the curve. The curve was not a significant hazard when traveled at the posted speed, but became hazardous to a vehicle traveling at excessive speed. A system could be designed to relay a “slow-down” message to a vehicle traveling at an excessive speed through a curve. The vehicle message system could monitor vehicle speed, and the message would be signaled only to drivers in vehicles that are traveling over a predetermined speed.

Systems that could take advantage of environmental sensors may signal drivers at sites (e.g., curves, bridges) that have become particularly hazardous because of changes in the condition of the roadway (e.g., wet, ice, snow) or atmospheric conditions (e.g., fog). The increased reaction time afforded drivers by IVSAWS technologies may be especially helpful in these conditions where stopping distance or decision sight distance is reduced by weather or road conditions.

Other multiple hazards involve road features that are somehow hidden from the driver because of horizontal or vertical curvature of the road or other obstacles. The files contain a crash in which a car encountered a rough railroad grade after coming out of a curve at excessive speed.

Supplemental Traffic Control Device

Changes in traffic control devices may surprise drivers who travel through the site very frequently, thus contributing to crashes. Changes may result from engineering initiatives (e.g., replacing a yield sign with a stop sign, removing a stop sign) or because of some unplanned event (e.g., traffic light maintenance, power failure at a traffic control signal). IVSAWS technologies could be applied to inform drivers of changes in traffic control devices before they arrive at the area where driving decisions based on the changed traffic device would be required.

Railroad Grade Crossing

Railroad grade crossings can be hazardous. Drivers often have difficulty judging the speeds of the oncoming train, or may be unaware of the existence of the crossing. This is particularly true at night, in rural areas, or at crossings without lights or gates. IVSAWS could be applied to remedy this hazard by mounting IVSAWS equipment on the engine itself, signaling ahead to vehicles approaching the nearby crossing.

Signaling Presence of Emergency Vehicle

IVSAWS could be applied to increase driver awareness of approaching emergency vehicles. While these vehicles are already equipped with auditory and visual signals (i.e., sirens and lights), IVSAWS technologies could be applied to increase driver awareness of the approach of such vehicles. These technologies might be best used in high-density areas where there are many distractions obscuring the emergency vehicle’s siren or lights.

HIERARCHY DEVELOPMENT FOR IVSAWS APPLICATION SITUATTONS

The IVSAWS applications described in the previous sections were ranked using a two-phase scheme. First, crash data were analyzed to determine the number and relative injury severity of crashes that occur involving each scenario. Because crash data were unavailable for six of the scenarios, this step was supplemented by a prioritization based on issues of practicality and perceived benefits that may be derived from each IVSAWS application situation.

Crash Data Analysis

Three crash data sets were used to estimate frequencies of crash types that may be affected by the IVSAWS application scenarios. These data sets were the 1989 crash files from Michigan and Washington State, and the 1988 General Estimates System (GES) data produced by the National Highway Traffic Safety Administration, National Center for Statistics and Analysis. The Michigan and Washington State data sets are census files of police-reported crashes. The reporting threshold for Michigan is property damage of at least $200. For Washington State, the reporting threshold is $300. GES is a probability-based sample of crashes from the United States that are intended to be representative of all crashes nationwide.

The objective of the crash data analyses was to generate accident and injury frequencies of accident types that are represented in the 12 IVSAWS applications described in the previous sections. Data necessary to isolate many of these crash scenarios are not currently available. Much of the information required for this objective concerns the pre-crash situation, whereas the focus of most crash data files has been on the crash itself and its outcome. Data collection in the past has focused on crashworthiness, not crash avoidance. Consequently, it is not possible to estimate even broad crash frequencies for some crash types. Excluded crash types include "mini-zones," temporary detour routes, traffic backups, crashes that may be related to changes in traffic control devices, and, for the most part, crashes related to previous crashes. For the others, it has been possible to isolate crash scenarios that are either a subset or a super-set of the crash scenarios described earlier. These analyses are described in the following sections.

Accident-Involved or Disabled Vehicles

For this scenario, the analysis subset consisted of crashes in which a vehicle was stopped or disabled that were not intersection related. The purpose of this constraint was to eliminate crashes where a vehicle was stopped for a traffic light or stop sign. This subset identifies crashes involving vehicles stopped on the roadway where they would normally be expected to be moving.

In Michigan, there were 26,776 such crashes (6.4 percent of the 417,252 crashes in 1989). This subset had a lower proportion of fatal, A-level (serious) and B-level (moderate) injuries, and a higher proportion of C-level (minor) injuries than the crash data overall. Overall, in Michigan, 13.9 percent of crashes involve C-level injuries as the worst injury in the crash. For this subset, 23.4 percent involved C-level injury as the worst injury. This crash scenario was overinvolved on limited access, U.S., and State numbered routes compared to all crashes.

Similar analyses were conducted for Washington State data. Although the specific code values used to generate the subset differed from those used for Michigan, roughly the same crash subset was isolated. For Washington, subset crashes consisted of those where one vehicle was stopped on the roadway and was struck by another vehicle traveling in the same direction. Intersection and driveway-related crashes were again excluded. In Washington, there were 6,335 such crashes in 1989, 4.9 percent of the 128,000 total crashes. As in Michigan, C-level injuries were overrepresented and more serious injuries were underrepresented.

School Bus Involved

Michigan includes a data code for school bus involved or influenced crashes. In 1989, there were 2,182 such crashes, 0.5 percent of the total. The school bus itself was physically involved in 1,606 of the crashes. In 54 crashes, a person boarding or exiting the bus was injured by another vehicle. The remaining 522 did not physically involve the bus, but the bus was reported to have influenced the crash by its stop. The profile of crash severity for school bus crashes was very similar to that of all crashes. Interestingly, school bus crashes were more likely to have occurred at an intersection than crashes overall. Over 60 percent (1,318) occurred at an intersection or driveway, compared to 53.3 percent for crashes overall.

School bus involvement is also coded in the 1988 GES data. GES is designed to yield national estimates for different crash types, but 1988 was the first year of GES availability, and frequency estimates should be used with caution. For example, the GES estimate for the total number of fatal crashes in 1988 is 30,922. The census number from the Fatal Accident Reporting System (FARS) is 42,119. While the FARS figure is within the 95 percent confidence interval for the GES estimate, these differences illustrate the fact that there is a good deal of variance associated with GES estimates. The proportion of crashes involving school buses in the GES data is 0.58 percent, virtually the same as in Michigan. Crash severities are again similar to those in crashes overall,

Highway Construction Zones

The coding for highway construction zones in the Michigan data is widely considered to be unreliable, even within the Michigan Department of Transportation. Review of hard copies of police crash reports has shown that in many cases the construction zone was inactive or even nonexistent. With that caveat, there were 6,755 crashes (1.6 percent of the total) coded as occurring in construction zones. These crashes closely matched the severity profile of crashes overall. Daylight crashes, when a construction zone is typically active, were overrepresented compared to crashes overall (74.5 percent versus 61.4 percent).

Multiple (Compounding) Hazardous Conditions

This is a particularly difficult set of crash scenarios to isolate in computerized crash data. In most cases, identifying such a crash requires detailed information about a sequence of events and/or the relationship of roadway features. The combination of hazards and their sequence are critical for meaningful analysis, but such information is not generally available in current crash data that focus more on crashworthiness than on crash avoidance. Nevertheless, it is possible to isolate some broad categories of crashes that might fit this IVSAWS application. The first category discussed is snowy or icy roads in combination with curves and/or grades (horizontal and vertical curves).

In Washington State, there were 12,475 crashes (9.7 percent of the total) on snowy or icy roads in 1989. Crashes on curves were overrepresented, and the combination of grade and curve was the worst, having twice the proportion of snowy/icy crashes than crashes overall. Specifically, 15.2 percent (1,900) of the snowy or icy crashes occurred on road segments with both curves and grades, while only 7.5 percent of all crashes in Washington State were on such road segments. The proportion of property-damage crashes for this crash scenario was higher than the proportion for crashes overall (64.0 percent versus 55.7 percent).

Another application of IVSAWS technology fitting this general scenario is to provide warnings at bridges when roads are snowy or icy. In Washington State, 410 such crashes occurred (coding for Michigan on this scenario has been inconsistent and, thus, is not detailed). Although the overall crash risk is low, there could be a payoff in identifying specific bridges with particularly hazardous conditions that would warrant an IVSAWS signaling application.

Fog is another weather hazard that can be compounded by road alignment. There were 2,868 crashes (6.8 percent of the total) occurring in foggy conditions in Michigan in 1989. Serious crashes were somewhat overrepresented among fog crashes. Fog crashes were found to occur more often on a curved portion of the road than for crashes overall (7.4 percent versus 5.2 percent). IVSAWS application should probably focus on areas with severe recurrent fog problems.

Railroad Grade Crossing

Although car-train collisions are relatively infrequent events, they are usually more severe than other crashes. There were 279 such crashes in Michigan in 1989 (0.07 percent of the total). However, 26 (9.3 percent) resulted in at least one fatality, compared to 0.4 percent for crashes overall. Although the rural-urban distinction is not captured with great precision in Michigan, it appears that rural areas are overrepresented, as are crashes in darkness.

In Washington State in 1989, there were 98 car-train collisions (0.08 percent of the total). As was the case in Michigan, these crashes tended to be more severe than average (6.1 percent involving at least one death versus 0.3 percent for all crashes). The urban-rural coding is better in Washington State data and, again, rural areas were overrepresented. Almost 35 percent of car-train crashes occurred in rural areas compared to 21.4 percent for crashes overall.

Emergency Vehicles

Michigan crash data include a code for crashes involving emergency vehicles. In 1989, there were 1,679 crashes (0.4 percent of the total) involving police, ambulance, or fire vehicles. These crashes tended to be more severe than the average crash. The same proportion of crashes resulted in death, but nonfatal-injury crashes were overrepresented (34.8 percent versus 25 percent). Almost 7.5 percent of crashes involving emergency vehicles were coded as intersection crashes, compared to 55.6 percent for crashes overall. Interestingly, almost 45 percent of emergency vehicle-involved crashes were at intersections with both vehicles traveling in the same direction. Only 22.1 percent of crashes overall had that configuration. Another 34.1 percent of the emergency vehicle-involved crashes were same direction, non-intersection.

Hierarchy of IVSAWS Application Situations

These analyses show that there is much we do know about crashes that might be prevented by IVSAWS application, but there is still more that remains unknown about these crashes. The following table provides a ranking of the 12 IVSAWS situations detailed in this report according to the crash data and a final hierarchy ranking based on the crash data, professional estimates of crash occurrence (based on experience rather than hard data), and an understanding of how IVSAWS technologies might be implemented and used in the field. Following table 1 is a brief discussion of the rationale for the final IVSAWS application rankings.

IVSAWS applications were ranked based on actual crash exposure and overall utility of the IVSAWS application. The “overall” utility ranking was based on the number and severity of crashes, the number of transmitters that would need to be deployed, and the general applicability and utility of IVSAWS technology for affecting crashes in each scenario. Note that in particular, a mayday capability would greatly facilitate the disabled vehicle scenario, but at the time of the ranking, the IVSAWS concept presumed that the motorist vehicle unit would be a receive-only unit. Obviously, this final ranking criterion is subjective. The specific rationale for the ranking of each scenario is provided in the following section.

Table 1. Rankings of possible IVSAWS applications.

IVSAWS Application	Crash Data Rank		Overall Rank
	Crash Freq.	Injury Severity	
Signaling emergency vehicle presence	5	2-3	1
Railroad grade crossings	6	1	2
Multiple (compounding) hazardous conditions	3	2-3	2
Highway construction zones	2	5-6	3
Supplemental traffic control device	Not Applicable	Not Applicable	4
Crash site—police activated	Not Applicable	Not Applicable	4
School bus or other special vehicle hazard	4	4	5
Temporary detour routes	Not Applicable	Not Applicable	5
Disabled truck at roadside	Not Applicable	Not Applicable	6
"Mini-zones" involving roadside work	Not Applicable	Not Applicable	7
Traffic backups	Not Applicable	Not Applicable	7
Accident-involved or disabled vehicles	1	5-6	8

Rank 1: Signaling Emergency Vehicle Presence

Crash data show that scenario represents a very small portion of all crashes, but that injury severity from these crashes is greater than for crashes overall. The configurations of the crashes in the data analysis (i.e., predominantly same-direction intersection, and same-direction non-intersection) suggests that drivers may not be aware of the presence of these vehicles as they approach, despite the lights and sirens. Thus, an IVSAWS message may provide them with additional information necessary to prevent a crash. The number of vehicles that would require IVSAWS transmitters is limited to the number of emergency vehicles in the population (presumably a manageable number). Full penetration of IVSAWS transmitters and/or receivers is not necessary for the benefits of this application to accrue, because these systems would provide a supplementary warning to sirens and lights. In addition, benefits of preventing emergency vehicle crashes go beyond the crash incident itself. That is, when an emergency vehicle is involved in a crash, some emergency need is not met in a prompt manner, perhaps resulting in unnecessary property loss or additional personal injury.

Rank 2: Railroad Grade Presence

The probability of a car-train crash is quite low; however, the results of such crashes are disproportionately severe. The crash data also show that car-train crashes occur disproportionately at night in rural areas (many of which are probably unguarded crossings). This suggests that a supplemental warning could be effective in preventing these crashes. IVSAWS transmitters would only have to be installed on the lead engine of each train. This should not pose an unreasonably large burden. Messages transmitted from the trains could be totally unambiguous and standardized. These are also probable benefits on the train-side of the crash situation, especially when hazardous cargoes are involved (i.e., special hazardous commodity codes could be encrypted onto the transmitted message).

Rank 2: Multiple (Compounding) Hazardous Conditions

Crash data were not available for the majority of the situations that fit this scenario, but the data that are available (i.e., fog, slippery conditions, and vertical or horizontal curvature) are compelling. It is certain that there are many more crashes that involve multiple hazardous conditions than could be readily identified by the crash data. This is a rich domain for safety and traffic engineers who could tailor IVSAWS messages to suit the local problems. The number of sites for transmitter deployment need not be excessively high. In fact, not every potential site should be instrumented. Sites should be selected based on identified needs from crash experience (of course, this would require adequate record keeping). Many of the multiple-hazard scenarios are likely to include excessive speed as one of the compounding conditions. An IVSAWS system that relays a warning only to vehicles traveling over some predetermined "safe" speed seems to constitute a valuable and practical application of IVSAWS deployment.

Rank 3: Highway Construction Zones

This is a valuable application of IVSAWS because construction zone crashes present a hazard not only to vehicles traveling through the zone, but also to workers in the zone. A significant number of crashes are reported to occur in construction zones, but not so many zones that transmitter deployment should be overly burdensome. Construction zones also present an ideal IVSAWS application opportunity because we know precisely where the site is; we know much about the hazards associated with the site; and the zone is not permanent, thus reducing possible habituation effects. In fact, as the characteristics of the zone change, it should be possible to change the characteristics of applicable warning messages, further reducing habituation.

Rank 4: Supplemental Traffic Control Device

No crash data were available to describe the extent of the hazard that these situations cause. However, it is not difficult to think of situations where signals or signs have been changed or disabled for one reason or another that have the potential for creating traffic conflicts. IVSAWS would serve as a supplement to existing signals and, thus, it would represent an additional safety message to equipped vehicles. Unequipped vehicles should not be negatively affected by the lack of an IVSAWS warning. The safety value of such a system cannot be determined precisely in the absence of crash data, but the value for crash prevention is probably quite low.

Rank 4: Crash Site - Police Activated

Limited crash data are available to describe the potential for this application to prevent crashes. However, the potential for such a system to inform drivers of an upcoming crash site (and possible lane blockage, debris, etc.) is appealing. Such a system may involve the active deployment by officers in the field to select the message, signal direction and strength, transmitter placement in the roadway, and perhaps other features. If the system were burdensome to the officers, they might not be prone to use the system. Such a system may be combined with the emergency vehicle alert system mentioned previously. If this were feasible, the utility of the total system would be enhanced. If this system required a separate transmitter, it would represent perhaps a doubling of the cost of IVSAWS installation to police agencies.

Rank 5: School Bus or Other Special Vehicle Hazard

Crash data show that school bus crashes are relatively rare events, and if additional signaling would be beneficial in preventing the few that do occur, given the large number of buses that would have to be equipped, it is unclear if the cost (and the problem with frequent and redundant signaling) is worth the benefit that may be derived. For other special vehicles, such as rural mail carriers (see example in previous section), the utility of an IVSAWS system is less sure.

Rank 5: Temporary Detour Routes

No crash data were available to determine the threat of safety that is presented by temporary detour routes. In fact, temporary detours are themselves not threatening, but the conditions they create may be. Thus, these threats may be conceived as fitting into more specific IVSAWS applications. On the other hand, IVSAWS applications as markers for a temporary detour could be useful as temporary route guidance technology. Until there is 100-percent market penetration, these IVSAWS route markers would have to be used as supplements to traditional detour markers.

Rank 6: Disabled Truck at Roadside

Specific data on the hazard created by disabled trucks at the roadside were not available. The most significant problem with this application is the large number of vehicles that would have to be equipped with a transmitter. In addition, IVSAWS information would only supplement existing use of flares and reflective triangles. It is unlikely that the benefits derived from the system would approach or exceed the costs of deployment.

Rank 7: "Mini-Zone" Involving Roadside Work

Through conversations with several utility companies, it was determined that "mini-zones" do not create any special crash hazard. Therefore, IVSAWS application is unwarranted for these situations.

Rank 7: Traffic Backups

No crash data were available for describing the extent to which traffic backups create a significant traffic safety hazard. At best, this application is a subset of the construction zone or police-activated systems. Recurrent traffic backups are not suitable for IVSAWS application because of the potential for habituation effects.

Rank 8: Accident-Involved or Disabled Vehicle

Although a large number of crashes seem to involve vehicles stopped in the roadway for some reason, the crash data are unclear on the reason why these vehicles are stopped. It is unlikely that many were stopped for reasons other than a crash or the vehicle being disabled. Even if all of these crashes did fit the original scenario, the cost of deploying an IVSAWS transmitter and receiver in every vehicle is likely to exceed the benefits derived from such deployment. This negative conclusion is strengthened when one considers that a higher than expected proportion of crashes involving vehicles stopped in the roadway involve minor injuries and a lower proportion of these crashes involve serious injuries.

Ranking Summary

In sum, it may be most useful to consider the 12 IVSAWS application situations described in this report as fitting into 1 of 3 categories. The highest priority category included IVSAWS applications for:

- Signaling emergency vehicle presence.
- Railroad grade crossings.
- Multiple (compounding) hazardous conditions.
- Highway construction zones.

These applications are most likely to provide a significant safety benefit and reasonably tit the IVSAWS application concept. The second tier of IVSAWS applications includes IVSAWS as:

- A supplemental traffic control device.
- Police-activated crash site IVSAWS.
- School bus or other special vehicle signaling.
- Signaling at temporary detour routes.

These applications have only limited and highly speculative crash-reduction potential. The lowest priority category includes IVSAWS for:

- Disabled trucks at the roadside.
- Traffic backups.
- Mini-zones.
- Accident-involved or disabled vehicles.

Each of these applications has even more limited or speculative crash-reduction potential than the second priority situations, and the costs associated with equipping all heavy trucks and passenger vehicles are prohibitively high.

SIGNALING PRESENTATION ANALYSIS

The results of these first five subtasks of task B are contained in the University of Michigan Transportation Research Institute (UMTRI) final report dated March 199 1. The subtask 6 effort was concerned with the identification of methods, modes, and formats for warning signaling (warnings and regulatory signs) and for message presentation to the driver. The recommended icon/signing and message content of the subject signals were defined under subtask 5 of the UMTRI report and were based on analyses of crash data and the driver information needs implied by crash documentation.

Subtask 6 efforts were focused upon four signaling categories and parameters as follows:

- The use of visual mode displays and indicators presenting combinations of graphic symbols (icons), color, and text.

- The use of audio mode presenting tones, audio symbols, and/or synthesized speech.

- Driver control of alert signaling parameters and modes, including driver override, message acknowledgment, and/or message repetition commands.

- The length and signaling intensity of messages to be presented to the driver.

Approach to Signaling Presentation Analysis

The technical approach for subtask 6 was initiated with an analysis of existing vehicle signaling parameters followed by research within relevant literature. These definition tasks were conducted without benefit of objective testing or other empirical validation. The approach was constrained by the following: (1) the limitations of preceding subtasks; (2) calendar time and manpower

resources; and (3) an extrapolated baseline hardware concept. In an effort to adjust to these constraints, certain working procedures were adopted as follows:

- Review UMTRI subtask 5 documentation and rationale.
- Review related technical literature and engineering guideline data.
- Select and/or formulate rules for allocation and design of alerting messages, signaling functions, and driver control of those functions.
- Conduct preliminary design of messages, signaling formats, and driver control modes.
- Recommend further work to design actual formats and to validate and improve those formats.

Figure 3 illustrates the analytic process and the study task interrelationships for subtask 6. The following assumptions underlie the analyses described herein and the associated recommendations:

- IVSAWS sensor and telemetry subsystems will provide reliable and detailed information inputs to support the driver alert and information/advisory display requirements.
- The conclusions and recommendations of subtasks 4 and 5 were generally well founded and represent valid grounds for continuation of subtask 6.

Human Engineering Analysis

The Hughes human engineering analyses were initiated during the task B effort via telephone contacts and a visit to the UMTRI office in Ann Arbor, Michigan. As part of this analysis, appropriate crash data were collected for the crash scenarios. In addition, the analysis suggested that warning and regulatory signs to be provided to drivers should be identified in very general terms. Formal human engineering analysis began upon conclusion of the preliminary task B, subtasks 1 through 5, report.

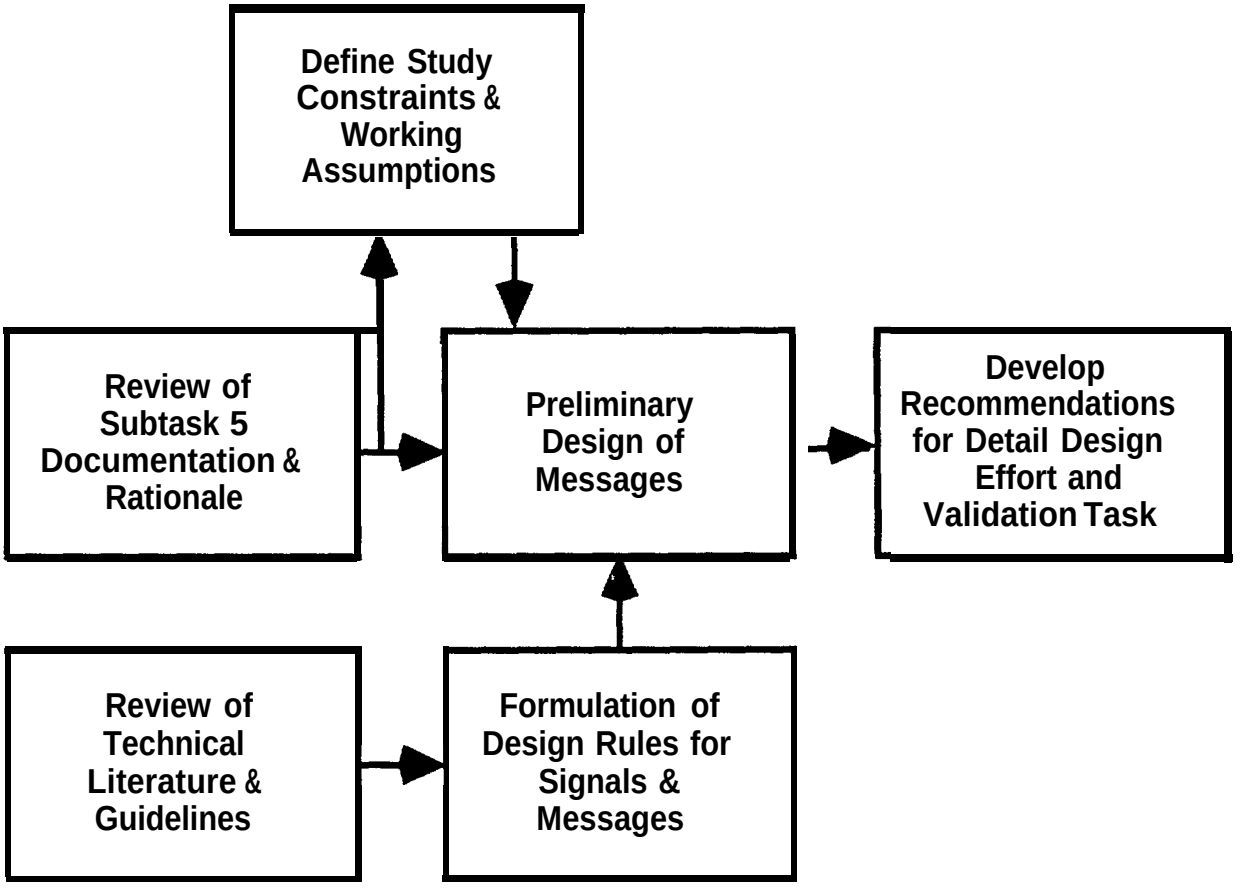

Figure 3. Task B, subtask 6 technical approach.

Review of Subtask 5 and Derivation of Alerting Messages

Results of subtask 5, as reported in the UMTRI task B final report, did not provide specific recommendations for warning messages or signal content.111 Rather, the output of subtask 5 was a general recommendation against the "....strategy of replicating the ***Manual of Uniform Traffic Control Devices (MUTCD)...***" for most of the IVSAWS applications. Two exceptions to this advice were further considered. Those exceptions were: (1) railroad grade crossings and (2) supplemental traffic control devices. The rationale for these exceptions was based upon driver familiarity with the railroad crossing symbol and stop or yield signs. Other identified crash situations (e.g., multiple hazardous conditions, traffic backups, etc.) present novel signing requirements for which icons/pictograms would have to be developed, tested, and validated on significant driver population samples.

This rationale was acceptable to the IVSAWS expert human factors evaluation team who were familiar with the automobile community concerns regarding instrument panel space and new "telltales" (icons). These same **IVSAWS** human factor evaluation personnel had been designing and evaluating new icons for anti-lock braking systems (ABS)/traction control systems (TCS) and were in the process of validating conclusions. International Standards and Organization (ISO) symbols that identify ordinary vehicle functions and that have been used for many years, still achieve low levels of understanding when restudied.1141 Of interest to this study were the results obtained for the hazard warning icon (double triangle). When asked to write their understanding/definition, 24.6 percent of the sampled population answered correctly. When

recognition was tested by matching the symbol with the stated function, 61.8 percent were correct. It is apparent that symbol recognition is not easily attainable within the driver population.

After consideration of the learning requirements placed upon drivers and the relative infrequency of use of the IVSAWS signals, analysts conducting the subtask 5 effort recommended against the use of MUTCD symbols and against the development of similar icons, at least for the small number of accident situations studied in this program. Rather, it was noted that IVSAWS signals should not only alert drivers to hazards, but should advise them of appropriate actions to avoid crashes. It was conjectured that simple icons would (probably) not provide adequate message detail for these dual purposes.

With regard to the allocation of messages to visual and auditory sensory channels, subtask 5 concluded that any decisions toward message allocation "... must be based on rigorous human factors and behavioral testing." Resource limitations did not permit rigorous studies under subtask 6. Rather, this subtask focused on the derivation of message content and identification of various system considerations to be accounted for as detailed design of display indications proceeds. The selection of the appropriate driver alert warning system (DAWS) display was scheduled to occur during the conducting of task E.

Although sufficient resources do not currently exist to perform a rigorous study of relevant pictograms representative of identified IVSAWS situations, the study team experience with special symbol design for air defense and air traffic control systems, as well as reported studies, infers that appropriate pictograms can convey information more rapidly than text.1191 For this reason, the use of selected or newly designed symbols, icons, or pictograms should not be totally eliminated.

Message Content for Alerts and Action Advisories

In the absence of explicit definitions of alerting messages from subtask 5, it was necessary to derive a basic set of messages through the review of earlier tasks. The ranked IVSAWS application categories were selected as the basis for generating a working set of alerting messages and associated action advisory phrases.

As this review proceeded, it was recognized that slight variations in the accident cases studied would have substantially different implications for both alerting messages and action advisories. Moreover, some of these variations would be highly probable if the situations were to occur in different locations and/or at different times. For example, the presence or absence of adequate roadside space for safe traffic egress has extreme implications for the type of advisory message associated with the presence of an emergency vehicle. Where roads are bordered closely by deep trenches or soft shoulders, drivers must be directed to remain in traffic lanes during emergency vehicle transit. Where roadside egress and parking space is available and time permits, drivers should most probably be directed to pull off to the side and stop until emergency vehicles have passed. For this reason, some level of free text should be associated with each advisory message.

The effects of driver advisories will also be sensitive to such questions as the reliability of alerting sources and the timeliness of inputs. For instance, signals activated by “mini-zone” road crews would probably be less timely, valid, and reliable than signals activated by highway police, Experience with unreliable signals and false alarms could undermine driver confidence. If the timeliness and reliability of sources cannot be ensured, it may be desirable to indicate the source as part of the alert code.

Vehicle Interaction and Timing of IVSAWS Signals

Two other major considerations in definition of message content are: (1) the availability of IVSAWS signals to other drivers in the hazard area, and (2) the time relationship of signaling and reception in the context of traffic interaction and vehicle closure rates. The efficacy of IVSAWS signaling strategies and the content of action advisories depend critically upon the assumption that all vehicles in the hazard situation will have received and correctly perceived the appropriate signals.

Figure 4 illustrates this point with an emergency vehicle alert situation. The figure depicts an emergency vehicle (EV) approaching an intersection under code 5 conditions. The driver of interest (D) has been alerted that the EV is approaching from ahead. The recommended action is for the driver to pull over to the right shoulder and hold along with other vehicles in the traffic pattern. However, if one of those vehicles (V) does not get the IVSAWS alert, it might be expected to continue on through the intersection, causing the EV to steer further left into our driver's stopped vehicle.

Situation Awareness

The human factors concept of "situation awareness" provides a useful perspective for review of such complex events. The concept was developed for design studies of military combat aircraft and it provides for consideration of the "cooperative" case, in which all participants get the signals and respond accordingly, versus the independent "non-cooperative" case, illustrated here.

Signal Timing and Synchrony

The outcomes of traffic scenarios, such as the one depicted in figure 4, are notoriously sensitive to timing factors. It is obvious that slight differences in closure rates have diverse implications for system success, Perhaps less obvious is the fact that slight differences in initiation and duration of IVSAWS signal transmissions may negate the value of the signal. It is even feasible that premature transmission of a signal (e.g., by early setup of supplemental traffic control devices) could change the traffic situation so dramatically that predicted outcomes would fail to occur.

Automation of time-sensitive systems typically requires provision for substantial feedback and adaptive adjustment. The derivation of alerting signals and message content should take into account these timing factors. Human factors task/time studies are typically embedded within or supported by system timing analyses. In the current program, human factors specialists are especially concerned with the driver's control/action response-time requirements (e.g., time required to switch from acceleration to braking action).[6] The time required to detect and interpret IVSAWS signals and advisories must be added to the braking response time to determine the allowable time parameters for transmission, display, and driver action response. Thus, the size of the message interacts with the time window and extremely time-critical messages must be more condensed than other signals. Currently, the subtask 6 team has insufficient information to enable precise decisions on signal timing and message compression.

Signal and Message Enumeration

The list of alerting and advisory messages in subtask 6 was generated in accordance with the above considerations and the assumption that all traffic-event participants would have reliable and timely IVSAWS inputs. This list was used to continue the subtask 6 activity, but it should be viewed as a tentative set that requires further disciplined review before any final message/alerting system is sanctioned. In fact, as a study aimed at rural considerations, certain situations such as "slow farm vehicle" were omitted from the subtask 1 through 5 statistical

considerations. Table 2 presents the results of this preliminary message definition with "xxx" used as potential free-text, fill-in messages.

Some Psycholinguistic Considerations

In preparation for the current project, it was not planned that psycholinguistic analyses would be conducted. However, it was recognized that human factors engineering procedures for message derivation and symbol design must account for certain semantic and syntactic aspects of the linguistic medium for communicating the messages. It was only after closer consideration of the possible variations in situational nuances that the extreme importance of road signage and driver linguistics was recognized.

The language of the various traffic systems across the country is richly diversified. It contains multiple terms and phrases with identical meaning, as well as some phrasings for which the intended meaning can vary greatly, depending upon the situation. Thus, from the perspective of language science and psycholinguistics, current traffic system language includes both redundant and some ambiguous terms and phrases (i.e., driver's manuals, roadside signage, popular driver's usage). Of these two characteristics, redundancy is less of a problem than ambiguity. In many situational contexts, ambiguous messages are imprecise signals that can be substantially worse that no message at all. Signal ambiguity is especially unacceptable in traffic situations where there is little or no time available for considering alternative meanings.

One objective of the current program is to design precision into the signals presented to drivers, but it is noteworthy that the program also has the potential for increasing the ambiguity of the traffic system language. As an example, phrases such as "supplemental traffic control device" and "multiple (compounding) hazardous conditions" do not have immediate meaning to the average driver. In fact, words such as "supplemental" and "compounding" might be devoid of intuitive meaning to marginally literate drivers or even to the highly literate for whom English is a second language.

Subtask 6 has highlighted the importance of psycholinguistic considerations in the design of alerting messages. However, time constraints and other resource limitations have precluded further development of a comprehensive and unambiguous traffic system language for IVSAWS use.

Review of Technical Literature and Engineering Guidelines

Subtask 6 began with a brief review of technical sources on human factors in the design of alerting messages, graphic symbols, and related topics. The sources covered are listed in the reference section of this report. Guideline topics derived from these sources are summarized in table 3. The process of deriving detailed guidelines from these sources are continued through to the accomplishment of task E of the IVSAWS study.

Rules and Considerations for Sensory and Action Advisories

The issue of sensory channel allocation was addressed briefly during subtask 6, but it was acknowledged that more detailed consideration of the problem would be required. The following observations and interim conclusions were derived from the study:

- The choice of driver's sensory input channel should take into account channel capacity and task loading at the time of an alerting incident. This consideration requires that a task-time analysis be conducted to define the probable attention loading, action demands, available response time, etc. for the different classes of hazardous incidents.

Table 2. Tentative IVSAWS alerting messages
(derived from analyses of subtasks 3 and 4.

IVSAWS Applications	Alerting Messages	Action Advisory
Emergency Vehicle (EV) Presence	EV ahead/stopped EV approaching EV near, location unknown	Slow down stop Pull over to right & stop
Railroad Grade Crossings	RR grade crossings ahead	Prepare to stop
Multiple (Compounding) Hazardous Conditions	Hazard situation ahead Hazard situation in area, location diffuse	Slow down Slow to xx mph stop Merge right Merge left Pull over to right & stop Pull over to left & stop Change lane & slow Accelerate to xx mph Turn on headlights Turn off headlights Remain in vehicle Leave/abandon vehicle
Highway Construction Zones	Construction zone ahead	Slow down Prepare to stop stop
Supplemental Traffic Control Device (STCD)	STCD ahead STCD in area, location is uncertain	Be alert to unusual traffic control signals/devices
Crash Site — Police Activated	Crash site ahead Crash site in area	Slow down stop Change lanes (right or left) Turn (right/left) at next intersection
School Bus or Other Special Vehicle (OSV) Hazard	Bus or OSV ahead Bus or OSV in area	Slow down Prepare to stop stop
Temporary Detour Routes	Detour(s) ahead	Slow and take notice of detour instructions
Disabled Truck (DT) at Roadside	DT ahead at roadside on the right DT ahead at roadside on the left	Slow and avoid right side of road Slow and avoid left side of road
Mini-Zones Involving Roadside Work	Roadside work ahead	Slow down Prepare to stop stop
Traffic Backups	Traffic queue ahead Traffic queue in area	Be alert Slow down Turn to alternate route (xxx)
Accident-involved or Disabled Vehicle(s)	Accident-involved or disabled vehicle ahead	Be alert Slow down Turn to alternate route (xxx)

- Under certain conditions, audio alerts are more commanding and result in faster reaction times than do visual signals. Therefore, if ambient acoustics permit the use of audio alerts, they are to be preferred over purely visual signals, at least for the purpose of commanding the driver's attention.

- If favorable acoustics and low ambient noise levels cannot be ensured, a combination of audio and visual signals (bisensory display) should be employed.

- Lengthy audio messages are to be avoided. It may be prudent to develop a system of "audio icons," such as emergency vehicle sounds, railroad crossing bells, etc. In some instances, brief salient audio symbology could contain both the alerting signal and the appropriate action advisory message (e.g., simulated Doppler effects combined with, loudness, phase, and time-of-arrival modulation [of binaural signals]) could indicate the speed, proximity, and direction of approach of emergency vehicles, thereby suggesting the speed or direction of the driver's response to avoid conflict.

Table 3. Alerting-message design guideline sources.

Message Design Principles or Guidelines	Technical Literature Sources
Visual Coding Parameters	References 2,5,9, 10, and 19
Using Text vs. Symbols	References 2,5, and 9
Mixed Text and Symbols	References 4,5, 15, 17, and 18
Physical Dimensions of Signals and Message Dynamics	References 2, 5, 15, and 16
Location of Signals	References 2,5, 10, 11, and 16
Text Abbreviations	Reference 15
Audio vs. Visual	References 10 and 13
Bisensory Signals	References 10 and 13

- For extreme cases, where instant attention of the driver must absolutely be ensured, it may be desirable to provide touch or pressure sensory inputs (e.g., vibration of the steering wheel grip surface or of the seat cushion).

- Detailed design for visual display of advisory messages that accompany the alerting signal should consider the driver's visual adaptation level, other visual task demands, parameters of ambient illumination, and the driver's most likely points of fixation at the time of the alert.

- Any work on audio or bisensory signal design must include consideration of interactions with ambient conditions and possible related perceptual conflicts. For example, multiple signals from emergency vehicles, weather sounds, and traffic noise could interfere with audio-alert components and severely reduce driver reaction times.

Recommendations

The following paragraphs identify the human engineering recommendations with regard to alert signaling and advisory messages.

Messages, Signal Formats, and Control Modes

Recommended Messages

The recommended messages are those shown in columns 2 and 3 of table 2, Alerting Messages and Action Advisory. These messages are limited to the traffic cases analyzed in this study. Extrapolations should not be made beyond the current IVSAWS applications, as defined in reference 1.

Sensory Format

Pending more extensive study, it is recommended that alert signals and action advisory messages be presented in bisensory formats. Alerts should command driver attention regardless of where visual attention might be at the time of the alert. Action advisories should take into account other visual attention demands on the driver. In the absence of further data about driver attention and visual workload, it is prudent to plan for simultaneous audio and visual signaling.

Special Symbols/Pictograms

The design of special symbols/icons for presentation to a driver as a safety advisory/hazard alert should be considered carefully at this time. A unique symbol could cause confounding results during IVSAWS simulation and evaluation of the DAWS. The introduction of an additional variable, the new icon, without significant evaluation and validation, could detract from the evaluation of IVSAWS as an effective system. However, certain symbols have been present in public usage for signage purposes and may be considered as a viable pictogram. This would include railroad crossing and intersection signs. Others, such as emergency vehicles, have been represented by the symbolic "flashing" light. For this reason it is recommended that a subset of the DAWS evaluation during task E consider the use of a set of pictograms as the driver safety alert (existing ISO symbology was researched for representative symbols). An alternative subset could use text characters representing words associated with IVSAWS. This text could be "SAFETY ALERT," "HAZARD," or "HAZARD ALERT." The interpretation of this alert signal would be presented to the driver on the vehicle's driver information center display, where an advisory message would appear. The use of the two subsets, using 12 or more pictograms (versus text messages), could provide valuable information for the final DAWS recommendations.

Detailed Design Considerations

Detailed design of messages (e.g., length, content, etc.), potential graphic symbols, or pictograms, abbreviations, etc., must await further analysis of hazard situation timelines and driver task requirements. Driver decision/action windows will vary greatly from case to case. Graphic symbols and "audio icons" should be designed to fit these time windows and the relative sensory channel loading experienced at the time of each incident, It is recommended that detailed timeline studies, in conjunction with dynamic simulations, be conducted to identify allowable decision/action windows and requirements for synchrony of IVSAWS signaling with other situation events.

The psycholinguistic implications of the traffic system language should be considered during the performance of task E (the definition of the baseline DAWS system) and during task G (the test of IVSAWS with driver populations). This effort should identify potential sources of ambiguity,

confusion, and interpretive error. Preliminary results from task E mockup testing should then be applied to refine the language system, reduce reaction time, and minimize problem areas.
During task E, a human factors systems design approach should be applied to ensure that the legends, abbreviations, symbols, messages, and audio signals of IVSAWS are fully consonant with the audio/visual inputs from standard automotive instruments, gauges, etc. The DAWS design must take into account the features of the vehicle's primary control suite in terms of relative position, size, shape, operating logic, and dynamics. Therefore., it is recommended that human engineering be a continuing part of the system analysis and design of the total IVSAWS system.

CHAPTER 3. RESULTS OF THE DRIVER ALERT WARNING SYSTEM MOCKUP TESTING AND EVALUATION

INTRODUCTION

As identified in the workplan for IVSAWS, task E was performed using a static mockup environment. A minimal foam-core mockup environment was created for human factors testing. Empirical testing of selected symbols, or telltales, for driver recognizability, comprehensibility, and effectiveness were tested and evaluated using the foam-core mockup environment. Symbols were presented using both limited monochrome and color applications. Colors were selected based on probable hazard levels defined in report no. FHWA/RD-8 l/l 24 and in the IVSAWS task B University of Michigan Transportation Research Institute (UMTRI) report. The selected symbols were tested individually, as well as paired with blink, audio tone, voice, and text messages. The number of symbols and the various modes of presentation were limited, due to time and cost constraints. From the 12 hazard situations identified by the UMTRI report, 8 symbols were developed and tested.

Reach and vision analysis of the drivers in the static mockup utilized the information provided in Society of Automative Engineers (SAE) standards 5287, "Driver Passenger Manuals for General Rules on Arm Reach"; SAE Recommended Practice 51052 (1985), "Motor Vehicle Driver and Passenger Head Position"; as well as information derived from General Motors'and GM Hughes Electronics publications. The volumetric interior space within the driver's compartment and the positioning of the DAWS were simulated in the mockup. Candidate visual text displays and candidate auditory messages were selected based on task B and task C information.

These task E results describe the approach, method, and conclusions for the survey and analysis of the candidate DAWS system. This effort defines the analyses for driver symbol recognition, understanding/responses, and driver reach/vision.

RELATED TASK INTERRELATIONSHIPS

As part of the system engineering approach to the development of a comprehensive assessment and baseline design for the IVSAWS concept, task E — within the multiphase study — provides an initial evaluation of the basic research and data developed during the preceding study tasks. Task B, subtasks 1 through 5, provided the data for hazard situation identification and prioritization of the developed IVSAWS situations. Table 1 showed the hazard situations and the prioritization developed by UMTRI and applied to IVSAWS applications. In addition, analysis by the human factors engineering effort included recommendations for telltales and the context for driver visual and auditory messages. Previous tasks reviewed and selected an appropriate communications technology for alerting drivers to advisory and safety signing, and roadway hazards. These parameters were based on analyses of worst-case situations and on signal propagation distances.

The task E effort focused upon the following four signaling categories/parameters:

- The use of visual mode displays and indicators presenting combinations of graphic symbols (icons), color, and text.
- The use of audio-mode presenting tones, audio symbols, and/or synthesized speech.

- Driver control of alert signaling parameters and modes, including driver override, message acknowledgment, and/or message repetition commands.

- The length and signaling intensity of messages to be presented to the driver.

Task E was concerned with the application of the first two signaling categories and with the combined human factors and communications engineering results of the third and fourth categories. The human factors signaling presentation analysis resulting from task B, subtask 6 (shown in table 4), provided the basis for signal and message enumeration.

The columns entitled Alerting Messages and Action Advisories of table 4 provided the basis for text and audio messages used in the task E analysis. These messages formed a portion of the final recommendations of task B, subtask 6. Additional recommendations included: sensory format (to present advisory messages in a bisensory format to minimize driver attention and visual workload) and considerations for special/unique symbols for presentation to the driver. In addition to the concern for presentation of unique symbols, careful consideration for the positioning of a vehicle's primary control suite was recommended.

The concern for positioning of the DAWS, within task E, required not only consideration of task B recommendations for message formats and special symbols, but also the provision for estimated driver workload. Task C analyses combined the data from task B with the analysis of radio transmission/receiver characteristics, and estimated driver reception/response times.

Task C analysis provided analytic evaluation for IVSAWS Driver Alert Distances (DAD). The DAD is the distance from a hazard that a driver must be warned so that the driver can perceive the situation and respond accordingly. The Safety Hazard Advance Warning System (SHAWS) report showed that the DAD exceeds the distance at which the hazard first enters the driver's field of vision. As shown in figure 19 (chapter 5), the DAD consists of a warning generation time, a warning effectiveness period (Wp), and a Decision Sight Distance (DSD). The DSD is defined as the distance traveled during the period of time required for a driver to detect and recognize a hazard, decide upon a hazard avoidance response, initiate the response, and perform the maneuver. The time required and distance covered depend on the type of maneuver and the type of vehicle. The three types of maneuvers were designated increased attention, a lane change, and a full stop. The SHAWS report also tabulated preliminary results for the time required to perform a corrective lane change. Two vehicle types considered were passenger vehicles and commercial trucks. Combining the various factors yields an overall distance that is the IVSAWS communication range.

The DSD time was divided into two intervals: (1) the perception response time and (2) the hazard-avoidance maneuver time. These two parameters were evaluated for the hazard-avoidance maneuvers under consideration.

Task C identified that perception response times are determined through experimentation. Subjects perform hazard-avoidance maneuvers in response to simulated roadway hazards and the elapsed time is measured. Current literature from these experiments specify the perception response time to be 1.6 s. However, much literature exists on the topic of perception response times and estimates of a design value range from 0.9 s to 4 s, depending on road geometry and author opinion. The American Association of State Highway and Transportation Officials (AASHTO) recommends a design value of 2.5 s. Because the purpose of the IVSAWS study is not an exhaustive study of driver perception and reaction, the 2.5-s value was selected as a baseline for the evaluation of DSD and DAD.

Hazard-avoidance distances for the three maneuvers outlined above are listed in table 7 (chapter 5) for various vehicle speeds. Increased driver attention requires no vehicle maneuver and is assumed to be instantaneous upon driver perception of the hazard. The braking maneuver is assumed to be

a controlled stop on worn tires (2/32-inch (1.58-mm tread) over a wet paved surface without wheel lock up.

The DSD estimates were obtained by adding the 2.5-second perception-response time to the hazard-avoidance maneuver distances in table 7 (chapter 5). The additional elapsed time for the perception response translates into additional distance as a function of vehicle speed. The resulting DSD values are shown in table 8 (chapter 5).

Task C concluded that considering the sparse nature of literature about warning effectiveness periods for electronically generated invehicle warnings, a 6-s IVSAWS warning effectiveness period was a reasonable initial estimate. This could be verified or corrected during subject testing. Given this estimate, the IVSAWS warning units must repeat their broadcasts at least once every 6 s to ensure that drivers respond to IVSAWS warnings in a timely manner.

The overall conclusions and recommendations derived from tasks A through C formed the data base for the initiation of task E. Task B provided the identification and prioritization of vehicle crash and hazardous situations. It also provided the initial identification and recommendations of symbols/pictograms and the audio and text warning messages for the prioritized crash situations. Task C identified critical warning effectiveness timeframes and driver alert distances. Additional data provided by task D included the identification of the type of equipment necessary to demonstrate the communication architecture. For the preliminary design, the driver alert module recommended includes a symbol/icon display on the instrument panel, a speech synthesis unit with speaker, and a CRT display.

OBJECTIVE

The primary objective of the task E effort was to evaluate alternative signaling presentations, codes, and symbologies for driver alerting and to evaluate the DAWS positioning within the vehicle. The DAWS represents those components (hardware and software) resident in a vehicle that are used to convey information concerning advisory, safety, and hazard situations to the driver of the vehicle.

Previous tasks evaluated the relative importance of the human factors attributes in relation to the hardware/software aspects of the DAWS. For the purposes of the task E study, these human factors attributes were considered more important than the specific hardware/software attributes. Specifically, comprehensibility (e.g., understanding/interpretation), relative effectiveness (e.g., correctness of response, accuracy), human reliability (e.g., error control), and signaling format (e.g., voice, tone, text, and symbol) were considered to be of prime importance. Consideration of accessibility/location (e.g., ease of access) and physical attributes (e.g., size of buttons, character size) were secondary, but important, to the overall concept of the DAWS. For these reasons, a static mockup to evaluate the DAWS — although not conducive to accurate driver anthropometric measurements and to the establishment of an appropriate driver mindset — was considered adequate for the establishment of baseline DAWS information for follow-on tasks.

METHODOLOGY/PROCEDURE AND SUBTASKS

The testing of a static mockup DAWS was predicated on data derived from previous tasks. The candidate DAWS was tested in a static environment. Figure 5 shows a representative sketch of the mockup used for the testing of the DAWS. The task E workplan established three specific subtasks to be performed. These subtasks provided the baseline for the equipment used during

testing and the populations sampled, as well as the methods and procedures for the DAWS testing and evaluation. The subtasks involved DAWS design, DAWS testing, and preparation of a task E report. The details of these subtasks were:

(1) Driver alert warning system design:
- Selection of appropriate driver display — telltales/pictograms, heads-up display, CRT monitor.
- Define system parameters — display format and position, equipment arrangement, legibility, auditory alerts, voice output, accessibility.
- Soft mockup for test-bench design — standardization of display segments and voice/audio tone output, identification of hazard nomenclature.

(2) DAWS mockup testing:
- Review driver task data — report no. FHWA/RD-8l/l24, NHTSA task analysis.
- Test DAWS in static environment.
- Anthropometric analysis.
  Three subject groups — young, middle-aged, and mature.
- Test selected pictograms for recognizability, appropriateness, comprehensibility, and effectiveness.
- Reach and vision analysis.
- Evaluate candidate visual displays.
- Evaluate auditory messages.

(3) Prepare task E report:
- Summary of test and evaluation design.
- Report of evaluation process and results.

Establishment of Mockup and Test Methods

Based on the task E subtasks and tests to be conducted within a static mockup, an environment using a mockup constructed of soft foam-core and standard office furniture was used as the driver enclosure. This provided a designated “driver” area. A CRT display was provided as a driver interface. Within task E, the use of a heads-up display was not amenable to a static mockup. Therefore, a Macintosh II display was selected. The Macintosh permitted the use of visual text, as well as auditory tones and text using Supercard software. Through careful software programming, the Macintosh mouse was able to be used as a surrogate for a DAWS “turn-on” button for voice/displayed text messages.

The selected DAWS pictograms/symbols were programmed into the Supercard software as the test questionnaire was developed. The pictograms and questionnaire(s) are shown in the other volumes of this IVSAWS report. Pre-test trials identified corrections to the questionnaire prior to its use in the established test. The presentation of eight different pictograms to each tested subject involved six different formats that used pictograms presented in monochrome, then color, then associated with flash (four per second), audiotone, long voice/text messages, and finally

short voice/text messages. The pictograms used depicted the following elements identified as important hazards in previous tasks:

- Fire vehicle.
- Farm vehicle.
- Police vehicle.
- Emergency vehicle.
- Railroad crossing.
- Construction zone.
- Accident/crash site.
- Hazard alert.

Each of the eight pictograms was presented to the subjects using the six different presentation formats described above. A final set of presentations with alternating flash/blink between "Hazard Alert" and a selected pictogram were also used in the subject testing. The pictograms that alternated with the "Hazard Alert" pictogram were: "Emergency Vehicle," "Railroad Crossing," and "Farm Vehicle." This form of presentation had been suggested by expert environmental activities staff at General Motors.

The test subjects were selected from personnel in the Fullerton, California area. The subjects were asked to identify sex, age group, and physical height. Educational level was not requested, however, the subjects were drawn from different job areas (i.e., clerical workers, hourly production workers, and engineers) for a total of 13 test subjects with representation in three age groups (e.g., young - 16 to 30 years of age (four persons), middle aged - 31 to 50 years of age (six persons), and mature - 51 years of age and older (three persons)).

Test Procedures

At the onset of task E, it was recognized that a static mockup would provide minimal automotive fidelity and that the DAWS would be a new system not within the experience of the test subjects. For this reason, the introduction to the test questionnaire provided a description of the IVSAWS Program and an introduction to the task E DAWS evaluation (see appendix G in volume III of this series for further descriptions of human factors test procedures/sample questionnaire). In addition, only two of the eight pictograms presented ("Railroad Crossing" and "Construction Zone") were expected to be familiar to the subjects. For these reasons, a subjective, free-text response questionnaire was used.

Pre-test trials identified that subjects completing their own questionnaire while viewing the presentations would transcribe their comments in detail for each subset of pictograms. The time for completion for the pre-test group ranged from 1 h to l-1/2 h when allowed to pause, verbalize, and then write comments or answers. During actual testing, subjects were allowed the choice of completing their questionnaire or allowing the test monitor to transcribe their answers and comments. In both cases, ditto marks (") were permitted for similar responses rather than completion of repetitive comments.

Test subjects were brought into the human factors laboratory testing area on a scheduled basis and introduced to the DAWS mockup. Each subject was first asked about their computer familiarity. Although the interface with the DAWS test required minimum action on the part of each subject, a common set of instructions were used during the introduction phase. To change the presentation, the subject was required to press the "RETURN" key on the test computer. During the fifth and sixth subsets of each presentation, the subject was required to reach for and press the "MOUSE BUTTON." The last page of the questionnaire was always completed by the subject. This page provided the subject with the opportunity to summarize reactions and understanding of the DAWS presentation and to rank the presentations based upon the subject's preference.

The test procedures followed this sequence of events:

Introduction to the soft foam-core mockup and equipment.

Introduction to IVSAWS.

Introduction to the process for responding to the presentation.

Test monitor gives the subject the questionnaire and requests that the subject read and complete the first page and continue on to the second page.

Test monitor answers any questions asked by the subject.

Test monitor encourages each subject to consider the potential rural or urban setting during testing and for the use of the DAWS.

Test monitor asks subject if he/she will complete the questionnaire. If the test monitor is to transcribe the subject's responses, the subject is told that some clarification may be required to ensure accuracy of response.

Test monitor states that presentations will be numbered 1 through 11. Sequences 1 through 8 contain subsets alphabetized A through F and sequences D and F will require an added action — the use of the mouse button to obtain the complete signal presentation.

Test is initiated by subject.

At completion of presentation 11, the subject is given the questionnaire or is asked to complete the last summary page.

The above sequence was followed for each subject. No subject appeared to be confused by either the use of the Macintosh computer or by the purpose of the test. Each subject provided a complete set of responses and no data were nullified. The time of completion for the 13 subjects ranged from 35 min to 1 h. The test monitor responded identically to similar questions asked by various subjects.

DAWS POSITIONING ANALYSIS

Since the static mockup contained minimal automotive fidelity, only subjective reach data could be obtained. In this regard, summary question number four requested the subjects to respond to the effect upon the driver (e.g., to have to reach for and press a key for additional information). Further questions refined the response by asking if the additional information was worth the added effort. In 10 of the 13 responses, the subjects felt that the effort was worth it. The three negative responses were from males, two in the 51 and older group and one in the 16-30 age group. The three individuals that responded negatively would reconsider if the "messages were more direct" or if the "button" was located on the steering wheel hub.

The analysis of the DAWS positioning required that existing automotive and military standards be reviewed to determine the causal anthropometric factors for appropriate human interface with the DAWS. In this regard, two primary factors must be considered: visual angle and reach distances. Each of these factors is somewhat dependent on driver positioning (the automotive term is "seat reference point" (SgRP) in the design realm of "occupant packaging") within the vehicle. For visual angle considerations, MIL-STD-1477A, Military Standard - Symbols for Army Air Defense

System Displays; and MIL-STD-1472D, Human Engineering Criteria for Military Systems, Equipment, and Facilities; and Campbell, J. L., Analysis of Alphanumeric Symbology Requirements for Automotive Displays, 1989, were used to provide a baseline for establishing DAWS requirements.

There is minimal disparity between the collected data. For visual acquisition and recognition of alphanumeric characters, a minimum subtended visual angle of not less than 15 to 16 minutes of arc when measured from the driver's eye in its normal viewing location is recommended. For symbology, a visual angle of not less than 25 minutes of arc is recommended. Distance considerations indicate that the viewing distance should be 508 mm. Therefore, symbols 609.6 mm in distance from the driver would be a minimum of 4.1 mm in height and for a distance of 914.4 mm the symbol would be 6.6 mm in height. These recommendations must also consider luminance, contrast ratios, and color usage.

For positioning purposes, the preferred downward, vertical angle for driver viewing would be 15 minutes of arc, not to exceed 30 minutes of arc from the driver's normal seated position. Within this context, the mature driver differs from the younger driver in terms of visual perception. For legibility purposes, concern for the mature driver must also consider accommodation, acuity, and glare sensitivity in addition to illumination requirements, contrast sensitivity, and color sensitivity. Each of these factors must be studied in relation to the ambient conditions, vehicle adjustment capabilities, as well as the DAWS visual presentation medium. These factors could not be studied in a static mockup environment.

The positioning of the DAWS also requires consideration of existing automotive standards and designs. SAE 5287, Driver Hand Control Reach (198 l), provides detailed numeric and location considerations within the automotive industry. The current SAE driver packaging model is depicted in figure 6. However, recent data studied by General Motor (R. Roe, unpublished, 1991) and UMTRI have identified that these data may require updating. Their preliminary data indicate that drivers are sitting more erect, thereby raising the eye range and moving the reach distances closer to the instrument panel. Current positioning data indicate that for a CRT placed within the driver's area of control, a maximum distance of 660.4 mm to 7 11.2 mm from the restrained driver's, non-extended shoulder provides the 95 percent boundary.

To further confound the ease of locating the DAWS, the majority of the automotive manufacturers have established an area to the right of the driver's instrument panel, near the vehicle centerline, that has become known as the Driver Information Center (DIC). This area, in some vehicles, contains an existing CRT or flat panel display used to present the driver with vehicular indications and controls for the radio, air conditioning, and various status displays. The heads-up display, in addition to the CRT, can also provide this capability. Limitations, such as cost, may preclude acceptance or validation since the heads-up display is still being evaluated.

To provide recommendations that are germane to the DAWS, all the above factors should be evaluated in depth. For the purposes of this study, a few indications derived from test subject comments are apparent. The alert symbology/pictogram should be located within the driver's normal visual angles; the controls for display of text and audio messages should be in close proximity to the vehicle steering wheel hub, but no further than the established vehicle DIC; and the visual text messages should be either within the DIC area or on a proposed heads-up display.

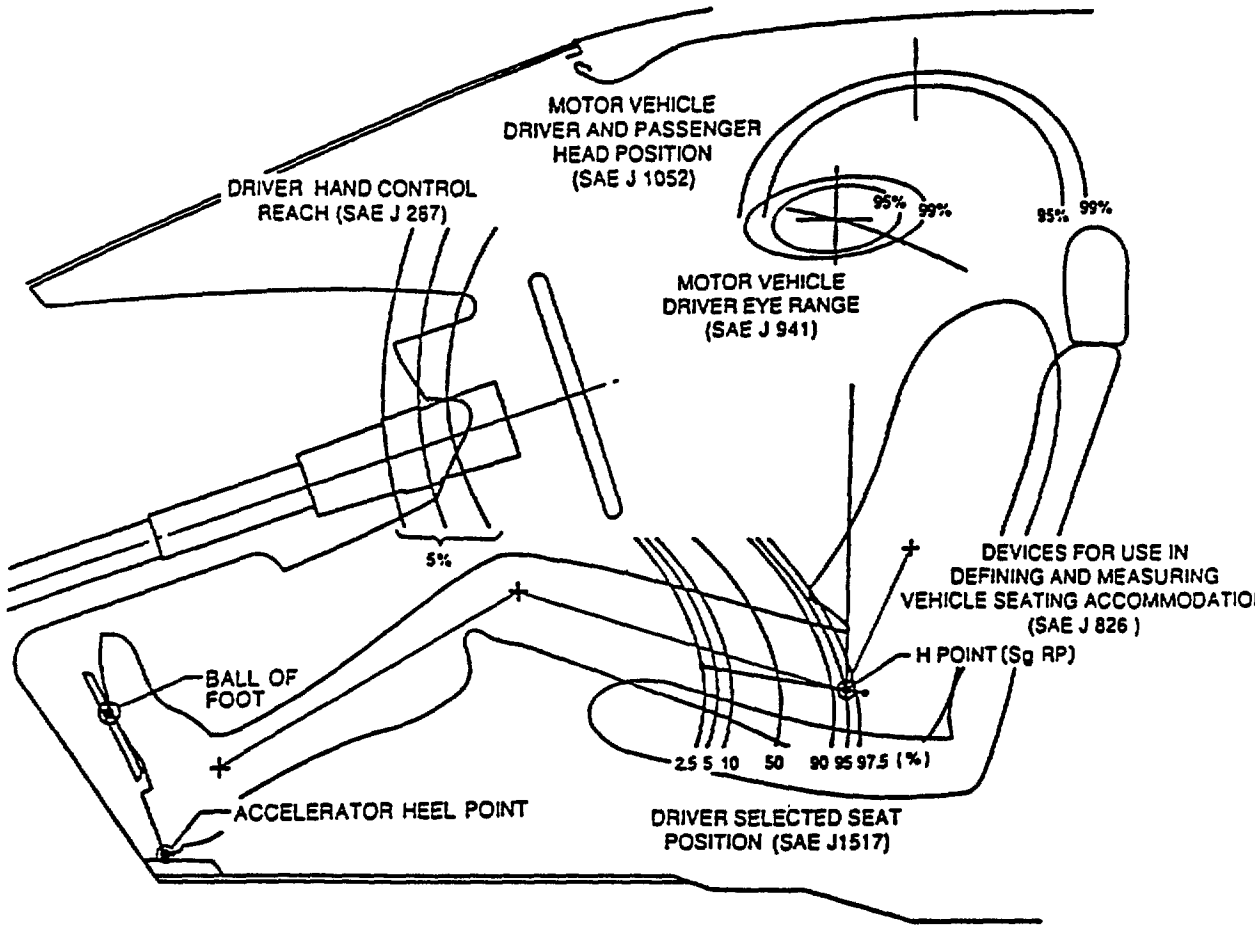

Figure 6. Current SAE driver packaging model.

RESULTS

This section of the report presents that results of the data derived by analysis of the test questionnaires as well as the subjective data provided by the test subjects. The following paragraphs and figures summarize the results of the IVSAWS DAWS task E symbol signaling tests and provide test data definition and interpretation.

Test data were of two metric categories, nominal and ordinal. The tables reflect the numerical analysis of the ordinal data (rank order judgments of the test subjects). The nominal data, including all commentaries and opinions, were reviewed for general impressions and for cues to better understanding of the ordinal data.

Analysis of Preferences for Signaling Options

At the end of the test sequence, each subject was instructed to rank the seven options in order of preference. Ranks were scaled from 1 to 7, with one being the most preferred. Results of these rankings were summed across all test subjects and averaged to obtain a mean rank preference value for each option. Standard deviations (S.D.) of rankings were automatically calculated for each

mean value obtained. Mean ranks were then numerically transformed to obtain Preference Index (P.I.) values (PI. = reciprocal of mean rank value = l/Average Rank). The P.I. metric has the advantage over the rank order in that the larger values reflect the stronger preferences. The definitions below provide the basis necessary for the interpretation of the preference figures that follow:

- Mean Rank - Each mean rank value is interpreted as the best estimate of the group's preferential ranking of each option.

- Standard Deviation of Rank Values - The standard deviation of rank value for each option is a mathematically inappropriate parameter, but since it was available as part of the data reduction software, it was calculated as a crude indication of the reliability of each mean ranking. As such, it provides an indication of the relative concordance of the group with regard to the ranking of each option. Larger S.D.'s indicate less group agreement and smaller S.D.'s are suggestive of more group agreement.

- Preference Index Values - The P.I. value for each option is interpreted as the test group's relative preference for that option. These preference values have no practical comparative meaning beyond the context of this study, i.e., they cannot be extrapolated to, or compared with, symbology experiments or surveys done in other contexts. They do genuinely reflect the test group preferences among the seven options in this static mock-up study. As such, these data represent a practical basis for screening out some of the least preferred options and for narrowing the scope of any future testing of this set of options.

- Within-Group Differences - Mean values and S.D.'s of subgroup data indicate that there may be significant differences in preference associated with gender and age level. Confirmation of these differences would require a more detailed study, with a larger and more strategically selected subject sample.

Although the population sample is small and not fully representative of the larger driver population, further analysis of the current data may be warranted. Data from the current study could be subjected to several additional calculations, some of which might confirm correlations between subgroup identity and certain preferences.

Preference Ranking and Average Values for Signaling Options

The overall preference index of the subject group is shown in figure 7. The categories labeled CTTVM (Color, [Audio Tone], Text, Visual, Message) were predominantly preferred by the subject group. The category Color + Blink, indicates a preference by the four female subjects. Of interest is the fact that except for these three categories, there was little disparity between the gender groups. The explanations offered by the female subjects in free text and conversation were that the blink or flash was interpreted to be the presence of a more immediate danger, that is, the blinking pictogram represented a danger closer in proximity to their vehicle and would thus require more immediate action. The male population believed that more information would be worthwhile, thereby allowing the driver to take the most appropriate action. The selection of the voice and text message options were interpreted to mean that the DAWS system would provide accurate advance information and thereby permit the driver to take the most appropriate action for the given option.

Figure 8 shows the mean rank and standard deviation for the subject group's preferences between the different signal options. In ranking the preference, a rank of 1 indicated first choice, while a rank of 7 indicated the least preferred choice. As defined earlier, the smaller the S.D., the more the agreement of the group for the given option. Again, the long message and short message text and voice options rank higher than the other options. The S.D.'s for these two options also show a relatively low deviation of agreement.

Figure 9 shows the preference by age group. This figure clearly shows that the preference for text and voice messages was more highly preferred by the 16-30 age group (Young), followed by the 51 and older age group (Mature). When compared to figure 10, preference by subject group, it can be seen that the larger male population contributed to the overall average. Within figure 10, the concurrence within the female population is shown by the high preference index for the color and blink option. This was verified as shown in figure 11, where only the female population distribution was considered.

In general, the results showed a preference for the voice and text messages associated with each pictogram. The variance accorded the female population group should be considered if a blinking or flashing pictogram is to be used. The free-text entries identified the rationale used by the subjects in their selections. Those comments most relevant to this study included the following:

- Blink/flash provided an inference that the hazard situation was in the immediate vicinity of the driver's vehicle.
- Message content should provide information not available from the pictogram presentation in and of itself.
- All pictograms were recognizable by the subjects.
- Several subjects indicated that they were more likely to pull over for a police vehicle due to the potential of receiving traffic citations.
- The majority of the subjects felt that they knew what action to take based upon pictogram presentation and an understanding of IVSAWS.
- The most confusing pictogram was the farm vehicle. Due to the profile depiction, subjects thought it represented a vehicle entering from a side road.

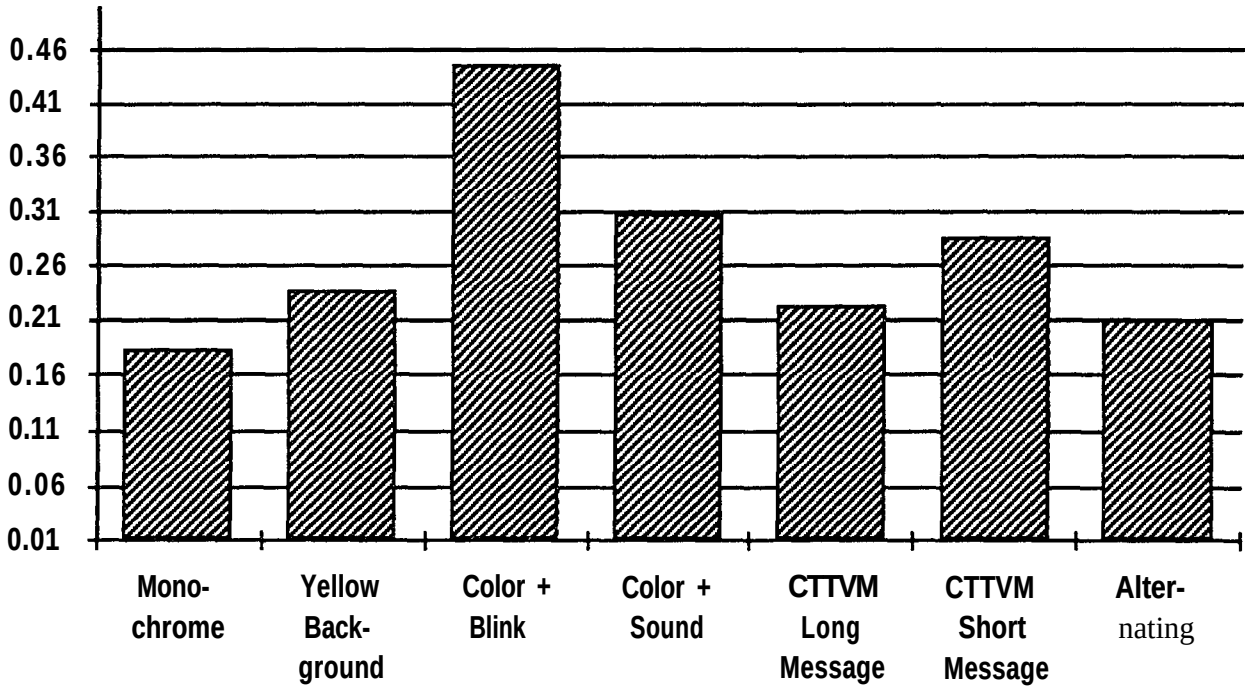

Figure 11. Preference index for female population group.

CONCLUSIONS/REMARKS

This effort employed new pictograms in a static mockup with minimal automotive fidelity. In addition, the DAWS system (as a new system) was not within the tested subject's experience. The latter point did appear to deter the subject's full participation and understanding of the test. The following major conclusions from the subject testing will support DAWS design/development:

- Overall, the subjects agreed that IVSAWS would be a substantial aid to the driver.
- There is general accord that the combined signals using color, text, audio tone, and voice messages would be most beneficial.
- There is general agreement that voice and text messages would provide more meaningful hazard/traffic recommendations (e.g., alternative routes, distance to the hazard, etc.) to the driver as opposed to voice only or text only.
- The subjects felt that reaching for an operational "button" would be acceptable if added information was provided beyond that presented by the pictogram.
- Individual pictograms were recognizable, but could be confusing. Special attention should be given to standardizing the symbols, especially if side and front views are mixed.
- The audio tone would be more meaningful if it represented the sounds associated with the expected emergency vehicle. In general, audio tones were associated with a need to attend to a function and, therefore, should not be eliminated.

- DAWS positioning within a vehicle should be guided by the extensive studies conducted by the SAE and the automotive industry.

The selection of appropriate symbols/pictograms should be studied further with some support from the membership of the International Standards Organization (ISO).

The placement of the DAWS system must also consider current vehicle designs and state-of-the-art options available in newer vehicles. As described earlier, newer data have shown a change in driver positioning and seat reference point (SgRP). This must be considered in relationship to options such as the heads-up display and to vision-enhancement systems. It is recommended that one or more of these options be considered during follow-on human factor engineering efforts.

CHAPTER 4. FREQUENCY BAND SELECTION ISSUES

OVERVIEW

IVSAWS provides hazard warning and other advisory information to motorists in both rural and urban settings. Transponders at the appropriate locations transmit messages to receiver units in IVSAWS-equipped automobiles. The message information is then presented to the driver (both aurally and visually). The Federal Communications Commission (FCC) regulates transmission power and frequency bandwidth of any radiating system operating in the public domain. The required transponder power is a fundamental function of three items — communication range, atmospheric losses, and terrain losses. The frequency bandwidth is a function of data rate and other system functions. Several analyses were performed in parallel to obtain these parameters (see figure 12). A computer model used these parameters also in order to determined an upper bound on the communication path losses for different combinations of link ranges, terrain features, and carrier frequencies. The combined impact of the link-loss analysis results, IVSAWS cost considerations, and FCC regulations yielded a final set of recommended frequency bands for the IVSAWS system.

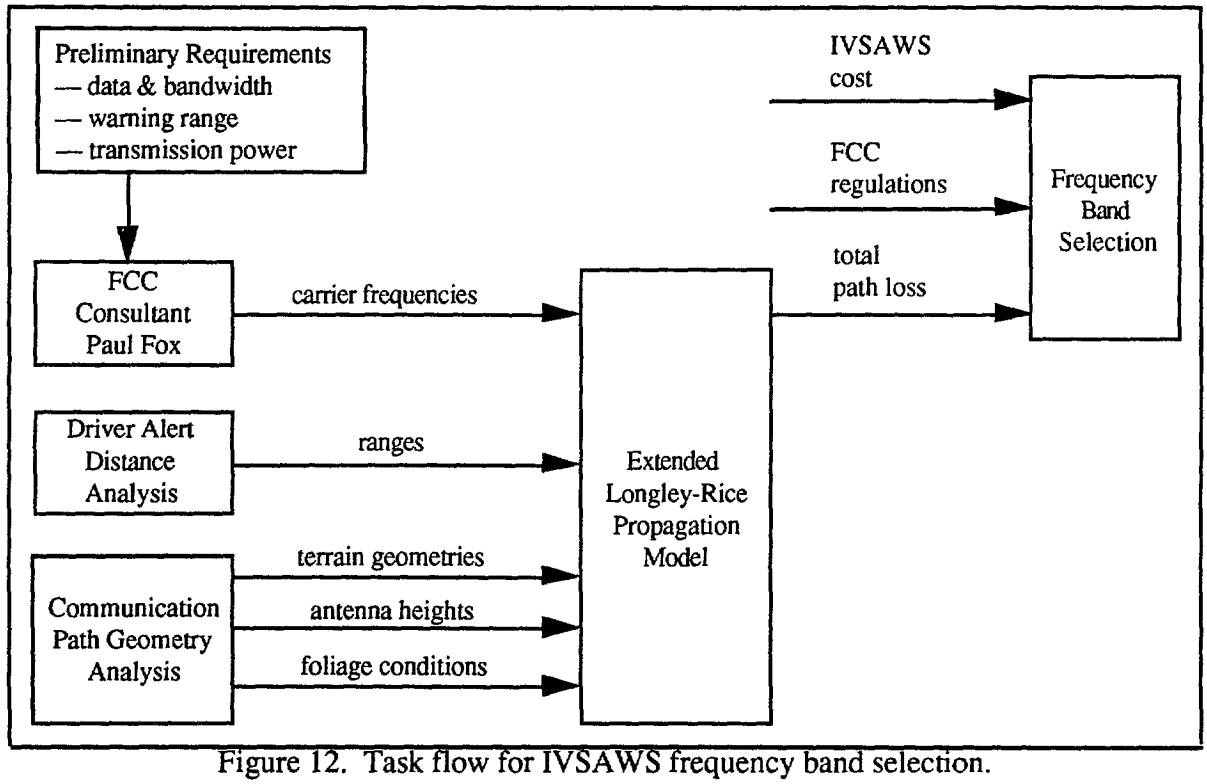

Figure 12. Task flow for IVSAWS frequency band selection.

FCC CONSULTANT

The search for frequency bands appropriate to the IVSAWS role was largely performed by a telecommunications consultant in Washington, DC. The consultant familiarized himself with the IVSAWS preliminary system requirements and with available vehicle telemetry systems. The

consultant then examined the electromagnetic spectrum for compatibility with IVSAWS bandwidth and transmission power requirements. Frequency bands occupied by “immovable objects” based on FCC regulations were eliminated from consideration. The consultant identified the remaining frequency bands with sufficient bandwidth and made appropriate recommendations for IVSAWS applicability.

The available vehicle telemetry systems are TRAVTEK, Teletrack, and Mertz. These systems all currently use the 902-MHz to 92%MHz frequency band. As a result of the analysis effort, interest was generated in the Hughes Vehicle Location System (VLS) and how the frequency allocation was obtained. VLS is a prototype system that is an outgrowth of the Hughes Position Location and Reporting System (PLRS) and, hence, currently uses the same military 400-MHz to 450-MHz frequency band allocation.

The preliminary bandwidth requirements were obtained by considering: (1) combined IVHS - IVSAWS requirements, (2) IVSAWS only with ranging, and (3) IVSAWS only without ranging, While IVSAWS can be a stand-alone system, its value to the driver will be greater and the costs lower if IVSAWS is part of a larger Intelligent Vehicle-Highway System (IVHS). IVHS will actually be composed of many systems ultimately requiring large bandwidths to support high data rates for detailed map information and vehicle guidance. For this type of data and the corresponding update rates, the IVHS bandwidth estimate is a minimum of 25 MHz. For IVSAWS with ranging, PLRS is a suitable reference point to determine bandwidth. PLRS uses a 5-MHZ spread-spectrum waveform to perform ranging between units. A 5-MHZ waveform has a chip duration of 200 ns. At 0.3 m/ns, the initial range estimate is accurate to 61 m. Early-late tracking circuitry then refines the PLRS accuracy to 1/10 of a chip or 6.1 m. On the other hand, if ranging is not included, then only modest waveform spreading to gain noise immunity would be required. In FCC allocations, normal narrowband channels are 25 kHz to 50 kHz wide. Estimating an IVSAWS non-ranging transmission as a 100-bit message once per second with an on-the-air rate of 1 kHz yields a 17-dB processing gain. These preliminary bandwidth requirements are listed in table 4. The consultant was directed to focus primarily on the IVSAWS requirements, but to provide some guidance on the impact of IVHS requirements on frequency band selection.

The preliminary transmission power was estimated by considering communication range and foliage loss. A worst-case hazard scenario upper bounds the IVSAWS communication range. The worst-case hazard situation involves a high-speed emergency vehicle approaching a high-speed commercial truck. Both vehicles are traveling at 128.7 km/h, a 99th percentile speed. The emergency vehicle has an IVSAWS warning unit and the commercial truck has an IVSAWS vehicle unit. Furthermore, the truck with nearly bald tires must come to a full stop on wet pavement. Under these conditions, the preliminary communication range estimate is 2.7 km. Combining the free-space loss for 2.7 km at various carrier frequencies, a nominal receiver sensitivity of -100 dBm, and approximately 40 dB of foliage attenuation yielded an Equivalent Isotropically Radiated Power (EIRP) estimate of 46 dBm. EIRP is the product of the power into an antenna and the gain of the antenna relative to an isotropic antenna. The 46-dBm EIRP estimate was for a 10-W transmitter with a 6-dBI antenna gain. These preliminary requirements are also listed in table 4.

A single national channel was desired. While statewide channels might be acceptable, any system that operated on multiple channels with variable local restriction on some or all of these channels was unacceptable. Hence, although most drivers spend nearly their entire time in the same county or State, the operational and logistic impact of statewide or countywide IVSAWS frequency allocations were deemed inappropriate for the system design.

Table 4. Preliminary requirement for frequency band search.

Allocation	Nationwide
Bandwidth - combined - IVSAWS only	25 MHz minimum 1 MHz to 5 MHz
Transmitter EIRP	46 dBm
Receiver Antenna Gain	0 dBI
Communication Range	2.7 km

After examining the electromagnetic spectrum for compatibility with IVSAWS bandwidth and transmission power requirements and after eliminating frequency bands occupied by "immovable objects" based on FCC regulations, the consultant identified the frequency band candidates shown in table 5. From strictly an allocation point of view, the most promising frequency bands for IVSAWS are the bands currently reserved for the cellular phone advanced paging systems and the Low Earth Orbit Satellites. These two systems are under development so that compatibility issues for co-channel utilization could be resolved before these systems and IVSAWS complete development and deployment. Other frequency bands might be more favorable for technical reasons, but the cost to reaccommodate other systems in different frequency bands is economically prohibitive in most instances. Due to the extremely large bandwidth of IVHS relative to currently deployed systems, the best IVHS recommendation is that the Federal Highway Administration reserve a portion of the 3.1 -GHz to 3.7-GHz Executive Branch Spectrum that will be transferred to civilian use under proposed legislation.

Based on the contents of table 5, seven carrier frequencies were used as inputs to the extended Longley-Rice propagation model. The seven carrier frequencies are: 47 MHz, 425 MHz, 850 MHz, 915 MHz, 930 MHz, 2440 MHz, and 3400 MHz.

Table 5. Candidate IVSAWS frequency bands.

FREQUENCY	FUNCTION
42 - 47 MHz	Highway Maintenance Channels
420 - 450 MHz	Military Radar
450 - 470 MHz	Public Safety and Land Mobile
825 - 845 MHz	Cellular Phones
870 - 890 MHz	Cellular Phones
901 - 902 MHz	Civilian Fixed-Site Communication
902 - 928 MHz	FCC Part 15 Spread Spectrum
930 - 931 MHz	Advanced Paging Systems
940 - 941 MHz	Land Mobile Reserve (promised)
I340 - 1400 MHz	Radio Location and Radio Navigation
3100 - 3700 MHz	Executive Branch Reallocation

TERRAIN GEOMETRIES

The local landscape can present natural obstacles that interfere with the communication link. This interference is represented in the form of additional absorption losses. Four terrain geometries were selected as part of the process for recommending a frequency allocation for IVSAWS. The geometries had to be typical of the United States and stress the communication link performance. The selected geometries are: (A) a straight high-speed road over flat surface, (B) a curved road with steep elevation through leafy trees, (C) a highway through rolling hills, and (D) a curved road with interleaving mountains. The communication parameter that each of these geometries stressed are given in table 6.

Geometry A is a straight road over a flat surface. Site selection for this geometry is somewhat arbitrary because straight and flat stretches of highway are numerous. Case 6 from the IVSAWS task B report was chosen to model this geometry. The involved stretch of road is U.S. Highway 23 near its intersection with Michigan Highway 14.

Geometry B is a curved road through trees with a steep elevation angle. U.S. Highway 89 Alternate, approximately 20.9 km north of Sedona, Arizona, was selected to emulate this geometry. At the northern end of Oak Creek Canyon, the highway has sharp curves and covers a significant elevation differential — 213.4 m in 3.2 km. Through this region, the posted speed limit drops to 24.1 km/h. Foliage along this route is dominated by dense oak and pine woods.

Geometry C is a highway through rolling hills. U.S. Highway 385, approximately 1.6 km south of Hot Springs, South Dakota, was selected to emulate this geometry. The intervening hills range from 18.3 m to 50.0 m in height.

Geometry D is a curved road with interleaving mountains. Interstate 90, through Snoqualmie Pass, near Seattle, Washington, was selected to emulate this geometry. This area is a well-traveled ski resort area.

Note that geometry A is line of sight (LOS), geometry C is LOS or nearly LOS, and geometries B and D are both non-LOS,

Table 6. Terrain geometry selection.

TERRAIN GEOMETRY	PARAMETER STRESSED BY GEOMETRY
Straight flat high-speed highway	Communication range
Curved highway though leafy trees	Foliage attenuation, antenna pattern
Highway through rolling hills	Diffraction loss due to contour
Curved road with interleaving mountains	Diffraction loss due to contour

DESCRIPTION OF EXTENDED LONGLEY-RICE PROPAGATION MODEL

Having separately determined the relevant communication ranges, carrier frequencies, and terrain geometries, these three factors can be combined to determine an overall link loss for the communication path. Impact of these factors on communication path losses are quantified by various analytical and empirical results. These results have been incorporated into the Longley-

Rice propagation model, which is a computer simulation that provides realistic and representative calculations for communication link losses under all specified conditions.
Under the sponsorship of the Environmental Science Services Administration in the U.S. Department of Commerce, Longley and Rice developed a model for predicting median radio transmission loss over irregular terrain. The Langley-Rice propagation model has been carefully validated with experimental data. The Longley-Rice propagation model has been a standard for the U.S. Army for more than 10 years. Hughes Aircraft Company has extended this propagation model to include the effects of foliage attenuation. The Hughes Aircraft Company Longley Rice Model has also been carefully validated with experimental data and is applicable for radio frequencies above 20 MHz.

The propagation model input parameters are the frequency, antenna heights, terrain conditions, foliage conditions, and communication ranges. The terrain and foliage conditions can either be specified by digitized maps for the area of interest or can be characterized as a two-dimensional surface with specified roughness. From the input parameters, the propagation model calculates the median reference values of attenuation relative to the transmission loss in free space as a function of distance.

The algorithm in the propagation model considers both line-of-sight and over-the-horizon paths. For line-of-sight paths, the calculated attenuation is based on two-ray theory and an extrapolated value of diffraction attenuation. For over-the-horizon paths, the calculated attenuation is the smaller of either diffraction attenuation or forward scatter attenuation. For both path types, the predicted attenuation has been made sufficiently general to provide estimates of transmission loss expected over a widely diverse set of conditions. Attenuation predictions have been tested against data for numerous combinations of frequency, path lengths, antenna heights, and all types of terrain (from very smooth plains to extremely rugged mountains). The propagation model data base includes more than 500 long-term recordings and several thousand mobile recordings in the United States at frequencies from 20 MHz to 1 GHz.

The input parameters for the propagation model are frequencies, communication ranges, antenna heights, terrain conditions, and foliage conditions. The numerical values for the frequencies and communication ranges were derived as specified above. The transmitter and receiver antenna heights were set to 1 m in order to model the effects of a worst-case (with respect to link loss) mobile-transmitter IVSAWS deployment. The numerical values for the terrain and foliage conditions must be derived. Actual digitized terrain and foliage maps were not readily available for the latitudes and longitudes in the geometry A through geometry D areas. Instead, digitized maps of representative terrain containing each geometry's key features formed the propagation model's terrain and foliage input data. Results for the non-LOS scenarios are assumed to upper bound the IVSAWS link-loss estimates because of the severe nature of the communication path geometries.

RESULTS FROM EXTENDED LONGLEY-RICE PROPAGATION MODEL

The path attenuation results from the propagation model for geometry A are presented in figure 13 Similarly, the path attenuation results for geometries B, C, and D are presented in figure 14, figure 15, and figure 16, respectively.

The impact of the path attenuations can be evaluated by considering an example situation. From previous analysis efforts, the communication link is 1 km or less. Furthermore, a receiver sensitivity of -100 dBm at a 10^{-3} bit error rate (BER) is assumed. This is a nominal value for receiver sensitivity at this BER. Finally, consider a transmitter with a 36-dBm EIRP. This

36-dBm EIRP is an estimate of the IVSAWS maximum permissible transmitter power for the worst-case condition that IVSAWS will be required to co-utilize a channel with another system. Under these assumptions, maximum tolerable combined free space and foliage path loss is 140 dB.

In flat terrain (geometry A), at the l-km distance, the path attenuation varies from 85 dB at 47.2 MHz, to 136 dB at 3400 MHz. In rolling hills (geometry C), at the l-km distance, the path attenuation varies from 85 dB at 47.2 MHz, to 125 dB at 3400 MHz. Thus, for the example transmitter power and receiver sensitivity, Scenarios A and C results indicate that reliable communication should be attainable at any of the frequencies considered, provided the link is nearly LOS and the required range is 1 km or less.

In terrain with foliage (geometry B), at the l-km distance, the path attenuation varies from 87 dB at 47.2 MHz, to 199 dB at 3400 MHz. In mountainous terrain (geometry D), at the l-km distance, the path attenuation varies from 94 dB at 47.2 MHz, to 181 dB at 3400 MHz. Thus, for the example transmitter power and receiver sensitivity, geometries B and D results indicate that only the 47-MHz and 425-MHz frequency bands could reliably support a l-km communication link in non-LOS conditions. Geometry D further indicates that none of the frequency bands will provide a link that is totally immune from dropouts in all conditions.

FREQUENCY SELECTION CONCLUSIONS FOR ORIGINAL TASK C REPORT

There are three IVSAWS transmitter deployments - mobile, deployable, and fixed. Frequencies below 500 MHz appear usable in all three deployment cases, whereas frequencies above 500 MHz do not appear usable in all three deployment cases. Frequencies above 500 MHz do not appear usable in the case of mobile transmitter to passenger vehicle communication unless greater than 36-dBm EIRP is permitted. Frequencies above 500 MHz do appear feasible for fixed transmitters provided that the transmitters were positioned such that nearly LOS could be maintained over the area of intended coverage.

Hence, based on link losses alone, a below 500-MHz band is recommended if the same frequency band must provide links for all three IVSAWS transmitter deployments. However, splitting the communication among two bands based on deployment is an option if a “high” band is used for fixed sites and a “low” band is used for other deployments. Due to its many implications for the system’s communication architecture and hardware, a dual-frequency band approach is strongly discouraged.

For two reasons, pursuing a combined IVHS and IVSAWS solution is not viable at this time: First, none of the frequency bands below 1 GHz have the minimum 25 MHz of bandwidth. Above 1 GHz, free-space path losses become problematic. Large and expensive power amplifiers would be required to provide adequate connectivity. Second, frequencies above 1 GHz do not fit the automobile industries’ plans to develop an integrated multiband digital vehicle receiver. Above 1 GHz, the high component and antenna costs are not justifiable because services useful to the driver do not currently exist above this threshold. Therefore, support for bands in the 100-kHz (AM radio) to 900-MHz (cellular phone) range is more probable.

In lieu of a high-end UHF band, the only option for a combined IVHS and IVSAWS solution is to target a currently occupied sub 1 -GHz band for acquisition or co-channel use. The political and legal resistance that will be encountered in doing such should not be underestimated. Strong public, industry, and political support will be needed to clear or co-occupy a channel. However, if IVHS is something the public truly wants, demand will dictate spectrum availability.

Any of the identified bands would be suitable for a proof-of-concept IVSAWS demonstration. However, three reasons favor selecting the FCC Part 15 902-MHz to 928-MHz band for the communications subsystem demonstration in IVSAWS task D. First, commercial off-the-shelf spread-spectrum communication equipment is not available in the other bands. The numerous commercial spread-spectrum transmitter-receivers that exist for the Part 15 band will significantly decrease contract material costs with respect to developing or modifying hardware for use in the identified bands. Second, the 902MHz to 928-MHz band has nearly identical radiofrequency propagation with respect to the 901-MHz to 902-MHz, 930-MHz to 931-MHz, and 940-MHz to 941-MHz bands. Test results obtained using 902-MHz to 928-MHz frequency band radios will be directly applicable to radios operating in the other 900-MHz bands. Third, the 902-MHz to 928-MHz band is at least as stressful as the other bands. Numerous industrial, scientific, and medical (ISM) users; Part 15 devices; and other licensed systems occupy this band. Thus, results from the field will not be favorably skewed.

The 420-MHz to 450-MHz frequency band and the 450-MHz to 470-MHz frequency band are the most favorable from a nationwide allocation point of view. The 42-MHz to 47-MHz highway maintenance band also seems feasible. These three bands are the three, non-prioritized recommendations for the frequency band of a final, rather than demonstration, IVSAWS.

The contents of the 410-MHz to 470-MHz frequency bands are shown in figure 17. The 420-MHz to 450-MHz band contains four military radars, the Coastal Ranging System, and a 444-MHz amateur radio repeater. Of the radar and ranging systems, only the PAVE PAWS radar affects the inland continental United States. The four sites of AN/FPS- 115 PAVE PAWS radars are shown in figure 18. Thus, a 5-MHZ allocation in the lower portion of the band away from the amateur radio repeater seems promising.

Test results from a Part 15 frequency band will be somewhat skewed relative to the 420-MHz to 450-MHz frequency band. More representative results could be obtained by using a derivative of the PLRS transmitter receiver to perform the IVSAWS communication demonstration. A further benefit is that ranging algorithms are already part of PLRS. Such an approach would require a modification to the existing contract.

ADDENDUM TO FREQUENCY SELECTION CONCLUSIONS

As discussed subsequently, in order to provide a timely alert to a driver, the IVSAWS system must determine the relative range between the warning unit and the vehicle. An effective and inexpensive method for achieving this is through the use of spread-spectrum radios. However, subsequent investigation by the Federal Highway Administration with the help of the Mitre Corporation revealed that a wideband frequency allocation necessary for a spread-spectrum solution was not viable at this time. Furthermore, several narrowband frequency channels were reallocated from Government use to civilian use. The IVSAWS design was reexamined to determine the viability of fulfilling the functional requirements given a narrowband channel. As an early IVHS program, IVSAWS efforts pointed out the critical need for the Federal Highway Administration to pursue the IVHS frequency allocation issue from an institutional viewpoint. The IVHS community also later began to realize that frequency channel allocations for the communication subsystem portions of IVHS developments would be a critical issue. The 1992

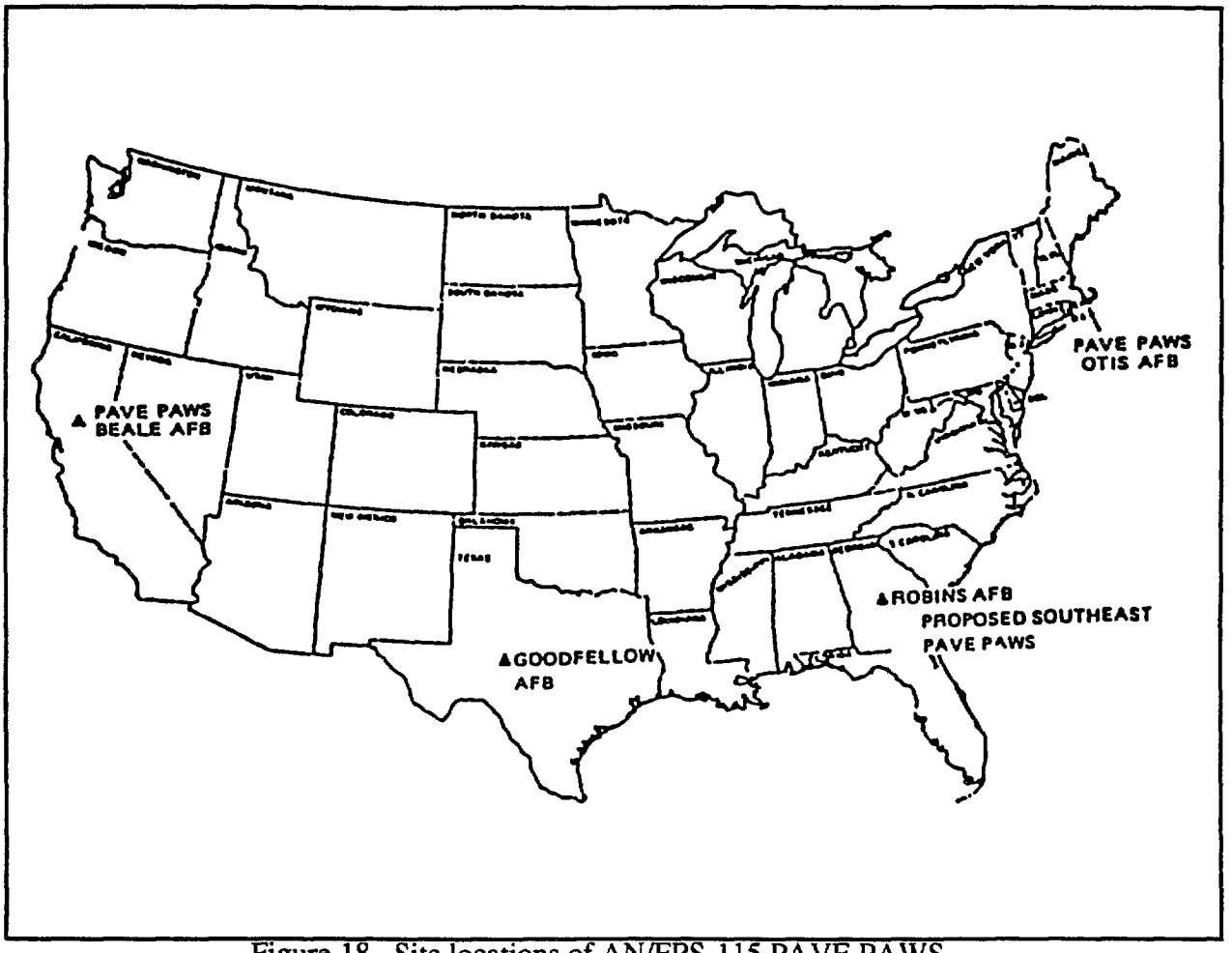

Figure 18. Site locations of AN/FPS-115 PAVE PAWS.

IEEE Vehicular Technology Conference keynote address also asserted that the spectral logjam could halt IVHS development in its tracks.

SUBSEQUENT INVESTIGATIONS

The purpose of IVSAWS is to provide pro-active, supplemental warnings to drivers in their vehicles of any imminent, potentially hazardous situations. The situations of greatest concern are those that have remained hazardous (e.g., railroad grade crossings) despite traditional crash-reduction techniques, such as additional mechanical signing. Rather, radio transmitters will communicate electronic warnings to motorists. While a frequency allocation is transparent to normal system operation, obtaining a suitable frequency allocation is critical to the overall success and deployment of IVSAWS.

In the United States, the radio spectrum is managed by both the Federal Communications Commission (FCC) and the National Telecommunications and Information Administration (NTIA), part of the Commerce Department. Individuals, businesses, State and local governments, and other private entities are licensed by the FCC. Government (which in the U.S. spectrum management means the Federal Government) entities obtain their spectrum from NTIA. In doing

so, NTIA consults with the Interdepartmental Radio Advisory Committee (IRAC). Particular spectrum bands can be Government (administered by NTIA for Federal Government users), Non-Government (administered by FCC for everyone besides the Federal Government), or administered jointly between the FCC and NTIA.

The search for frequency bands appropriate to the IVSAWS role was performed by a consultant in Washington, D.C., in conjunction with several representatives of the Mitre Corporation. As a national system, a nationwide allocation is the most desirable approach. A statewide allocation might also be acceptable, but multiple channels with variable local restrictions on these channels are not acceptable. Frequency bands were eliminated if they were not compatible with IVSAWS requirements or if they were occupied by "immovable objects" based on FCC regulations.

Only two bands are currently unused and several others may become unused. The two unused bands are at 220 MHz and 3 GHz, These bands are being transferred from their previous designations. A frequency allocation below 500 MHz is preferred because attenuation due to foliage absorption in suburban and rural areas is less and, hence, lower-power equipment is required. The power-savings benefit is particularly important for transmitters at battery-powered remote sites or for transmitters on mobile vehicles.

Based on the system engineering studies, two communication architectures have emerged as the primary candidates for the communication backbone of IVSAWS. Based on the marketing surveys of the general public and deployment professionals, the IVSAWS architecture features centralized alert broadcasts from a regional operations center. The Federal Highway Administration will make the final selection between the two candidate communication architectures. The availability of a suitable frequency band will be a significant decision metric for tradeoff analyses. The first architecture uses a Hughes-designed message and waveform format in the nationwide, narrowband 220-MHz to 222-MHz frequency band. The second architecture uses an IVHS standard message and waveform format in regional, commercial FM radio subcarrier-authorized frequency bands. The latest status of the narrowband channels, potentially available nationwide, are summarized below.

220-MHz to 222-MHz CHANNEL

The 220-MHz to 222-MHz band was originally a Government radar band. In addition, radio amateurs (licensed by the FCC) were allowed to use this band on a secondary basis. As part of the agreement that transferred this 2-MHZ band from NTIA to the FCC, certain channel pairs would be reserved for the Federal Government. In particular, 10 pairs of 5-kHz channels (i.e., a total of 100 kHz) were reserved for nationwide Government users. These channel pairs are numbered 111 through 120 (see 47 C.F.R. $90.175). Furthermore, Government entities were also allowed to apply for local area 5-kHz channel pairs, but (as a practical matter) this option may no longer exist in the major markets. When no other Government agency indicated interest in using these channel pairs, the Federal Highway Administration requested that they be allowed to use one block of five channel pairs for IVHS experiments.

NTIA has granted FHWA's request for permission to use these five channel pairs for IVHS experiments. Under the terms of the transfer, all channels must remain under the direct control of FHWA. There must be a written contract that acknowledges FHWA control over these channels and that allows FHWA to order the shutdown of any experiment should that become necessary. These requirements do not pose a problem for the currently planned IVSAWS experiments since only receivers (not transmitters) will be installed in the general public's vehicles.

Control of these channels is lodged with Electronic Systems Branch, ATIS/AVCS, in the IVHS Section of the Research Division (HSR-12) located at the Turner-Fairbank Highway Research Center in suburban Virginia. Procedurally, a letter request is sent to obtain the formal application form which is then submitted.

Regional use of one 5-kHz channel pair for limited user trials of the IVSAWS program should be easily achieved. None of the formal requirements presents a problem and informal discussions with the relevant personnel have shown their agreement that IVSAWS testing is an appropriate use of one of these channel pairs. The initial use of a channel pair is also consistent with the stated long- term plans.

While formally NTIA has only "loaned" these channels to FHWA for 15 years, the clear expectation is that in about 5 years the channels will be formally transferred from NTIA to the FCC for permanent licensing, but only for IVHS applications. Thus, assuming that the initial IVSAWS trials are successful, by roughly the time these trials are finished, the channel pair used for these regional trials could be permanently designated for nationwide IVSAWS use.

HIGH VHF CHANNEL

The high VHF 173-MHz band was originally a commercial and government research band for radio navigation. An FCC "Re-Farming" Proposal, Docket 92-235, may make these channels available to others. Currently, this frequency band is divided into 15-kHz channels. Actual bandwidth of transmissions was potentially greater than 15 kHz, so only alternate channels were assigned. The intermediate proposal for 1 January 1996 is that bandwidth be restricted to 12 kHz and that 3 kHz in each channel be used for guard spacing so that adjacent channels can always be assigned and used. The ultimate proposal is that all of these frequency channels at 173 MHz be combined and then repartitioned into 6.25-kHz channels, of which 5 kHz in each channel would be usable, hence permitting adjacent channel assignments without causing related interference.

Obtaining a sufficient number of these channels on a nationwide allocation is a fully viable alternative to the 220-MHz allocation. For IVSAWS purposes, the propagation characteristics of 173 MHz and 220 MHz are essentially equivalent since both are in the VHF band. The waveform designed for the 220-MHz band uses 5 kHz of bandwidth. Since the 173-MHz band is expected to have 6.25-kHz bandwidth channels, the proposed solution at 220 MHz is readily transferable to the 173-MHz channels and does not require any changes in the waveform design.

CHAPTER 5. DRIVER ALERT DISTANCE RANGE DETERMINATION

OVERVIEW

The driver alert distance (DAD) is the distance from a hazard that a driver must be warned so that the driver can perceive the situation and respond accordingly. The Safety Hazard Advance Warning System (SHAWS) report showed that the DAD exceeds the distance at which the hazard first enters the driver's field of vision.[28] As shown in figure 19, the DAD is composed of a warning generation time, a warning effectiveness period (WEP), and a decision sight distance (DSD). The DSD is defined as the distance traveled during the period of time required for a driver to detect and recognize a hazard (from the time the hazard first enters the driver's field of vision), decide upon a hazard avoidance response, initiate the response, and perform the maneuver. The time required and, hence, distance covered depends on the type of maneuver and the type of vehicle. The three types of maneuvers are designated: increased attention, lane change, and full stop. The SHAWS report also tabulated preliminary results for the time required to perform a corrective lane change. The two types of vehicles considered are passenger vehicles and commercial trucks. Combining the various factors yields an overall distance which is then the IVSAWS communication range.

ASSUMPTIONS

Prior to the task B results, the communication range for a worst-case hazard scenario was developed, The worst-case scenario involves a high-speed emergency vehicle approaching a high-speed commercial truck. Each vehicle was estimated to be traveling at 128.7 km/h. The emergency vehicle was assumed to have an IVSAWS warning unit and the commercial truck was assumed to have an IVSAWS vehicle unit. Furthermore, the truck was assumed to come to a full stop on wet pavement with nearly bald tires. Under these conditions, the required communication range was 2.7 km. Upon completion of the task B report, the utility of this worst-case scenario to be used as a valid design point was reevaluated.

As a result of this reevaluation, it was determined that converging high-speed vehicles do not represent an appropriate design point due to their statistical insignificance. The hazardous situation analysis in task B determined that less than 0.2 percent of all traffic accidents involve an emergency vehicle approaching another vehicle head-on. A system that provides coverage when both vehicles are traveling at the 99th percentile speed requires twice the communication range as a system that provides coverage for all other roadway hazards. A significant increase in cost for an overdesigned system would render IVSAWS unaffordable.

The hazardous situation selected as the design point involves a receiver-equipped commercial truck or car approaching a stationary transmitter. Margin was added to the calculated DSD in order to compensate for scenarios involving mobile transmitters approaching at modest speeds, DSD was evaluated for vehicle speeds of 64.6, 80.5, 96.6, 112.7, and 128.7 km/h. A 128.7-km/h (the 98th percentile speed for interstate and rural arterial highways based upon measurements made by Olsen, et al.) DSD was evaluated for three hazard avoidance maneuvers, e.g., complete stop prior to reaching hazard, lane change, and increased driver attention.[29]

DSD EVALUATION

The DSD time can be subdivided into two intervals: (1) the perception-response time and (2) the hazard avoidance maneuver time. These two parameters are evaluated for the hazard avoidance maneuvers under consideration. Perception response times are determined through experimentation. Subjects perform hazard avoidance maneuvers in response to simulated roadway hazards and the elapsed time is measured. Current literature from these experiments specify the perception-response time to be 1.6 s.[21,30] However, much literature exists on the topic of perception-response times and estimates of a design value range from 0.9 s to 4 s, depending on road geometry and author opinion. The American Association of State Highway and Transportation Officials (AASHTO) recommends a design value of 2.5 s.[29] Because the purpose of the IVSAWS study is not an exhaustive study of driver perception and reaction, the 2.5-s value has been selected as a baseline for the evaluation of DSD and DAD.

Table 7. Hazard avoidance maneuver distances.

	Maneuver Distance (m)			
Vehicle Speed (km/h)	Increased Attention	Lane Change[28]	Full Stop[31] Car	Full Stop[31] Hvy truck
64.4	0	79.3	67.1	115.9
80.5	0	91.5	115.9	198.3
96.6	0	103.7	189.1	301.9
112.7	0	115.9	286.7	430.0
128.8	0	128.1	417.8	567.5

Table 8. Decision sight distances.

		Decision Sight Distance (m)			
Vehicle Speed (km/h)	Perception-Response Distance (m)	Increased Attention	Lane Change	Full Stop Car	Full Stop Hvy truck
64.4	45.7	45.7	125.0	112.8	161.6
80.5	54.9	54.9	146.4	170.8	251.6
96.6	67.1	67.1	170.8	256.2	369.0
112.7	79.3	79.3	195.2	366.0	509.3
128.8	88.4	88.4	216.5	475.8	664.9

Hazard avoidance distances for the three maneuvers outlined above are listed in table 7 for vehicle speeds of 64.4, 80.5, 96.6, 112.7, and 128.7 km/h. Increased driver attention requires no vehicle maneuver and is assumed to be instantaneous upon driver perception of the hazard. The braking maneuver is assumed to be a controlled stop on worn tires (l.59-mm tread) over a wet paved surface without wheel lockup.

The DSD estimates are obtained by adding the 2.5-s perception-response time to the hazard avoidance maneuver distances in table 7. The additional elapsed time for the perception-response

translates into additional distance as a function of vehicle speed. The resulting DSD calculations are shown in table 8.

WARNING EFFECTIVENESS PERIOD (WEP)

In order for an IVSAWS warning to be effective, the driver should understand the warning and be attentive to the impending hazard prior to the DSD. However, the driver should not be alerted so early that he or she disregards or forgets the warning before the hazard presents itself. Thus, the WEP is the period of time during which a driver can initiate a warning response (e.g., increased attention, removal of foot from accelerator) that will increase the probability of a successful hazard avoidance maneuver.

The time of the WEP can be estimated by considering traffic light operation. If it is assumed that the WEP for invehicIe and roadway electronic warnings are similar, then the duration of the amber phase of traffic signals might be usable as a baseline for IVSAWS warning effectiveness. Olsen and Rothery show that an amber period of 6 s is appropriate to warn drivers of an impending red light for vehicles traveling less than 80.5 km/h.[32] Extending their analysis to vehicle speeds of 128.7 km/h yields amber duration of slightly over 6 s.

The analogy between amber-phase duration and IVSAWS WEP may not be entirely appropriate for two conflicting reasons. The amber period includes time for a full stop prior to the intersection, which is the most stringent of the hazard avoidance maneuvers. Because hazard avoidance is not part of the IVSAWS WEP, the amber period seems to overestimate the duration of the WEP. On the other hand, extending the amber phase beyond 6 s may not result in an ineffective warning, although it is a popular hypothesis that drivers treat an extension of the amber beyond what is normally needed as an extension of the green. Thus, the IVSAWS WEP may be shorter or longer in duration than the 6-s amber-phase duration.

Nevertheless, a 6-s IVSAWS WEP seems like a reasonable initial estimate to be verified or corrected during the subject testing phase of the study when considering the sparse nature of literature about warning effectiveness periods for electronically generated invehicle warnings. Given this estimate, the IVSAWS warning units must repeat their broadcasts at least once every 6 s to ensure that drivers respond to IVSAWS warnings in a timely manner.

DRIVER ALERT DISTANCE (DAD)

The driver alert distance is composed of: (1) the DSD, (2) the distance traveled during the WEP, and (3) the distance traveled by the vehicle from the point of message reception by the invehicle IVSAWS receiver up to driver comprehension of the warning. The latter two DAD intervals may or may not be mutually exclusive, depending upon the point of message reception relative to the location of the roadway hazard.

In the worst case, the start of the WEP and the driver notification are simultaneous. Thus, the hazard warning will be received, processed, and presented to the driver such that a warning response is initiated at the very beginning of the WEP. This requires that distance be built into the DAD to cover message processing by the invehicle receiver, warning generation, and driver detection and recognition of the warning (steps to though t4, figure 19). Message processing will be nearly instantaneous. Message generation could take several seconds if speech synthesis is used. A two-sentence English message could consume 5 s. Driver detection and perception of the hazard message is assumed (again, due to lack of relevant literature) to be equal to the 2.5-s

hazard perception-response time described above. Table 9 lists resulting DAD as a function of vehicle speed when each of these factors is accounted for.

The corresponding required IVSAWS communication range is 1150 meters when vehicle and hazard are separated by a straight, flat road. As road curvature increases, the required communication range will decrease due to geometry.

Table 9. Driver alert distances.

				Driver Alert Distance (m)			
Vehicle speed (km/h)	WEP distance (m)	Message-generation distance (m)	Warning perception response distance (m)	Increased Attention	Lane Change	Full Stop Car	Full Stop Hvy truck
64.4	106.7	88.4	45.7	286.7	366.0	353.8	402.6
80.5	134.2	112.8	54.9	356.8	448.3	472.7	553.5
96.6	161.6	134.2	67.1	430.0	533.7	619.1	732.0
112.7	189.1	158.6	79.2	506.3	622.2	793.0	936.3
128.8	216.5	179.9	88.4	573.4	701.5	960.7	1150.0

LINK MARGINS IN TERRAIN GEOMETRIES

Four terrain geometries were selected as part of the process for recommending a frequency allocation for IVSAWS. The geometries had to be typical of the United States and stressful in excess path loss. The selected geometries were: (A) a straight, high-speed highway over flat surface, (B) a curved road with steep elevation through leafy trees, (C) a highway through rolling hills, and (D) a curved road with interleaving mountains. Other than total blockage by a mountain, the greatest excess path loss in the communication link is foliage attenuation. The IVSAWS communication system is design to complete the link under the worst-case conditions of foliage loss, maximum range, 98th percentile speed, wet road, heavy vehicle, etc. Link margin exists whenever terrain geometry or hazard scenario are not worst case. Figure 20 presents the link margins for the straight road over flat surface (geometry A) for various vehicle speeds and hazard avoidance maneuvers. The design has 30-dB link margin under worst-case hazard conditions for the straight road terrain geometry. Figure 2 1, figure 22, and figure 23 present the link margins for geometry B, geometry C, and geometry D, respectively. Positive link margins are maintained in all cases, except when dropouts occur due to mountain peaks intersecting the line of sight between the roadway transmitter and vehicle (scenario D) and when the required DAD needs the signal to propagate through more than 609.6 m of trees. With the specified design, transmitter-vehicle communication paths within the DAD with negative link margins will occur less than 1 percent of the time.

CHAPTER 6. GENERAL PUBLIC AND DEPLOYMENT COMMUNITY SURVEYS

INITIAL OPERATIONAL CONCEPT

The IVSAWS program is a 3-year Federal Highway Administration (FHWA) project to define a vehicular safety information system that provides hazard alert, safety advisories, and, potentially, distress call capabilities. As a nationwide system, IVSAWS must address roadway hazards on rural, secondary, primary, and urban highways. The project's focus is on scenarios in which driver response time is insufficient due to the dynamics of the situation, terrain features, or known infrastructure problems. Situations requiring increased driver awareness may be temporary, fixed, or mobile in nature.

Postulated temporary scenarios involve road maintenance, roadway construction, or accident scenes. Fixed scenarios contain elements that lead to repeated or fatal accidents. Examples are unmarked railroad crossings, one-lane bridges, or traffic corridors that repeatedly or seasonally experience low-visibility weather conditions,

Postulated mobile scenarios involve emergency, slow-moving, and wide-load vehicles. Emergency vehicles such as fire, police, ambulance, and rescue have right of way through traffic. However, congestion and improved automobile soundproofing have made it increasingly difficult for emergency vehicles to traverse traffic safely. Motorists approaching slow-moving school buses or farm equipment on sharp turns have reduced response times. Wide loads require increased driver alertness to pass safely.

State and Federal reports on accident histories indicate that additional mechanical signing often does not further reduce accidents, particularly in situations dominated by immediacy. Mechanical signing is not readily applicable to dynamic situations and drivers can fail to notice signs due to temporary distractions. Instead, radio transmitters placed near roadway hazards or in emergency vehicles will communicate advance warnings to approaching vehicles equipped with radio receivers. By receiving a priori notice before the driver actually sees the hazard, the driver can use this additional distance and time to initiate safe actions such as decreasing vehicle speed, that will increase the probability of successfully avoiding the impending dangerous situation.

NEED FOR IVSAWS

The National Highway Traffic Safety Administration (NHTSA) reports that accidents cause 41,000 deaths, 3.5 million injuries, and $100 billion in losses annually.1351 Accident statistics show that seat belts save 42 percent of lives that would have otherwise ended in fatalities due to accident severity. Similarly, accident statistics show that the combination of seat belts and airbags save 46 percent of lives that would have otherwise ended in fatalities due to accident severity. Thus, accident avoidance has the potential to prevent over 50 percent of all fatalities.

Federal Highway Administration (FHWA) reported that motorists drove 3.5 billion kilometers in 1990.[36] The two major impediments to safe driving are accidents and congestion. Both of these characteristics exist in urban and rural settings, albeit in slightly different forms. These urban and rural differences ultimately determine the preferred approach for the amount of intelligence that goes into the vehicle versus the infrastructure.

INITIAL DESIGN GUIDELINES

At program inception, the Federal Highway Administration provided guidelines for IVSAWS functionality given that this functionality would be refined during the course of the program based on the conclusions from several studies that were integral to the program. FHWA stressed that motorists perception of the overall functionality will determine IVSAWS acceptance or rejection. Consequently, human factors issues are paramount. The system must be simple to operate and require minimal training. Alerting messages must facilitate rapid comprehension. Furthermore, drivers must be alerted at the proper time. Irrelevant alerts or excessively premature warnings will lead to driver irritation and loss of confidence in the system. Operational and logistic impact on emergency personnel must be minimal. Warning units in all deployments, especially remote permanent sites, should be compatible with battery power. The target price for the invehicle unit is equivalent to a low-end car stereo system so that drivers will consider this an affordable safety option. The baseline design could assume that near-term automobiles had a display as part of some other driver information or navigation system. As a safety applique, legal liability is an ongoing concern. Finally, the communication link should provide evolutionary growth for new alerting messages as other scenarios were identified from subsequent State and Federal accident data.

FUNCTIONAL DEFINITION STUDIES

The functional requirements for the first-generation IVSAWS are the product of six studies that were conducted during the program. The six studies are: (1) situation identification and prioritization, (2) driver alert warning system design, (3) communication subsystem architecture tradeoffs, (4) concept workshop, (5) market assessment, and (6) deployment community interviews. The first three are engineering studies, whereas the last three are user market research. These engineering studies identified several scenarios that were potential hazards, but required significantly more functional capabilities than in other scenarios to ameliorate the hazard scenario. For example, should the buildup of traffic queues be detectable? Also, should warnings discriminate between highways and parallel roads? To solicit a broad-based evaluation of the preliminary IVSAWS concept, customer-desired functionality was researched.

SUMMARY OF ENGINEERING STUDIES

The situation identification and prioritization study was performed by the University of Michigan Transportation Research Institute during March 199 1. This task identified candidate advisory, safety, and hazard situations using recent accident data and input from transportation engineering specialists. These results are summarized in table 10.[37]

The driver alert warning system (DAWS) represents the vehicular subsystem used to convey information concerning advisory, safety, and hazard situations to the driver of the vehicle. The DAWS study, completed in November 1991, used anthropometric analysis and mockups to evaluate the IVSAWS human-machine interface with respect to ease of message perception and correct driver response to these messages. Subjects were exposed to hazard pictograms and were then asked to verbalize their understanding and preferences regarding the signaling characteristics. The signaling options considered were: (1) monochrome, (2) color, (3) blink, (4) tone, (5) text message, and (6) voice message. As shown in figure 24, the signaling presentation preferred by the group was the combination of color, audio tone, text, and a short voice message. Previous studies have shown that most subjects could not identify the majority of the automotive

Table 10. Ranking of scenarios.

Application	Value
Moving emergency vehicle	8
Train at/approaching crossing	7
Environment-related hazard	7
Accident site (motorist mayday)	7
Roadway construction zone	6
Infrastructure hazard	5
Accident site (remote activation)	5
School bus or special vehicle	4
Detour advisory	4
Disabled vehicle at roadside	3
Traffic backup (queue detection)	2

icons or pictograms in the SAE standard J1048.[14] Similarly, invehicle navigation system tests in England have shown that drivers rely primarily on audio cues and only use visual cues for occasional confirmation purposes.[38] Thus a multimodal format was perceived as the most effective presentation method for a safety warning system. All subjects further agreed that IVSAWS would be a substantial aid to the driver.[39]

The communication subsystem architecture study was performed during October and November 1991. The operational concept baseline established at that time was that the warning units would be located at and transmit at each hazard site. The system architecture for this operational concept can be summarized as independently operated transmission nodes performing local area broadcasts. This study identified and evaluated communication subsystems that supported this overall architecture. This study determined that the proper warning interval for each motorist depended critically on the vehicle speed and the intended driver response, These requirements translate into distances from the hazard at which the driver should be notified for maximum effectiveness as shown in the previously referenced table 9.[37] Thus, some sort of geolocation feature is necessary to determine relative ranges. Relative ranges also help to determine if a motorist is converging on or exiting from the hazard site, thereby providing some degree of directional control.

Candidate communication architectures were evaluated using the following criteria: (1) functionality of one-way versus two-way communications, (2) relative merits between spread-spectrum (SS) and narrowband (NB) frequency channels, (3) relative merits between Global Positioning System (GPS) and two-way ranging process called round-trip timing (RTT), (4) frequency allocation, and (5) cost. Two critical factors to emerge from this study were the vehicle equipment costs and frequency allocation issues. In particular, wideband frequency channels suitable for mid-range mobile communications (below 500 MHz) are not available and licensing motor vehicles as active transmitters is as yet an unsolved regulatory issue.[40] The results are summarized in table 11.[41] Spread-spectrum benefits are its low cost due to mature technology and its superior performance in the presence of co-channel interference.[42,43] GPS benefits are its nationwide coverage, low infrastructure costs, and accuracy. Since

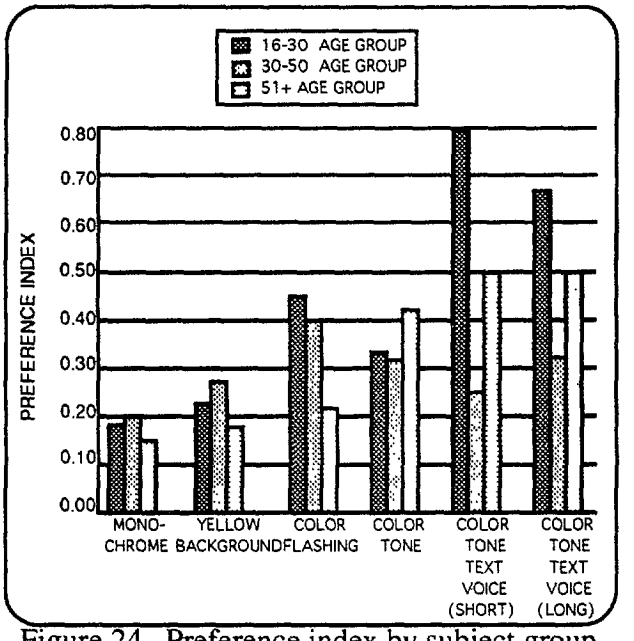

Figure 24. Preference index by subject group.

Table 11. Architecture tradeoff summary.

Figure of Merit	Two-Way NB GPS	One-Way NB GPS	Two-Way SS RTT	One-Way SS GPS
Adapt Coverage Area Performance	Excellent	N/A	Fair	N/A
Multi-transmitter Performance	Fair	Fair	Good	Excellent
Frequency Band Allocation	Good	Good	Fair	Fair
Cost (Excluding Driver Info Sys)	$550-$750	$550-$750	$150-$200	$600-$800
General Comm Sys Performance	Good	Good	Excellent	Excellent

this initial work was completed, GPS receiver cost has nearly halved and, in light of the regulatory issues, represents an attractive approach for an embedded vehicle system (versus retrofit) using narrowband communications.

CONCEPT WORKSHOP

As a nationwide system, IVSAWS must address both urban and rural safety issues in a creditable and reliable manner. To solicit a rural perspective of the preliminary IVSAWS concept, a workshop was planned in which representatives of all aspects of the transportation community could participate. This workshop was held during September in Redding, California, at the 1992 Conference on Improving Rural Transportation Through Advanced Transportation Technologies.

A total of 36 representatives attended the workshop. The State breakdown was as follows: four representatives from the District of Columbia, one from Florida, four from Michigan, seven from California, one from South Dakota, one from Maryland, two from Montana, three from Virginia, two from Colorado, four from Oregon, two from Wyoming, two from Nevada, and two from Arizona. The agency breakdown was as follows: 11 IVHS contractors, 11 FHWA members, 7 university transportation departments, 5 State transportation officials, 1 automobile club, and 1 county works official. Although representatives from deployment communities (police, fire, etc.) were under-represented, the audience was comprised of individuals who were knowledgeable about highway transportation and whose input provided a qualitative complement to information gathered thus far from the other activities.

Workshop participants stressed six factors as truly representative of the rural transportation environment in regards to IVHS deployment issues: (1) population distribution, (2) accident scenarios, (3) rights of way, (4) funding, (5) quality of materials and equipment, and (6) technical expertise availability.

Ever since the first census in 1790, the data in figure 25 shows that the United States continues its urbanization. But, the increase in urbanization is not to say that this process has been uniform. California is the least rural, with only 7 percent of its population living apart from urban centers. On the other hand, Vermont is the most rural, with 68 percent of its population living apart from urban centers.

The increase in urbanization has not resulted in continual increases in population densities. Demographics indicate the emergence of a “fifth migration” to the suburbs. The urban population density has dropped from 1,068 people per km2 in 1970 to 827 people per km2 in 1990. People are increasingly living in rural settings attached to urban centers and commuting greater distances to employment and services (such as department stores) in the corresponding urban center.

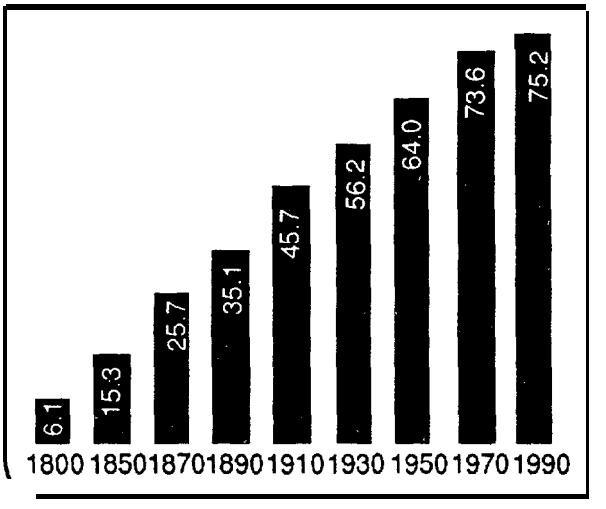

Figure 25. Percentage of Americans living in urban areas.[13]

Furthermore, the increase in urbanization does not mean that all urban centers are large. Quite the contrary. According to table 12, of the 19,289 metropolitan areas in the United States, only

194 have populations over 100,000. For example, the largest city in Wyoming has 76,000 people.

The transportation environment for these urban centers is predominantly rural, both in the nature of the roadways and the tremendous distances between these urban centers. Of the 6.3 million km of roadways in the United States, 5.1 million km are categorized as rural. These characteristics greatly impact the safety issues associated with driving in rural environments. When accidents occur in rural settings, remoteness, weather effects, or infrastructure faults are often the major contributing factors.

Accidents often involve only one vehicle or many vehicles, but seldom just two vehicles. An accident is often many miles from the nearest phone, leaving people stranded. There is a strong desire to summon emergency services to an accident scene promptly. In the Western States,

Table 12. Urban areas by population.[44]

Population	Number of Cities	Population (mil)	Percent of Total
Total	19,289	152.9	100.0
1,000,000 or more	8	20.0	13.0
500,000 to 999,999	15	10.1	6.6
250,000 to 499,999	40	14.2	9.3
100,000 to 249,999	131	19.1	12.5
50,000 to 99,999	309	21.2	13.9
25,000 to 49,999	567	20.2	13.0
10,000 to 24,999	1,290	20.3	13.3
Under 10,000	16,929	28.2	18.4

accident victims often become fatalities due to exposure during the winter because they are stranded or cannot summon help, rather than dying from injuries sustained in the accident. Response times to summon emergency services are typically measured in hours rather than minutes. Transport times for serious injuries can also be significant because many rural counties do not have hospitals. For example, Montana has over 15 539 km2 in its territory and only 13 of the 56 counties have doctors or ambulances. Thus, the ability to summon services promptly via a mayday feature would substantially mitigate these circumstances.

Another predominant rural accident scenario is multiple-car pileups due to weather-related poor visibility. Accidents involving ice and snow are common, but seasonal, in the Northern and Western Mountain States, such as Wyoming, Utah, Colorado, and Montana. Accidents involving fog are common, but seasonal, in the Eastern States, such as Tennessee, Virginia, and Massachusetts. Accidents involving dust are common, but seasonal, in the desert areas of Arizona, California, and Nevada. A hazard alert network could pre-empt some of these accidents by properly warning motorists to avoid driving during these conditions. Queues build up in rural areas because alternate routes do not exist. In bad weather, anything which keeps people at rest areas or in towns until an accident or the weather has cleared prevents additional motorists from being stranded, becoming ill from exposure, or being injured in a related accident.

Another seasonal rural accident scenario is wildlife crossing roadways. Migration paths of deer, buffalo, and elk are common in the Western States, such as Wyoming, Utah, and Montana, as well as the Southeastern States, such as North Carolina. The standard solution is to attempt to control migration by funneling the animals through special chutes under the roadways. This requires miles of fences to control the migration. Animals often break through or get caught in the fences anyway, so this is an expensive solution. When animals are on the roads, especially at night, due to their size and mass, the resulting accident is fatal for both the animal and vehicle driver. Workshop participants noted that such roadside mechanical signs are seldom noticed or heeded, so some accidents could be preempted by proactively advising motorists during these seasonal conditions.

Accidents at railroad grade crossings are relatively infrequent, yet are almost always fatal. Only one-fourth of all railroad crossings are fully instrumented with lights and gates. Most gates are not instrumented due to the high infrastructure costs relative to the probability of an accident. Most of the instrumented gates are in urban and suburban settings, rather than rural settings. The typical warning design parameter is 20 s at the maximum speed for that section of the track. Sensors to trigger the crossing gate are placed at the corresponding distance on either side of the road crossing. Obviously, if the train is not moving at maximum speed, then the warning is correspondingly longer. Also, if a train has crossed a sensor, but is now stationary, the crossing gate and lights are still activated. When crossings are instrumented, drivers often ignore activated gates when the train is slow moving or stationary. When crossings are not instrumented, motorists must judge if they have sufficient time to safely cross the grade prior to the train's arrival. These conditions often result in accidents. One-third of the accidents are the automobile (or truck) hitting the locomotive, one-third are the locomotive hitting the automobile, and one-third are the automobile hitting the freight cars, often near the center of the train. Based on these experiences, an IVSAWS transmitter at each crossing would be prohibitively expensive and have the same motion-versus-presence problems as a fully instrumented gate with a conventional design. A more desirable alternative according to the workshop participants is to place the transmitter on the locomotive and the applicable range would increase as the speed of the train increases. The primary motivation for the railroad companies to adopt such a system will be to obtain long-term decreases in maintenance and liability costs.

Rural roads also have right-of-way problems that do not generally exist for urban roads. When the rural roadway system was implemented in the United States, the guiding principle was "do not take too much land from any one farmer." Hence, rural roads are mostly two lanes wide with small shoulders. Rights of way were determined by property boundaries rather than road design principles, often leading to poor road geometries. Examples are sharp S-turns approaching bridges or T-intersections at the crests of hills.

In general, rural agencies are more sensitive to system costs than their urban counterparts. Due to matching funds from the Federal Government, State departments of transportation have, on average, $11,180/linear kilometer of roadway in their budgets. However, local departments of transportation often have, on average, only $1,118/linear kilometer of roadway in their budgets. Several attendees at the rural IVSAWS workshop recounted situations in which attempts to perform bridge replacements and fix poor geometric designs were abandoned because the local counties could not provide the 20 percent of funds needed to match the 80-percent Federal contribution to the project. Public agencies with smaller population bases have less budget to spend on nonessential systems. Increasingly, retirees are migrating to rural areas, while young adults are moving away to find work. The retirees are usually self-reliant and living on fixed incomes so they generally vote against tax increases, thereby further compounding the problems of minimal budgets for local agencies.

The minimal budgets at the county level directly impact the level of personnel expertise and the quality of materials and equipment. County transportation officials are often serving in a

part-time capacity. These officials may not have formal technical training and are often serving in a strictly administrative capacity. Advances in paving materials for more durable roadways and other developments have not filtered down to this level. Recognizing such conditions, the Federal Highway Administration recently started the Pavement Management Program and has created a special Rural Applications section within IVHS. The IVSAWS development must maximize use of existing equipment and minimize expenditures on unique equipment. Any required infrastructure expenditures should be distributed over a wide geographic area in order to minimize costs. In this context, the transportation officials thought that a regional IVSAWS broadcast center rather, than independently operated nodes, might better suit the rural transportation environment.

In general, the rural transportation officials welcomed the development of IVHS products and technologies that would serve the small urban and rural environments. The appropriate IVHS applications should focus on improving safety and mobility by providing better traveler information services rather than focusing on congestion, which is largely an urban problem. The suggested services include traffic conditions, weather, roadway conditions, tourist routing, emergency services, invehicle signing, and roadside hazard warning systems. These discussions led to the ranking of hazard scenarios for IVSAWS given in table 13. Overall, the workshop participants agreed that IVSAWS would improve the rural transportation environment. The most critical scenario would require cooperation between the Federal Highway Administration and the Railroad Transportation Authority to solve properly. Also, the total mileage of roadways managed under rural agencies strongly favors centralized per capita approaches (e.g., wide-area broadcast) rather than distributed per mile approaches for system architectures. Otherwise, State and Federal funding may be required to build and maintain an IVSAWS infrastructure. Thus, the challenges facing IVSAWS development, in particular, and IVHS development, in general, are institutional as well as technical.

Table 13. Workshop ranking of scenarios.

Application	Value
Train at/approaching crossing	6
Accident site (motorist mayday)	5
Accident site (remote activation)	5
Environment-related hazard	4
Roadway construction zone	4
School bus or special vehicle	3
Moving emergency vehicle	2
Infrastructure hazard	2
Detour advisory	2
Disabled vehicle at roadside	2
Traffic backup (queue detection)	2

FOCUS GROUP INTERVIEWS

As the engineering studies progressed, many questions arose concerning which functions the driver could perform and which functions the system should perform. Could drivers be expected

to determine whether or not an alert applied to them? Would drivers become very irritated with a low-capability system? Rather, should the system set up geographic warning zones? The system would then perform relevance filtering such that the driver would only be notified when their vehicle entered that zone. These warning zones could have various shapes and sizes depending on the situation and the relationship between the various roadways as illustrated in figures 26 and 27. Should drivers be able to summon help to the accident site? Should the vehicle electronics assume an accident has occurred when the air bag is released and automatically summon help or alert other drivers? All these capabilities are technically possible, but could result in a cost unacceptable to consumers.

To answer these questions, a marketing consultant was used to survey motorists using both qualitative "focus group" discussions and interactive computer surveys. Both techniques were used because high-involvement purchases, such as traffic-hazard warning systems, are based on several factors considered "jointly" rather than a single factor alone. Qualitative questioning forces consumers to reveal their priorities when making these complex decisions. Computer-interactive interviewing eliminates respondent "editing" and any interviewer bias. The results are distilled into utility weights that are indications of the relative worth customers place on the components of a purchase decision.

The focus group discussions had three objectives: to determine the overall driver reaction to the IVSAWS concept; to determine which features, issues, and price points were most likely to stimulate purchase of IVSAWS; and to determine those situations for which the driver felt IVSAWS would be the most helpful. In this focus group survey, a market survey specialist had a prepared discussion guide to ensure consistent questioning of each group of about 10 drivers. The discussions started with general questions of their driving habits and finished with very specific questions about preferred features in an automobile safety system. These surveys of both rural and urban drivers were conducted in July 1992. A total of 39 drivers from the Palmdale, California, area ***were*** interviewed for the rural focus group. A total of 46 drivers from the San Fernando Valley, California, area were interviewed for the urban focus group. Based on this total sample size, the variance in the statistics for the results is $\pm$ 10 percent at the 90-percent confidence level.

Almost everyone interviewed was interested in the general IVSAWS concept. A majority of those interviewed drive approximately 48.3 km/day. Most of the interviewees drive alone on week days. Half of the respondents go to wooded, mountainous, desert, or off-road recreational areas. Half of the respondents listen to traffic reports on a regular basis. Based on this sample driver profile, the general public is ready for IVSAWS now and 75 percent want a system for their current vehicle rather than wait to purchase with their next new vehicle. Thus, the after-market sales will be fundamental to IVSAWS success. The IVSAWS design cannot assume that the vehicle will have display or navigation systems. However, the IVSAWS should be modular so that IVSAWS can be compatible with and build upon the capabilities of future IVHS automotive systems.

The focus group interviews also yielded several key results in regard to system functionality and expected price. Because this is a safety system, price is not the most important attribute. Warning time, warning distance, and false alarms are of greater concern to the general public.

Having received the alert message, the warning effectiveness period is the time during which a driver can initiate an action that will increase the probability of successfully avoiding a hazard.

The public wants time to react to traffic hazards. Rather than perceiving IVSAWS as a way to avoid accidents, most people like to know what is ahead and want time to assess their

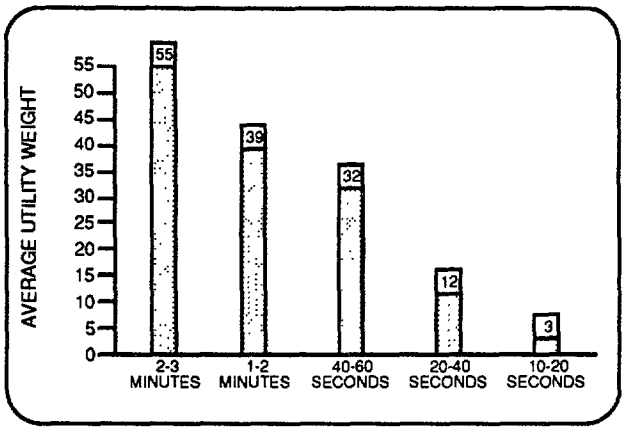

Figure 28. Warning-time attribute importance.

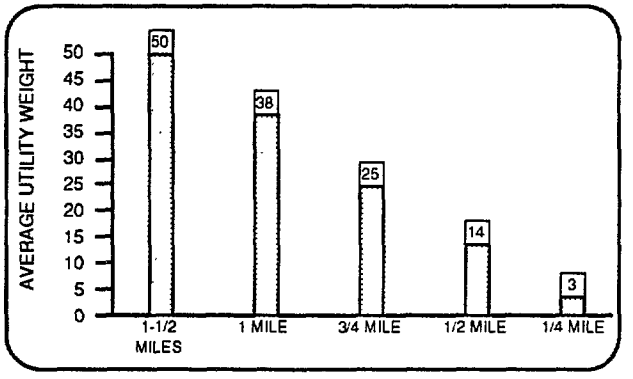

Figure 29. Warning-distance attribute importance.

alternatives. As shown in figures 28 and 29, the sooner they can be alerted in both time and distance from the hazard, the more drivers value that time.

Prior to the focus group interviews, IVSAWS project personnel believed that human factors issues would be a significant consideration in the system design and the primary rationale for the public's acceptance or rejection of IVSAWS. The focus group results confirmed these expectations. Drivers will not tolerate listening to alerts that do not apply to them. In accordance with figure 30, not more than one irrelevant alert per month was deemed acceptable. Otherwise, the drivers would lose confidence in the system. A simple broadcast approach does not provide the resolution and distinctions that consumers want. For the system to be effective, drivers feel that they should not be expected to sort pertinent from irrelevant alerts or to remember excessively premature alerts. Directionality and relative range should be resolved automatically so that alerts are stored and then presented to the driver at the appropriate time. Thus, the IVSAWS design must include a geographic locations capability and an electronic warning zone capability. Alerts can be associated with irregularly shaped or variable-sized zones and motorists should only be presented with those alerts upon entering these zones.

The maximum amount most drivers are willing to pay is between $250 and $350 as shown in figure 31. However, a more capable system with extra features such as location maps, mayday alert, and automatic theft-detection devices will enjoy greater market penetration than a basic warning system. Each of these options is worth an additional $50 to $100. The demand at $750

is basically the same as demand at $450. This overall utility weight pattern is typical for automobile systems such as car stereos.

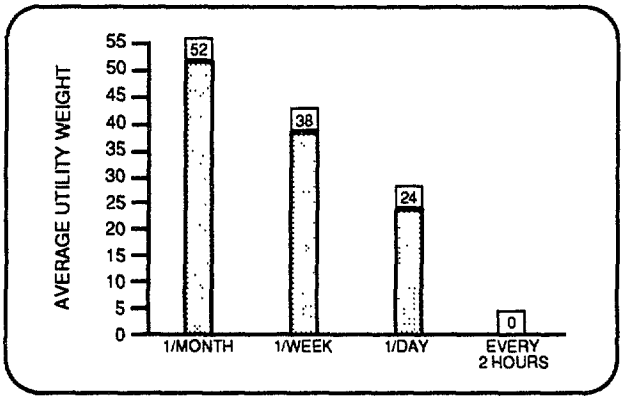

Figure 30. False-alarm attribute importance.

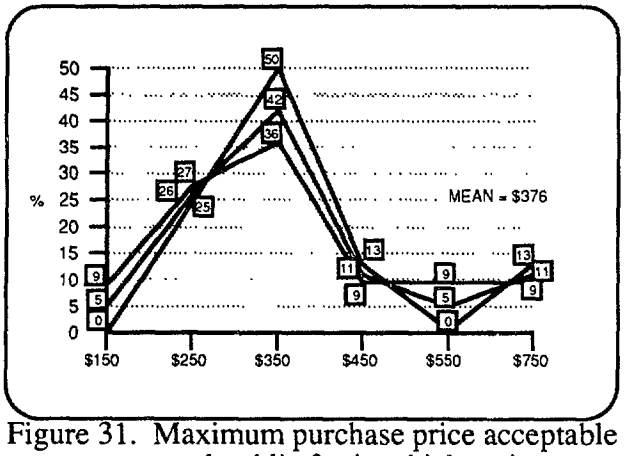

Figure 31. Maximum purchase price acceptable to general public for invehicle unit.

The focus group interviews also yielded other miscellaneous data. The participants generally agreed with UMTRI rankings of hazard scenarios about which they would expect to be alerted. Also, the participants strongly preferred a dual-visual and audio-alert mode with location maps, which is consistent with previous formal human factors studies.[39] The combination of video alert with icons and synthesized speech is 2-1/2 times more appealing than synthesized speech or icons alone. Position location systems such as GPS and Loran require a special antenna, but drivers were not at all sensitive to having this additional antenna, assuming it was the size of a cellular antenna. (The position location system Terrapin uses a standard FM antenna.) The participants felt insurance companies should offer lower rates to IVSAWS owners. There was some concern over system repairs and upkeep. A 3-year parts and labor warranty was considered fair. Overall, except for the additional price, everyone sampled preferred a vehicle with IVSAWS.

DEPLOYMENT COMMUNITY INTERVIEWS

IVSAWS will provide invehicle warnings to motorists for various roadway hazards in an attempt to mitigate scenarios that remain hazardous despite the application of traditional crash-reduction techniques such as additional mechanical signing. Currently, various agencies are responsible for detecting hazardous conditions and taking steps to increase motorist safety. These "safety" agencies include law enforcement organizations, fire departments, paramedics, construction crews, maintenance crews, and railroad operators. IVSAWS should be an extension of their normal duties and provide them with another method for communicating with the general public. Consequently, personnel from these various agencies will be responsible for establishing the warning zones that alert the drivers. Just as functionality and cost are critical to consumer acceptance of IVSAWS, minimal operational impact is critical to deployment professionals acceptance of IVSAWS. Therefore, personnel from various agencies were interviewed to determine whether they liked the IVSAWS concept and to determine their perspective on preferred IVSAWS operations.

Both interactive computer surveys and individual detailed discussions were used to interview the deployment community personnel. The computer surveys collected information from a larger population of professionals than could be cost-effectively interviewed indepth during this program. The purpose of the computer surveys was to collect information concerning acceptable system cost limits and desired system functionality. The purpose of the indepth interviews was to assess the deployment practicality of different operational concepts.

For the interactive computer surveys, 73 deployment professionals were interviewed. The survey sample combines information from these areas: Los Angeles metropolitan area, Orange County, Ventura, Oxnard, Santa Barbara, Kern County, Bakersfield, and San Francisco metropolitan area in California, as well as Reno, Nevada, and Phoenix, Arizona. The agency breakdown was as follows: 25 from police and law enforcement organizations, 16 from fire departments, 15 from paramedic and ambulance companies, 8 from road construction companies, 4 from railroad operations, and 5 from miscellaneous State agencies. The average population served by the deployment agencies is 191,000. On average, 163 vehicles are used by each agency. The typical respondent has 9 years of experience evaluating traffic hazard and emergency warning systems.

All those interviewed were very interested in a general IVSAWS concept. No single reason dominated the deployment professionals' reasons for liking IVSAWS other than it enhanced their capabilities for dealing with the general public. Final judgment would be based on a working demonstration. Regarding equipment interfaces, their biggest concerns were available space in the vehicle, location within the vehicle, and compatibility with current systems. Most interestingly, the warning times and warning distances that the deployment professionals felt that IVSAWS should provide in order to enhance safety essentially matched the warning times and warning distances that the general public felt that IVSAWS should provide in order to be useful. Cross tabulations indicated that paramedics and ambulance companies value advance warning time the most.

In the interactive computer surveys, the deployment professionals were presented only with the original baseline operational concept, In this baseline concept, warning transmitters in deployment professionah? vehicles or warning transmitters placed at a hazard site by a deployment professional would act as independently operated transmission nodes performing local area broadcasts. The deployment professionals would be responsible for determining the hazard specifics, loading these specifics into the transmitter, and then activating the transmitter. Many agencies are currently equipping their vehicles with Global Positioning System receivers so accurate reporting of emergency locations is a viable capability for IVSAWS. With this concept in mind, two-thirds of the deployment professionals felt it should take 1 min or less to

deploy IVSAWS as shown in figure 32. They were predominantly concerned with near-zero additional workload (e.g., on/off switch only) in emergency situations. The cross tabulations indicate that paramedic and ambulance companies put a special premium on fast deployment. Overall, all participants felt that their staff could operate the system after proper training time.

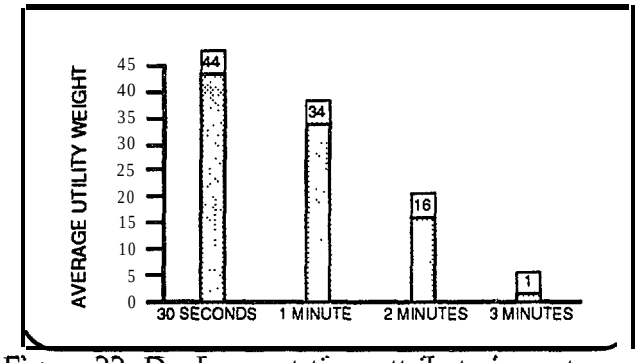

Figure 32. Deployment-time attribute importance.

For the responding agencies, over 200 hazard or emergency situations are encountered each week. The paramedics and ambulances have the highest incidence rate. With such an activity, cost is a real concern, especially during the prolonged recession in the Western States. Typically, only $72,000 or $0.38 per capita is budgeted for warning devices. On average, the police and law enforcement agencies budget the most with $82,000 or $0.53 per capita. One in three deployment professionals felt that IVSAWS would cost over $l,000/vehicle. Per figure 33, a $400 system is 2-l/2 times more appealing than the same system at $600, assuming all else is equal. Large cities and State agencies converge to a $500/unit affordability breakpoint for mobile, portable, and fixed-site transmitters. Towns and county agencies converge to a $250/unit affordability breakpoint. These costs were acceptable "under normal economic conditions." Hence, just as with the general public, because IVHS is ultimately a "consumer" electronics system for these deployment professionals, lowest possible cost is a critical parameter.

For the indepth surveys, 44 deployment professionals were interviewed. The primary purpose of these interviews was to investigate operational procedures of various deployment agencies and to solicit their evaluation of suggested IVSAWS operational concepts. Because these topics are more technical in nature, a technical specialist (rather than a market survey specialist) conducted the interviews. Since IVSAWS is a nationwide system, respondents were selected from urban, suburban, and rural agencies in order to identify any specific bias that may depend upon the nature of the community. The selected communities and their classifications are given in table 14. The agency breakdown was as follows: 16 participants from law enforcement organizations, 5 from fire departments, 2 from paramedic and ambulance companies, 7 from public works, 1 from railroad operations, and 13 from State transportation departments.

Each interview lasted about 2 h. A discussion guide was prepared to ensure consistent questioning. The guide outlined the following seven key topics during each interview: (1) IVSAWS concept review, (2) possible IVSAWS applications, (3) a technical tutorial, (4) operational concepts evaluation, (5) ranking of operational concepts, (6) identification of any new IVSAWS applications, and (7) IVSAWS interfaces to deployment agencies equipment.

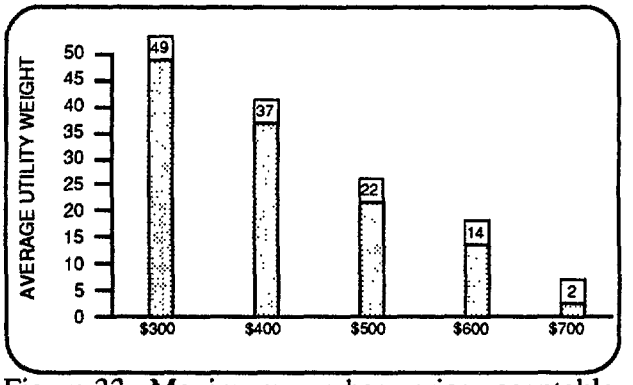

Figure 33. Maximum purchase price acceptable to deployment agencies for invehicle unit.

Table 14. Community classifications for indepth interviews.

Community	Classification	Population	Nearest Center	Distance
Phoenix, Arizona	Urban	765,000		
Tempe, Arizona	Urban	107,000	Phoenix	16 km
Gilbert, Arizona	Suburban	6,000	Phoenix	32 km
Youngstown, Arizona	Suburban	4,000	Phoenix	32 km
Reno, Nevada	Urban	101,000		
Carson City, Nevada	Suburban	32,000	Reno	48 km
Sacramento, California	Urban	276,000		
San Francisco, California	Urban	679,000		
Henderson, Nevada	Suburban	24,000	Las Vegas	24 km
Las Vegas, Nevada	Urban	165,000		
Cedar City, Utah	Rural	11,000	Las Vegas	274 km
Kingman, Arizona	Rural	10,000	Las Vegas	161 km
Cle Elum, Washington	Rural	2,000	Seattle	129 km
Ellensburg, Washington	Rural	12,000	Seattle	161 km
Moses Lake, Washington	Rural	11,000	Spokane	161 km
Ephrata, Washington	Rural	6,000	Spokane	161 km
Twin Falls, Idaho	Rural	26,000	Boise	217 km
Burley, Idaho	Rural	9,000	Salt Lake City	257 km
Rupert, Idaho	Rural	6,000	Salt Lake City	257 km

In general, the urban deployment agencies can afford IVSAWS technology better than their rural and suburban counterparts. Many urban agencies have or are planning to acquire geolocation systems, mobile data terminals, and advance traffic operations centers that could be used to support IVSAWS warning zone deployment tasks and, hence, reduce the overall IVSAWS costs.

Due to lower population bases and smaller budgets, suburban and rural agencies can least afford IVSAWS. Ironically, agencies supporting the rural highway system have the most interest in IVSAWS. Finding a way to preempt the adverse effects of high vehicle speeds and poor

visibility weather conditions is the main reason behind their substantial interest in IVSAWS. Cost breakpoint results agreed with the computer survey results.

As a group, the willingness of the selected deployment agencies to accept IVSAWS deployment procedures is high. Although the primary purpose of IVSAWS is enhanced driver safety, the deployment agencies also view the system as an added layer of protection for their field personnel when they are exposed to the roadway environment. This is particularly true of the roadway maintenance and law enforcement personnel who are often without the protection of a vehicular shell. Although all agencies are interested in IVSAWS and willing to adopt IVSAWS procedures, acceptability as a function of deployment community can be ranked as follows: (1) railroad operators, (2) construction and road maintenance crews, (3) law enforcement agencies, and (4) paramedics, ambulance, and fire departments.

Currently, locomotive engineers are required to perform an isolation procedure that makes one locomotive the "master" and all others "slaves." Incorporating IVSAWS warning zone deployment tasks into the existing procedure is viewed as a method of reducing liability exposure with little operational impact. The IVSAWS task would result in a warning zone that is projected in front and around the train.

Construction and roadway crews already set up roadway warning zones using primarily cones and barricades. The warning zone setup tasks can be extensive, sometimes taking more than 4 h. Procedurally, the steps required to establish electronic warning zones around the work zone were viewed as having little impact on highway operations provided that the tasks require minimal operator training and technical knowledge.

Law enforcement agencies were the most sensitive to the complexity of deployment procedures. In order to be the most effective at accident sites and roadway responses, the warning zones should be in place prior to an officer's separation from his or her vehicle in order to provide a layer of protection against vehicle strikes. However, this time is precisely when officers must devote their time and attention to essential functions such as lifesaving procedures. These professionals insist that IVSAWS should not delay an officer's departure from their vehicle by more than 5 s.

The most important application relevant to fire and medical response emergencies is notifying the general public of an approaching emergency vehicle. Since the electronic warning zones must move with the vehicle, there appears to be no other cost-effective operational concept than to install warning units in vehicles. Automatic updating of the area of coverage will need to be employed since it is unreasonable to task an ambulance or fire truck driver with this function. Deployment tasks (and the time required to perform them) is therefore limited to system initialization prior to vehicle departure. At most, emergency vehicle drivers will have to select one of several default warning messages and activate the system. Completely automatic system initialization and activation will also meet the short time periods that can be devoted to warning zone establishment.

Given these considerations, the deployment agency personnel were asked to evaluate three fundamental operational concepts. These concepts differ in the extent that the on-the-scene person and their respective agency participate in determining and establishing the alert area of coverage. A related system architecture then specifies a method for defining these alert zones and notifying the driver.

The first operational concept is a fully distributed approach. Warning units are installed in deployment professionals' vehicles, are placed temporarily at the hazard site, and are placed permanently at fixed locations. The deployment professionals at the hazard site would be responsible for determining the hazard specifics, loading these specifics into the warning unit,

and then activating the alert transmission. In terms of a system architecture, these transmitters act as independently operated nodes performing local area broadcasts. This was the original baseline operational concept and related system architecture.

The second and third concepts are centralized approaches based on an IVSAWS operations center. Warning units are still installed in deployment professionals' vehicles for mobile alerts, but all other alert messages are now broadcast from a regional operations center. In the second approach, personnel at the scene provide hazard information directly to their regional IVSAWS operations center. This IVSAWS operations center then determines the appropriate warning zone for that hazard and then activates the alert transmission. In the third approach, the personnel at the scene provide hazard information to their respective agency's communications center using their standard procedures. These various agency communication centers would then relay the hazard information to their regional IVSAWS operations center. This IVSAWS operations center determines the appropriate warning zone for that hazard and then activates the alert transmission. In terms of a system architecture, this is a hybrid approach with the mobile alert sites acting as independently operated nodes performing local broadcasts while the information for distributed temporary and permanent alert sites is consolidated at a centrally operated node performing regional broadcasts.

Optimally, IVSAWS operations would be completely transparent to both patrol and dispatch personnel because patrol operations are generally extremely time critical and dispatch operators are already overburdened in some agencies. Realistically, IVSAWS will have a procedural impact on either patrol operations or dispatch operations in order to define accurate alert area of coverage as indicated by the market survey and concept workshop conclusions. Based on the indepth interview responses, if a choice must be made between burdening dispatch operators and burdening patrol personnel with IVSAWS procedures, then the dispatch operators should be assigned the majority of the deployment tasks. Automated processing at the dispatch center will help minimize additional workload for the dispatch operators and help prevent excessive latency in the alert data. **All** the deployment agencies felt that minimizing operational impact on patrol personnel takes precedence. Thus, the deployment agencies overwhelmingly chose the third approach. A regional IVSAWS operations center receiving coordinated information from their respective agency's communication center is the most compatible with existing procedures and has the least impact on patrol personnel, especially at time-critical moments such as arriving at an accident or other emergency scene. A communication system architecture that could support this operational concept is currently under investigation by the Federal Highway Administration for the dissemination of data for other driver services.[27]

The cost of a regional IVSAWS operations center could not be determined at this time, but will probably be heavily dependent on the nature of the communities served. If patrol personnel talk directly to the IVSAWS operations center, then this approach does not have any cost benefits over the fully distributed warning unit approach. A special radio may be required to establish the dedicated links between the patrol units and IVSAWS center, resulting in similar invehicle costs as before. However, if patrol personnel continue with their standard procedures, then only existing equipment is used and no additional equipment costs are incurred. The agencies-to-IVSAWS center communication links can be dedicated telephone lines, whose relative costs are insignificant. Furthermore, in many instances, the regional IVSAWS operations center may actually be co-located with an existing fire department or law enforcement communications center.

CONCLUSIONS

The need for an IVSAWS-type system is real, especially in rural settings. IVSAWS and other IVHS projects should have the greatest success if they follow the incremental (modular) deployment model. Examples are the Interstate highway system and personal computers. The Interstate highway system is now nearing completion, but motorists were able to use each new installment as it was added to the system rather than waiting for the entire system to be completed before using any of it. Similarly, any personal computer can be iteratively enhanced to take advantage of improvements in the processor, hard disk, software, or video display modules. In the IVSAWS program, techniques are being investigated for providing invehicle alerts for various roadway hazards at a point sufficiently upstream from the hazard to enable the driver to take appropriate action. Scenarios have been identified in which warning transmitters are deployed either temporarily or permanently. The technical portion of this program consists of an analysis of the scenarios for such a system, an assessment of possible benefits, derivation of functional and technical requirements, and recommendations for an optimal system implementation as part of a total invehicle motorist information package.

The initial IVSAWS operational concept was independently operated transmission nodes performing local-area broadcasts. Two system communication system architectures — two-way spread-spectrum and narrowband GPS — were identified that supported this operational concept. As a result of the engineering studies, several scenarios were identified that were potential hazards, but required significantly more functional capability than the others in order to ameliorate the hazard scenario. Because the U.S. Department of Transportation's strategy for IVHS implementation in the United States is that IVHS will ultimately be funded by consumer purchases, the functional capability issues in IVSAWS were resolved by investigating the preferences of motorists who would benefit from this system and safety professionals who would deploy this system.

The focus group interviews yielded many significant results regarding expected functionality and the market potential for IVSAWS. The general public likes the IVSAWS concept and 75 percent want a system for their current vehicle. Adequate warning distance, adequate warning times, and lack of false alarms are the three system issues people value most. The maximum amount drivers are willing to pay is $400. Geolocation capability and electronic warning zone capability are necessary to prevent irrelevant alerts to motorists and to present these alerts to the driver at the most effective instance. Public safety deployment professionals also like the concept, but are predominantly concerned with near-zero additional workload in emergency situations. Many agencies are currently equipping their vehicles with GPS receivers so that accurate reporting of emergency locations is a viable capability for IVSAWS. Initial cost thresholds for deployment agencies average $500. The deployment community interviews resoundingly affirm that the IVSAWS operational concept should be changed from independently operated transmission nodes to centralized alert broadcasts from a regional operations center.

Fundamentally, since nothing currently exists from which IVSAWS could accurately extrapolate, these market assessment efforts have provided valuable information for performing the system capability tradeoffs within the design. The final market assessment results are summarized in tables 15 and 16. This information points the way to desirable configurations of product features that will maximize IVSAWS acceptance by both motorists and public safety professionals.

Table 15. Rankings of possible IVSAWS applications.

IVSAWS Application	UMTRI Study	Rural Conf.	Overall Value
Signaling Moving Emergency Vehicle Presence	8	6	14
Train at/Approaching Crossing	7	5	12
Environment-Related Hazard	7	5	12
Accident Site (Motorist Mayday Call)	7	4	11
Roadway Construction or Maintenance Zone	6	4	10
Infrastructure Hazard	5	3	8
Accident Site (IOC Alert Broadcast)	5	2	7
School Bus or Special Vehicle	4	2	6
Detour Advisory	4	2	6
Disabled Vehicle at Roadside	3	2	5
Traffic Backup (Queue Detection)	2	2	4

Table 16. Combined list of deployment professionals and motorist requested features.

- Long-Range Alerts (2 min at speed)
- Fast Alert Zone Deployment
- Few Irrelevant Alerts
- Compatibility with Current Procedures
- Mayday Capability
- Identify Distance to Hazard
- Compatibility with Current Systems
- Rugged Equipment
- Video Map Display
- Voice Alerts

CHAPTER 7. THE PRACTICALITY OF IVSAWS DEPLOYMENT BY RAILROAD OPERATORS

INTRODUCTION

This report presents the results of discussions held with representatives from a subset of railroad companies that could deploy the Invehicle Safety Advisory and Warning System (IVSAWS). The purpose of the discussions was to assess the deployment practicality of different IVSAWS system concepts that focused on the application of IVSAWS to reduce the frequency and severity of train-vehicle accidents at railroad grade crossings. The meetings were a supplement to interviews held in 1992 with a diverse sampling of the postulated IVSAWS deployment community. The initial round of interviews included representatives from law enforcement agencies, fire departments, ambulance operators, road construction companies, and State transportation departments.

On July 15, 1993, the Federal Highway Administration ordered a subsequent round of interviews to be held exclusively with railroad companies. The following reasons were cited:

- Railroad companies were underrepresented during the initial round of interviews.
- IVSAWS situation hierarchy development (task B) identified the railroad grade crossing situation as a prime IVSAWS application candidate.
- FHWA's desire to field an IVSAWS prototype during the proposed Vehicle Proximity Alert System (VPAS) demonstrations requires a better understanding of locomotive electronics and the railroad industry's perspective regarding grade-crossing technology.

From the perspective of those individuals and agencies that might be responsible for establishing the IVSAWS warning zones, deployment practicality can be evaluated using various criteria. For this study, the selected evaluation criteria were: (1) the willingness of an agency or company to adopt IVSAWS, (2) compatibility of IVSAWS deployment procedures with existing operating procedures, (3) the amount of time and attention required for deployment tasks, (4) system cost, and (5) compatibility of IVSAWS-specific equipment with existing agency hardware and software. During the initial round of interviews, it was found that the relative significance of the evaluation criteria is a function of the deployment agency. For example, law enforcement agencies focus on the amount of time and attention required for IVSAWS deployment tasks; the deployment of IVSAWS must not take longer than 3 to 5 s if the system is to be used at accident sites and during traffic stops. Road construction and road maintenance crews identified a low driver false-alarm rate as being key to their acceptance of IVSAWS; drivers must believe that they will encounter roadway workers when they receive an alert — otherwise, they will ignore the warning, thereby eliminating the additional protection IVSAWS could provide to the workers.

Conversely, the railroads concluded that a locomotive-based IVSAWS will need to be nearly autonomous and require little or no support from the locomotive engineer, thereby diminishing the significance of evaluation criteria that are operational in nature (items 2 and 3 listed above). In general, the primary barrier to railroad industry deployment of IVSAWS will be the reluctance of management to expose their companies to additional liability for train-vehicle collisions through introduction of a safety system for which they will be responsible. Moreover, unless mandated by law, IVSAWS deployment will only be possible if the railroad industry is convinced that the system will reduce the size and number of court awards granted to individuals involved in train-vehicle accidents. System performance issues dominate system operations issues.

INTERVIEW PREPARATION

Preparation for the interviews consisted of the following five steps: (1) identification of appropriate deployment agency interview candidates, (2) initial phone contact with the candidates, (3) distribution of an IVSAWS program overview package to interested candidates, (4) second phone contact with interested candidates, and (5) conduct of the interview.

All contacts were derived from the reference ***Jane's World Railways.*** The reference contains descriptions of all Class I railroads. The initial goal was to interview representatives from the six largest railroads in the United States. Initial phone contacts with perspective interviewees met with mixed results. With no previous exposure to IVSAWS, most contacts were generally noncommittal and wanted more information prior to consenting to an interview. CSX and Santa Fe railroads recommended that IVSAWS discussions be held with the Association of American Railroads (AAR), not individual railroad companies. The AAR is a rail industry trade association. Membership includes all Class I (major) railroads operating in the United States. Following the lead, the AAR was contacted. Subsequently, two interviews were held with the association,

The information package used to provide IVSAWS program background to prospective interviewees is included as appendix A. It includes a cover letter, program overview, system concept diagrams, brief system concept descriptions, and identification of IVSAWS-locomotive interface issues.

INTERVIEW PROCEDURE

After a brief IVSAWS overview was given to each interviewee, three IVSAWS concepts were presented. Then, each concept was discussed/evaluated. After the evaluations, the interviewees were asked to rank the system concepts with respect to overall deployment practicality. Finally, technical issues (e.g., IVSAWS-locomotive interface) were discussed. On average, the interviews lasted 3 h.

Agenda for IVSAWS Operational Concept Interviews:

- IVSAWS overview.
- IVSAWS application to grade crossing situation:
  - Non-instrumented crossings.
  - Instrumented crossings.
  - Problem crossings.
- Open discussion as required:
  - General impressions/acceptability.
  - Perceived problems.
  - Cost limitations.
  - Identification of preferred approach.
  - Technical and operational issues.
- Global Positioning System (GPS) receiver interface to locomotive and end-of-train device,
  - 220-MHz to 222-MHz transceiver interface to locomotive.
  - 220-MHz to 222-MHz transmitter interface to instrumented crossing.
  - 220-MHz to 222-MHz transmitter interface to non-instrumented crossing.
- IVSAWS installation and maintenance.
- IVSAWS initialization/other.

SYSTEM CONCEPTS

Three rail-based IVSAWS concepts are described below. All involve the use of a locomotive-based transmitter and invehicle receiver. The primary difference between the concepts is the number of radios used to relay the warning message from the train to the driver (zero, one, or several).

The system concepts were defined as a group of events required to establish a radiofrequency (RF) warning zone that when penetrated by IVSAWS-equipped vehicles, informs drivers that a train is at or approaching a grade crossing. At each step, the hardware and software required to support the operation was described.

System Concept 1

This concept uses a locomotive-based GPS receiver to determine the position of the train. The IVSAWS uses this information to define an area of alert coverage (AOAC) around the train. The AOAC vertex coordinates are broadcast by a narrowband transmitter. The GPS receiver operates in differential mode to improve AOAC resolution and accuracy.

As an option, a data base in the locomotive identifies the coordinates of grade crossings. Using this information, the IVSAWS projects the RF warning zone around the crossing, not the train.

Groups of Events:

- Event 1: An IVSAWS base station periodically transmits differential GPS psuedo-range and range-rate corrections. The corrections are received by the IVSAWS receiver in the locomotive that downloads the correction data to the GPS receiver. The corrections improve GPS accuracy to approximately $\pm$ 5 m.

- Event 2: The IVSAWS monitors the locomotive position using GPS (once-per-second position calculations). Successive measurements are used to calculate train velocity. Knowing train speed, train position, and length of train (downloaded prior to train movement), the locomotive's IVSAWS controller defines an AOAC in front of and around the train. The AOAC extension in front of the train is a function of train speed. The AOAC definition is in the form of a set of vertex coordinates (Universal Transverse Mercator). The coordinates specify a polygon around the train.

<u>Option</u>: Locomotive IVSAWS has access to a data base that identifies the coordinates of each and every grade crossing (approx. 329,000 in the United States). As the train approaches a grade crossing, the AOAC is defined as a polygon around the grade crossing, not the train. The AOAC is broadcast until the train passes the crossing.

- Event 3: Every 3 s, the locomotive broadcasts AOAC definition, train velocity (speed and direction), train length, and locomotive position using an IVSAWS transmitter.

- Event 4: Vehicles equipped with IVSAWS monitor vehicle position using differential GPS.

- Event 5: Vehicles equipped with IVSAWS receivers continuously monitor the media for alert broadcasts, including broadcasts from trains. When an alert is received, the alert data is downloaded to a data base, provided that the vehicle is within the defined AOAC.

- Event 6: Every second, a vehicular IVSAWS compares vehicle position to the set of AOAC's stored in its memory. If the vehicle is within an AOAC (and other checks are passed), a

driver alert distance (DAD) is calculated. The DAD defines the vehicle-hazard separation at which the invehicle alert is to be generated. The DAD is a function of vehicle velocity, vehicle position, train position, and train velocity. The DAD is calculated to provide a 6- to 10-s warning (6 to 10 s before vehicle and train paths could intersect). When the vehicle reaches the DAD (it may change as the vehicle and train move), the driver is alerted.

System Concept 2

The warning zone is activated by a locomotive-based radio. The radio on the locomotive may or may not be an IVSAWS transceiver.

Group of Events:

- Event 1: A crossing-based IVSAWS Warning Unit monitors the media for broadcasts by approaching trains. The warning units calculate the range and closing rate of an approaching train based upon information derived from the broadcasts.

- Event 2: When the train is a predetermined number of seconds “in front” of the crossing (based upon train-crossing separation and train speed), the IVSAWS Warning Unit projects an RF warning zone around the crossing. The warning zone AOAC definition is in the form of a set of vertex coordinates (Universal Transverse Mercator). The coordinates specify a polygon around the crossing. Since the grade crossing is stationary, the vertex coordinates can be entered during Warning Unit installation and can be permanently stored in the memory (no GPS receiver required).

- Event 3: Every 3 s, the Warning Unit broadcasts AOAC definition, train velocity (speed and direction), train length, and locomotive position using an IVSAWS transmitter.

- Events 4 through 6: Same as System Concept 1.

System Concept 3

Same as System Concept 2, except a network of radios is used to perform train detection. This system concept is for use in adverse communication environments in which the communication range between the locomotive and warning unit is limited (e.g., tunnel “upstream” of crossing). The warning zone is still activated by a locomotive-based radio. Again, the radio on the locomotive may or may not be an IVSAWS transceiver. However, the activating signal is relayed through the network of radios to the crossing-based IVSAWS warning unit which projects an RF warning zone using an IVSAWS transmitter.

Group of Events:

- Event 1: Warning unit monitors the media for locomotive broadcast information relayed to it through the network radios. The network radios calculate the range and closing rate of the approaching train based upon information derived from the broadcasts.

- Events 2 through 6: Same as System Concept 2.

INTERVIEWS

A total of seven interviews were conducted, five with railroad companies and two with the Association of American Railroads (AAR). The five railroads are all Class I (major) railroads. Table 17 provides a list of all Class I railroads. Those companies interviewed are listed in bold.

Table 17. Class I railroads.

Company	Miles of track operated	Gross revenue
Burlington Northern	**23,088**	**$4,558,650,000**
Union Pacific	**20,261**	**$4,662,956,000**
CSX	18,854	$4,336,375,000
Norfolk Southern	**14,721**	**$3,653,971,000**
Conrail	12,454	$3,136,548,000
Southern Pacific	12,143	$2,348,602,000
Atchison, Topeka, and Santa Fe	9,639	$2,153,535,000
Amtrak	**not available**	**$1,359,000,000**
Canadian Pacific (Soo & D&H)	**7,445**	**not available**
Chicago and Northwestern	5,573	$803,033,000
Illinois Central	2,766	$549,728,000
Denver and Rio Grande Western	2,246	$321,669,000
Kansas City Southern	1,682	$322,245,000
Grand Trunk Western	925	$270,436,000
Florida East Coast	442	$138,212,000

Union Pacific Railroad

Place: Omaha, Nebraska
Date: August 18, 1993

Union Pacific representatives were generally skeptical of all three IVSAWS system concepts. Their major concern was system reliability. Constant system self-testing should be employed such that there is no chance of an undetected system fault. Union Pacific representatives identified the locomotive as a very severe operational environment due to temperature extremes, vibration, and dirt. They also recommended that IVSAWS components installed in locomotives be built to military environmental/reliability standards.

A major implication of system reliability is responsibility for accidents at crossings protected by IVSAWS. In order for Union Pacific to embrace an IVSAWS concept, the representatives felt the Government must immune railroads from lawsuits involving IVSAWS. They recommended an approach similar to that used in Europe: If a vehicle hits a train (or vice versa), the driver of the vehicle receives a traffic citation (if he/she is still alive).

Union Pacific representatives noted that the majority of train-vehicle accidents occur when the train is traveling less than 48.3 km/h. Many accidents occur under switching conditions when the train is reversing direction. The "busiest section of track in the world" is between Given, Nebraska, and North Platte, South Dakota. On average, 100 trains per day travel this segment at an average speed of 64.4 km/h. This level of traffic could be used to set an upper limit on battery or solar panel capacity required to support trackside IVSAWS installations at crossings without

power sources. Union Pacific representatives also noted that “solar panels work well” in similar rail applications.

The representatives ranked the system concepts in the following order:

- System Concept 2. The representative thought this concept would be the most reliable, especially at crossings already equipped with train detection circuits. The IVSAWS warning unit could read the train detection control output to activate/deactivate the transmitter. It was mentioned that train detection circuits cost $20,000, installed. Full crossing instrumentation, including lights, bells, and/or gates, costs between $30,000 and $100,000 per crossing, depending on the level of instrumentation.

- System Concept 1. The representatives thought this concept would be less reliable than System Concept 2 due to the amount and complexity of the hardware installed in the train (two receivers, one transmitter, one controller). Also, there is no way to verify proper system operation since the link with the vehicles is open loop. Union Pacific did recognize a cost advantage to this concept since no instrumentation is required at crossings.

Option: The idea of storing a crossing location data base onboard locomotives was not well received. Accurate maintenance of such a data base was thought to be nearly impossible. If implemented, the data base would need to be national (all 320,000 crossings) since locomotives from one company often use another company’s track and locomotive lease agreements are common. Locomotives tend to migrate over large distances. Additionally, reprogramming of the data base via a radio link is “a must.”

- System Concept 3. This concept was rejected due to the amount of hardware involved. High cost and low reliability were cited as concerns.

Some of the discussion centered on the use of end-of-train devices (EOT’s) to determine the length of the train. The possibility of integrating a GPS receiver with an EOT was examined. Since the EOT periodically communicates with the lead locomotive, end-of-train position data from the GPS receiver could be relayed to the IVSAWS controller over this communication link. Union Pacific representatives had the following criticisms:

- EOT’s are not universally deployed, nor are they configured the same.
- EOT-locomotive communication is unreliable.
- EOT’s are mounted on the knuckle of the last car. A weight limit of 15.9 kg is imposed. Most EOT’s are already at the 15.9-kg limit.
- EOT’s are battery operated. A GPS receiver and controller would reduce already limited battery life.

Instead, it was recommended that train length be a programmable input to IVSAWS, downloaded prior to train movement by the lead locomotive engineer.

Association of American Railroads (AAR) - Transportation Test Center

Place: Pueblo, Colorado
Date: August 19, 1993

The primary purpose of the interview with AAR was to evaluate the Pueblo Transportation Test Center (TTC) with respect to test facility support requirements for the proposed Vehicle

Proximity Alert System (VPAS) demonstrations. The requirements are outlined as follows:

1. Equipment Requirements

a. Train track with an instrumented multi-track (at least two) grade crossing. Instrumentation must provide digital "train present" control output that can be connected to prototype VPAS hardware. Crossing must have a 12-VDC power supply (10-A minimum). Track must be long enough to support train speeds of 64.4 km/h. VPAS prototype testing will last 8 to 12 weeks (continuous, sometime during July 1994 to October 1994), including initial setup and human factors testing.

b. Two trains. Each train must be long enough to verify operation of VPAS end-of-train detection functions (lo-car minimum). Locomotives must have space to install prototype VPAS hardware (e.g., computer, power converter, transceiver, antennas). Locomotive must provide 12-VDC power. Trains will be required for 8 to 12 weeks.

c. Office space for four engineers (two Hughes, one FHWA, one VPAS demonstration contractor) with phones, copy machine, and facsimile.

d. Lab space with a minimum of two large test benches with access to AC power.

e. Building or enclosure with AC power and access to antenna mast (> 30.5 m) for housing base-station transmitter.

f. Test vehicles. two vans will be required to serve as test vehicles. One other support van will be required.

g. Secure storage for VPAS hardware and test equipment (approx. 91.5 m^2).

h. Machine shop access for fabrication of equipment mounts and brackets.

2. Time and Materials

a. Support personnel: demonstration contractor(s) and the FHWA will provide personnel to operate/maintain VPAS equipment and collect test data. AAR will provide all other support personnel (e.g., locomotive engineers, locomotive technicians).

b. Non-durable materials. Gas, locomotive fuel, mounting brackets, wire, etc. Also includes insurance, if required.

c. AAR will provide personnel to assist in development of test scripts for distribution to demonstrators. AAR will evaluate and order changes to demonstrator test plans.

d. AAR will assist FHWA and Federal Railroad Association (FRA) with VPAS prototype evaluations. AAR will document evaluations.

Based upon discussions with site representatives and after a 2-h site survey, it was determined that the TTC will meet VPAS demonstration requirements. TTC representatives were asked to submit a bid in support of the demonstration. This action was deferred pending a submission of a proposal and approval by the AAR's Washington, DC, office.

Burlington Northern (BN) Railroad

Place: Fort Worth, Texas
Date: August 20, 1993

BN representatives noted that approximately 500 deaths per year are attributable to grade crossing accidents; therefore, utilization of IVSAWS to inform drivers of train proximity has strong merit potential.

The representatives ranked the system concepts in the following order:

- System Concept 2. BN preferred this concept due to its compatibility with currently instrumented crossings. Roger Nelson mentioned that 50 percent of grade crossing accidents occur at instrumented crossings. Ideally, IVSAWS would replace all other forms of instrumentation. That is, every other grade crossing system would be eliminated. If so, some sort of "intervention" might be required to place liability for accidents on drivers. This would open the door for an off-the-shelf "dash mount" IVSAWS market since drivers would want to protect themselves. If automobile manufacturers were required by law to install IVSAWS units in vehicles, they might insist upon the installation of automotive "black boxes."

- System Concept 1. This concept was not favored since no interface between IVSAWS and existing track-based train detection circuits is supported. The representatives were also concerned with this concept's potential for false driver alerts.

Option: Projection of the IVSAWS warning zone around the grade crossing was preferred to projection around the train. False driver alerts would be minimized. Storing a crossing-location data base on board locomotives "is not that big of a problem" since the makeup of crossings is not dynamic. The data base would need to be: (1) national, (2) maintained by the FRA, and (3) automatically updated within locomotives when changes occur. The FRA currently correlates every crossing to a unique DOT number; however, the data base does not include the crossing latitude/longitude position required by IVSAWS. The updates could be performed using the developmental Automatic Train Control System (ATCS), a trackside transponder-based system, which should be deployed by the end of this decade. ATCS RF communication is projected to operate between 890 MHz and 920 MHz.

- System Concept 3. This concept was viewed as a necessary extension to System Concept 1 in situations where direct communication between the grade crossing and locomotive transceiver is blocked.

With any IVSAWS implementation, BN recommended a constant 45-s advance warning time. Immediate system turnoff after train departure from the crossing was highly recommended in order to minimize driver irritation and maximize driver confidence in the system. IVSAWS may also need to address system confusion factors including multi-train, multi-track crossing situations, particularly situations where different railroads own separate tracks and locomotive configurations may differ.

BN's preference for a crossing-based IVSAWS transmitter (System Concept 2) is partially motivated by economics. Railroad crossings, including instrumentation, are traditionally ordered by and paid for by Government agencies. Maintenance is usually provided by railroad companies. Thus, from BN's perspective, a trackside IVSAWS is more cost-effective than a locomotive-based IVSAWS.

BN was interested in other potential **IVSAWS** applications, particularly train control and train-to-train collision prevention prior to deployment of the **ATCS. IVSAWS** would be an "application of GPS as a non-vital safety overlay." Architecture requirements include an onboard GPS set, train-to-train radio data link, and non-proprietary computer. Operationally, the locomotive engineer would enter route information, including track ID, via a work-order system embedded in the computer. Track ID and train position would then be periodically broadcast by **IVSAWS** and received by nearby trains. If two trains on the same track violate minimum separation criteria, alarms would sound and, possibly, automatic braking would be applied.

Canadian Pacific (CP) Railroad

Place:	Montreal, Canada
Date:	August 31, 1993

CP was cautiously receptive of the IVSAWS concept. Liability for IVSAWS equipment and system reliability under "special circumstances" were cited as major concerns. Special circumstances include parallel tracks, short trains (e.g., locomotive only), and spotty deployment of IVSAWS among locomotive fleets (i.e., some locomotives have IVSAWS hardware, some don't). The "only way" to gain railroad industry acceptance of IVSAWS is to: (1) "relieve [the] railroads of all liability" for system failures and (2) have the Government pay for IVSAWS installations.

CP was also concerned with the possibility of drivers adopting a false sense of security when their cars are equipped with IVSAWS. CP recommended that IVSAWS always generate an invehicle alert when drivers approach a crossing. Thus, if drivers don't receive a warning, they can detect system failures. If a train is in the vicinity of the crossing, the warning message could be changed to reflect train proximity.

Overall, CP rated System Concept 1 and System Concept 2 similarly. System Concept 3 was viewed as a special case of System Concept 1. CP made the following comments regarding the concepts:

- System Concept 1. CP stated that, overall, this concept would be the most cost-effective since there are many more grade crossings than locomotives. From a system-level viewpoint, putting hardware on the locomotive instead of at the crossing makes economic sense. From the railroads' viewpoint, this concept is not economically attractive since the companies traditionally pay for warning devices installed on trains. Today, minimal instrumentation (simple train detector with lights and bells) costs approximately $20,000 per crossing.

Any IVSAWS that could relay train position back to dispatch would be "received well" by railroad companies. CP noted that differential GPS operation would be required in Canada due to poor satellite positions at northern latitudes. IVSAWS would be "better without GPS." As an alternative, a transponder-based system was suggested in which the lead locomotive receives position updates from beacons mounted on train control signals. Locomotive wheel tick sensors would be used to derive train position between signals. It was noted that this solution would probably be more expensive and less accurate than GPS.

The use of GPS receivers to determine train length received considerable attention. At the end of a train, the GPS receiver would have to be mounted with the end-of-train (EOT) device. However, EOT's are already crowded with electronics and integration would be difficult. Furthermore, EOT's are mounted on to the knuckle of the last car and sit low with respect to the car's outline. In this position, blockage of GPS signals is inevitable. CP stated that train length

is already available via other locomotive systems; therefore, geolocation devices mounted on to the end of the train are not necessary.

CP thought a crossing location data base would be difficult to maintain if updates within the locomotive had to be performed manually. "When ATCS is implemented [see BN writeup, above], the data base option is feasible; in fact, the data should already be there [at ATCS transponder nodes] ." In concept, local crossing locations would be automatically downloaded to locomotives while in transit.

- System Concept 2. In some situations, IVSAWS may be installed at crossings already instrumented with lights, bells, and/or gates. "Guarantee that the [crossing] transmitter works the same as [existing] crossing [instrumentation]." Coordination will eliminate driver confusion associated with conflicting "train present" declarations from different warning systems. If lights are active, IVSAWS should also be active. When the lights turn off, IVSAWS should stop generating invehicle alerts. This coordination can be achieved by providing an interface between the crossing-based IVSAWS transmitter and the train detection circuitry that activates existing instrumentation.

- System Concept 3. The use of a "string" of radios to relay train detection status back to a crossing-based IVSAWS transmitter was not well received. CP stated that this concept would be too expensive to be practical. Instead, crossings with poor communication path geometry should be equipped with traditional track-based train detection circuits. As an alternative, CP suggested the use of a leaky cable to receive and forward a train's IVSAWS broadcast to the crossing-based warning unit.

Amtrak

Place:	Philadelphia, Pennsylvania
Date:	September 1, 1993

Amtrak was very enthusiastic about the application of IVSAWS to minimize the frequency and severity of railroad grade crossing accidents. Amtrak averages one accident per day at grade crossings. It is a "serious problem." However, "crossing-to-vehicle notification will be a problem because of the frequency of illegal crossings." Drivers will ignore invehicle warnings and, thus, even with IVSAWS, become involved in collisions with trains. Amtrak noted that the average driver will wait 30 to 40 s before crossing a track with active warning devices at which a train can neither be seen nor heard. School buses and vehicles carrying hazardous materials are a "good first choice" for vehicular deployment of IVSAWS since drivers of these vehicles are required to stop at crossings anyway. It was recommended that such priority vehicles be required to carry IVSAWS via congressional mandate.

Amtrak was concerned about "what happens" when the train-based IVSAWS fails. A redundant system was recommended. The locomotive engineer "must know when the system fails." This extends to IVSAWS architectures with and without train-based components.

Amtrak did not express a preference for any system concept. System Concept 3 was viewed as a special case of System Concept 1. The following comments were made regarding System Concept 1 and System Concept 2.

- System Concept 1. Amtrak preferred the option of using a locomotive-based data base to limit the area of alert coverage to the grade crossing intersection, thereby minimizing false driver alerts. Data base management was not viewed as a significant problem. Without a data base, it was thought that "limited-access identifiers" could be used to limit alert dissemination. For example, a "no-interstate" identifier could be set within the warning message to prevent

cars traveling the Interstate from being warned. This capability would require IVSAWS to match vehicle position to the type of road being traveled (i.e., map matching), which is beyond the scope of a first-generation IVSAWS.

- System Concept 2. Amtrak felt that timely deactivation of the IVSAWS warning zone (i.e., turning off the ground-based IVSAWS transmitter) once a train passes the crossing is important. It was recommended that since length-of-train data is available, IVSAWS should use its GPS to determine when the end of the train passes the grade crossing. Alternatively, a, traditional island circuit could be installed to inform IVSAWS when the train has passed.

Association of American Railroads (AAR)

Place: Washington, D.C.
Date: September 2, 1993

The AAR was cautiously receptive of the IVSAWS concept. Three major obstacles to railroad industry acceptance were cited:

- Industry will be unwilling to accept a perceived increase in liability exposure due to IVSAWS.

- Changing the industry's skeptical attitude towards the application of new technology to grade crossing systems will be difficult - expect strong opposition from the Brotherhood of Signal Railmen.

- Cost - the cost per crossing must be less than traditional motorist warning systems.

The representatives ranked the system concepts in the following order:

- System Concept 2 is "better from a liability viewpoint since records can be easily maintained." Each time a train passes a grade crossing, the system can record the train detection and motorist warning events. Logistically, the concept "is flawed" since every locomotive that runs on U.S. tracks will have to be equipped with IVSAWS before the system can be turned on. Exceptional train movements may also be a problem unless IVSAWS is designed to accommodate them. Three particular movements were cited: following train movements, opposing train movements, and multi-track train movements. It was recommended that this concept employ a bimodal warning system in which a strobe or flasher is mounted with the crossing-based transmitter.

- System Concept 1 was "not favored" since drivers traveling roads without railroad crossings will be warned about approaching trains. A locomotive-based crossing location data base would solve this problem, but the data base is "not going to happen" due to the data base maintenance expense and the logistics associated with data base dissemination.

- System Concept 3 was rejected due to the amount of hardware involved. Each additional radio in the local area network will "increase cost and reduce reliability." It was recommended that traditional track-based detectors be used to trigger IVSAWS in situations in which train-to-crossing communication is unreliable.

Norfolk Southern Railroad

Place: Alexandria, Virginia
Date: September 3, 1993

Norfolk Southern representatives made the following general comments regarding IVSAWS:

- IVSAWS must be a warning system that is secondary to existing warning systems. It "cannot be a stand-alone system."

- In order to be effective IVSAWS "needs to seize the vehicle because drivers will ignore the warning."

Three obstacles to IVSAWS deployment were cited:

- Putting any new warning system on the train will be resisted. The technically trivial train whistle is often the subject of lawsuits. Managers will strongly oppose a warning system as sophisticated as IVSAWS.

- Propagation of IVSAWS into private vehicles will be market-driven and thus gradual. Managers will oppose installing transmitters if most vehicles can't receive the IVSAWS signal.

- Applying IVSAWS to high-priority vehicles first is the best way to begin IVSAWS deployment. However, legislation requiring high-priority vehicles (e.g., school buses) to be IVSAWS-equipped will be difficult and slow to obtain. Without legislation, rail companies won't install IVSAWS in locomotives.

The system concepts were ranked in the following order:

- System Concept 2. It was felt that this concept would most effectively issue warnings to drivers since the IVSAWS transmitter is crossing-based at known locations. The alert zone can be tailored to each crossing without the use of GPS.

- System Concept 1. This concept relies on a crossing location data base to limit the area of alert dissemination to the crossing locale. The data base is "currently unmanageable."

- System Concept 3. This concept was viewed as an extension to System Concept 2 and was not evaluated separately.

CONCLUSIONS

The primary barrier to railroad industry deployment of IVSAWS will be the reluctance of management to expose their companies to additional liability for train-vehicle collisions through introduction of a safety system for which they will be responsible. Moreover, unless mandated by law, IVSAWS deployment will only be possible if the railroad industry is convinced the system will reduce the size and number of court awards granted to individuals involved in train-vehicle accidents.

As a group, the railroad industry is unimpassioned toward the application of IVSAWS to help reduce accident frequency and severity at grade crossings. On one hand, representatives interviewed at Burlington Northern and Amtrak were enthusiastic towards its application. On the other hand, Union Pacific representatives were opposed to the introduction of IVSAWS technology at grade crossings. In the middle, the Association of American Railroads, Canadian Pacific, and Norfolk Southern have a "wait and see" attitude. In order to gain wide industry acceptance, IVSAWS train detection and warning dissemination subsystems will need to demonstrate nearly flawless performance.

The railroad industry is very concerned about IVSAWS human factors issued as they apply to drivers. IVSAWS should not increase the level of irritation induced by the presence of trains at grade crossings. IVSAWS should not confuse drivers. Thus: (1) false alerts need to be minimized (implies high-resolution area-of-warning-coverage definition), (2) advance warning times should be consistent (warning function should account for speed and position of automobile and train), (3) IVSAWS should deactivate as soon as train leaves crossing, and (4) IVSAWS warnings should be consistent with warnings generated by other grade crossing warning systems, thus avoiding data conflicts.

System Concept 2 is favored over System Concept 1. Due to the handshaking that occurs between the locomotive and crossing-based transceivers, it is believed that System Concept 2 has a higher probability of detecting system faults. The rail industry's preference for an IVSAWS with crossing-based transmitters (System Concept 2) is also motivated by economics. Railroad crossings, including instrumentation, are traditionally ordered by and paid for by Government agencies. Maintenance is usually provided by railroad companies. Thus, from the railroads' perspective, minimizing the complexity of locomotive-based IVSAWS installations will be more cost-effective.

System Concept 3 should be abandoned. High cost and low reliability of a network radio set were consistently identified as system flaws. It is recommended that traditional track-based train detectors be used to trigger IVSAWS in situations in which train-to-crossing communication is unreliable.

Integrating a GPS receiver with an end-of-train (EOT) device in order to automatically determine train length is not practical. Train length is available to IVSAWS via other train systems. Furthermore, GPS and EOT architectures are not compatible.

The railroad industry is split on the feasibility of maintaining and distributing a crossing-location data base. Near-term IVSAWS access to such a data base does not appear possible. However, the emerging Automated Train Control System (ATCS) should make an automated crossing-location data base distribution possible. Still, the issue of responsibility for data base maintenance will need to be resolved before the data base can be fielded.

CHAPTER 8. FUNCTIONAL DEFINITION

INTRODUCTION

This analysis defines the functions to be embedded within a first-generation Invehicle Safety Advisory and Warning System (IVSAWS). Broadly, it specifies the functional support that is required to establish an electronic warning zone around a roadway hazard or advisory site. It also defines the functions needed to present the warning or advisory data to a driver once a vehicle has penetrated an electronic warning zone. The functional requirements are a product of the following six studies that were conducted as part of the IVSAWS program:

Situation Identification and Prioritization

This task identified candidate advisory, safety, and hazard situations using recent rural and urban highway accident data and input from transportation engineering specialists. The situations that could be helped by an IVSAWS were identified for further study. The results of this study are documented in the IVSAWS task B final report.

Driver-Alert Warning System Design

The Driver-Alert Warning System (DAWS) represents the vehicular subsystem used to convey information concerning advisory, safety, and hazard situations to the driver of the vehicle. The DAWS study used anthropometric analysis and mockups to evaluate the IVSAWS human-machine interface with respect to ease of IVSAWS message perception and correct driver response to warnings and advisories. The results of this study are documented in the IVSAWS task E final report.

IVSAWS Communication Subsystem Architecture Tradeoffs

This study evaluated candidate IVSAWS communication subsystem architectures with respect to the following set of evaluation criteria: (1) functionality of one-way versus two-way communications, (2) relative advantages and disadvantages between spread-spectrum and narrowband communications, (3) relative advantages and disadvantages between Global Positioning System (GPS) and two-way ranging, and (4) frequency allocation. The results are documented in the IVSAWS Engineering Change Proposal 2 final report.

IVSAWS Market Assessment

This study evaluated driver receptivity to the IVSAWS concept and identified purchase decision criteria and desired system features. The results of this study are documented in the report titled *Market Potential Assessment of IVSAWS Among the General Public and Deployment Professionals.*

IVSAWS Concept Workshop

The initial hazard scenario identification (task B) was performed by the University of Michigan Transportation Institute (UMTRI). This workshop was an opportunity to interact with a broader representation of the transportation community and cooperatively refine the preliminary IVSAWS applications. The workshop activities and results are documented in the IVSAWS Concept Workshop report.

IVSAWS Deployment Community Interviews

This study evaluated the deployment practicality of different IVSAWS operational concepts from the perspective of those individuals and agencies that might be responsible for establishing the warning zones. The results are documented in the report titled Assessment *of IVSAWS Deployment Practicality*.

The results from these studies provide the inputs to the systems engineering process used to develop and evaluate the IVSAWS functional requirements. When properly implemented into the functional requirements, these analysis inputs should enable IVSAWS to fulfill its primary objective — to increase the probability of correct driver response to hazardous roadway conditions. The systems engineering process used for the IVSAWS program is a hybrid of two systems engineering methods, Quality Function Deployment and Structured Requirements Specification.

METHODOLOGY

Quality Function Deployment (QFD) and Structured Requirements Specification (SRS) are two methods that can be used to aid product planning and ensure that key functions are identified and implemented into a product design. The process used to identify the IVSAWS functional requirements is an adaptation and combination of QFD and SRS.

This analysis/documentation is not a tutorial for either QFD or SRS. Without a top-level understanding of these methods, many of the charts and figures contained in the appendices will confuse the reader and appear to have little relationship with each other. An understanding of QFD and SRS can be obtained by reading the following texts:

- *Strategies for Real-Time System Specification,* by Derek J. Halley and Imtiaz A. Pirbhai.
- *Better Designs in Half the Time,* by Bob King.

The following description of the QFD and SRS processes are provided as an introduction to QFD and SRS.

Quality Function Deployment

Figure 34 shows the QFD design flowchart. However, QFD is more than a design plan. QFD starts with product planning and continues through the product life cycle, including customer support once a product has been introduced into the marketplace. It is a method for designing a product based upon customer demands in order to give the customer the best possible product.

Under this contract, the key deliverable to the Federal Highway Administration is a basic system design (or designs) that is (are) in sufficient detail to support prototype system development. No product will be built. That is, no deliverable hardware or software will be produced. Thus, IVSAWS QFD will end at the product planning stage (see figure 34).

Figure 35 shows the QFD design flowchart as it has been tailored for IVSAWS. Due to fiscal constraints, schedule constraints, and the nature of the IVSAWS "product," some elements of the product planning design flowchart will not be applied to the IVSAWS design flowchart.

There is no product competing with IVSAWS. Rather, IVSAWS is a Government study program, not a system to be produced and sold by the Federal Highway Administration. Thus,

competing products and patent rights are not surveyed. As part of the IVSAWS communication subsystem design task C, existing systems were examined in order to determine if they could be used or adapted for IVSAWS. However, these systems will not be viewed as products competing for market share.

A quality study, draft product plan, process failure mode analysis, value engineering effort, and pre-design testing are beyond the scope of this phase of the IVSAWS program.

Market requirements have been derived from the six studies identified previously. The IVSAWS Market Assessment is, in effect, the matrix data analysis. Thus, the IVSAWS QFD study begins with development of the quality table (see figure 35). Detailed information is included in the IVSAWS appendixes.

Structured Requirements Specification

The QFD charts used to perform the IVSAWS product definition compare IVSAWS functions with respect to customer demands, IVSAWS failure modes, quality characteristics, and subsystem components (mechanisms). Candidate IVSAWS functions must, therefore, be identified in order to perform the tradeoffs. Structured Requirements Specification is an organized method by which to identify functional requirements.

The centerpiece of the method is the requirements model (included in the IVSAWS appendixes). The model can be divided into two basic components, the process model and the control model. The process model breaks a system into its component functions, shows the data flows into and out of the functions, and describes how the functions operate on the data flow inputs in order to generate the data flow outputs. Likewise, the control model shows the component functions and the control flows into and out of the functions. The basic distinction between the process model and the control model is that the process model describes how the component functions work and the control model describes when the component functions work.

Figure 36 shows the requirements model structure. The data flow diagram (DFD) is used to represent the process model (see IVSAWS appendixes). The data flow diagram contains processes, data flows, and data stores. In the IVSAWS process model, processes are depicted as rectangles with rounded corners, data flows are represented by solid lines with arrows at the end, and data stores are shown as open-ended rectangles. Data flows represent information, in any form, ranging in complexity from a single bit of information to a complete description of the universe. Data flows can split or merge. Whether merging or splitting, information is always conserved; new information does not appear as the result of a merger and no information is lost as the result of a split. Data stores are merely data flows that remain constant when the input data source vanishes. Data stores retain their value until replaced by new data arriving at the store.

Process Model

The process model has a parent-child structure. That is, a parent process appearing on a data flow diagram is defined by another data flow diagram, itself composed of "child" processes, data flows, and data stores. For example, process 1.1 (Configure Warning Zone) on DFD # 1 is defined by DFD # 1.1. DFD #1.1 has four child processes, 1.1.1 through 1.1.4. The child

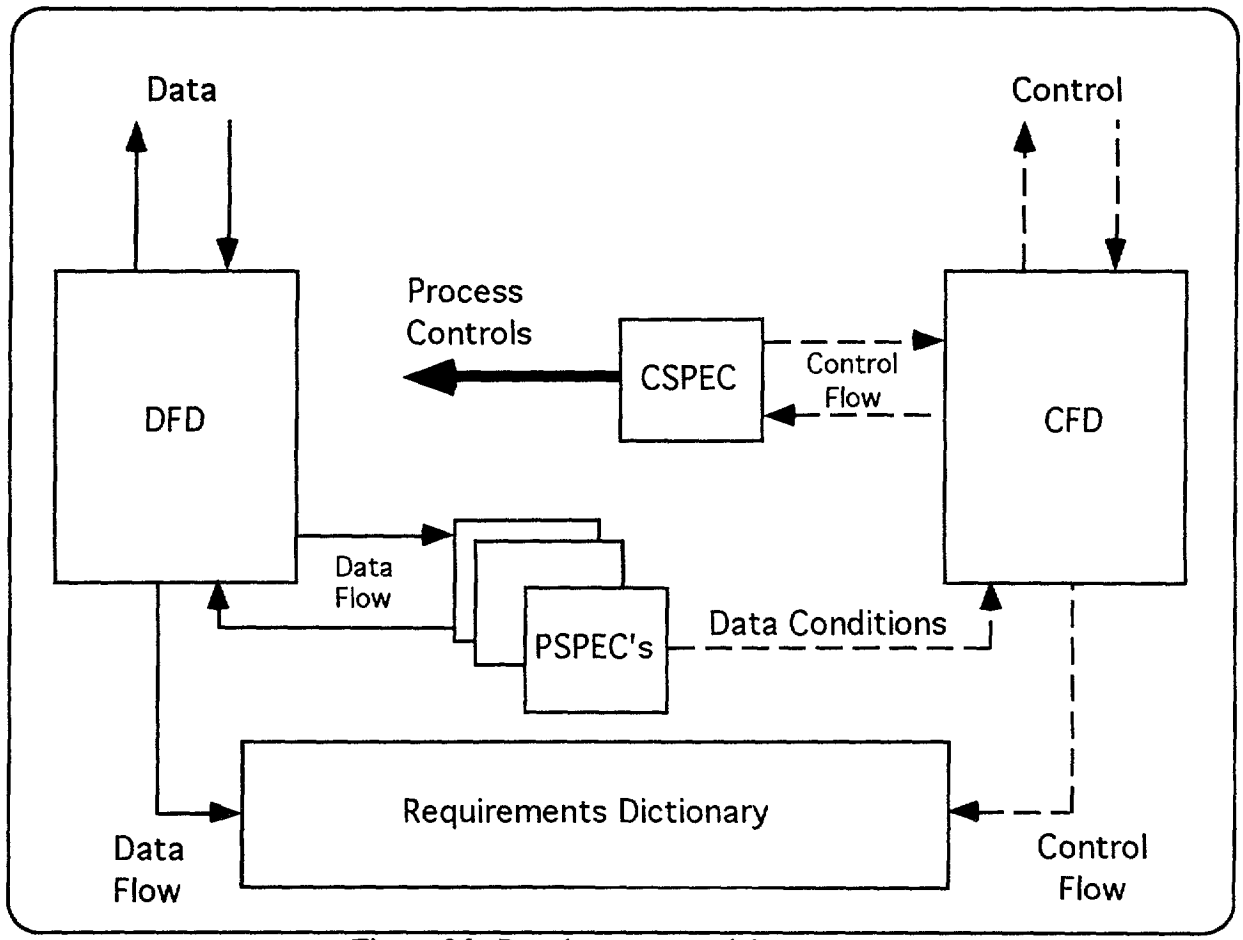

Figure 36. Requirements model structure.

processes and data flows do not introduce new functions or information into the system; they only describe the system in more detail. Thus, all inputs to a parent data flow must be used by the child processes. In DFD # 1.1, data flows originating from a circle (i.e., "connector") without a number inside represent data flows that are inputs to the parent process. Conversely, data flows terminating into a blank circle are outputs of the parent process. Circles with numbers inside of them are data flow connectors between child processes on the same data flow diagram. They are used only to improve the readability of the DFD.

The child processes themselves have children and the parent-children decomposition continues until a process is compact enough to be defined precisely and briefly in a process specification (PSPEC). The process specification describes, in text or through the use of formulas, how the outputs are generated from the inputs.

Control Model

The control model uses the process model as its basis. For each DFD there is one control flow diagram (CFD). However, if a process is completely data driven, its CFD is usually omitted from the specification. The CFD's map control flows between the same processes that are shown in the corresponding DFD. The control flows are shown as dashed lines on the CFD. Unlike a process model's PSPEC(s), the control specifications (CSPEC(s)) originate in between the processes at CSPEC interfaces indicated by a bar symbol on the CFD (see IVSAWS appendixes).

The CSPEC specifies control processing for the processes on the DFD. The inputs to the CSPEC are control flows. Special control flow inputs called data conditions are generated inside PSPECs; they appear on the CFD, not the DFD. The primary outputs of CFD's are process controls. Process controls enable and disable DFD processes. Thus, the CSPEC specifies under which conditions a DFD process is to operate or be disabled. Process controls are not usually shown on the CFD or DFD. CSPEC's may also output control flows that are used as inputs to CSPEC's at a parent or child level. There is, however, only one CSPEC per CFD.

Requirements Dictionary

The requirements dictionary, or data dictionary, completes the requirements model structure. It contains an entry for each and every control flow and data flow identifier, along with its definition.

FUNCTIONAL DEFINITION

The definition of a function includes: (1) a statement of what the function does and (2) how well the function must be performed (i.e., functional requirement). Functional definition can be performed at different levels of abstraction. The levels tend to be nested, with a functional definition at one layer encapsulating several definitions from a lower-level layer. IVSAWS levels of abstraction can range from system-level definition to component-level definition (e.g., the function to be performed by a resistor or line of code). Figure 37 illustrates the concept of nested levels of abstraction. At present, the scope of IVSAWS functional definition includes only the system and subsystem layers.

Within each layer, several cost-functionality boundaries may exist. That is, functions can be grouped such that removal of a single function from the group does not significantly impact the price or effectiveness of the product as a whole (provided, of course, there is more than one function in the group). Figure 38 illustrates that at the system level, two IVSAWS cost-functionality boundaries exist.

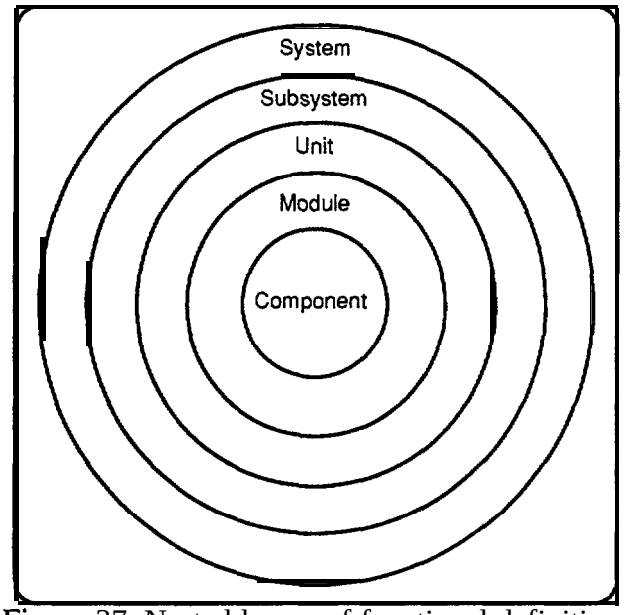

Figure 37. Nested layers of functional definition,

The first boundary separates "basic" system functionality from "enhanced" system functionality. Basic system functionality identifies the set of roadway scenarios for which IVSAWS can provide coverage at a cost that is "low" with respect to the effectiveness of IVSAWS application. Effectiveness is measured in terms of scenario frequency, severity, and the judged value of IVSAWS towards reducing accidents in each scenario. Enhanced functionality identifies the set of roadway scenarios for which the value of IVSAWS application (again, measured in terms of cost and effectiveness) is questionable.

The second boundary separates "enhanced" system functionality from "extra" system functionality. Extra-IVSAWS functionality identifies the set of roadway scenarios for which the application of IVSAWS is not recommended. In figure 38, the cost factor could assume one of five values as described below:

(1) Application requires a transmitter (cost factor = 0.5).
(2) Application requires (1) and a geolocation subsystem (cost factor = 1).
(3) Application requires (2) and adaptive area of coverage (AOC) control (cost factor = 2).
(4) Application requires (2), but transmitters must be installed in private vehicles (cost factor = 3).
(5) Application requires (3) (4), and vehicle probes (data network software) (cost factor = 4).

The effectiveness factor was determined using the combined results of the task B report (application analysis) and the IVSAWS Concept Workshop. The most significant task B application was given eight points, the least significant was given one point, Task B points were then summed with points awarded based upon the expected benefit of IVSAWS application in the rural and urban driving environments (see IVSAWS Concept Workshop report). A "low" expected benefit was awarded one point; a "moderate" expected benefit was awarded two points; and a "high" expected benefit was awarded three points. Thus, a maximum of six "workshop" points could be achieved. The effectiveness factors are therefore skewed towards the task B results (1.33:1 weight relative to workshop results). This was deemed appropriate since the task

B results were derived, in part, from statistical information (data bases), whereas the workshop results were based solely on panel discussions.

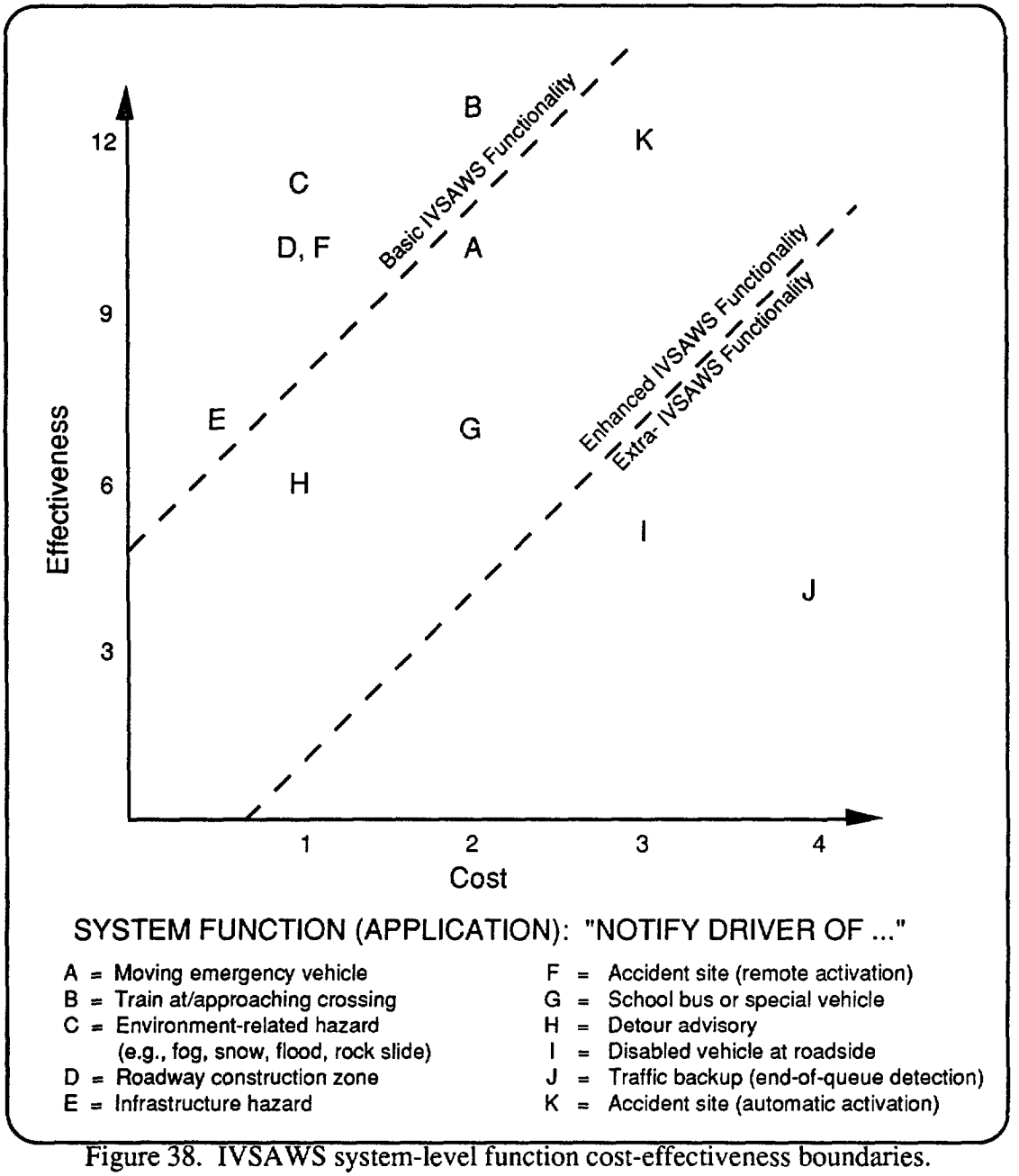

Figure 38. IVSAWS system-level function cost-effectiveness boundaries.

IVSAWS FUNCTIONALITY

This subsection defines the IVSAWS subsystem-level functions required to support IVSAWS applications A through H (see figure 38). The functions are a product of the QFD tables and requirements model developed in support of this Functional Definition subtask. For definitions

of the functional inputs and outputs, and to understand how the functions interact, refer to the IVSAWS appendixes.

Secure FCC or NTIA Frequency Allocation

This function is transparent to normal system operation. However, frequency allocation is the number one IVSAWS system design issue. Without a frequency allocation, there will be no IVSAWS. Based upon a preliminary search for frequency bands in which an allocation is most probable, it is highly recommended that the FHWA should pursue at least one of the 220-MHz to 222-MHz band channels that are reserved for Government use on a nationwide basis.

Define Area of Coverage (AOC)

Requirement: AOC definition has sufficient precision to limit alert dissemination to one of two parallel roads spaced 30 m apart (edge-to-edge). AOC definition has sufficient precision to limit alert dissemination to one of two roads intersecting at angles ranging from 30° to 90°.

Inputs (AOC, Data_Quality, one_Type, Refined_Zone_Location, Standards)

Process; This function conditions a description of the desired area of warning zone coverage into a format that is universally understood by the invehicle processes that receive and decode IVSAWS alerts, as defined by IVSAWS standards. IVSAWS deployment personnel (IDP) may provide an AOC in standard format (e.g., a set of coordinates) in which case no conditioning will be required. Data-Quality will then be STANDARD. Conversely, the AOC may be in a noncompatible format (Data-Quality is NONSTANDARD) such as the name of a highway to be covered by a warning zone. In this case, the conditioning process will need to be applied. If Data-Quality is NONSTANDARD, a description of the hazard or advisory situation (Zone-Type) may be required to appropriately condition the AOC.

Outputs (AOC_Coordinates, AOC Shape): Format of (AOC_Coordinates depends upon the eventual implementation of the functional requirements. AOC_Shape may be used to reduce the number of (AOC_Coordinates needed to define the area of warning zone coverage.

Notes; Based upon the QFD study, "Define AOC" is the most important IVSAWS function. It has the largest impact on product reliability. It is more strongly correlated with customer demands and IVSAWS quality characteristics than any other function. The subsystem that implements this function therefore deserves a significant portion (35 percent, based upon QFD) of the total funds allocated for IVSAWS infrastructure expenditures).

Refine Zone Location

Requirement; Root Mean Square (RMS) error of Refined_ Zone_Location shall be less than 30 m (relative to actual position of hazard or advisory location).

Inputs (Zone_Location, Data_Quality, Standards)

Process: This function conditions a description of the hazard or advisory location into a format which is universally understood by the invehicle processes which receive and decode IVSAWS alerts, as defined by IVSAWS standards. IVSAWS deployment personnel (IDP) may provide a Zone-Location in standard format (e.g., a set of coordinates) in which case no conditioning will be required. Data-Quality will then be STANDARD. Conversely, the AOC may be in a

noncompatible format (Data-Quality is NONSTANDARD) such as a highway designator (e.g. Interstate 40) and mile marker number. In this case, the conditioning process will be applied.

Outputs (Refined_Zone_Location): The format of Refined_Zone_Location is dependent upon the eventual implementation of the functional requirements.

Tailor IVSAWS Message

Requirement; Generate outputs in accordance with IVSAWS standards.

Inputs (Data-Quality, IDP_Community_ Segment, IDP_Zone_ID, IVSAWS_Message, Standards, System-Time, Zone-Type)

Process: Primarily, this function conditions a description of the hazard or advisory situation into a format that is compatible with the IVSAWS message structure, as defined by the IVSAWS standards. The message structure will likely be in the form of a message designator followed by a short free-text field. The message designator could be used as a pointer to a "canned" message or icon that drivers quickly learn to correlate with a specific class of roadway hazard or advisory condition (see task E report). The free-text field could supplement this data with site-specific information. IVSAWS deployment personnel (IDP) may provide an IVSAWS_Message in standard format, in which case no conditioning will be required. Data-Quality will then be STANDARD. Conversely, the IVSAWS_Message may be in a non-compatible format (Data-Quality is NONSTANDARD), such as a lengthy description of the types and number of vehicles involved in an accident. In this case, the conditioning process will be applied.

Outputs (Alert_Expiration_Time, Alert_ID, Alert_Priority, Alert_Status, Alert_Type, Standardized_Zone_Type, Tailored_IVSAWS_ Message, Zone_ID)

Generate Alert

Requirement: Provide warning and advisory zone coverage to all major and secondary roads in the United States.

Inputs (AOC_Coordinates, Alert_Expiration_Time, Alert_ID, Alert_List, Alert_Priority, Alert_Status, Alert_Type, Refined_ Zone_Location, Standardized_Zone_Type, System_Time, Tailored_IVSAWS_Message, Zone_ID)

Process: This is the "transmit" function. This function compiles the inputs into a set of alerts that are repeatedly disseminated to IVSAWS-equipped vehicles.

Outputs (Alert, Alert_List)

Alert Driver

Requirement: When an IVSAWS-equipped vehicle penetrates an IVSAWS zone (as defined by AOC_Coordinates and AOC_Shape), the probability of alerting drivers when the vehicle is at the Driver_Alert_Distance($\pm$ 1 s) shall be 0.99, whether or not invehicle processes correctly receive and decode the corresponding alert. For the purpose of requirement verification, an alert may consist of a flashing light, signal on a test line, or other discrete and measurable event.

The false alarm rate shall be less than or equal to one per month. False alarms include the following: (1) alerting a driver when the vehicle is outside the area of intended coverage (as defined by AOC_Coordinates and AOC_Shape), (2) alerts generated due to noise being

interpreted as a valid alert, and (3) alerting a driver when the warning or advisory has been suppressed by driver command.

Inputs (Alert, Vehicle_Type, DAWS_Status, Alert_Array)

Process: This is the "receive" function. This function compiles received alerts into an array and presents alerts to the driver at the proper vehicle-hazard separation (Driver Alert Distance).

Outputs (Driver_Alert)

Note: Based upon the results of task E, the optimum alert is comprised of the simultaneous presentation of an audio tone and hazard/advisory pictogram, followed by a short voice message and generation of a video text message describing the situation. Based upon the IVSAWS market survey, drivers would also like to know the distance to the hazard and see a map with the vehicle and hazard locations displayed. This functionality is beyond the $450 "not-to-exceed" price threshold desired by drivers if IVSAWS is sold as a stand-alone system. However, this functionality can be integrated into a driver-car interface that supports other driver information, safety, navigation, and control systems, thereby amortizing the interface cost over a larger set of desired features and systems.

Process Driver Commands

Requirement: Process driver commands as specified in the IVSAWS standards.

Inputs (Driver_Commands, DAWS_Status, Alert_Array)

Outputs (DAWS_Status, Alert_Array)

Process: This function tailors the presentation of alerts to drivers, based upon driver input. A driver may repeat and filter alerts by exercising this function. The commands available to drivers are dependent upon the implementation of the Driver Alert Warning Subsystem (DAWS), which is beyond the scope of this IVSAWS contract. At a minimum, five driver commands should be supported: Repeat, Mode, Select, Next, and Previous.

Maintain Standards

Requirement: Periodically update IVSAWS standards based upon feedback from drivers and IVSAWS deployment personnel.

Inputs (standards, feedback from drivers and IVSAWS deployment personnel)

Process: This is a system maintenance function. The FHWA will need to periodically revise IVSAWS standards in order to meet customer (drivers and deployment personnel) demands.

Outputs: Standards

CHAPTER 9. SYSTEM ARCHITECTURE ANALYSIS

INTRODUCTION

The system architecture analysis task examined the existing communication and geolocation systems to evaluate which of these available systems could satisfy the IVSAWS functional requirements. The deployment community interviews determined that the IVSAWS operational concept should be centralized alert broadcasts from a regional operations center for the majority of the alert scenarios. Mobile emergency vehicles traversing traffic, such as police or ambulances, should probably still function as independently operated warning nodes within this centralized architecture. The market-potential assessment determined that providing only relevant alerts is fundamental to motorist acceptance of IVSAWS. By applying quantitative system engineering methodologies, a geolocation capability was identified as the primary mechanism to provide precise area of coverage for each alert and, hence, the primary means to prevent irrelevant alerts. Thus, the IVSAWS system architecture must provide for centralized communications, occasionally distributed mobile broadcasts, and precise position location determination.

The existing communication architectures and systems are numerous. These architectures can be categorized as local area broadcast systems, wide area broadcast systems, backbone systems, and point-to-point systems. On the other hand, the existing geolocation systems are relatively few. These existing communication and geolocation systems vary considerably in complexity and cost. Each of these communication and geolocation architectures was examined for compatibility with the IVSAWS requirements. After careful consideration, two combined communication and geolocation architectures emerged as viable candidates for the IVSAWS solution.

COMMUNICATION ARCHITECTURES

The numerous existing communication architectures were identified and grouped into four categories. These four categories are local area broadcast, wide area broadcast, backbone, and point-to-point.

First, the three local area broadcast systems considered were: (1) Highway Advisory Radio (HAR), (2) Low-Power Highway Advisory Radio (LPHAR), and (3) Automatic Highway Advisory Radio (AHAR). Second, the five wide area broadcast systems considered were: (1) Radio Broadcast Data System (RBDS), (2) Subsidiary Communication Authorization, (3) Secondary Audio Programming (SAP), (4) Television Network (T-net), and (5) a nationally reserved 220-MHz to 220 -MHz band broadcast. Third, the three backbone systems considered were: (1) trunked radio, (2) shared-channel radio, (3) and microwave. Fourth and finally, the four point-to-point systems considered were: (1) cellular telephone, (2) the iridium satellite network, (3) impulse radio, and (4) packet data networks.

Each of these communication architecture candidates was examined for its frequency allocation, data rate, area of coverage, infrastructure status, costs, system interfaces, user-defined formats, and error recovery procedures. A brief description of each communication system is provided, followed by its relative advantages and disadvantages as an IVSAWS solution. Later, this information is combined with the geolocation architecture candidates to downselect to two viable architecture candidates with combined communication and geolocation capabilities.

Local Broadcast

Local broadcast technology provides broadcasting of IVSAWS information directly from a remote site, or possibly from the moving emergency vehicle. The three choices are Highway Advisory Radio, Low-Power Highway Advisory Radio, and Automatic Highway Advisory Radio. The standard Highway Advisory Radio (HAR) has the advantage that the system is inexpensive, and most drivers have an AM receiver in their vehicle so there will be less cost incurred by the driver for the IVSAWS technology. Low-power HAR provides an added benefit in that no frequency licensing or leasing fees are required. However, the standard HAR and LPHAR both have a major disadvantage in that they are limited to voice transmissions only. The Automatic HAR (AHAR) can transmit limited digital data to the vehicle, but that vehicle would have to be equipped with a new RF receiver.

HAR/LPHAR

System Description

Low-power AM radio stations are regulated by the Federal Communications Commission (FCC) under part $90.242 of their Rules and Regulations. The regulations refer to a 10-W AM station, licensed to a Governmental agency, primarily providing information to motorists. The 10-W transmitters are generally referred to as Highway Advisory Radios (HAR). Their low-power counterpart (LPHAR) are regulated under FCC part § 15.113. The low power allows the user to transmit at no more than 100 mW, on a non-interfering basis, without obtaining an FCC license. Licensing is required for HAR radios. A potential IVSAWS communication architecture based on HAR or LPHAR is shown in figure 39.

The HAR and LPHAR systems, which are limited to 3.5 kHz of bandwidth, are intended for audio broadcast and are not well suited to digital broadcasting. This bandwidth limitation prohibits the real-time transmission of digital data for position and direction information. Therefore, some further alerting mechanism besides HAR, such as a beacon or flashing light, will be required at the front of the warning zone to indicate that there is an alert message being transmitted. Also, when a vehicle enters a transmission zone and a message is being transmitted, the message will be received only if the motorist has actively tuned the vehicle's radio to the correct AM frequency.

Frequency

The frequency range for LPHAR transmitters is the AM frequency spectrum, from 530 to 1700 kHz in 10-kHz increments.

Data Rate

Travelers Information Station (TIS) and HAR transmitters are limited to a 3.5kHz audio frequency bandwidth. The purpose of this limitation is to prevent TIS stations from playing music and competing for listeners with commercially licensed stations.

Coverage

The range of an LPHAR is greatly affected by the output power of the transmitter. For the unlicensed LPHAR transmitters, the coverage ranges up to 0.8 km. With up to 10 W of output power, an HAR has slightly greater range than an LPHAR. For rural areas (rolling terrain), the coverage ranges from 4.8 to 8.0 km. In flat rural areas, the coverage ranges from 9.7 to 12.9 km. In mountainous and urban areas, the range may drop down to 1.6 to 3.2 km. Coverage range for each site varies.

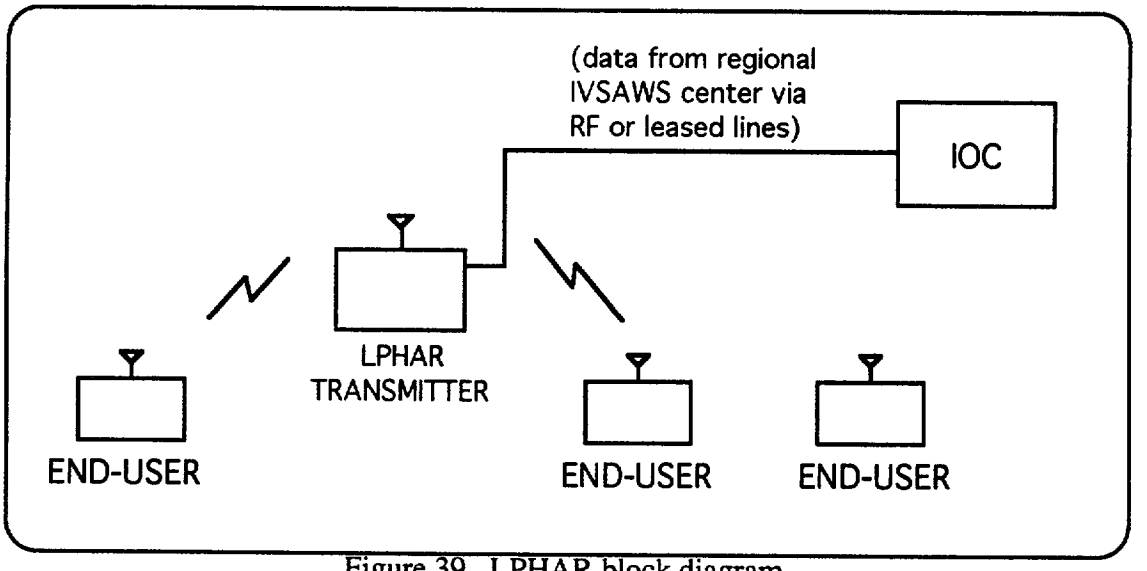

Figure 39. LPHAR block diagram.

Status

HAR and LPHAR are established technology, utilizing standard AM transmissions. The limitations come in the transmission range. LPHAR technology is one-way and best suited for voice transmissions from a fixed roadside site to passing vehicles. For mobile use, the limited transmission power translates to a limited alert coverage area, thus focusing the alert area. However, the transmissions will not have enough bandwidth to provide directional information in order to differentiate between intended recipients within the transmission range. The quality of the ground plane established within the vehicle for the antenna will also impact the quality of transmissions from mobile emergency vehicles.

Costs

Costs will be incurred primarily by the IVSAWS application system providers. Since the end-user only needs an AM receiver within the vehicle, and most vehicles have an AM receiver within the vehicle, it is considered a non-cost incurred item. The transmitter costs range from roughly $850 for the basic LPHAR field transmitter and antenna, to $2k to $5k for the HAR field transmitter with antenna (note: some HAR companies include the price of putting together the license application package as part of the HAR costs). There will also be costs incurred for the beacon/flashing sign and the means of getting the information out to the field site from the IVSAWS Operations Center (microwave, cable, leased lines, etc.), all with varying costs.

System Interfaces

The HAR radios generally come with tape recorder input ports, microphone input ports, RJ-11 jacks for remote phone connections, and headset output ports. Most radios can run off of AC or 12-VDC power sources.

AHAR

System Description

Automatic Highway Advisory Radio is a mobile communication technology that utilizes a licensed radio frequency from any number of transmitter types (e.g., narrowband radio, trunk radio, and shared-channel radios) to transmit data to a vehicle for automatic playback. A potential IVSAWS communication architecture based on AHAR is shown in figure 40.

The end-user can receive messages in one of two ways — with an enabling beacon or through tones transmitted in front of a message. For the first situation, an enabling transmitter is placed in front of the message zone, as suggested for a HAR or LPHAR configuration. This enabling transmitter continuously sends out an encoded signal (DTMF) for the intended end-users. The end-user's vehicle is equipped with a receiver that scans until it receives an enabling code from the field transmitter. Once the vehicle receiver stops scanning, it waits for the message. The message is received after the vehicle enters the message receiver zone. The width of the zone has been suggested to be approximately 2.4 km (distance required for a vehicle driving at

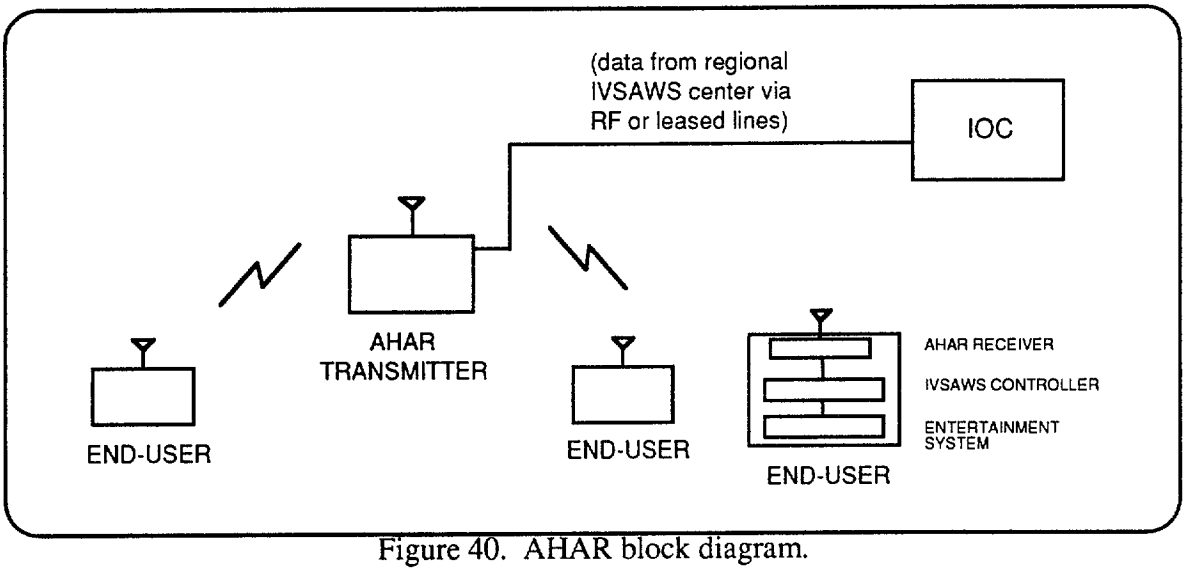

Figure 40. AHAR block diagram.

96.6 km/h to receive a 30-s message twice) to 4.8 km (distance required for a vehicle driving at 96.6 km/h to receive a 60-s message twice).

When a vehicle enters a transmission zone and a message is being transmitted, the message will automatically interrupt the radio's playback selections, i.e., the radio station or the cassette tape, and play the message to the motorist.

It should be noted that the automatic intelligence comes from the IVSAWS warning unit. The intelligence is the filtering, passing through to the end-user, and storing of messages received.

Frequency

Since AHAR is a concept of automatically providing information to the driver, rather than an RF technology, "AHAR" does not have a specifically assigned, nationwide frequency. As mentioned in the system description, the RF backbone can be selected from any number of

transmitter types. In the past, land/mobile radio frequencies have been utilized (29.7 to 50 MHz, 66 to 88 MHz, 150 to 174 MHz, 403 to 512 MHz, 806 to 870 MHz, and the 900-MHz series).

Data Rate

The data rates vary depending on the RF technology selected. If audio is to be transmitted from the AHAR transmitters to the end-user, then up to 7.5 kHz is acceptable. If tones are sent, representing data, then the maximum data rate would be 9600 bps.

Coverage

A particular message zone is best limited to the 2.4- to 4.8-km range, depending upon the estimated message length (30 to 60 s). The data will need to be transported from the IVSAWS Operations Center (IOC) to remote sites, either via leased lines or other addressable RF technology (spread spectrum, trunking radios, cellular, etc.).

Status

AHAR technology is one-way and best suited for voice transmissions from a field site alongside the roadway to be received by passing vehicles. The technology could also apply to mobile-to-mobile applications, with the transmitting vehicle sending out the enabling signal in the header of the message.

Costs

Costs will vary depending on the RF system chosen and will be incurred by both the deployment community and motorists. End-users would have to purchase the receiver and an adapter (between the radio and the IVSAWS unit). Prices for the radios range from $500 to $1000. Adapters should sell for no more than $75. The IVSAWS provider will have to purchase the field transmitters (radio, antenna, repeater package, and power supply), ranging from $1000 to $3000 per site, as well as any equipment required at the central operating point (costs will vary depending on system setup).

System Interfaces

The system interfaces will be dictated by the type of receiver selected. An output connection that will allow the baseband audio to be sent to the IVSAWS warning unit, such as an RCA jack or a standard phone jack (RJ-11), would be appropriate.

Commercial Subcarriers

Two types of wide area broadcast systems are available — commercial subcarrier and (non-commercial) centralized broadcasts. The three choices for commercial subcarriers are Radio Broadcast Data System (RBDS), Subsidiary Commercial Authorization (SCA), and Secondary Audio Programming (SAP). RBDS and SCA use FM radio subcarriers to disseminate information. SAP uses a television subcarrier to disseminate information.

These commercial subcarriers offer many advantages to IVSAWS. In particular, the technology is currently available, the technology is mature, vast coverage areas with up to 64.4 km radius can be attained, no separate license is required, no additional regulations are required, existing radio and television stations are used, the stations are available across the country, and the signal transmissions are generally reliable.

RBDS

System Description

The Radio Broadcast Data System (RBDS) transmits digital data in conjunction with a standard FM radio signal. A potential IVSAWS communication architecture based on RBDS is shown in figure 41. Information is sent from the IOC to the FM radio station, which, in turn, digitally encodes the data and transmits it out on the subcarrier frequency. This transmission is technically robust due to its narrow bandwidth signal. RBDS is designed to transmit text data to the end-user. RBDS standards have defined message groups based on message length and content. For example, group 2A is dedicated to radio text for message lengths up to 64 characters and group 2B is dedicated to radio text with a message length up to 32 characters. The textual data received by the end-user can be easily converted to synthetic speech.

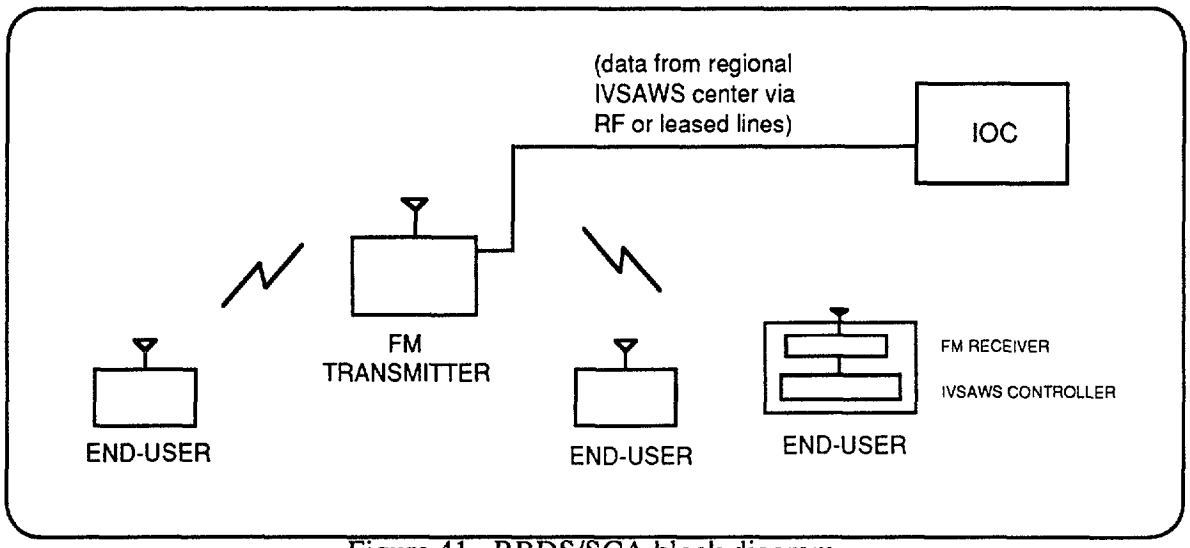

Figure 41. RBDS/SCA block diagram.

RBDS is best suited for transmitting limited text data to the motorist from an IOC or remote field site. Transmission rates up to 1200 bps are possible, however, only a few bits (less than 100) are available for discretionary use.

Since RBDS transmits over the entire reception area of its host FM stations, more localized alert areas can be specified by combining RBDS with acceptance codes. These acceptance codes would act as filters to make sure that the audio from the SCA transmission is only being forwarded to the driver in some zone, thus localizing the broadcasts. The channel 2 selection is used to provide data for the filtering of possible SCA information being transmitted. Group 5 provides transparent data channels, allowing messages of any length and format to be sent. RBDS receivers continuously scan for group 5 messages, even when the end-user is tuned to a non- RBDS station. Hence, when there is an emergency traffic update, the message information can still be received and automatically provided to the end-user.

RBDS can also be used to provide Differential Global Positioning System information to the end-user via the group 3A portion of the transmission. This is an alternative method to acceptance codes for defining alert zones with specific coverage.

RBDS can be used as a stand-alone system or as a provider of information to the invehicle controlling unit. This controlling unit would be responsible for determining if an alert's area of coverage applies to the vehicle's location and thus warrants presenting the alert to the driver.

Frequency

Since RBDS operates in conjunction with FM radio broadcasts, the corresponding frequency band in the United States is 87.5 MHz to 108.0 MHz. During FM stereo broadcasts, the subcarrier frequency is locked to the third harmonic of the 19-kHz pilot tone, with a tolerance of + 6 Hz. During monophonic broadcasts, the frequency of the subcarrier is 57 kHz with a tolerance off 6 Hz.

Data Rates

The data rate is based on the basic clock frequency that is obtained by dividing the transmitted subcarrier frequency by 48. Consequently, the basic data rate of the system is 1187.5 bps + 0.125 bps. The baseband coding (data link layer) is structured as follows:

- Largest element in the structure is called a group (104 bits each).
- Each information word is comprised of 16 bits.
- Each checkword is comprised of 10 bits used for error protection.
- Data transmission is fully synchronous with no gaps between groups or blocks.

Coverage

RBDS area of coverage is defined by the transmission range of the host FM station.

Status

The main advantage of RBDS is that it is a standard. The automobile and radio industry is currently manufacturing units that should be available by the second quarter of 1993. RBDS is best suited for transmitting limited text data to the motorist or message information from the IOC to a remote field site.

An RBDS approach has several organizational issues that must be resolved. FM stations must be willing to sell the sideband time. Currently, stations are reluctant to transmit the data for fear of interrupting their station's entertainment, even though the channel is transparent to their operations. Also, sideband usage costs are not regulated, so each radio station will have their own individually negotiated contract. Finally, since RBDS sideband transmission is a potential source of profit for the radio station, there could be much competition for this limited resource.

Cost

Depending on the consumer response, an RBDS/AM/FM radio receiver, for the end-user, could cost as little as $50 above current AM/FM receivers. Costs incurred by the IOC will include a modem at the IOC ($200 to $500), a phone line to the station (varies per location and type of phone line), a modem at the station, RBDS encoder (around $6000), and the cost of the sideband usage from the station (variable).

System Interfaces

RBDS receivers could be equipped with RS-232 ports to communicate to the invehicle controlling unit. The receivers should also be equipped with an auxiliary port to allow external audio to be piped through (such as using SCA in tandem with the RBDS message).

SCA/SCS

System Description

The Subsidiary Communications Authorization (SCA), also known as Subsidiary Communications Service (SCS), is an FM broadcast technology that utilizes the 67-kHz or 92-kHz subcarrier frequency to transmit data. Additional licensing is not required because the subcarriers are considered a subsidiary service of the existing broadcast licensee. The FM subcarrier is a one-way data transmission with an audio quality similar to that of an AM broadcast station. A potential IVSAWS communication architecture based on SCA has the same basic architecture as the RBDS shown in figure 41.

To provide information (digital or audio) to the end-user, the IOC transmits the information via leased telephone lines to the FM station, which has authorized usage of their sideband. At the FM station, an SCA encoder modulates the information from the IOC onto the carrier frequency. Any end-user who has an SCA receiver and is within the range of the FM station's transmission will be able to receive the information.

SCA can be used in tandem with RBDS transmissions that provide a digital header for the audio data (see discussion on RBDS). The header would provide digital information such as location codes. SCA can also be used to transmit digital data, thus eliminating a need for another service to transmit such information. However, messages to the end-user would be either in compressed voice or in text format for use in the generation of synthesized voice.

Frequency

There are two FM subcarrier frequencies in common use, 67 and 92 kHz above the main FM channel. An FM subcarrier, restricting the maximum modulating frequency to 5 kHz, has a composite bandwidth of up to 20 kHz.

Data Rates

If using indirect data modulation, the common form is audio frequency shift keying (AFSK). The frequency of the audio tone is varied, which, in turn, modulates the subcarrier. AFSK (the same technology that the dial telephone network used) generates the tones cheaply and it is easy to handle, but the maximum data rate possible is approximately 1200 bps. Direct modulation varies the frequency of the subcarrier so data rates up to 4800 bps are readily attainable. Some current industry estimates claim (unrealistically) that data rates up to 19.2 kbps can be achieved if they are allowed to utilize the whole FM subcarrier spectrum. With changes in the FCC rules and different modulation techniques, the 19.2 kbps may be possible. However, radio stations are not expected to lease out their FM subcarrier capabilities to one user when they can currently lease to more than one simultaneously.

Coverage

FM subcarrier transmission range is limited to the transmission range of the FM station's signal. Experience shows that as the required bandwidth of a data FM subcarrier channel increases, the channel becomes less robust. If a signal includes longitudinal redundancy (redundancy across its frequency spectrum in a period shorter than the interval of one transmitted bit), then it is more robust for a wider bandwidth.

Status

The FM subcarrier technology is a mature technology and is a very cost-effective way to disseminate information over a wide area. Services such as MUZAK(R), for example, have utilized the broadcast subcarrier technology for years. Problems with multipath and crosstalk can be avoided by the careful selection of encoder and decoder used for the service. This audio FM subcanier technology has been around for several decades. On the other hand, digital FM subcarrier modulation is still in the developmental stages. Field demonstrations in a working environment with a variety of station formats (classical, rock, etc.) is strongly recommend as part of any assessment of digital FM subcarrier technology. It should be noted that FM stations sell their sidebands for profit and the cost for the service will vary from market to market.

Cost

There are several costs that will be incurred by the IOC:

• Audio.	
- Encoder (at FM station)	**~ $4000**
• Digital.	
- Encoder (at FM station)	**≥ $4000**
- Modem-IOC and FM station	**$200 ↔ $500**
• Both audio and digital.	
- Leased phone line from IOC to FM station	varies
- FM station sideband leasing	varies
• Costs incurred by the end-user receiver.	**$500 ↔ $1300**

System Interfaces

- Logical interface.
  - Audio (analog voice)
  - Digital (RS232/422)
- Physical connections.
  - Audio (BNC-type connectors)
  - Digital (9- or 25-pin connectors)

Secondary Audio Programming

System Description

Secondary Audio Programming (SAP) is a TV broadcast subcarrier offering either 46-kHz (stations that transmit in stereo) or 100-kHz (stations that do not transmit in stereo) bandwidths. The SAP is a one-way data transmission and is excellent for analog sound.

A potential IVSAWS communication architecture based on SAP is shown in figure 42. Traffic and incident information can be generated at the IOC, sent to the TV station via leased lines, and modulated onto the TV transmission. End-users within the transmission range and with a SAP decoder can then receive the information,

SAP can be used in tandem with RBDS transmissions that provide a digital header for the audio data (see discussion on RBDS). The header would provide digital information such as location codes. As an alternative, digitized data in the form of “tones” can be included in the audio messages to convey information such as message type or alert zone coordinates. A tone

generator at the IOC would have a tone generator and each vehicle would have a tone decoder as part of its IVSAWS warning unit. These items are standard Hayes-compatible modems.

Frequency

TV stations broadcast the subcarriers on their aural carriers using either 46-kHz (stations that transmit in stereo) or 100-kHz (stations that do not transmit in stereo) bandwidths.

Data Rates

Data rates can vary up to 19,200 bps, depending on the data circuits used and the amount of bandwidth available for the SAP (monorail stations provide more bandwidth). TV stations use much less audio signal processing than most FM stations.

Coverage

SAP transmission range is limited to the transmission range of the TV station's signal. TV stations generally have greater antenna heights, better transmitter locations, and more radiated power than FM stations.

Status

This SAP resource is readily available for IVSAWS because currently only a few commercial TV stations use their SAP for any revenue-related activity. Furthermore, TV stations are not "packed-in" to permit the most number of stations in the same geographical area, resulting in less overall interference. Also, no portion of the signal power is taken away in order to provide frequency for the subcarrier, thus providing for a stronger, more consistent signal in the sideband.

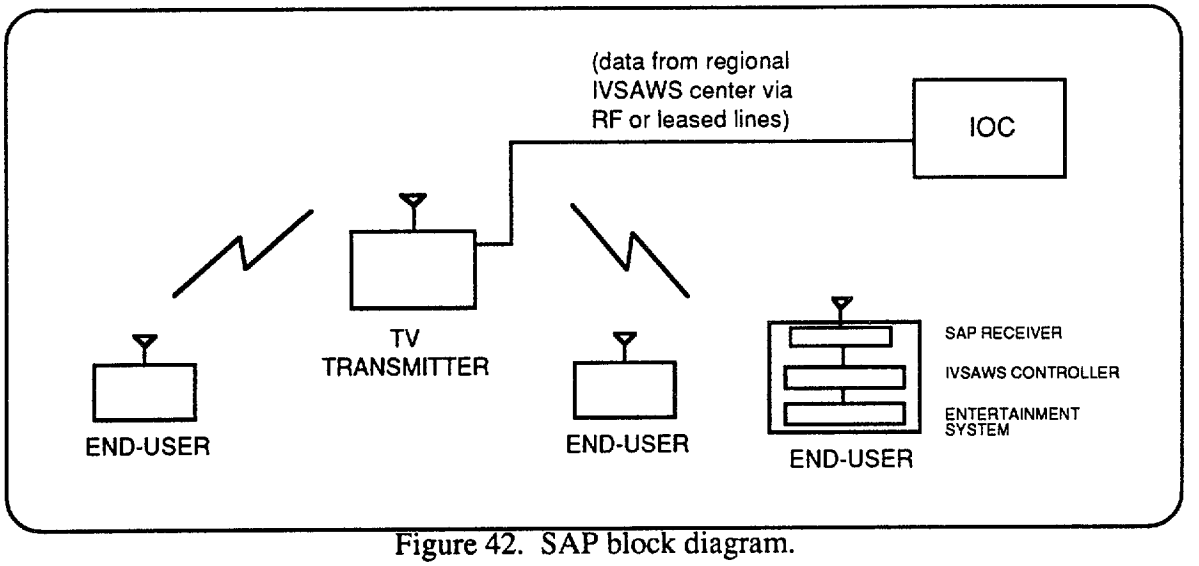

Figure 42. SAP block diagram.

Cost

There are several costs that will be incurred by the IOC:

• Encoder (at TV station).	~$4500
• Leased phone line from IOC to TV station.	varies
• TV station sideband leasing.	varies
• Costs incurred by the end-user receiver.	**~$200+**

System Interfaces

- Logical Interface.
  - Analog voice; there may be an AFSK used for the header information to the IVSAWS warning unit (which will require a tone decoder).
- Physical Connection.
  - The physical connection expected for the SAP receivers are of the BNC type.

Centralized Broadcasts

As before, two types of wide area broadcast systems are available - commercial subcarrier and (non-commercial) centralized broadcasts. The centralized broadcast architectures transmit from a centralized location as in commercial subcarriers, but these centralized broadcasts are not dependent upon a subcarrier of an existing station's frequency assignment. The two choices are television network (T-net) and a newly available, nationwide 220-MHz to 222-MHz frequency band.

T-NET

System Description

T-net is a new wireless communication technology targeted for frequency bands below 900 MHz. This system provides bi-directional digital or analog (voice) information transmission. A potential IVSAWS communication architecture based on T-net is shown in figure 43.

The T-net system employs previously unusable broadcast frequencies in a manner that will not cause interference to broadcasters. An unassigned channel adjacent to a broadcasting TV channel is used for transmission, but only during the horizontal blanking interval (HBI) and vertical blanking interval (VBI) of that TV channel. This signal appears as a "pseudo-sideband" on the host TV signal. Therefore, no interference is caused.

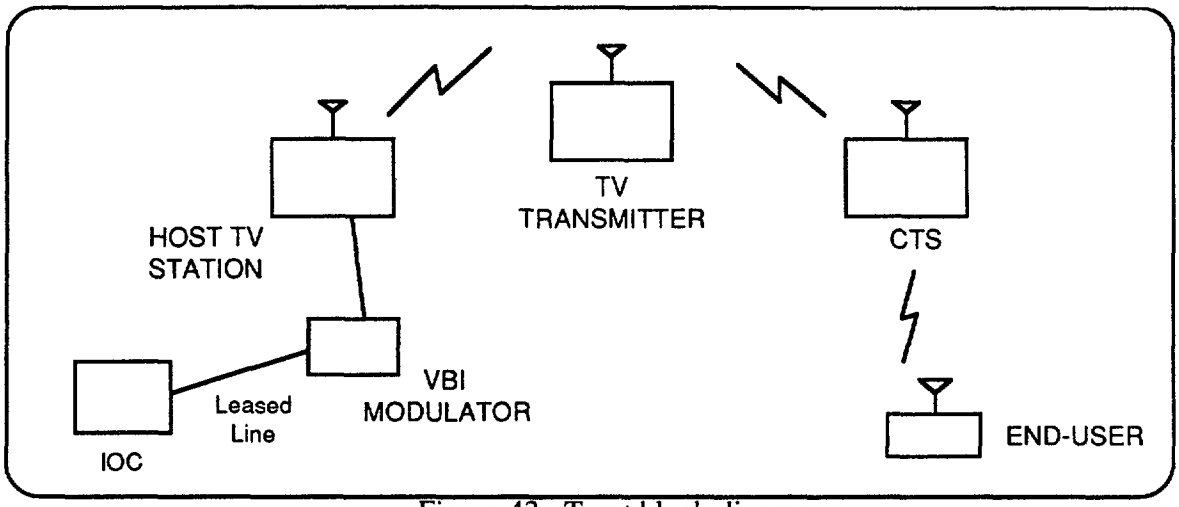

Figure 43. T-net block diagram.

Compatibility with nearby data links is achieved by sending short, precisely timed pulses (roughly 5 μs) of data, much like radar. In the centralized system, a concentric grid is established by means of pulsed transmissions (range gates) and shaped antennas. The pulses are synchronized in the down link with the HBI of the colocated, cooperative TV transmitter. The small remote stations respond as they are addressed. Thus, the distance to each subscriber may be accurately determined by measuring the transit time of these transmissions. The service area, partitioned into angular sectors, is used to identify the bearing to each end-user. The system is compatible with cable or satellite down-link delivery systems. The vehicle will need a transponder.

Frequency

The technology can be used for all types of data transmissions throughout the radio spectrum. The target market is the interactive video and data services (IVDS). The FCC is currently planning to award two (218-MHz to 219-MHz band) licenses for IVDS applications in each of the identified 734 cellular markets by lottery.

Data Rate

The system is capable of providing up to 75,000 simultaneous bi-directional transmission links on one TV channel; data rates to and from each subscriber may range from a low of 10 bps to a high of 16 kbps.

Coverage

The service area of the T-net system is defined by the power of the transmitting equipment at the control broadcast site. Typical radius is 32 to 48 km. The coverage area is also partitioned into angular sectors that are generally 15° wide in the UHF band.

The overall size of the coverage area will result in a variety of radio frequency propagation effects, including station blockage, foliage attenuation, manmade interference, reflection, and noise. Ground-based network users will encounter the most difficult propagation environment. Radio paths over several miles long may suffer from fading, and the longer the path, the more a transmission is prone to fading. Fading is usually caused by atmospheric changes and ground

and water reflections in the propagation path. This technology is also susceptible to multipath propagation losses.

Status

Radio Telecom and Technology, Inc. has been developing T-net for several years and has tested T-net under FCC experimental licenses in Los Angeles and Salt Lake City.

Cost

The estimated system costs are $150,000 to $200,000 for the central station and $125 for the end-user. The cost of the end-user unit does not include the cost of the modem adapter card required for the system interface.

System Interfaces

The end-user unit can be equipped with an RS-232 interface port. Software would have to be written to provide for the broadcast mode in lieu of the standard point-to-point handshaking common with RS-232 protocols. The end-user unit provides a DB-9 connector for the RS-232 interface.

IVSAWS Exclusive

Sys tern Description

A frequency allocation is vital to the success of IVSAWS deployment. In this system approach, the operational frequency band below 500 MHz is obtained first. The system design is then the process of designing a communication architecture within the constraints of the bandwidth that fulfills the IVSAWS functionality. The data rate, area of coverage, and system cost are based on the resultant system design. The details of this design and performance analysis are presented elsewhere in this report.

Based on the market surveys with motorists and the deployment community, a centralized broadcast of IVSAWS alerts with a well-defined area of coverage is the preferred operational architecture. Since this channel would be for the exdusive use of IVSAWS, bi-directional communication can be designed into the communication architecture. Hence, this approach can make provisions for alerts from mobile emergency vehicles, such as police, rescue, and ambulances. Such a system is illustrated in figure 45.

Frequency

A detailed search by Telecommunications Consulting and Mitre has shown that few frequency bands are available on a nationwide basis without the substation cost of relocating the existing users to some other frequency band. The one exception to date is the 220-MHz to 222-MHz band that is already in the process of reallocation. The current bandwidth and power restrictions are shown in figure 44.

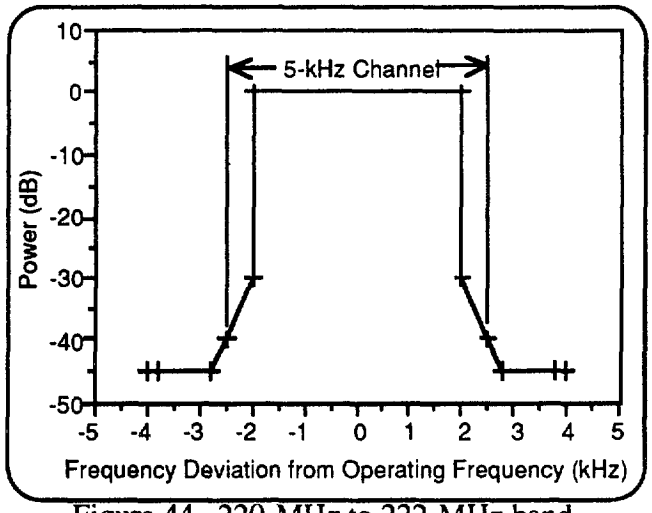

Figure 44. 220-MHz to 222-MHz band.

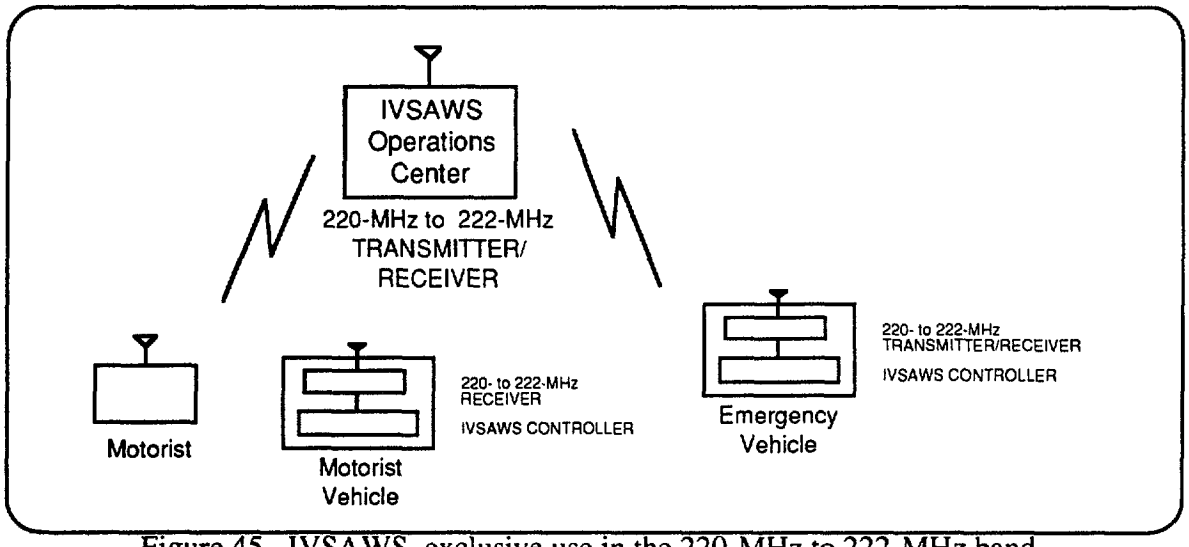

Figure 45. IVSAWS exclusive use in the 220-MHz to 222-MHz band.

Status

The 220-MHz to 222-MHz band was originally a Government radar band. In addition, radio amateurs licensed by the Federal Communications Commission (FCC) were allowed to use this band on a secondary basis. As part of the agreement that transferred this 2-MHz band from the National Telecommunications and Information Administration (NTIA) to the FCC, certain channel pairs would be reserved for the Federal Government. In particular, 10 pairs of 5-kHz channels were reserved for nationwide Government users (see 47 C.F.R. §90.175).

Point-to-Point

Point-to-point communication architectures are good for data and voice transmissions between the IOC and the IDP. Point-to-point communications consist of Cellular, Iridium, Impulse Radio, and Packet Data Wide Area Network Services. The architecture would also be useful in transmitting messages from the IOC to a remote site. The technology is established, but

unfortunately there are recurring costs and many users are taking advantage of the systems making for saturated markets in many urban areas.

Cellular Radio

Sys tern Description

Cellular radio is a technique for frequency reuse in a large radio communications system. It is mainly known by what is its largest implementation by far, the mobile telephone network. It gets its name from the fact that an area is divided into cells that are 3 to 32 km in diameter. In the center of each cell, a control radio handles the network management functions, including the assignment of frequency sub-channels. A radio requests a frequency over a control channel and one is assigned by the control radio. The cellular layout allows frequencies to be reused in non-adjacent cells (see figure 46).

A second generation of cellular systems is in development and is characterized by digital transmissions and enhanced network control. The new digital cellular system will provide greater bandwidth and frequency-reuse capability. Digital cellular systems, in some areas, are planed to be in place by 1996. Cellular radio provides a reliable, low-cost solution in those situations where a low-rate data or voice-grade communications link is required on a part-time or demand basis.

Systems have been demonstrated that utilize a cellular telephone in conjunction with a modem to allow communication between a traffic management center and equipment in the field. In the case of IVSAWS, the cellular phone technology could be used to "dial-up" a HAR or LPHAR to update messages. This eliminates the need for a permanent connection to the field device and allows flexibility in installing and moving these devices where needed. Cellular technology provides a good point-to-point means of getting incident information from the field (IVSAWS deployment personnel) to the IOC.

Socrates (System of Cellular Radio for Traffic Efficiency and Safety), an IVHS application in Europe, utilized the cellular radio technology. The approach was based on the use of a common downlink and a single multiple-access uplink in each cell of the cellular radio network – this way, cellular radio can provide the high-capacity duplex link without unduly loading the radio network.

Frequency

Currently, the frequency assigned for cellular service transmitters is in the range of 824.04 MHz to 848.97 MHz and the receiver frequency is from 869.04 MHz to 893.97 MHz. A cellular voice channel only requires 5 kHz of bandwidth, but a channel spacing of 30 kHz is used in order to have an acceptable noise level.

Data Rate

Cellular system bandwidth and capacity depends largely on the method of multiple accessing, the distance between relay stations, and the number of users. Analog cellular, with a relatively low capacity (4800 bps), has already reached its limits, and communications quality is suffering degradation. However, to ease this situation and boost capacity, second-generation cellular service, in the form of digital technology such as Time Division Multiple Access (TDMA), has been introduced that conforms to Electronic Industry Association Interim Standard (IS-54), which specifies a channel spacing of 30 kHz and that each digital channel shall operate at 48.6 kbps, carrying three user signals. TDMA increases cellular transmission capability by three times over analog's capacity, and Frequency Division Multiple Access (FDMA) can be used to

grow from 165 simultaneous users per cell to 330 users per cell. Therefore, both can further increase system capacity up to six times, under ideal conditions.

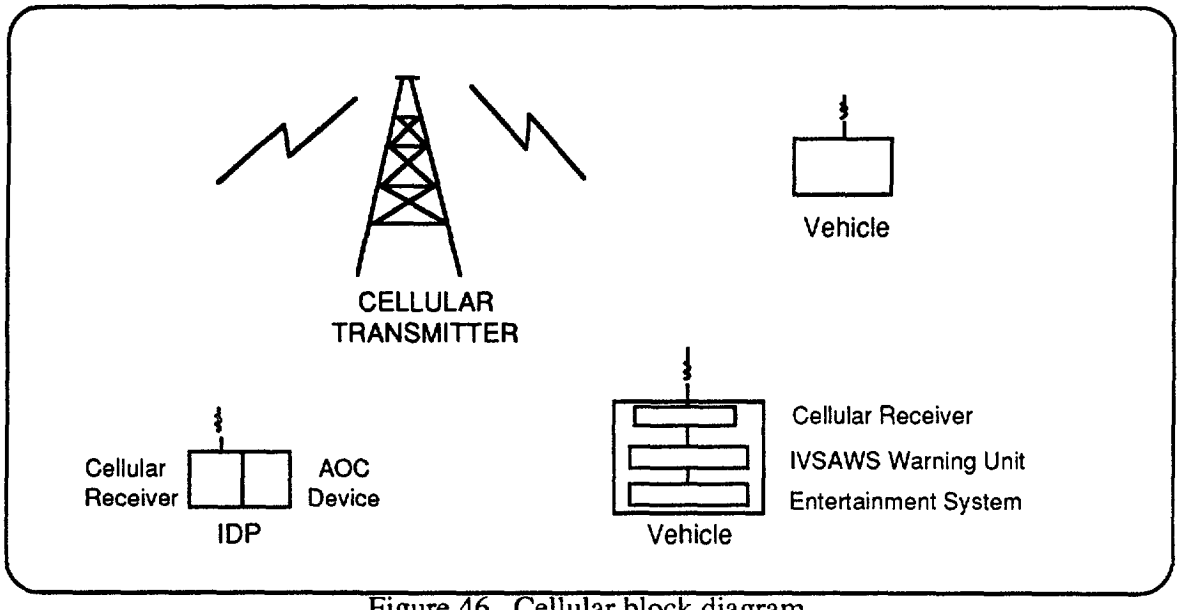

Figure 46. Cellular block diagram.

Coverage

The cells in cellular coverage are 3 to 32 km in diameter, and allow communication between the user's mobile telephone and the centrally located switching system that connects with the regular telephone network. When the caller moves from call to call, the central switch automatically moves the call to the new cell site and a new radio channel. Cellular telephone calls are automatically assigned to one of many available channels from a particular cell site. Area coverage for this technology depends on the radio frequency band used for the transmission of signals. For current frequencies in use for cellular systems, cell sites are located up to 32 km apart.

Status

Industry experts predict that by 1995, any cellular telephone user will be able to call from almost anywhere in the metropolitan areas of the United States or on any major interstate highway. With its rapid expansion, subscribers are currently signing up at the rate of more than 130,000 per month, this may mean that there may be delays before a cell is available to make any sort of call. The use of cellular telephone services in rural areas may be nonexistent if there is not a cellular service transmitter in the area.

The cellular system provides a 99.95 percent reliability rate provided that it is applied within the limits of coverage. Cellular radio links are subject to severe variations in received signal strength due to local variations in terrain, manmade structures, and foliage. Cellular links are easy to maintain because of the modularity of parts that reduces the time required to make changes or repairs. Spare and replacement parts, including new equipment, are readily available as off-the-shelf products. Cellular telephone service is available to any type of user.

Cost

Costs incurred by the IOC:

• Cellular phone. (one phone at IOC, more may be needed if phones are to be used for remote sites)	from ~$200
• Modem. (necessary if trying to send out digital information)	from ~$200
• Cellular phone service.	varies
• End-user.	
Cellular phone	from ~$200
Modem (this may be put into the IVSAWS warning unit)	from ~$200
• Cellular phone service.	varies

System Interfaces

Cellular phones may provide an interface to facsimile, modem, and a pager/message unit. The interfaces are expected to be commercial standard, coaxial, RS-232, DB-25, or RJ- 11. It should be noted that all phones are not created equal, so the connections may not be uniform.

Iridium

System Description

Iridium is expected to mark the next major milestone in global communications. The system will employ 66 low earth orbit (LEO) satellites and handheld telephone units. The satellites will communicate with user terminals and gateway stations on the ground, as well as with other satellites in the constellation. The system will provide point-to-point communications from anywhere to anywhere on Earth.

The system combines two wireless communications technologies: space communication systems and cellular telephone systems. This is accomplished using the following technologies: small satellites, phased-array antenna systems, functionally dense radiation-tolerant semiconductors, advanced baseband processing architectures, and distributed network architectures.

The iridium system is expected to be fully operational in 1997. It will support voice communications, radio determination services, facsimile, data transmission, and paging for millions of users worldwide. The iridium technology provides a good point-to-point means of getting incident information from the field (IVSAWS deployment personnel) to the IOC.

Frequency

The iridium system works in the 1.8-GHz to 2.2-GHz radio spectrum that has been licensed by the FCC for LEO satellite communications.

Data Rate

Each cell in the iridium system is capable of supporting up to 110 simultaneous bi-directional transmission links (assuming 10.5 MHz of spectrum). The system will provide digital voice at 4800 bps and digital data at 2400 bps. The data transmissions are expected to include geo-positioning, facsimile, raw, and global paging data.

Coverage

The service area of the iridium system is defined to be the entire surface of the earth and the space above it. Each cell in the constellation will service a 689-km diameter area. The iridium system will provide 110 users per cell, which represents half the number of users supported by an individual land- based cell.

Status

The consortium was formed in 1991 and is expected to provide funding through 1997. The major system milestones are listed below:

- 1994 – First seven satellites launched, system control facility operational, and four gateways operational.
- 1996 – Early iridium service available and full constellation deployed.
- 1997 – The iridium system and additional gateways are operational.

Cost

The iridium system is a lower-density, higher-priced service than is cellular telephone. The per minute cost is expected to be 3 to 10 times that of conventional cellular. The current estimated cost for the basic user unit is estimated at $3000 with an expected decrease to $1000 as volume increases due to customer demand. The estimated user cost is $50/month plus $3.00/min for outgoing calls. The estimated cost of the satellites and the ground stations has been estimated at $2.5 billion in 1991 dollars.

System Interfaces

The iridium user unit is expected to provide an interface to facsimile, modem, and a pager/message unit. The interfaces are expected to be commercial standard, such that existing equipment is capable of being interfaced to the iridium user unit.

Impulse Radio.

System Description

Pulson Communications has applied for a "Pioneers Preference" from the FCC to implement impulse radio, which is an ultra-wideband communications technology. The actual technology employed is known as pulse position modulation. The system communicates by slightly changing the timing of very short pulses instead of by using AM or FM techniques (see figure **47).**

The system uses pulse trains that are generated at intervals between 0.5 and 1.5 ns. Typically, l.O-ns and 0.5-ns pulses have center frequencies of 1 GHz and 2 GHz, respectively. The pulse train is modulated by slight differences in time from the expected output. These slight differences are called dithers.

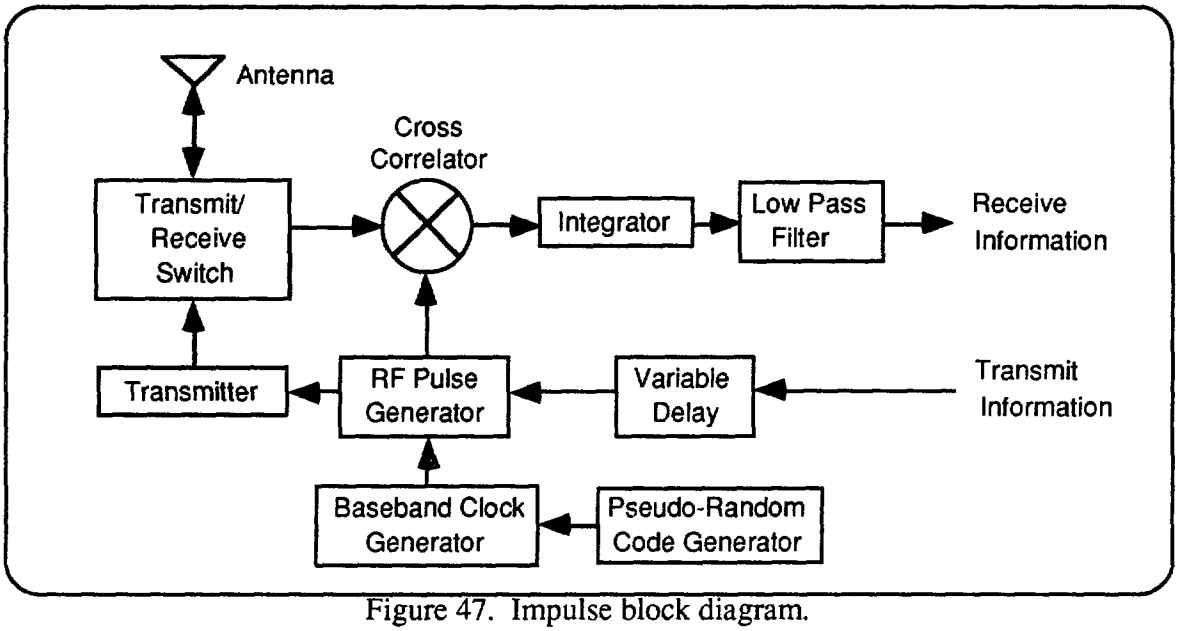

Figure 47. Impulse block diagram.

Due to the short nature of the pulse, large amounts of information can be sent in this manor. The system bandwidth is typically 100+ percent of the center frequency and it has a Gaussian distribution. Due to the bandwidth, no processing is necessary to spread the signal's energy. The bandwidth also reduces the chances of interference with other systems operating in the same vicinity.

Frequency

The impulse radio works in the 1.0-GHz to 2.0-GHz radio spectrum. Initial FCC testing has not found frequency disturbances to existing equipment.

Data Rate

Impulse radio will allow approximately 7000 duplex conversations to take place in an 8-km radius area. It is also expected that video will be accommodated at real-time video data rates. At short ranges, impulse radio is capable of providing more than a gigabit per second of communication capacity.

Coverage

Pulson Communications has applied to use impulse radio in the Personal Communications Services (PCS) market. Each user will be assigned a unique identification number similar to a telephone number. A personal number (PN) code sequence will then be used to separate user channels; using a 32-bit PN code will allow approximately 4 billion channels. The service area of the impulse system will be defined in a similar manner as are cellular phone network cells.

Status

Pulson Communications Corporation filed for a Pioneer's Preference in May 1992. The FCC has been studying the application and as of yet has not made a decision. Initial operations are expected to be in the following areas:

- District of Columbia
- New Jersey
- Pennsylvania
- Delaware
- Maryland
- Virginia
- West Virginia

This area is also serviced by a telephone operating company. This is being done to provide an alternative to the Baby Bell for mobile communications services.

Cost

The impulse radio system portable terminal is expected to be produced for under $200. The base systems are expected to be similar in cost to existing cellular base stations. The actual per minute and service charges have not been discussed. It should be considered that the technology may be used and the PCS issue could then be dropped.

System Interfaces

The impulse radio system portable terminal is not completely defined at this time. Since impulse radio is being considered as a direct competitor to cellular telephone, it can be expected to provide interfaces to all current and future cellular unit external interfaces. The interfaces are expected to be commercial standard, such that existing equipment is capable of being interfaced to the impulse radio system portable terminal.

Packet Data Wide Area Network

Sys tern Description

Packet Data Wide Area Network services are provided to mobile users to allow for a two-way transfer of data. The service areas are controlled by third-party vendors and the areas are currently limited to urban and suburban markets. Services offered by different providers tend to utilize different protocols, thus limiting the product purchased to match the service provided. Users pay a fee for the service based on the amount of data activity, that is, both senders and receivers pay -just like the cellular system. The ADVANCE system in Chicago is utilizing the Ardis mobile data network services. TravTek is utilizing the Motorola data modem for their testbed (see figure 48).

Frequency

Frequency ranges depend on the service area and the provider. System frequency is leased from the provider.

Data Rate

Data rates will vary based on the mobile modem technology utilized for a particular service. Examples of two current mobile modems are the Ericsson modem radio, which can handle up to 8 kbps, and the Motorola radio modem, which can currently handle 4800 bps with a soon-to-be-available upgrade that will handle up to 19.2 kbps.

Coverage

The range of the networks is measured in miles, however, the range is limited by the amount of transmitter coverage for the area. Currently Ardis has 1,200 transmitter sites that are connected to network control points through a leased-line network covering roughly 400 metropolitan areas. RAM mobile data has 800 base stations in operation throughout the United States; their stations are interconnected through leased-line networks to a national control center.

Status

The system is limited to urban areas and one system cannot talk to another system.

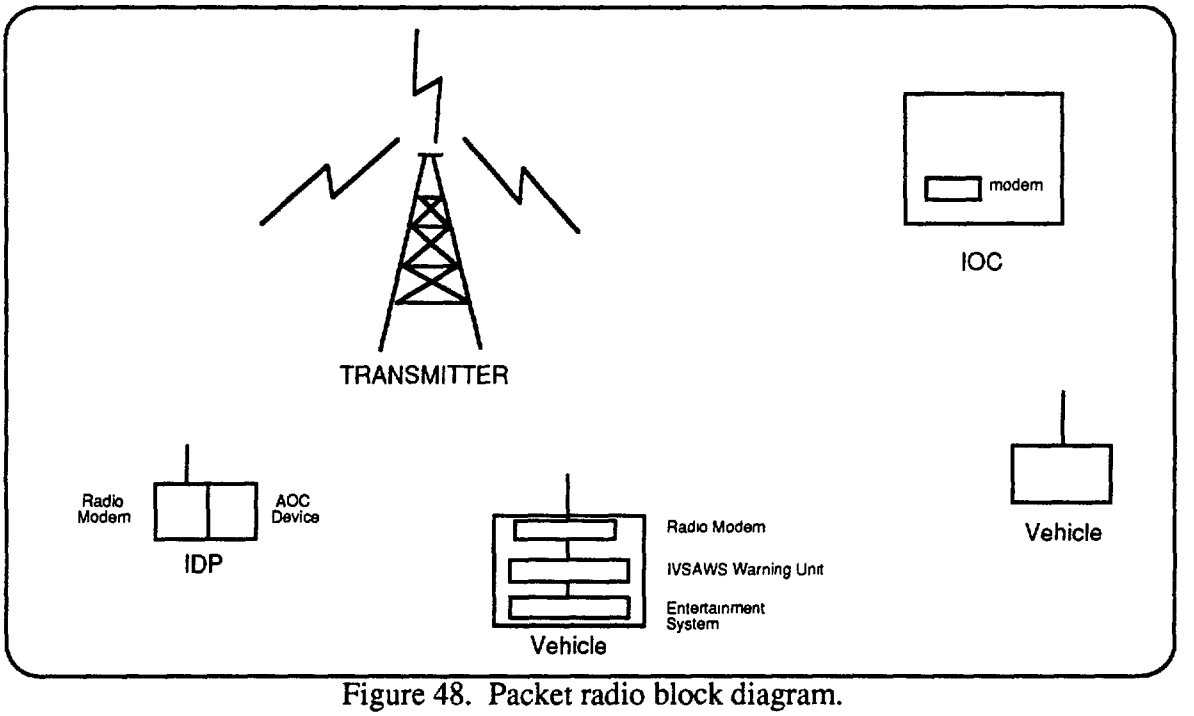

Figure 48. Packet radio block diagram.

Cost

- IOC.
  - Modem
    - Ericsson $1395
    - Motorola $3599 to $3999
  - Subscriber fee
    - RAM $0.03 to $0.77 per packet
    - Ardis $0.15 to $0.17 per packet

- End-User.
  - Modem
    - Ericsson $1395
    - Motorola $3599 to $3999
  - Subscriber fee
    - RAM $0.03 to $0.77 per packet
    - Ardis $0.15 to $0.17 per packet

System Interfaces

Each modem has its own proprietary packet switching protocol. The physical interface to a computer is standard RS-232.

Communication Backbone (IOC to Remote Sites)

RF options available to provide remote sites with information regarding incidents are: trunking, shared channel, and microwave. Trunking and shared-channel communication technologies not only could provide data to remote sites, but could provide a means for the IDP to send AOC and incident information from a remote site to the IOC.

Trunked Radio System

System Description

The trunked radio system gets its name from the “trunk” line used in commercial telephone communications, which is a communication path between two points (see figure 49). The trunk line is time-shared by several different users. This method of increasing the efficiency of a channeled radio system works by dynamically managing the use of the radio channels.

The main components of a trunked radio system include the site equipment (base/repeater station) and user equipment (mobile/portable units). Therefore, the coverage is the same as a two-way radio.

Trunk radios are well suited for communication backbone configuration that brings IOC data out to remote sites. Used in this way, trunk radios provides greater flexibility as compared to dedicated land lines.

Frequency

The system operates on the 403- to 512-MHz and 806- to 870-MHz frequency bands and requires FCC licensing prior to usage, Frequencies are assigned for each channel, with each channel requiring a license.

Data Rate

Transmission and receiver frequencies can be digitally trunked up to 25 channels, with each channel using the standard data rate of 9.6 kbps on a 25-kHz channel spacing.

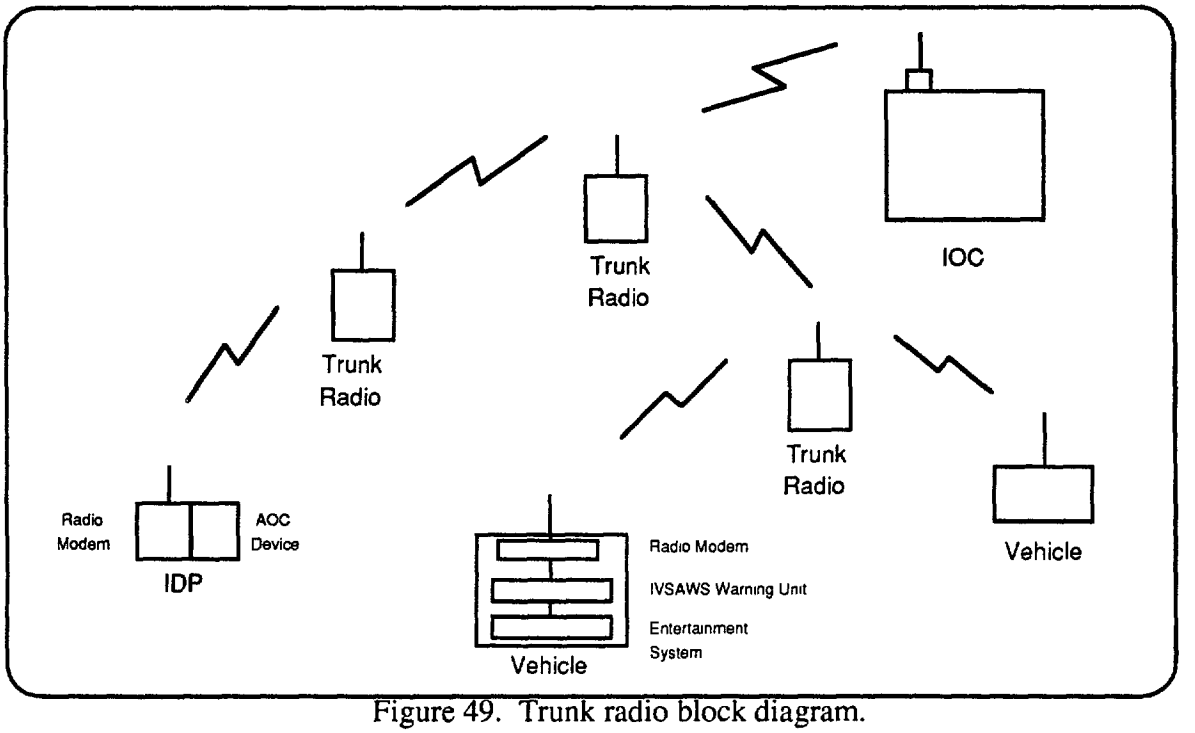

Figure 49. Trunk radio block diagram.

Coverage

Coverage for the digitally trunked radio channels depends on the terrain. In a mobile-to-mobile situation, the coverage could reach up to 16 km. From the IOC to a mobile receiver, the range of coverage could reach up to 32 km. Coverage between repeater stations could reach up to 80 km.

Status

Ground base stations, must consider the environment in terms of propagation of the signal. Environmental design considerations are: propagation characteristics of the frequency band, natural and manmade obstruction, reflection, and atmospheric noise.

The trunking system is a proven and reliable media for voice and data transmission. It provides better reliability compared to a channeled system. Maintenance of the system does not pose any problem because of the availability of proven spare and replacement parts in the market.

cost (IOC)

• Frequency usage.	~$13 per month per radio (depends on area to be covered)
• Base/repeater station.	~$1200 (includes antennas and other assorted accessories)
• Mobile unit.	~$700
• End-user.	Cost prohibitive from both a frequency usage standpoint (dollars and end-users on the channel) and unit cost.

System Interfaces

The logical interface for data transmission will most likely be a proprietary protocol. The physical interface connection for data transmissions will be of a standard commercial form, such as RS-232.

Shared Channel

System Description

Shared-channel radio is a mobile radio system allowing subscribers to share limited radio channels (see figure 50). These types of radio circuits may be characterized by their carrier frequency, which largely determines the behavior of the path. Application of this technology in the IVSAWS system is for point-to-point and multi-point voice or data transmission from hubs to the IOC, a communication backbone.

Frequency

Frequencies in the low band of 29.7 to 50 MHz, mid-band of 66 to 88 MHz, high band of 150 to 174 MHz, ultra-high frequency band of 403 to 5 12 MHz, 806 to 870 MHz, and the 900-MHz series are assigned by the FCC to a shared-channel system that provides service to various industries for radio communication.

Data Rate

Shared-channel capacity depends on the available frequency allocated for specific service by the FCC as listed in the FCC Rules and Regulations, Table of Frequency Allocations, Part 2 – Frequency Allocations and Radio Treaty Matters, General Rules and Regulations. Channeled radio can range from 1 to 4 channels with different transmission and receiver frequencies of up to 128 channels for synthesized microcomputer-controlled programming of frequencies.

The line-of-sight radio links in the range of 150 MHz to 900 MHz provide multi-channel transmission capability of 12 to 120 nominal 4-kHz voice channels in a Frequency Division Multiplexing (FDM) configuration.

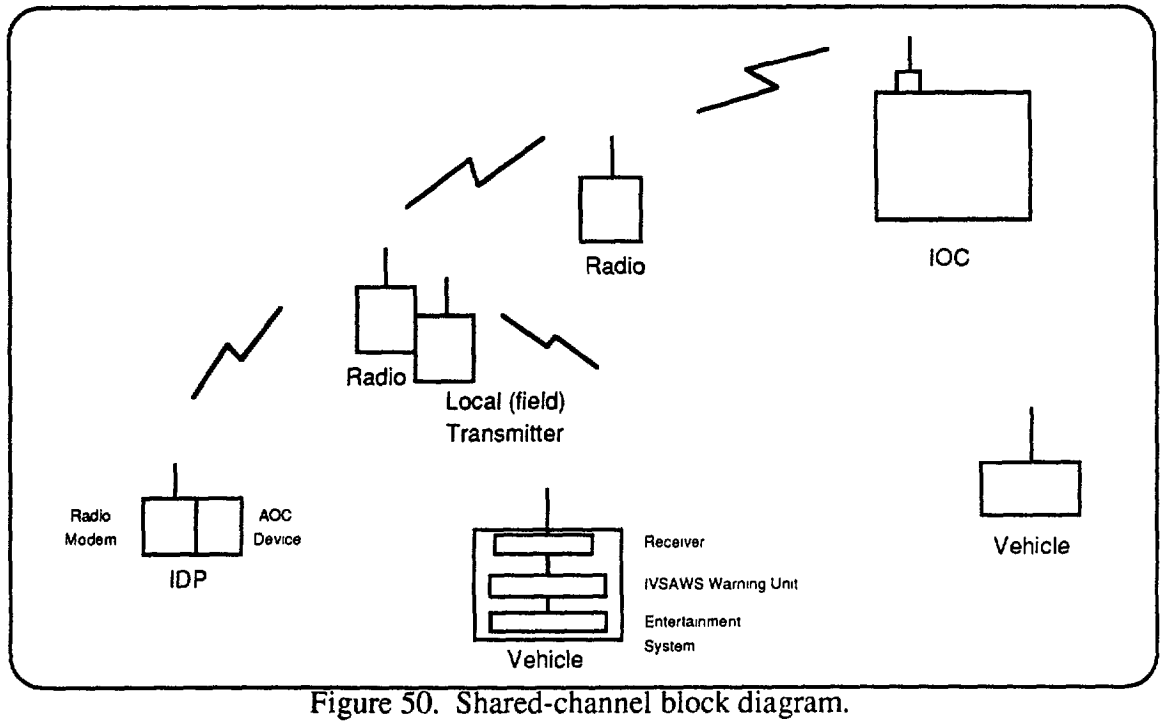

Figure 50. Shared-channel block diagram.

Coverage

Area coverage for this technology depends on the radio frequency band used for the transmission of signals. Frequencies assigned for the shared-channel service fall under the radio link line-of-sight propagation, which is made up of terminal radios and often one or more repeaters. Repeaters are spaced based on the terrain and earth curvature. Coverage can vary in range from up to 32 km from dispatch to mobile and up to 80 km for base station to base station.

Status

Ground radio links are subject to severe variations in received signal strength due to local variations in terrain, manmade structures, and foliage. For frequency ranges for shared channel above 30 MHz, radio signals tend to pass through the ionosphere, rather than reflect or refract sufficiently for use far beyond the visible horizon. That is why these frequencies are useful for line-of-site communication. The major setback for the radio communication media is the requirement for frequency licensing. System expansion is dependent upon the availability of frequencies.

Properly designed radio links will provide a reliable media available at least 99.95 percent of the time. Reliability is measured in terms of the radio frequency bands employed. Radio links are easier to maintain because modularity reduces the time required to make changes or repairs. Spare and replacement parts, including new equipment, are readily available as off-the-shelf products. Service life of the base stations and mobile units have averaged 20 years.

Cost

• IOC would require:	
- Transceiver	**$500 ♦□ $3000**
- Modem	**$1500 ♦□ $4000**
- Antenna	**$50 ♦□ $200**
- Frequency Usages	(licensing or leasing of the frequencies)
• Field (IDP or fixed site):	
- Transceiver	**$300 ♦□ $2000**
- Modem	$1500 to $4000
- Antenna	**$50 ♦□ $200**
• End-user.	Cost prohibitive in the frequency and equipment arenas. Recommendation is that this technology be used as a communication backbone to provide a means of getting the data out to remote sites.

System Interfaces

Connection of channeled radio to telephone or telegraph link requires an interface modem. The interfaces are expected to be commercial standard such that existing equipment is capable of being interfaced to the RF user unit.

Microwave

System Description

Microwave communication provides an alternative to leased-line and fiber-optic backbones. In areas where conduit is expensive or impossible to install and a connection to a leased line is not practical, microwave should be considered (see figure 51).

Microwave signals radiated from an antenna propagate through the atmosphere along a line-of-sight path. A line-of-sight radio link in the microwave frequency bands is made up of terminal radios and often one or more repeaters, depending on the distance of the link. The frequencies used must be unique in that area to prevent interference from other microwave transmissions. Because of this constraint, microwave frequencies are licensed by the FCC, and it can be very difficult to obtain a microwave frequency allocation in crowded urban areas. When frequencies are available, they are usually in the higher frequency bands (18 and 23 GHz), which have reduced transmission distances. Microwave links may be relocated easily, but require FCC coordination and approval for each end of a link that is moved.

Frequency

Microwave frequencies are those frequencies in the range above 1 GHz. The frequencies are currently allocated by the FCC for private and common carrier use and are in the 4-, 6-, 10-, 11-, 12-, 13-, 18-, 23-, and 28-GHz bands, the lower channels (2 through 12) are used for long-haul transmissions.

Data Rate

Data transmission is available for speed rates of either DS-1 (1.544 Mbps), DS-2 (6.3 12 Mbps), or DS-3 (44.736 Mbps) as described in the Bell Pub 43801 for digital channel banks.

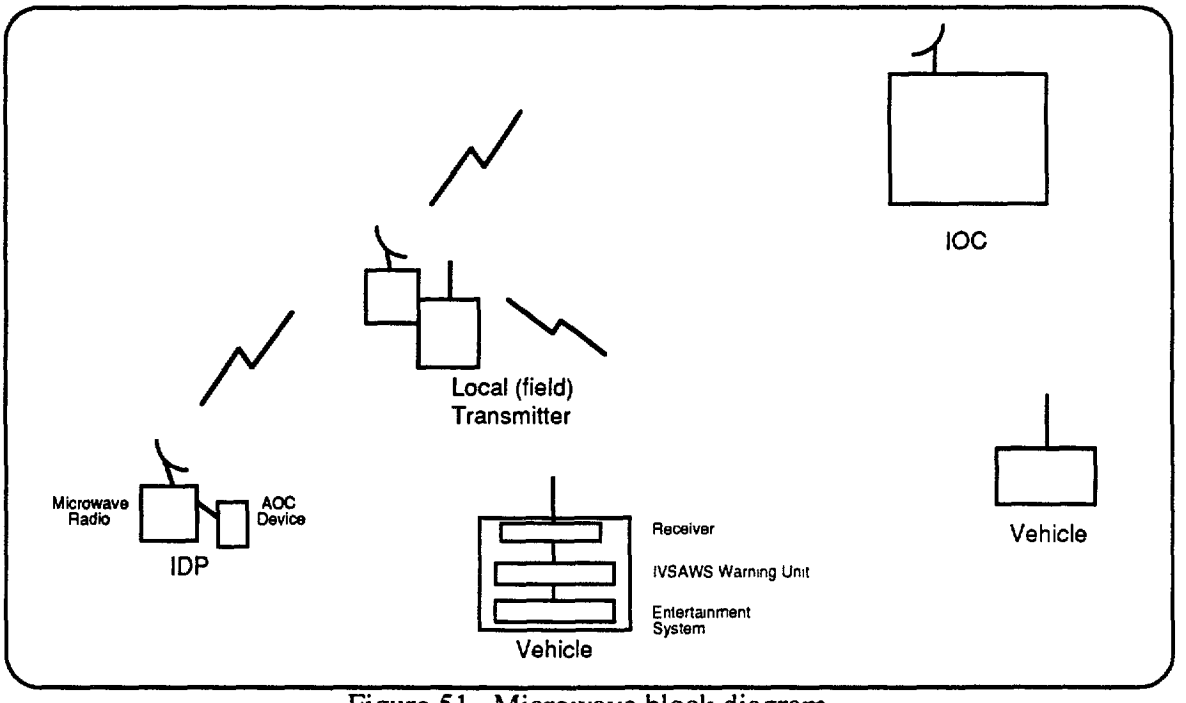

Figure 51. Microwave block diagram.

Coverage

A microwave line-of-sight path permits very high bandwidth communications. Microwave transmission requires a line-of-sight path with relay towers spaced according to the frequency ranges listed below:

2 GHz and 6 GHz	48.3 km
18 GHz	24.15 km
23 GHz	16.1 km

Status

The radio-frequency propagation is subjected to numerous technical problems, including propagation characteristics of the frequency band, natural and manmade interference, reflection, and noise. Line-of-sight networks encounter the most difficult environment in terms of propagation. Microwave radio paths over several miles long may suffer from fading, and the longer the path, the more the transmission is prone to fading. Fading is caused by atmospheric changes or ground and water reflections in the propagation path.

Microwave equipment is designed to yield a 99.95 percent reliability rate. With the available frequency bands, microwave transmission will experience attenuation limitations, thus reducing its reliability. Protected configurations ensure that the failure of key components will not disrupt traffic. Analog and digital microwave equipment are readily available in the market and obtaining replacement or spare parts is not expected to be a problem in the future.

As stated before, frequencies used must be unique in that area to prevent interference from other microwave transmissions. Because of this constraint, microwave frequencies are very difficult to obtain in crowded urban areas.

Cost

- IOC - To be determined.
- Field (IDP or Fixed Site) - To be determined.
- End-User - Not applicable.

System Interfaces

The interfaces are expected to be commercial standard such that existing equipment is capable of being interfaced to the microwave user unit.

Communication Architecture Summary

Table 18 summarized the functional characteristics for each of the communication architectures discussed. Table 19 compares the technologies for these systems in regard to their relevance to desired IVSAWS functionalities.

POSITION DETERMINATION ARCHITECTURE

Several position determination architectures were reviewed to provide the area of coverage (AOC) statistics for the IVSAWS system. Three candidates exist as viable architectures at the present time for land radio-navigation. The systems ranged from FM ranging to satellite ranging, all with varying levels of accuracy. The three considered were the Position Information Navigation System (PINS), the Global Positioning System (GPS), and LORAN-C. PINS is FM radio-based and enjoys a considerable cost advantage over the other systems, especially since IVHS activities will ultimately be funded through consumer purchases. GPS provides the most accurate location data and is becoming increasingly more cost-competitive as it is incorporated into more systems. LORAN-C is still largely focused for ocean and inter-coastal waterway navigation rather than nationwide land radio-navigation.

Position Information Navigation System

System Description

The Terrapin Corporation has developed the Position Information Navigation System (PINS). PINS is a terrestrial positioning system that determines location by using FM radio station broadcast. The PINS calculates position by combining signals from at least three FM stations with data from a known reference station (see figure 52).

The system uses a triangulation technique much the same as a GPS. The system measures the drift in the 19-kHz pilot tone signal. The system is not limited to FM; other transmission systems such as AM, cellular, or TV could also be used. One advantage to using FM is that the reference station could also be used as the radio data system station. In this way, the same receiver used in a vehicle for FM reception could be used to receive traffic information. The system is capable of a 20-m accuracy.

Frequency

The PINS works on the 19-kHz pilot tone used in all FM radio stations. The drift is measured from at least three stations and a reference station.

Data Rate

Each FM station is allowed a 15-kHz voice channel. The maximum data rate expected from a radio signal is theoretically 7500 bps. The reference station could therefore be used to transmit traffic information in urban areas with a minimal investment.

Coverage

The service area of the PINS system is expected to be the urban areas where FM stations are abundant. At least three FM stations are required to provide coverage in rural areas. The possibility of using AM stations will increase the coverage area in those locations where there is insufficient FM coverage.

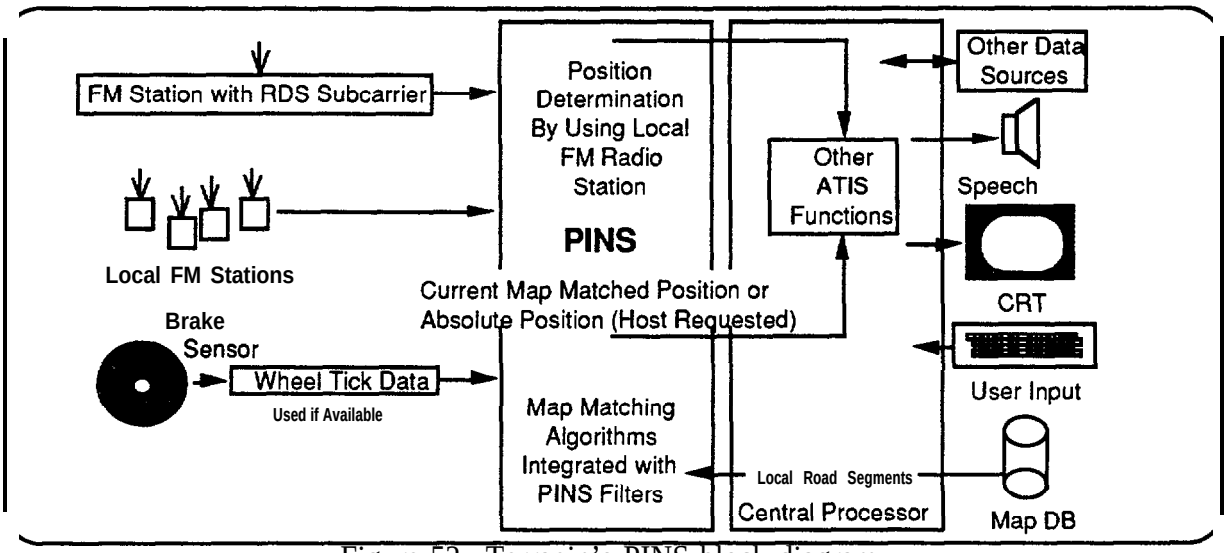

Figure 52. Terrapin's PINS block diagram.

Status

PINS testing began in February 1992 in Grange County, CA, by the Terrapin Corporation. Terrapin has secured financing for the PINS system and is expecting to begin production of PINS in the third quarter of 1993. Terrapin has filed for a U.S. patent for its PINS system.

Cost

The PINS system is expected to be a lower-cost alternative to Loran-C and GPS. Initially, PINS units will cost approximately $200, decreasing to a final cost of $100. The FM reference station is estimated to cost approximately $10,000. The reference stations will be needed in those cities where PINS is used.

System Interfaces

The PINS unit is expected to interface directly to the antenna and FM radio provided with nearly every automobile built for the U.S. market. The PINS will be capable of interfacing to other ATIS functions, such as map data, to provide current map matched position or absolute position as requested by the PINS user.

Global Positioning System

System Description

The Global Positioning System (GPS) is a constellation of 18 to 24 satellites used to accurately determine position. The GPS system provides accuracy of 25 to 50 m in normal operations mode. The GPS system is owned and operated by the U.S. Department of Defense, which has the capability to use a selective availability (SA) mode that degrades the position accuracy to within 100 m (see figure 53).

Several GPS equipment manufactures offer a package of differential GPS. Differential GPS is provided by placing a GPS receiver in a fixed and known location and determining the GPS offset provided by the GPS SA mode. The GPS offset is then communicated to the vehicles, the offset is applied to the received GPS data, and the position accuracy is determined to within 5 to 15m.

The GPS drawback is found in urban areas. GPS is a line-of-sight location determination system. The GPS system may be inhibited when used in center city areas where tall buildings will obstruct the view of the satellite system.

Frequency

The satellite signals are transmitted at two L-band frequencies, Ll of 1575.42 MHz and L2 of 1227.6 MHz. This is done to permit corrections for ionospheric delays in propagation.

Data Rate

The position information is communicated at 50 bps on both the Ll and L2 frequencies simultaneously. The message is 1500 bits long, is broken into five sub-frames of 6 s each, and requires 30 s to transmit. The data are transmitted in non-return-to-zero (NRZ) format.

Coverage

The GPS is a worldwide navigation system. The coverage is expected to be the surface of the earth. The coverage in the continental United States is comprehensive.

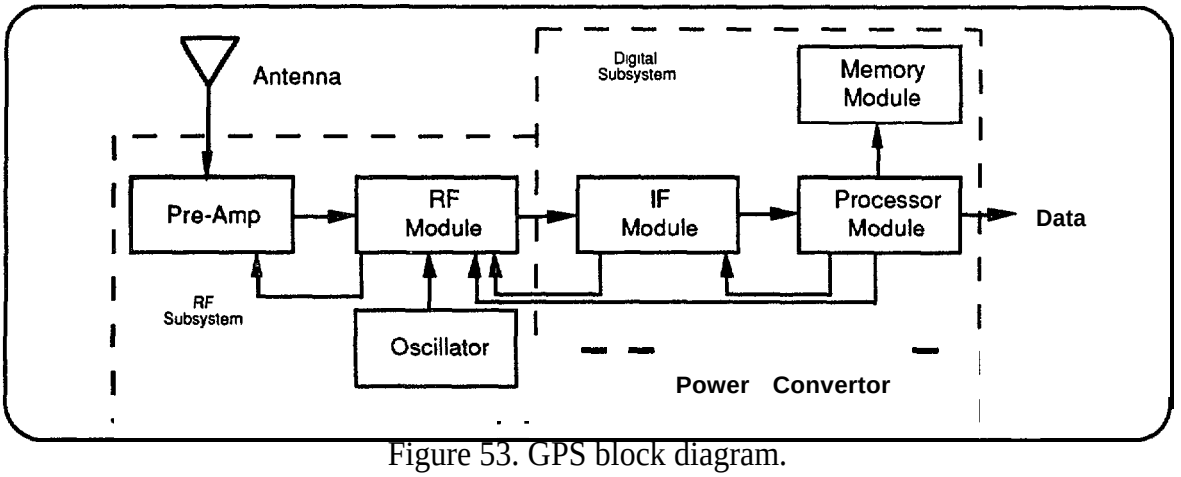

Figure 53. GPS block diagram.

Status

The GPS is operational today throughout the United States and is being used to provide automated vehicle location (AVL) services. Several equipment manufactures provide GPS units for personal use.

Cost

The cost of a personal GPS for the automobile is in the $500 range and is expected to be reduced to around $200 in the near future.

System Interface

The interfaces to the GPS units are typically RS-232 in the DB 9-pin configuration or RS-422 in the DB 15-pin configuration. These interfaces are commercially available at a low cost. Several radio modem and mobile data modem manufacturers include a GPS port for location reporting.

Loran-C

System Description

Loran-C is a long-range hyperbolic radio navigation system. Currently, there are 17 chains consisting of 50 transmitting stations. The system is highly accurate at distances of 1482 km to 1852 km. The absolute accuracy has been determined to be 0.4 km and the relative accuracy is 30 m relative. The Loran-C system is not accurate enough for the IVSAWS application (see figure 54).

The master station transmits synchronized, phase-coded pulses followed by the secondary stations in the chain. The master station transmits 8 pulses that are 1 ms apart, followed by a ninth pulse 2 ms later. The master station is followed, in turn, by the secondary stations at a prescribed interval. The secondary stations transmit pulses that are out of phase with the master station to differentiate them from the master station. The receiver then calculates position based on the time delays received and expected for the signals received.

Frequency

The signals are transmitted at 100 kHz. The phase coding allows the receiver to differentiate between the groundwave and the skywave on reception.

Data Rate

The position information is communicated via the pulses and fixed locations of the transmission stations. There is no data rate involved in Loran-C.

Coverage

The Loran-C is a worldwide navigation system. The coverage is expected to be the surface of the earth. The coverage in the continental United States is comprehensive.

Status

The Loran-C is operational today throughout the world and is being used to provide nautical navigation services. Several equipment manufacturers provide Loran-C units for boating use.

Cost

The cost of Loran-C has not been researched.

System Interfaces

The interfaces to the Loran-C units have not been researched.

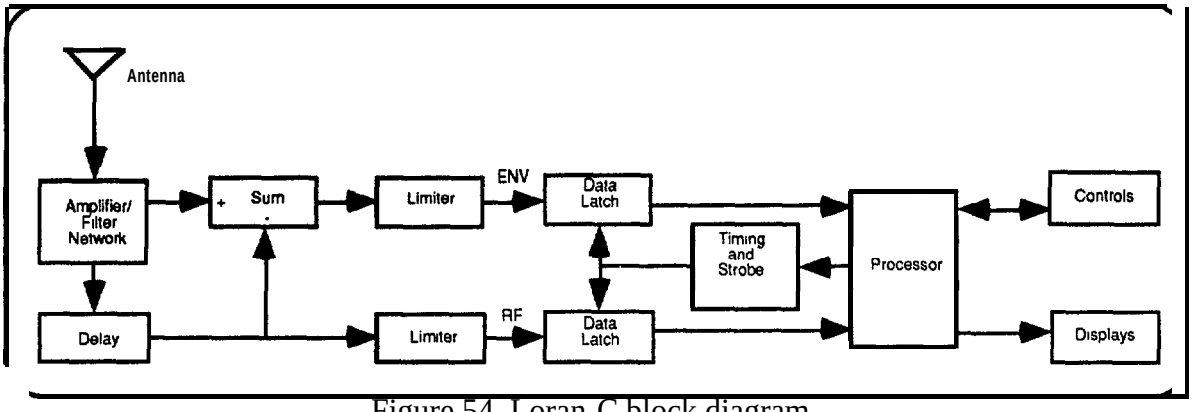

Figure 54. Loran-C block diagram.

ARCHITECTURE FUNCTIONALITY TRADEOFFS

Communications

As was stated in the IVSAWS functional definition document, there appears to be no IVSAWS without a frequency allocation. Currently, the commercial cellular, paging, and mobile and land frequencies are allocated and the IVSAWS would have to lease time from the carriers. Not only does leasing involve recurring costs for the IOC as well as the driver, the most limiting factor is that a continuous frequency availability will not occur throughout the United States. Cellular and packet radios, for example, do not cover rural areas; in some urban areas, the market is almost completely saturated for trunking and cellular.

Considering the cost of a system from a drivers point of view, the FM sideband combination of RBDS and SCA may prove most cost-effective. The RBDS provides for text and position data; the SCA provides the voice. The out-of-pocket expense to the driver would be the cost of a car stereo with RBDS capabilities (planned for most domestic vehicles over the next few years) and the cost of the IVSAWS warning unit. The unfortunate limitation, at this point, is that there are no scanning capabilities within the RBDS receivers, so the station that contains the RBDS would always have to be tuned in . A possible alternative would be to have the IVSAWS warning unit include an FM scanner to find the RBDS messages.

Without a specific frequency to call its own, IVSAWS may find that a combination of technologies could ultimately provide the best offering as far as cost and data transmission for the IVSAWS system. Examples of combinations could include the following:

Example #1:

LPHAR transmitting AM at fixed sites (or temporary sites) with the data getting to the remote unit via trunk radio. The IDP could send voice and data to the IOC via the same trunk radio system.

Example #2:
Using RBDS and SCA to get data out to the drivers and the IOC and IDP communication architecture could be some form of point-to-point technology (cellular, trunking radio, etc.).

Position

The IVSAWS concept is highly dependent on position accuracy. The ability to determine vehicle location and direction of travel are of paramount importance for dissemination of advisories and warnings. There are three major players in the radio location arena. GPS is a worldwide positioning system usable in the air, on land, and at sea. Loran-C is mostly used in the sea environment and the expected accuracy is commensurate with that arena. Finally, there is radio location based on the broadcast mediums.

The GPS solution is limited by the selective availability mode of operation, which is controlled by the U.S. Department of Defense. To alleviate this limitation, differential GPS is used to provide the corrections necessary for accurate GPS positioning. The differential GPS corrections need a broadcast frequency that can be monitored by the IVSAWS. The frequency used should be standard throughout the United States to ensure ease of implementation. The broadcast frequency could then be used to provide the IVSAWS data.

The broadcast medium solution can be linked to the frequency allocation issue. Without a fixed pilot station to take known measurements from, this solution will require pilot stations that are different in each market. The pilot station could also be used to broadcast the IVSAWS data. The radio location could then be accomplished by measuring AM, FM, TV, or cellular broadcast channel distances and direction determined by the change in location.

IVSAWS Functionality

Frequency Allocation

The overall frequency allocation by type of communication architecture is summarized in table 20.

Table 20. Frequency allocation.

Communication Architecture	Frequency
LPHAR	AM transmission band
AHAR	Lower Land/Mobile frequency bands
HAR	AM transmission band
RBDS/SCA	FM transmission sideband
SAP	TV transmission sideband
T-Net	UD to 900 MHz
I Cellular	824.04 to 848.97 MHz 869.04 to 893.97 MHz
Iridium	1.8 to 2.2 GHz
Impulse Radio	1.0 to 2.0 GHz
Packet-Data Wide-Area Network	Higher Land/Mobile frequency bands
Trunk Radio	403 to 5 12 MHz 806 to 870 MHz
Shared Channel	29.7 to 50 MHz 66 to 88 MHz 150 to 174 MHz 403 to 5 12 MHz 806 to 870 MHz 900 MHz
Microwave	4, 6, 10, 11, 12, 13, 18, 23, and 28 GHz

LPHAR

Transmission must be secondary non-interfering, no licensing required.

AHAR

Licensing required.

HAR

A TIS license is required from FCC; there is no fee for a Government agency. Obtaining the same channel across the country could be difficult; consideration should be given to using one of the newer frequencies (e.g., 1700).

RBDSISCA

Sideband leased from the FM station.

SAP

Sideband leased from the TV station.

T-Net

The FCC has not determined if the technology could be used on an already allocated TV frequency.

Cellular

License required from FCC. If license is already obtained, leasing of air time for both transmitter and receiver is required. Urban markets are almost saturated, and the systems are not widely available in non-urban areas.

Iridium

Monthly leasing for both IOC and end-users. Charges for air time for outgoing transmissions only.

Impulse

Application filed for use as a Personal Communications System (PCS) alternative in the Bell Atlantic service area. FCC approval has not as yet been granted.

Packet-Data Wide-Area Network

Leasing based on transmission (packets sent). The technology is not currently available in non-urban areas.

Trunk Radio

Licensing is required for channels used. If license is already obtained (which is going to be the case), channel may be leased from the licensee (varies).

Shared Channel

Licensing is required for channels used. If license is already obtained (which is going to be the case), channel may be leased from the licensee (varies).

Microwave

Microwave technology is saturated in urban markets and not widely available in non-urban areas.

Define Area of Coverage

The communication architecture's capability to transmit AOC information between the IVSAWS users is indicated in table 21.

Table 21. Transmission capability.

Architecture	IDP to IOC	IDP to Vehicle	IOC to Vehicle	IOC to Field
LPHAR	N/A	V	V	N/A
AHAR	N/A	V, D	V, D	N/A
HAR	N/A	V	V	N/A
RBDS/SCA	V, D	N/A	V, D	V, D
SAP	V, D	N/A	V, D	V, D
T-Net	V, D	V, D	V, D	V, D
Cellular	V, D	V, D	V, D	V, D
Iridium	V, D	V, D	V, D	V, D
Impulse	V, D	V, D	V, D	V, D
Packet Data	D	V, D	V, D	V, D
Trunk Radio	V, D	See note	See note	V, D
Shared Channel	V, D	See note	See note	V, D
Microwave	V, D	N/A	N/A	V, D

Legend:
D – Data
V – Voice
N/A – Not applicable

LPHAR

IDP to vehicle - technology lends itself to fixed or temporary sites, voice only, local broadcasts. AOC cannot be selected, however, the coverage lends itself to omni-directional broadcasting up to 0.8 km from the transmitter. Usage of directional antennas could assist in the narrowing of the coverage.

AHAR

IDP to IOC - data transmission limited to tones, not well suited for AOC data. IDP to vehicle - AOC limited by the transmitter power. Coverage is omni-directional. Usage of directional antennas could assist in the narrowing of the coverage.

HAR

IDP to vehicle - technology lends itself to fixed or temporary sites, voice only, local broadcasts. AOC cannot be selected, however, the coverage lends itself to omni-directional broadcasting from the transmitter. Usage of directional antennas could assist in the narrowing of the coverage.

T-Net

IDP to vehicle - voice and digital (AOC) data capabilities, but only via the main transmitter, not directly.

Trunk Radio

lDP to vehicle - monetarily not feasible. IOC to vehicle - monetarily not feasible. IOC to field - ideal for sending data from IOC to each fixed field transmitter device.

Shared Channel

IDP to vehicle - monetarily not feasible. IOC to vehicle - monetarily not feasible. IOC to field - ideal for sending data from IOC to each fixed field transmitter device.

Microwave

IDP to IOC - transmission of voice and data from parked mobile unit. IOC to field - ideal for sending data from IOC to each fixed field transmitter device.

Refine Zone Location - to be determined

Tailor IVSAWS Message

Table 22 lists the digital data transfer capability for each communication architecture listed in the study.

Table 22. Communication architecture transfer rate.

Comm. Architecture	Data Rate	User-Defined Format
LPHAR	N/A	N/A
AHAR	up to 9.6 kbps	Yes
HAR	N/A	N/A
RBDS/SCA	up to 1200 bps	No
SAP	up to 19.2 kbps	Yes
T-Net	up to 16 kbps	Yes
Analog Cellular	up to 4800 bps	Yes
Digital Cellular	up to 48.6 kbps	Yes
Iridium – Voice	up to 4800 bps	N/A
Iridium – Data	up to 2400 bps	Yes
Impulse	up to 1 Gbps	Yes
Packet Data	up to 19.2 kbps	Yes
Trunk Radio	up to 9.6 kbps	Yes
Shared Channel	up to 9.6 kbps	Yes
Microwave	up to 44.736 Mbps	Yes

Generate Alert

The communication architectures shall provide for the following warning and advisory zone coverage for all major secondary roads in the United States.

LPHAR

Able to be used throughout the United States. Limitations come in frequency selections due to the “secondary non-interfering” limitation placed on the transmission. Each area has different AM frequencies being used.

AHAR

See Shared Channels.

HAR

Able to be used throughout the United States. Limitations come in frequency selections due to AM frequencies being used randomly throughout the United States. Possibility of utilizing one of the newer frequencies (e.g., 1700) throughout most of the country.

RBDSISCA

Available wherever FM stations have transmission coverage. No consistent frequency will be able to be used due to inability to lease sidebands and some frequencies are not utilized in all areas. IVSAWS warning unit will have to provide scanning capabilities.

SAP

Available wherever TV stations have transmission coverage. No consistent frequency will be able to be used due to inability to lease sidebands and some frequencies are not utilized in all areas. IVSAWS warning unit will have to provide scanning capabilities.

T-Net

The technology is new and not currently setup. IVSAWS, providing FCC approval for sharing TV frequencies, would have to set up the systems.

Cellular

The available cellular frequencies should all be controlled, meaning that the only cellular frequencies available would be through leasing. Most urban areas are saturated, but rural areas are less than adequately covered.

Iridium

The consortium was formed in 1991 and it is expected that the first seven satellites will be launched, the system control facility will be operational, and four gateways will be operational in 1994. Early iridium service will be available and the full constellation will be deployed by 1996; the iridium system and additional gateways will be fully operational by 1997.

Impulse

Initial operations area is expected to be in the Bell Atlantic operation zone. Individual licenses could be applied for, however, manufacturer is exploring use in the Personal Communications System (PCS) market.

Packet-Data Wide-Area Network

Available in most urban areas, currently not offered in rural areas. License to transmit in rural areas required, along with transmitters and all applicable hardware.

Trunk Radio

The available trunking frequencies should all be controlled, meaning that the only trunking available would be through leasing. Most rural areas are less than adequately covered.

Shared Channel

The available frequencies should all be controlled, meaning that most of the shared-channel frequencies would be obtained through leasing. Most rural areas are less than adequately covered.

Microwave

Frequencies in urban areas are taken, so either there is microwave frequencies available to lease or not available at all. If planning on utilizing technology in rural areas with no current coverage, licensing and transmission facilities will be required.

Alert Driver

The communication architecture provides, in some cases, error detection and recovery to help minimize the false alarm rate and maximize the percentage of messages that get to the driver. Table 23 shows which architectures provide error detection and correction.

Table 23. Error detection and recovery capability.

Communication Architecture	Error Detection/ Recovery
LPHAR	No
AHAR	No
HAR	No
RBDS/SCA	Yes
SAP	Yes
T-Net	Unknown
Analog Cellular	No
Digital Cellular	Yes
Iridium	No
Impulse	Unknown
Packet-Data Wide-Area Network	Yes
Trunk Radio	Yes (data only)
Shared Channel	Yes (data only)
Microwave	Yes

CHAPTER 10. NARROWBAND GPS ARCHITECTURE WAVEFORM DESIGN

ARCHITECTURES

Based on the system architecture analysis, two architectures satisfied the IVSAWS operational requirements. In particular, the two architectures are both compatible with centralized broadcast from a regional IVSAWS operations center and both use currently available geolocation systems to provide precise area of coverage for the hazard advisories and alert warnings.

System architecture number two is the Radio Broadcast Data System with Global Positioning System or Position Information Navigation System. RBDS is a motorist Intelligent Vehicle-Highway System information standard developed in Europe and the United States. RBDS transmits digital data in conjunction with FM radio signal. Digital alert messages containing geographic coordinates for the alert zones can be combined with the geolocation system to provide warnings to motorists when they are within the precise area of coverage. Since RBDS includes its own message catalog and standardized waveform, a separate waveform design is not necessary for this architecture.

System architecture number one is an IVSAWS-specific design tailored to the nationwide narrowband channel currently available in the United States. Again, digital alert messages containing geographic coordinates for the alert zones can be combined with the geolocation system to provide warnings to motorists when they are within the precise area of coverage. In this instance, however, the message catalog and waveform design can be optimized for performance with the IVSAWS scenarios. In particular, the network architecture for this waveform will enable mobile alerts from emergency vehicles to be incorporated into the overall hazard alert process. This section presents the details of this IVSAWS-based waveform design for a narrowband GPS solution. The following design examines the communication channel performance of this narrowband GPS waveform design.

MODULATION

The modulation method used shall be $\frac{\pi}{4}$ shifted, differentially encoded quadrature phase shift keying as described in the following paragraphs. A description of the forward error correction technique to be applied prior to modulation is also discussed.

Forward Error Correction (FEC)

The binary data stream entering the modulator, b_m, shall be converted into two separate binary streams, X_k and Y_k, via a convolutional encoder. The encoder shall be a 1/2-rate constraint length seven (k = 7) convolutional encoder.

A block diagram of the rate 1/2, k=7 encoder is shown in figure 55. The generating functions, denoted as G0 and G1, shall be 1111001 (binary) and 1011011, respectively. At each b_m bit input, the data stream is convolved with the generating functions to produce two code words, X_k and Y_k.

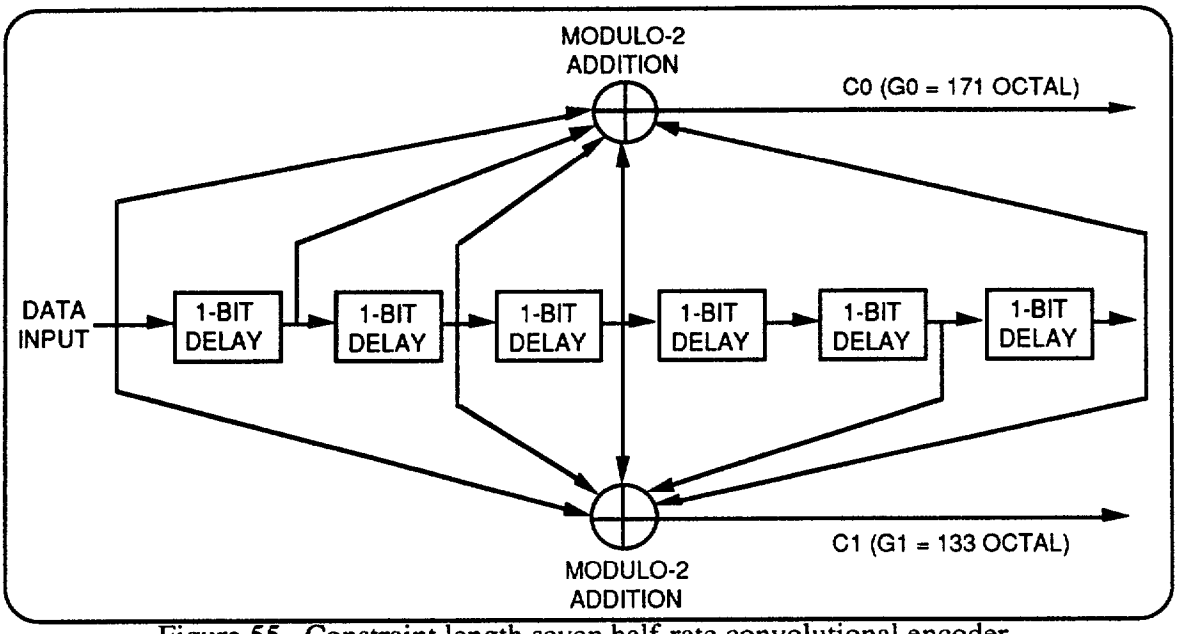

Figure 55. Constraint length seven half-rate convolutional encoder.

Differential Encoding

The binary data sequences X_k and Y_k are differentially encoded onto I_k and Q_k according to:

$$I_k = I_{k-1} \cos[\Delta\Phi(X_k,Y_k)] - Q_{k-1} \sin[\Delta\Phi(X_k,Y_k)]$$

$$Q_k = I_{k-1} \sin[\Delta\Phi(X_k,Y_k)] + Q_{k-1} \cos[\Delta\Phi(X_k,Y_k)]$$

where I_{k-1}, Q_{k-1} are the amplitudes at the previous pulse time. The phase change $\Delta\Phi$ is determined according to table 24.

Table 24. Differential phase code.

X_k	Y_k	$\Delta\Phi$
0	0	$\frac{\pi}{4}$
0	1	$\frac{3\pi}{4}$
1	0	$\frac{-\pi}{4}$
1	1	$\frac{-3\pi}{4}$

The signals I_k, Q_k at the output of the differential phase encoding block can take one of five values, 0, ±1, $\pm\frac{1}{\sqrt{2}}$, resulting in the constellation shown in figure 56. Odd (denoted ⊕) and even (denoted ⊗) symbol constellations are offset by $\frac{\pi}{4}$ radians.

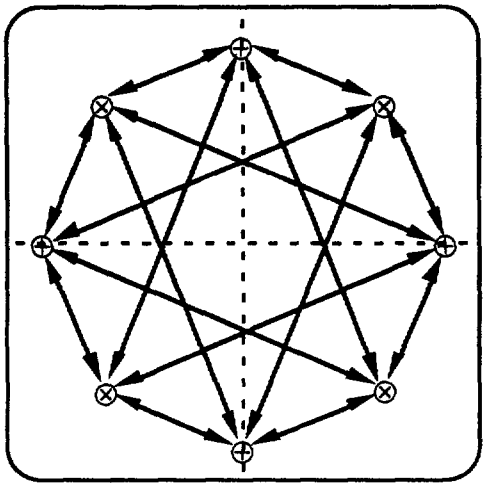

Figure 56. $\frac{\pi}{4}$ shifted, differentially encoded QPSK constellation.

Baseband Filtering

Impulses I_k, Q_k are applied to the inputs of the I and Q baseband filters. The baseband filters shall have linear phase and square root raised cosine frequency response of the form:

$$|H(f)| = \begin{cases} 1 & 0 \le f \le \frac{(1-\alpha)}{2T} \\ \sqrt{\frac{1}{2}\left\{1 - \sin\left[\frac{\pi(2fT-1)}{2\alpha}\right]\right\}} & \frac{(1-\alpha)}{2T} \le f \le \frac{(1+\alpha)}{2T} \\ 0 & f > \frac{(1+\alpha)}{2T} \end{cases}$$

where T, the symbol period, is equal to twice the reciprocal of the baseband data rate (6075 bps). The roll-off factor, a, determines the width of the transition band, and is 0.35.

Modulation at Radio Frequency (RF)

Symbols are transmitted as changes in phase rather than absolute phases. The resultant transmitted signal s(t) is given by:

$$s(t) = \sum_n h(t - nT) \cos\Phi_n \cos\omega_c t - \sum_n h(t - nT) \sin\Phi_n \sin\omega_c t$$

where h(t) is the baseband filter impulse response (finite), ω_c is the radian carrier frequency, T is the symbol period, and Φ_n is the absolute phase corresponding to the nth symbol interval. The Φ_n, which results from the differential encoding is:

$$\Phi_n = \Phi_{n-1} + \Delta\Phi_n$$

Figure 57 illustrates a block diagram of the modulation process from binary data input, b_m, through signal output, s(t).

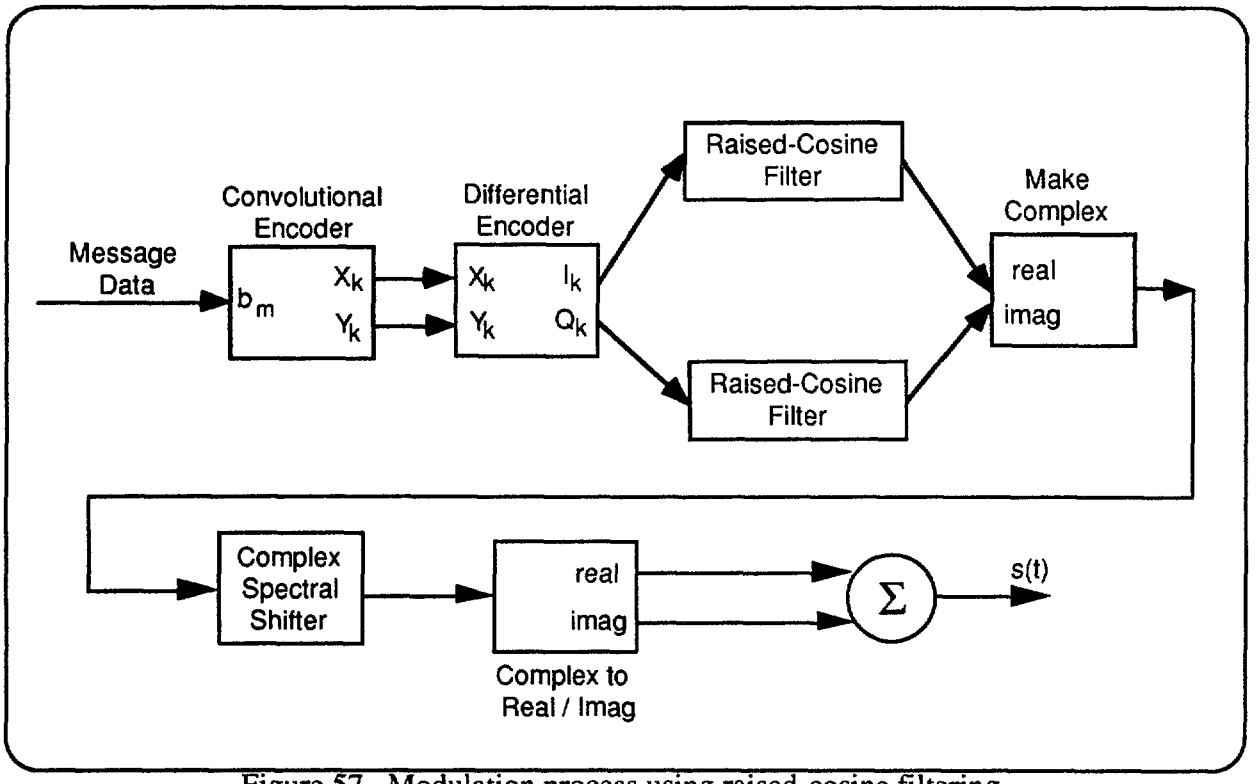

Figure 57. Modulation process using raised-cosine filtering.

TRANSMITTER OUTPUT

Operating Frequencies

Radios shall operate using one channel of the 220-MHz to 222-MHz band. The channel consists of a frequency pair separated by 1 MHz. IVSAWS operating frequencies in the 220-MHz to 222-MHz band - to be determined (IVSAWS can operate effectively using a single 220-MHz to 222-MHz channel nationwide allocation. It is strongly recommended that the FHWA pursue an IVSAWS allocation in this frequency band).

Frequency Tolerance

Frequency tolerance for base stations shall be 0.1 ppm. Frequency tolerance for mobile units shall be 1.5 ppm.

Spectral Containment

The required emissions mask shall be as specified in paragraph 102 of the Amendment of Part 90 of the Commission's Rules to Provide for the 220-MHz to 222-MHz Band by the Private Land Mobile Radio Services. Figure 58 illustrates the specified emissions mask. Power is relative to the maximum effective radiated power (ERP).

Transmitter Power

Transmitter power shall be as specified in paragraphs 115 and 116 of the Amendment of Part 90 of the Commission's Rules to Provide for the 220-MHz to 222-MHz Band by the Private Land Mobile Radio Services.

SIGNAL STRUCTURE

Introduction

This section provides a definition of the alert signal structure. Included are: message format and bit structure, coding, framing, and synchronization.

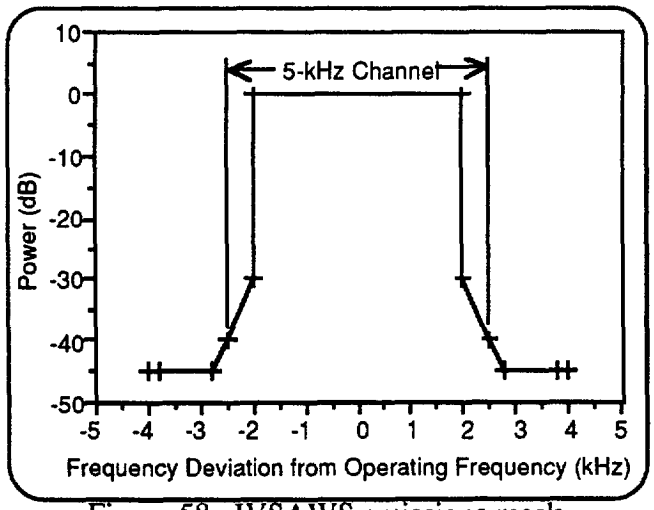

Figure 58. IVSAWS emissions mask.

Frame Structure

Each frame shall be 6075-bit periods in duration. The frame structure is shown in figure 59. Each frame is divided into three time slots, designated slot 1 through slot 3. Signaling shall occur at a rate of 6075 bps (3037.5 symbols per second).

Time Slot Structure

Each time slot shall be 2025-bit periods in duration. The time slot structure is shown in figure 59. Each frame is divided into five alerts, designated alert 1 through alert 5.

Message Structure

The basic alert message shall consist of 183 bits of information, excluding guard time, transmitter power ramp up time, and synchronization. The basic alert message structure is shown in figure 59. The 183 bits of information shall be convolved into a 366-bit message (see the following analysis). Including guard time, transmitter power ramp up time, and synchronization, the alert message shall be 405-bit periods in duration. In addition to the basic message type, continue, free-text, delete, system time and offset, and area of coverage (AOC) extension messages are defined.

Guard

Alert guard shall be S-bit periods in duration.

Transmitter Power Ramp Up

Transmitter power ramp up shall be 6-bit periods in duration.

Synchronization

The synchronization word is a 28-bit field used for alert synchronization and equalizer training (equalizer implementation is not required). The synchronization word shall be A9 lDE4Ah.

Alert Type

Alert type is a 3-bit number that identifies the type of alert message being broadcast. Table 25 identifies the relationship between the contents of alert type and the type of message being broadcast.

Table 25. Alert type!

Message Type	Alert Type Value
Basic (stationary alert zone)	0
Basic (mobile alert zone)	1
Continue	2
Delete	3
System time and GPS correction	4
Free text	5
AOC extension	6
Reserved	7

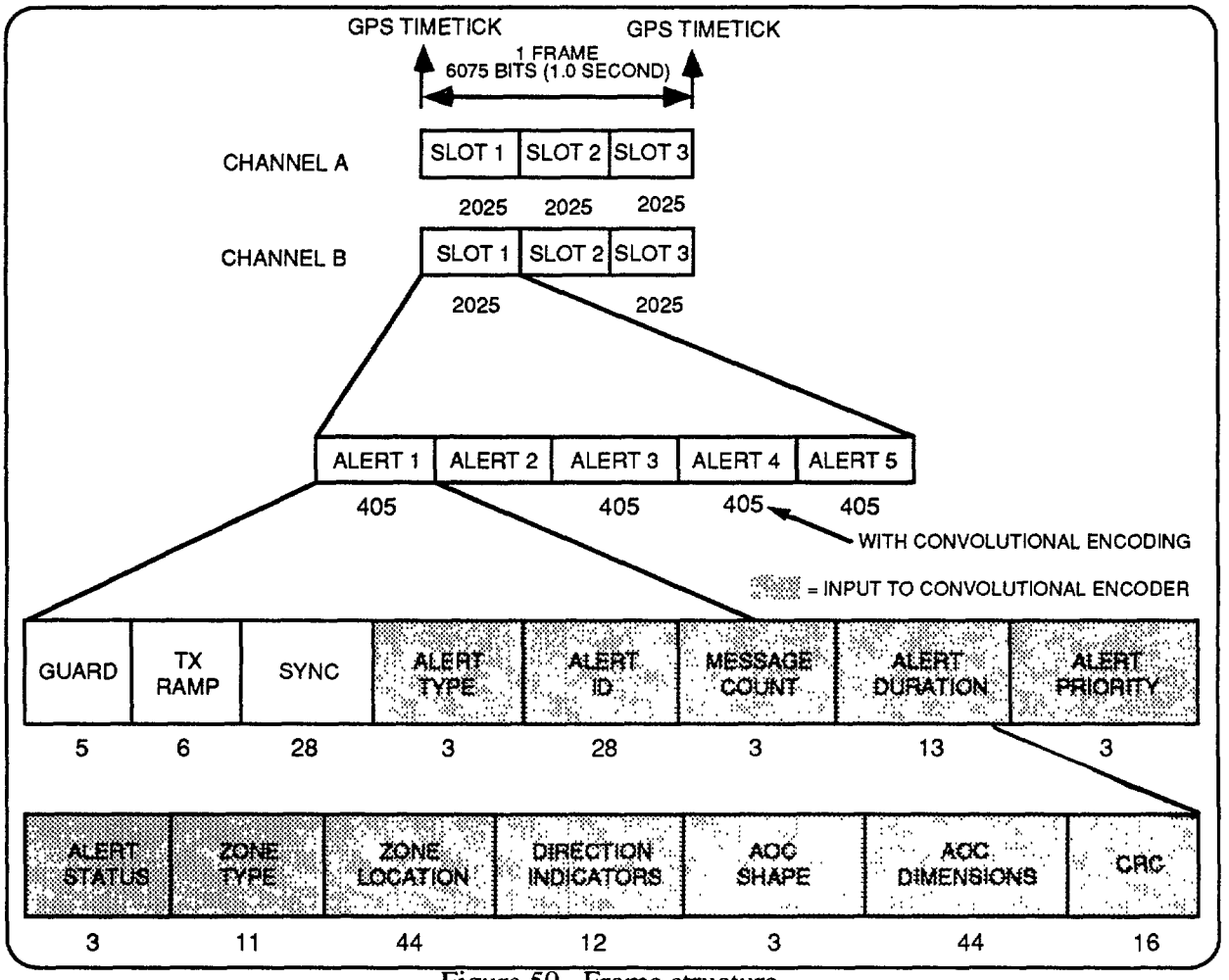

Figure 59. Frame structure.

Basic Alert Message

The basic alert message structure is shown in figure 59.

Alert ID

Alert ID is a 28-bit number that uniquely identifies an alert message. IVSAWS can issue 268,435,456 alerts without alert ID reuse. Mobile units shall be assigned a unique alert ID that will be used for all alert broadcasts.

Message Count

The message count shall identify the number of continue, free text, and or AOC extension messages to follow (0 -7).

Alert Duration

Alert duration is a 13-bit field that specifies the time at which an alert shall be deleted from the alert data base. Alert duration shall be relative to system time (see the following analysis). Table 26 shows the field structure.

Table 26. Allocations for alert duration.

Segment	Bits
Coarse duration	2
Time offset	11
Total	13

Coarse duration specifies the time reference of the time offset. If coarse duration is 00, time offset shall be relative to midnight of the current day (0000 hours). Time offset shall then specify the alert expiration time in terms of the number of minutes past midnight. When system time equals alert expiration time, the alert shall be removed from the vehicular data base. If coarse duration is 01, time offset shall be relative to midnight of the first day of the current month. Time offset shall then specify the alert expiration time in terms of the number of hours past midnight of the first day of the current month. When system time equals alert expiration time, the alert shall be removed from the vehicular data base. If coarse duration is 10, time offset shall be relative to midnight of the first day of the current year. Time offset shall then specify the alert expiration time in terms of the number of days past the first day of the current year. When system time equals alert expiration time, the alert shall be removed from the vehicular data base. If coarse duration equals 11, the alert can only be removed from the data base via the receipt of a delete message (see the following analysis).

Alert Priority

Alert priority shall be set from 0 to 7 to indicate the relative urgency or severity of the embedded hazard or advisory message. 0 is the lowest priority; 7 is the highest priority (most severe).

Alert Status

Alert status shall be set from 0 to 7 to indicate the source or condition of the embedded hazard or advisory message. Table 27 correlates alert status with alert status value.

Table 27. Alert status.

Alert Status	Alert Status Value
Confirmed	0
Unconfirmed	1
Forecast	2
Reserved	3 through 7

Zone Type

Zone type is an 1 l-bit pointer to one of 2048 hazard and advisory messages stored within a vehicular IVSAWS data base. It identifies a message to be presented to a driver via a display or

speech synthesizer. The message list used shall be a tailored version of the RDS ALERT C message list.

Zone Location

Zone location is a 44-bit field used to identify the position of a hazard or advisory site (see table 28). The grid reference system is based on the Universal Transverse Mercator (UTM) projection. As shown in figure 60, the features on the surface of the earth (from 80° S latitude to 84° N latitude) are projected onto a cylinder, and the cylinder is flattened to achieve 6°-wide zones (see figure 61). A five-element term is used to designate coordinates (e.g., NN A ala2 eeeee nnnnn). The term NN refers to 1 of the 60 zones and the term A designates 1 of the 20 latitude bands, labeled C through X, in figure 61. Each UTM zone is divided into a number of 100-km squares, as shown in figure 62. Each of these grid squares has a two-character designator (a la2) known as the alpha pair designator. The al character designates the column a grid square is in and the a2 character designates the row. The alpha pair designators occur in a normal sequence, and repeat approximately every 2000 km north or south, and every 18° east or west. Within a single-grid square (see figure 62), a position can be indicated by two numbers: easting (eeeee), the distance in meters from the west edge of the grid square, and nothing (nnnnn), the distance in meters from the south edge of the grid square. Since IVSAWS driver alert distances are small (less than 2 km), the grid-zone designator can be dropped and an IVSAWS zone location thus has the form: a 1 a2 eeeee nnnnn.

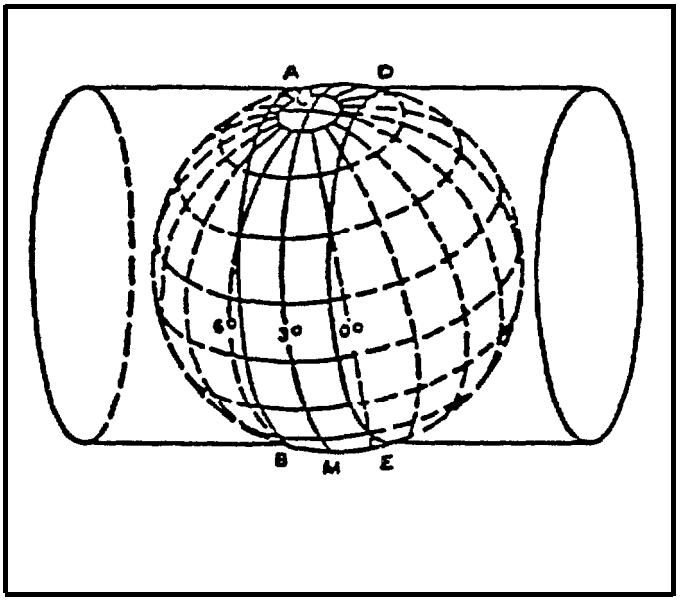

Figure 60. The Traverse Mercator Projection (the cylinder is chosen slightly smaller than the earth to reduce distortion to a minimum between angles and distance on the earth as compared to the same two quantities on the map).

Table 28. Field allocations for zone location.

Station Location Segment	Bits
Alpha designator – column ($\alpha 1$)	5
Alpha designator – row ($\alpha 2$)	5
Easting (eeeee)	17
Northing (nnnnn)	17
Total	44

Direction Indicators

Direction indicators are a 12-bit field used to limit alert dissemination to vehicles based upon their direction of travel. Each bit covers a 30° segment (see figure 63). Setting a bit of this field to a 1 permits alert dissemination to vehicles traveling in the corresponding directional range. Setting a bit of this field to a 0 prohibits alert dissemination to vehicles traveling in the corresponding directional range. For example, setting all bits to 1 enables omni-directional alert dissemination.

AOC Shape

AOC shape is a 3-bit field used to define the shape of the intended area of alert coverage. Table 29 identifies valid shapes. If the shape is extended, an AOC extension message shall follow that defines the AOC dimensions (see following analysis).

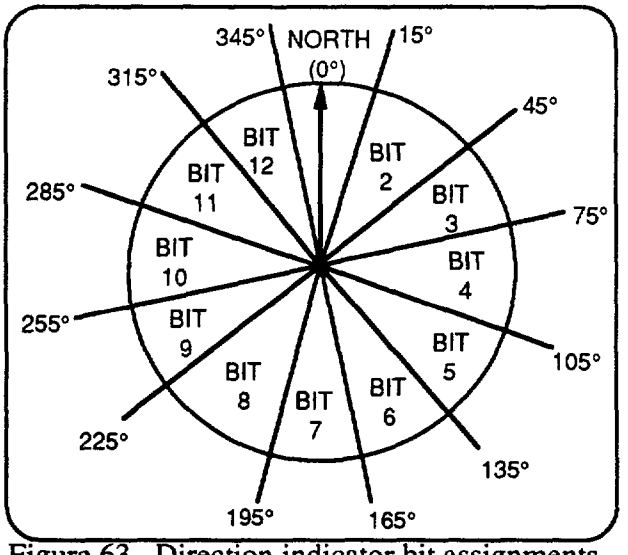

Figure 63. Direction indicator bit assignments.

Table 29. AOC shapes.

Shape	Value
Box	0
Circle	1
Semicircle	2
Reserved	3 through 6
Extended	7

AOC Dimensions

AOC dimensions are a 44-bit field used to define the dimensions of the area of alert coverage. The format and content of the field is AOC shape-dependent and is to be determined. If the AOC shape is extended, this field shall be set to all zeros.

Continue Message

The continue message is used to extend the basic alert message. Figure 64 shows the continue message structure.

Alert ID

The alert ID shall be set equal to the alert ID of the source basic alert message.

Message Count

Message count shall identify the current continue, free-text, or AOC extension message number (1 through 7).

Message Extension

Message extension is subdivided into 13 subfields. Each subfield consists of a 2-bit header followed by an 11-bit data or pointer segment. The header can assume one of four values and identifies the type of information in the segment, as listed in table 30. Customized messages can therefore be created by using a combination of "canned" alert message data base messages and site-specific data.

Table 30. Message extension subfield contents.

Contents	P/D
Not used	0
Pointer to alert message data base	1
Data	2
Reserved	3

Free-Text Message

The continue message is used to extend the basic alert message. Figure 65 shows the free-text message structure.

Alert ID

The alert ID shall be set equal to the alert ID of the source basic alert message.

Message Count

Message count shall identify the current continue, free-text, or AOC extension message number (1 through 7).

Free Text

Free text is a field used to send site-specific information to the driver. Typically, it could be used to identify the names of roads at which an incident has occurred (e.g., 15 at HIWAY 39).

Delete Message

The delete message is used to erase messages from vehicular alert data bases. The delete message structure is shown in figure 66.

Alert ID

Alert ID shall be set equal to the ID of the alert to be erased from the alert data base.

GPS Correction Message and System Time

Each base station shall transmit a system time and GPS correction message, once per second, as the first alert (ALERT 1, figure 59) of its assigned slot. The message structure is shown in figure 67. Station ID, station health, and Z-count shall be transmitted with each message and are defined in table 31. System time and/or GPS correction fields are also incorporated into each message. The first bit of each field (C/T control bit) identifies the field type. A system time field shall be broadcast once every 3 s. For each GPS satellite viewed by the IVSAWS base station, a GPS correction field shall be broadcast. If more than four satellites are in view (three satellites, if a system time field is broadcast), alternate messages shall divide the satellite corrections.

Table 31. Station ID, station health, and Z-count field structure.

Field	Scale Factor and Units	Range	Bits
Station ID,	1	0-131,071	17
Station Health,		4 States	2
Z- count	6 s	l-100,794 s	17

GPS Satellite Corrections

GPS pseudo-range and range-rate corrections are used to improve the accuracy of hazard and vehicle position measurements utilizing differential GPS. Table 32 shows the GPS correction field structure.

TABLE 32. Field structure for GPS correction

TABLE 33. Field allocations for system time.

FIGURE 64. Continue message structure.

FIGURE 65. Free-text message structure.

FIGURE 66. Delete message structure.

FIGURE 67. System time and GPS correction message structure.

FIGURE 68. AOC extension message.

communication zones can operate simultaneously without interference. The beginning of slot 1 (both channels A and B) shall be aligned with the once-per-second GPS time marks.

System Time and Offset Broadcasts

Each base station shall transmit a system time and GPS correction message, once per second, as the first alert (ALERT 1, figure 59) of its assigned slot.

Other Broadcasts

The remaining four alert positions are available for basic, continue, free-text, and delete message broadcasts. Base stations shall queue all messages to be broadcast into a buffer. The buffer shall be transmitted repeatedly in ALERT 2 through ALERT 5 positions. Base stations shall remove messages from the queue only upon command from the system controller.

Mobile Stations

Time slot 3 of each channel is reserved for transmissions by mobile stations. When activated, mobile stations shall broadcast one basic alert message every three frames. Mobile stations shall randomly select one of 30 available alert positions (2 channels x 5 alert positions/channel x 3 frames) for the basic alert broadcast (slotted Aloha protocol). Mobile stations shall not broadcast delete, free-text, continue, or system time and GPS correction messages. The alert ID of the mobile station basic alert message shall be preassigned and shall remain constant for all broadcasts.

CHAPTER 11. NARROWBAND GPS ARCHITECTURE PERFORMANCE ANALYSIS

INTRODUCTION

The IVSAWS System Architecture Analysis (task C, sub-task 1) yielded two promising system architectures that can implement IVSAWS at different levels of cost and functionality. System architecture number one employs a new narrowband communication link operating in the 220-MHz to 222-MHz band supported by Global Positioning System (GPS) area of coverage (AOC) control. System architecture number two utilizes existing FM radio stations to broadcast IVSAWS alerts via the Radio Broadcast Data System (RBDS). GPS or other geolocation systems (e.g., Position Information Navigation System (PINS) can be used to control the AOC.

This analysis presents the tradeoffs used to select the system architecture number one (narrowband-GPS) modulation scheme and analyzes several system performance parameters using the selected modulation scheme for rural, suburban, and urban driving environments. An evaluation of system architecture number two (RBDS) was considered as part of this analysis. However, a detailed communication performance analysis of system architecture number two (RBDS) was deemed unnecessary for the following reasons: (1) RBDS is already designed and standardized - therefore, a performance analysis would be redundant, and (2) experimental results derived from field tests currently being performed under other FHWA contracts will be more meaningful than estimates derived from analysis and simulation.[27]

MODULATION SELECTION

The system design for any digital communication system requires tradeoffs between the following parameters: (1) required bandwidth (W), (2) probability of bit error (Pb(e)), (3) energy consumed per bit transmission (Eb), and (4) cost of implementation (i.e., system complexity). The system architecture number one communication channel can be characterized as a fading narrowband channel (4 kHz) with additive white Gaussian noise (AWGN). Since bandwidth is very limited, maximization of bandwidth efficiency is a major design goal. On the other hand, minimization of required power is a lesser design goal since base station transmitters will be located at sites with plentiful power and a nationwide frequency allocation will be secured (e.g., no non-IVSAWS co-channel users). The design goals are prioritized as follows:

- First priority - maximize bandwidth efficiency.
- Second priority - minimize system cost (complexity).
- Third priority - minimize the probability of bit errors.
- Fourth priority - minimize required power.

Stated differently, the evaluation of the modulation scheme used to implement system architecture number one can be based upon the four parameters, Rs/W, Pb(e), implementation cost, and E_b/No (where Rs is channel bit rate, E_b is the energy per bit, and No is the noise power). The first parameter is a measure of the bandwidth required for a given source rate (bits/second per hertz), the second parameter is a performance target, the third parameter is a measure of system complexity, and the fourth parameter is a measure of the power expenditure.

Bandwidth Power Efficiency

Figure 69 compares several modulation schemes on a bandwidth power efficiency plane for a bit error probability $P_b(e) = 10^{-5}$. The numbers next to the symbols represent the modulation order for a given modulation scheme. The specified bit error probability is generally considered a reasonable design target for digital RF communication systems. The figure shows that ASK, PSK, MSK, and APSK modulations are bandwidth-efficient since they cover the region of the plane where Rs/W > 1. Conversely, FSK is a poor modulation selection for a bandwidth constrained system since it occupies the area of the plane where Rs/W < 1. It is also important to notice that for ASK, PSK, and APSK modulations, bandwidth efficiency tends to "flatten out" as the modulation order increases and ever-increasing amounts of power are required to achieve an incremental improvement in bandwidth efficiency. However, for little or no additional power,

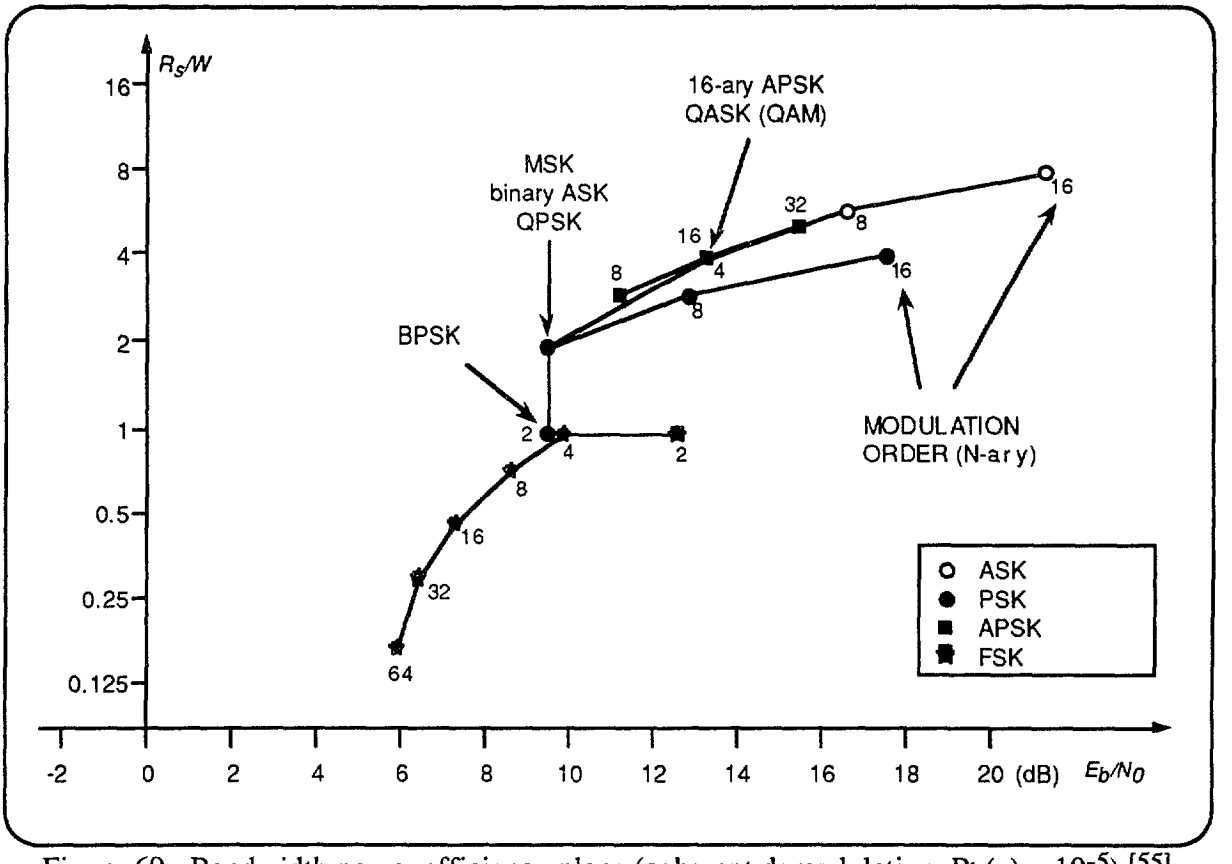

Figure 69. Bandwidth power efficiency plane (coherent demodulation, $P_b(e) = 10^{-5}$).[55]

substantial gains in Rs/W can be achieved as binary and quaternary systems are "upgraded" to the next higher modulation order. Note, in particular, that QPSK has twice the bandwidth efficiency as BPSK at the same energy (E_b) cost.

Ignoring system complexity, it is evident that binary ASK, QPSK, and MSK are prime modulation scheme candidates if bandwidth and power efficiencies are to be maximized simultaneously. Noting that system architecture number one places a premium on bandwidth efficiency, it can be argued that 8-ary APSK, 16-ary APSK, and 4-ary ASK (QAM) are also good candidates.

System Complexity (Cost)

Figure 70 shows the relative complexity of different modulation schemes. FSK is a very cost-effective modulation scheme when non-coherent detection is used. Conversely, the complexity of APSK receivers place the APSK waveforms at a cost disadvantage with respect to ASK, QPSK, and MSK waveforms. Also shown are the relative complexity of differentially encoded QPSK and differentially encoded MSK waveforms. Differentially encoded waveforms can substantially reduce system complexity since no coherent carrier recovery is required (however, additional Eb is required to maintain the same $P_b(e)$, ~ 2 dB for QPSK and MSK). Differentially encoded MSK and QPSK modulation schemes are of similar complexity.

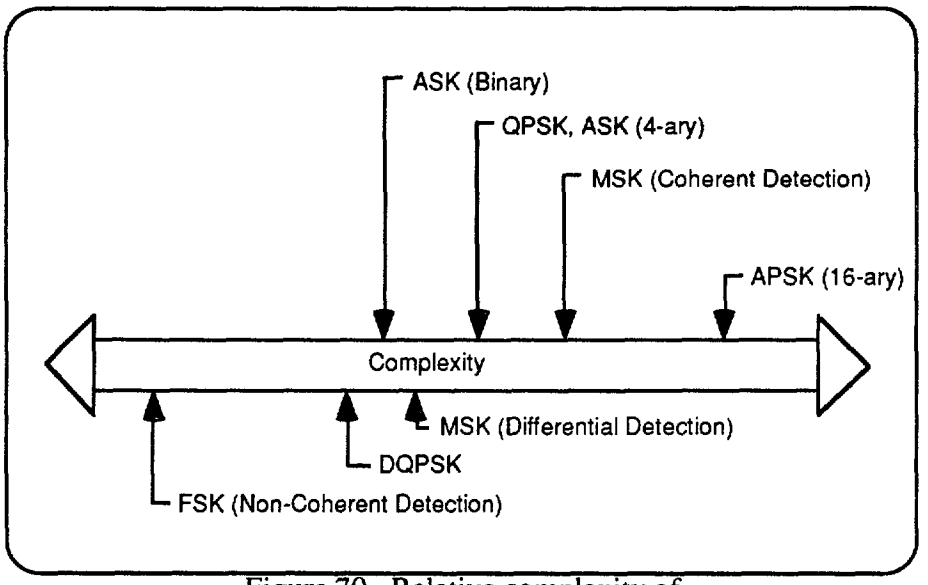

Figure 70. Relative complexity of candidate modulation schemes.[56]

The use of higher order ASK modulations will have a significant impact on transmitter complexity if, as expected, high-power amplifiers are used to transmit the waveform. The out-of-band spurs introduced by amplifier non-linearities are more difficult (and expensive) to reject as peak-to-average power and transmitter gain increase. For example, the peak-to-average power of 4-ary ASK is 2.11 dB, whereas elements of PSK signal sets are equal energy.

Performance in the Presence of Impulsive Noise

Field tests have shown that impulsive environmental (natural) noise is not a significant contributor to the composite environmental noise profile at frequencies above 100 MHz.[57] The channel noise can be characterized as AWGN in the 220-MHz to 222-MHz band. However, impulsive noise from manmade sources could corrupt individual symbols if the noise pulse width is long enough (> 100 μs). The most significant source of impulsive noise will be automobile ignition systems, which are in close proximity to the vehicular IVSAWS receivers. Data was obtained from General Motors on the RF characteristics of engine ignition noise. Each spark plug firing produces a 2-μs noise burst. This is substantially less than a bit period for links supporting data rates on the order of 5 to 10 kbps and, therefore, the effects of impulsive ignition noise on $P_b(e)$ can be ignored. For IVSAWS, the AWGN channel model is a better model than an impulsive noise channel model.

Performance in the Presence of Rayleigh Fading

In the IVSAWS environment, radio waves will reflect off many sources, including hills, roads, aircraft, and buildings. The primary effect of the reflections is the introduction of multi-path fading. Having non-direct wave components at reception, a case of Rayleigh fading, is the worst type of fade in the mobile communication environment. If the amplitudes of the reflected signals are nearly equal, a deep fade will occur and communication will be effectively blocked. The effect of Rayleigh fading is most pronounced in environments with a large number of reflectors (e.g., a city street packed with cars). With respect to the IVSAWS communication environment, Rayleigh fading will be most pronounced in: (1) urban areas, where tall buildings block a direct signal path from a base station transmitter and (2) during mobile broadcasts (due to low transmitter and receiver antenna elevation, blockage of the direct path between mobile IVSAWS transmitters and receivers can occur in all environments (urban, suburban, and rural)).

The Rayleigh cumulative probability distribution function given by

$$P(r \leq R) = 1 - \exp(R^2/\overline{r^2}) \qquad (1)$$

where r is the envelope of the fading signal, $\overline{r^2}$ is the average power of the fading signal, and R is the amplitude variation with respect to its RMS value $(\overline{r^2}^{1/2})$, $R = (r^2/\overline{r^2})^{1/2}$.

If the duration of a deep fade is sufficiently long, a string of bits will be "erased" from the bit stream, introducing a burst error. The use of interleavers and forward error correction (FEC) can be used to reduce the impact of burst errors. IVSAWS interleaver and FEC design are discussed later in this chapter. Analysis and experimentation has shown that at vehicle (receiver) speeds between 24.15 km/h and 128.8 km/h, the average duration of a fade 10 dB below the RMS signal level will range from 32 ms to 11 ms, respectively.[58] When the received IVSAWS signal power is near the receiver's sensitivity (e.g., when the receiver is just within communication range), the corresponding burst errors will range from 194 to 311 bits in duration. Figure 71 shows the probability of a fade occurring at a level deeper than 10 dB below its RMS value for a period greater than N bits.

The size of the fading region is proportional to wavelength. Also, vehicles traveling at higher speeds will move through the fading region more quickly, reducing the average fade duration. However, fades will occur more often at higher speeds.

Table 34 lists the performance of several modulation schemes on a Rayleigh fading channel. As can be seen, differential QPSK modulation requires twice as much bit energy to achieve the same performance as MSK, binary ASK, and 4-ary ASK modulations.

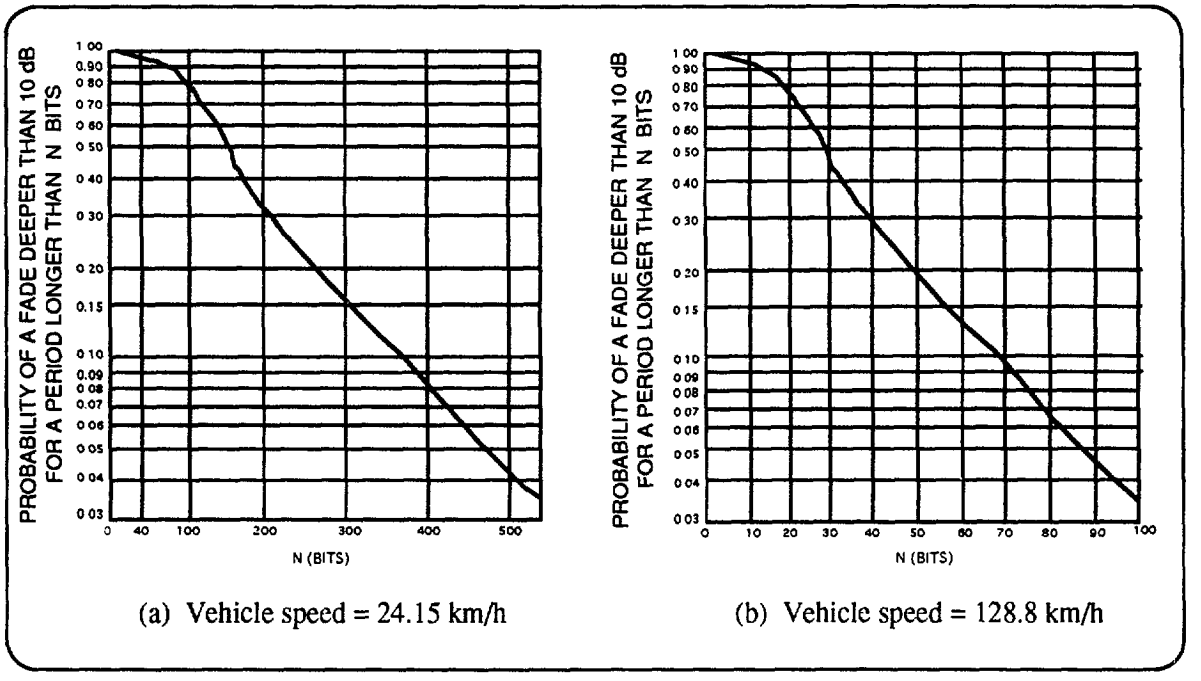

Figure 71. Rayleigh fading probability at 220 Mhz.

Table 34. Performance of candidate modulation schemes over a Rayleigh fading channel.[3]

Modulation Scheme	Average Eb/No (dB) required for $P_b(e) = 10^{-2}$
Binary ASK	17
4-ary ASK	17
MSK	17
QPSK	20
differentially coherent demodulation	

Rician Fading Environment

Rician fading occurs when direct and non-direct wave components combine at reception. Rician fading will dominate Rayleigh fading in the suburban and rural IVSAWS communication environment provided base station transmitters are elevated and a direct path exists between the transmitter and vehicular receivers. As mentioned previously, Rayleigh fading can be expected over the mobile-to-mobile IVSAWS channel, even in rural areas. The Rician cumulative probability distribution function is given by:

$$P(r \le R) = \int_0^{R_0} r_0 \exp\left(\frac{-r_0^2 + a_0^2}{2}\right) I_0(a_0 r_0)\, dr_0 \qquad (2)$$

where r and R are as defined in equation 1; I_0 is the modified Bessel function of zero order; a is the amplitude of the direct wave; and R_0, a_0, and r_0 are normalized parameters defined below as

$$R_0 = R/(\overline{r^2}/2)^{1/2},\ a_0 = a/(\overline{r^2}/2)^{1/2},\ \text{and}\ r_0 = r/(\overline{r^2}/2)^{1/2}.$$

When the ratio of the amplitude of the direct signal to the RMS amplitude of the composite signal ($a_0/\sqrt{2}$) is 1.5 dB, the probability that the received signal level is 11 dB below the RMS signal level is 0.01. Comparatively, from equation (1), the probability of a fade of the same depth over a Rayleigh fading channel is 0.23. Rician fades will be of shorter duration and less frequent than Rayleigh fades of equal depth.

Final Modulation Scheme Selection

Since bandwidth efficiency is the primary modulation scheme design goal, FSK modulations were eliminated as candidates for the IVSAWS since they are bandwidth-inefficient relative to PSK, MSK, and ASK waveforms. ASK, APSK, and high-order (> 4-ary) PSK modulations were rejected due to implementation complexity (cost). After this process of elimination, tradeoffs were performed between BPSK, QPSK, and MSK modulations. Though more complex, QPSK has twice the bandwidth power efficiency as BPSK. Thus, BPSK was eliminated, again due to the premium placed on bandwidth efficiency. Finally, QPSK and MSK were compared. MSK and QPSK occupy the same point on the bandwidth efficiency plane. When differentially coherent demodulation is used to reduce receiver complexity, MSK and QPSK modulations are also of similar complexity (cost). Evidence suggests that MSK has slightly better performance (~ 3 dB) than QPSK over a Rayleigh fading channel (see table 32). On the other hand, DQPSK has been adopted as the standard for the emerging U.S. digital cellular telephone system. Other American digital radio systems, such as RBDS, appear to be favoring QPSK modulation schemes. Thus, parts and test equipment availability may place a QPSK-based IVSAWS at a slight cost advantage with respect to a system using MSK. In short, MSK has a slight performance advantage, while QPSK has a slight cost advantage. Cost was considered to be the dominant factor and DQPSK was selected as the modulation scheme for the IVSAWS system architecture number one.

π/4-Shifted DQPSK

Modifications can be made to the DQPSK waveform in order to improve its bandwidth efficiency and reduce the cost of implementation. Raised-cosine filtering the in-phase and quadrature channels suppresses sidelobes and shapes the main lobe such that higher data rates (relative to unfiltered DQPSK) can be achieved while maintaining conformance to 220-MHz to 222-MHz band spectral emissions requirements. Assuming perfect symbol synchronization, raised-cosine filtering will not generate inter-symbol interference (ISI). Even without ISI, performance degradation does occur since: (1) the higher data rate reduces the energy per bit (assuming fixed ERP) and (2) pulse energy from the unfiltered full-response baseband waveform is diverted to construction of the partial-response baseband waveform "tails" that smooth the bit transitions and enhance spectral containment. The effect can be modeled as a reduction in E_b. Secondly, offsetting or shifting the I and Q channels by one symbol period creates a more uniform envelope with respect to QPSK (without performance degradation), thereby enabling the use of lower-cost RF amplifiers.

Figure 72 shows the simulated performance of the IVSAWS π/4-shifted DQPSK waveform over a static (non-fading) channel corrupted by AWGN. No equalization, FEC, or interleaving was applied. The model was constructed on a contractor signal-processing workstation. The purpose of the simulation was to determine the effects of baseband filtering on bit error rate performance

with respect to theoretical unfiltered DQPSK (differentially coherent demodulation). All simulation points fell within a ± 0.5-dB envelope of the unfiltered DQPSK performance. It appears that baseband filtering has a minimal effect on Bit Error Rate (BER) performance.

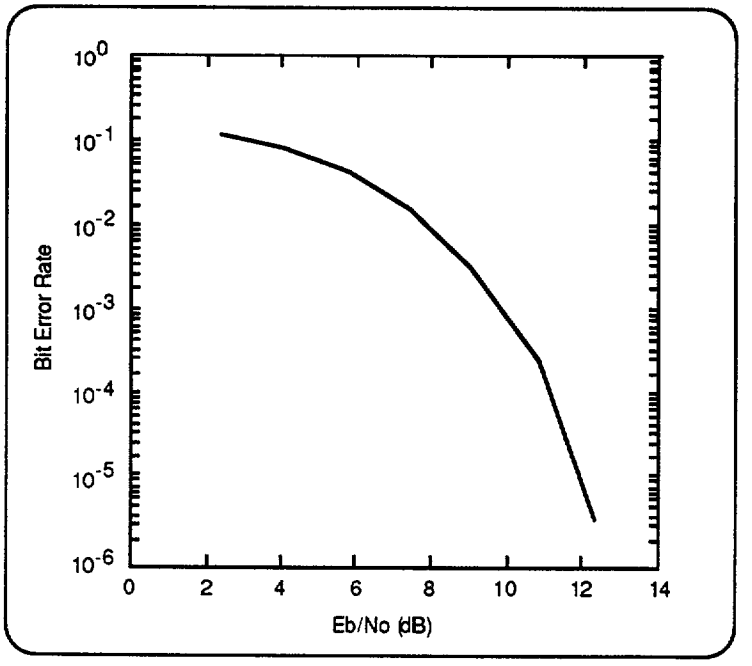

Figure 72. IVSAWS π/4-shifted DQPSK performance (differentially coherent demodulation).

PREAMBLE DESIGN AND PERFORMANCE

The primary function of the communication architecture is the reliable delivery of hazard warnings and alert messages. This notification process is facilitated by reliable digital communication from the IVSAWS operations center to the many motorist and deployment community vehicles. In order to demodulate the message data, the receiver must first detect the presence of the signal and acquire the message timing. The preamble is a special pattern placed at the beginning of each message to enable the receiver to detect the presence of a message. Preamble detectability in the presence of noise is balanced to the error correction protection of the message data.

Preamble design considers overall length, symbol selection, and performance in the presence of noise. Preamble length is a tradeoff between enhancing detectability at the cost of increased receiver complexity. Preamble symbols are selected to maximize auto-correlation functions so that delayed versions of the same signal in a multi-path environment do not confuse the receiver. The performance in the presence of noise is measured both by the probability of detection and the probability of false alarm. The probability of detection and false alarm are interrelated and depend on both the length of the preamble and the signal-to-noise ratio at the selected operating point.

Preamble Length

An important consideration in determining the appropriate preamble length is the potential use of the preamble to train an adaptive equalizer. Adaptive equalization can reduce the probability of

bit errors over land mobile (Rayleigh fading) channels. When used for adaptive equalization, the preamble has an optimum length that represents a tradeoff between wasting bandwidth in unnecessary training symbols and providing enough symbols for good channel impulse response estimation.

Several types of adaptive equalizers are candidates for implementation. However, implementation of an equalizer will not be required or recommended in the system description document. Rather, a waveform has been designed that can support several equalizers that use a known data sequence for training. Equalizers examined include: (1) tap delay line (TDL), (2) decision feedback equalization (DFE), and (3) lattice equalizers.

Research indicates that between 5 percent and 10 percent of the available bandwidth should be reserved for equalizer training in fast flat Rayleigh fading channels in which the ratio of Doppler spread to the symbol rate (f_d/f_s) is below 0.05 (corresponding to a vehicle traveling under 201.25 km/h, f_s = 3037.5 symbols/s).[60] A 28-bit (14-symbol) preamble was selected that consumes 7 percent of the available bandwidth.

Auto-Correlation Function

The preamble selected corresponds to the following sequence of baseband phase changes: $-\pi/4$ $-\pi/4$ $-\pi/4$ $3\pi/4$ $\pi/4$ $3\pi/4$ $-3\pi/4$ $3\pi/4$ $-3\pi/4$ $-\pi/4$ $3\pi/4$ $\pi/4$ $-\pi/4$ $-\pi/4$. A polar plot of the preamble auto correlation function, $R_{XX}(\tau)$, is shown in figure 73. As can be seen from the figure, the magnitude of the function is near zero at time shifts within ±3 symbols of τ = 0. Thus, if the IVSAWS receiver clock does not drift more than three symbols (~ 1 ms) between message receptions, a low probability of false alarm and a high probability of synchronization can be maintained since an optimized threshold can be selected due to good auto-correlation character near $\tau = 0$. The GPS subsystem embedded into system architecture number one provides a once per second time mark accurate to within ±100 ns, and will, therefore, provide an excellent time reference. A receiver clock accurate to within 10 parts per million could also be used as a time reference provided that messages are received at least once every 100 s. Such a clock could also be used to maintain system time during periods in which the GPS signal "drops out" due to blockage or multi-path. Completely asynchronous signal acquisition is, of course, possible; however, the phase between the received signal and synchronization sequence will need to be monitored in order to ensure proper time alignment since the auto-correlation function magnitude is unity at three points.

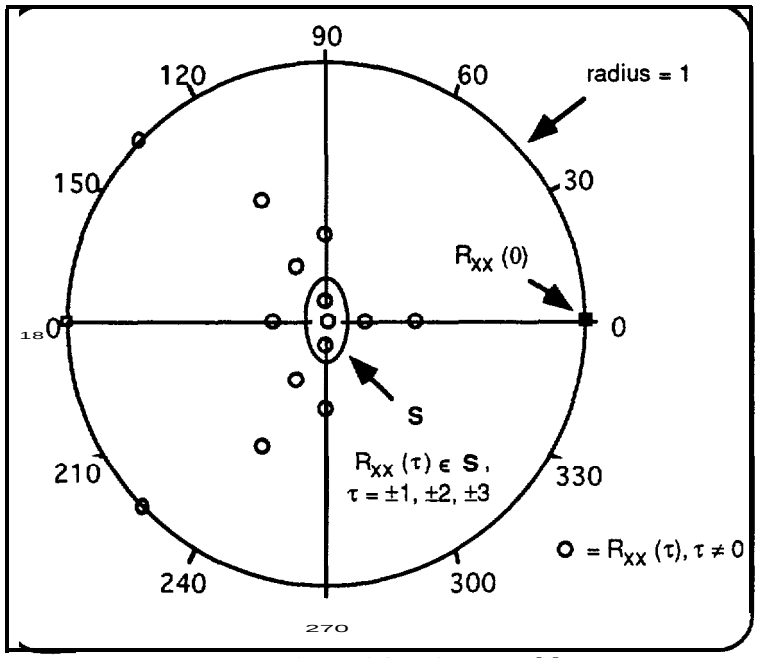

Figure 73. IVSAWS preamble
auto-conelation function.

Probability of Detection and Probability of False Alarm

Preamble design consists of balancing the “strength” of the preamble to the “strength” of the message data. The special preamble pattern is detected using a correlator. The correlator is essentially measuring the presence of energy. When sufficient energy is detected, the correlator declares the presence of a message and then other portions of the receiver demodulate the data. A long preamble makes it easier for the correlator to detect the preamble. However, the correlator and synchronization circuitry are the most expensive portions of any digital receiver. For cost reasons, the preamble should be as short as possible. The tradeoff between long and short is relative to the message data. If the preamble is stronger than the message data, then the receiver can detect the preamble, but cannot demodulate the message data. If the preamble is weaker than the message data, then the receiver does not detect the presence of a message even though the receiver could demodulate the data. For a safety system, such as IVSAWS, the preamble length may be increased beyond this minimum length in order to provide a sufficient guarantee that reliable message detection always occurs. The following analysis shows that the selected 14-symbol preamble achieves a worst-case performance (at the minimum signal levels) equivalent to a probability of detection of 99 percent with a false alarm rate that is less than 1 in 100,000 opportunities. At signal strengths better than the absolute minimum, the probability of detection is significantly increased and the probability of false alarm is significantly decreased.

In digital communication systems, a standard operating point for voice is a 10^{-3} bit error rate and for data is a 10^{-5} bit error rate. As a safety system, a 10^{-11} bit error rate for an operating point is a more stringent design point. As discussed in subsequent sections, at this 10^{-11} bit error rate operating point, the required signal level, Eb/No, for proper demodulation is 12.5 dB for the QPSK modulation. Furthermore, with the selected half-rate convolutional code combined with the QPSK modulation, at this 10^{-11} bit error rate operating point, the required signal level (Eb/No) for proper demodulation is 7.0 dB. Thus, the coding gain between the coded and uncoded data is 5.5 dB. If the signal strength is greater than 7.0 dB, then the error rate in the

data will be significantly less, thus ensuring error-free transmission. The preamble to data balance computation uses this worst-case operating point to determine the minimum guaranteed performance.

The information for determining preamble performance comes from the design of radar signals, which is strictly an energy-detection problem. Several factors are combined to determine the effective preamble signal-to-noise ratio. The probability of detection and probability of false alarms are then functions of this effective signal-to-noise ratio. Generally, the desired probability of detection is specified and then the associated probability of a false alarm is ascertained from available graphs.

The minimum threshold at which the digital data is demodulated is at 7.0 dB and hence the preamble pulses in the message will also be at this signal strength. To detect the presence of such a message, the energy in preamble pulses are combined to produce the effect of one "high-energy" pulse that would be easily detected. The designed preamble has a length of 14 symbols, which is 11.411 dB in length. Combining 14 pulses to create the effect of 1 strong pulse is a losses process. From figure 74, combining 10 to 25 pulses at a 7.0-dB signal-to-noise ratio results in 3 to 4 dB of losses. Also, since preamble timing is not yet refined, pulse sampling can be off the peaks by nearly half power, so 2.0 dB of timing losses are also budgeted. Hence, the resulting energy differential that the preamble length provides after implementation losses is 11.411 dB. This preamble energy differential is combined with the demodulation threshold of 7.0 dB to produce the effective preamble signal level of 13.411 dB.

Figure 75 presents the probability of detection and probability of false alarm as a function of the effective preamble signal level. The communication system must be robust so that messages are not missed. An appropriate preamble operating point for robustness is that the probability of detection is 0.99. With a 13.411-dB signal level and 0.99 probability of detection, the resulting probability of false alarm is 10^{-5}, which represents, at most, one false alarm in 100,000 reception opportunities. Such false signals are then rejected by the error correction and detection codes in the message signal processing.

COVERAGE

The coverage of the base station transmissions will have a significant impact on IVSAWS infrastructure cost. If base station-vehicular receiver links can be maintained over longer distances, the density of base stations can be reduced. Over flat terrain, extending the communication range by a factor of 2.5 will reduce the required base station density by a factor of 7. Since IVSAWS is focused on the vast rural transportation environment, significant savings can be achieved by extending the IVSAWS communication range.

Coverage is a lesser issue with respect to transmissions from mobile units. The original IVSAWS task C report showed that a driver alert distance of 1.2 km is sufficient for drivers to detect and understand the IVSAWS alert, select and initiate a warning response, and complete the hazard avoidance maneuver (heavy truck traveling at 128.8 km/h, full stop required). Thus, a 1.2 km communication range is sufficient for mobile broadcasts. Since mobile transmitters use a slotted ALOHA time-division multiple-access (TDMA) protocol, coverage that significantly exceeds this range is undesirable since mobile transmitters located far from a given vehicular receiver will compete for time slots with nearby mobile units that pose a real hazard to the driver. Mobile unit throughput is examined later in this chapter. IVSAWS communication range is a function of: (1) transmitter power, (2) receiver sensitivity, (3) demodulation threshold (E_b/N_0)

required for a specified performance (BER), (4) noise level at the receiver, and (5) path loss, including the effects of fading.

Transmitter Power

In the 220-MHz to 222-MHz band, the effective radiated power (ERP) for base stations is limited to 500 W for antenna heights above average terrain (HAAT) up to 150 m. The allowed ERP decreases for HAAT's greater than 150 m. Above 1050 m, the maximum ERP is 5 W. These power restrictions will not permit an affordable IVSAWS implementation due to the number of base stations that would be required to provide adequate rural coverage. However, since IVSAWS will operate without co-channel users (nationwide frequency allocation), it is anticipated that an exemption to the restrictions can be secured provided out-of-band emissions do not exceed the limits specified in the FCC rules using the specified ERP limits. The communication range analysis made herein assumes a base station ERP of 500 W at all antenna heights. Mobile IVSAWS transmitters are restricted to an ERP less than or equal to 50 W.

Receiver Sensitivity

With an input signal power of -110 dBm (direct coupling), the invehicle IVSAWS receivers are assumed to maintain a BER of 1×10^{-5} without FEC.

Demodulation Threshold (E_b/N_0)

In order for the soft decision Viterbi decoder used in the IVSAWS receiver to operate effectively, the BER before the decoder needs to be below 5×10^{-2}. Figure 77 shows the output BER as a function of the channel (input) BER for a hard decision Viterbi decoder. In order to maintain an output BER of 1×10^{-5} (Message Error Rate (MER = 4×10^{-3})), the channel BER must be less than 2.5×10^{-2}. Figure 76 shows channel BER as a function of E_b/N_0 over a Rayleigh fading channel using DQPSK. An E_b/N_0 of 13 dB is required to maintain a 2.5×10^{-2} channel BER. An eight-level soft decision decoder requires 2 dB less energy per bit to maintain the same BER.[62] Thus, the required demodulation threshold over a Rayleigh fading channel using 3-bit soft decision Viterbi decoding is 11 dB.

Stated differently, over a Rayleigh fading channel, the demodulation of a DQPSK waveform received at a level 11 dB above the noise floor will produce a channel BER of -3.5×10^{-2}. A 3-bit soft decision Viterbi decoder will then reduce the BER to 1×10^{-5}.

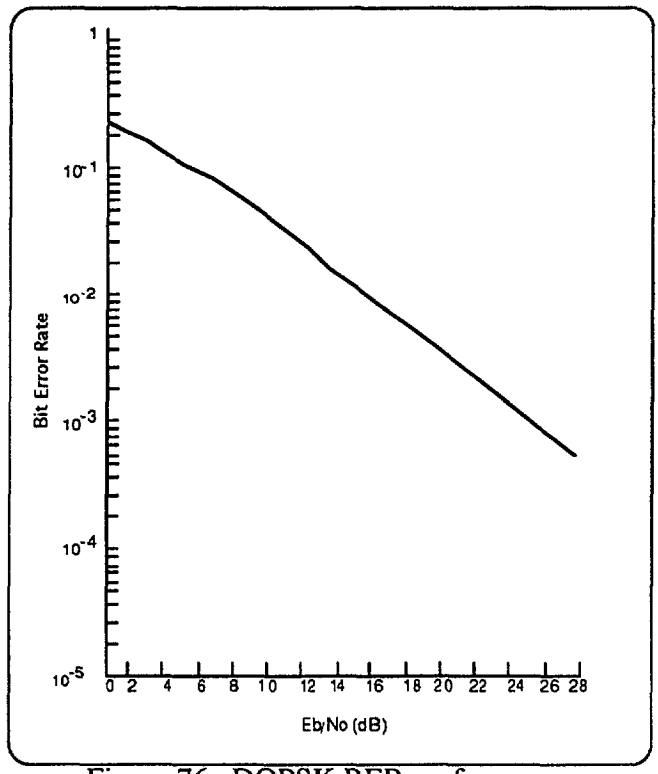

Figure 76. DQPSK BER performance over a Rayleigh fading channel.

Noise Level

At 220 MHz, ignition noise will dominate other sources of natural and environmental noise.[62] Vehicular IVSAWS radios will receive noise from the vehicle in which it is installed and from ignition systems of nearby vehicles. The composite noise level is a function of the traffic density. Table 35 lists the noise level above kT_0B for various traffic flows. A rate of 100 cars/h is considered light traffic and will be used as a baseline for the rural transportation environment. The urban and suburban noise levels will be based upon a traffic flow of 1000 and 500 cars/h, respectively.

Table 35. Noise power at receiver.

Environment	Traffic flow (cars/hour)	Noise level above kT_0B (dB)	Noise power at receiver (dBm)
rural	100	20	-118
suburban	500	28	-110
urban	1000	35	-103

The noise power at the receiver was calculated by summing each member of the third column with a calculated kT_0B. The thermal noise at room temperature (T_0 = 290 °K), with an IVSAWS receiver noise bandwidth of 4 kHz, is about -138 dBm. The different noise levels show that higher received signal levels are required to maintain the same BER performance in urban environments. Since IVSAWS base station ERP is limited, noise alone will reduce urban

IVSAWS communication range with respect to suburban and rural deployments. The received signal power (Pr) required to obtain an 1 1-dB E_b/N_0 can be derived by

$$SNR = P_r/(N_0B) = (E_b/N_0)(R/B) = 11\ dB + 10\ \log(R/B) = 11\ dB + 10\ \log(\ 11075/4000) = 13\ dB$$

where R is the bit rate and B is the receiver noise bandwidth. Thus,

Pr(threshold) =

$$13dB+N_0B= \begin{cases} \text{-90 dBm (urban)} \\ \text{-97 dBm (suburban)} \\ \text{-105 dBm (rural)} \end{cases}$$

Substantially higher received signal power is required to maintain performance in the urban environment. Since base station and mobile transmitter transmission power limits are geographically uniform (no exception for transmitters in urban areas), the effect of urban noise will be reduced communication range with respect to ranges achievable in rural and suburban environments. Thus, higher urban base station density is required to provide uninterrupted communication coverage.

Path Loss

The Hughes Aircraft Company Extended Longley-Rice (ELR) model was used to calculate path loss and the resulting communication range over a set of candidate IVSAWS communication links. The purpose of the ELR model is to provide a means of computing propagation attenuation based on the siting of transmitting and receiving units. It combines the propagation attenuations attributable to: (1) terrain irregularity, (2) free space, (3) vegetation, and (4) climate. The Extended Longley-Rice (ELR) model is useful in the frequency range of 20 MHz to 20,000 MHz. There are two modes. The point-to-point mode is extremely detailed, and incorporates terrain and foliage information for simulation of propagation attenuation along specific paths. The area mode requires less detailed data input, does not account for foliage losses, and provides a statistical representation of expected propagation attenuation. The area mode was used to predict IVSAWS path losses.

ELR Capabilities Overview

The ELR model has the embedded capability to differentiate among three modes of electromagnetic propagation: (1) line-of-sight, (2) diffraction, and (3) scattering. By computing the distance from a sited unit to the horizon and computing the angle of the transmission ray from that unit to a normal line at the horizon, the ELR program computes parameters for making a determination of the mode of electromagnetic wave propagation, which has the smallest signal attenuation. This continuous curve of attenuation as a function of distance represents a reference attenuation to be expected at each distance over homogeneous terrain within the specified area.

If the terrain varies widely in character within the desired area of profile, then greater variability about this median must be expected. Also, if the antennas are sited in extreme (rather than typical) locations, the calculated attenuation will not represent the median of measurements. Terrain irregularities are represented by a single terrain parameter, Ah, which represents terrain roughness as a statistical variation in terrain height. This parameter is used to determine the median terrain effects in the specified area.

General Description

An indepth discussion of the Longley-Rice attenuation model is beyond the scope of this report. (For more details, see reference 62.) The following description provides a summary of the processing and parameters that characterize the model as they apply to IVSAWS communication links.

The area mode of the ELR propagation attenuation model depends on a minimum number of parameters: (1) system parameters — frequency, antenna heights, and distance; (2) environmental parameters, such as atmospheric characteristics; and (3) terrain parameter, Ah.

Given these inputs, the propagation loss subroutines first compute a reference attenuation, which is a continuous function of distance. This function is defined in three regions, called the line-of-sight, diffraction, and forward scatter regions. In the line-of-sight region, the bulge of the earth does not interrupt the direct radio ray, but hills and other obstructions may do so. In other words, this region extends to the smooth earth horizon, which may be farther from the transmitter than

the actual horizon. In the diffraction region, the reference attenuation is a weighted average of knife-edge and smooth-earth diffraction. The weight used here is a function of terrain type, radio frequency, and antenna heights. And finally, at greater distances, the reference attenuation is based on forward scatter computations.

The ERL model does not include the effects of suburban or urban surroundings. To compensate, urban and suburban corrections were added to the free-space path loss and terrain loss predictions. The power (P_r) of a received signal can be expressed as

$$P_r = P_{r0}\,(r/1.61\text{ km})^{-\gamma}\,(f/900\text{ MHz})^{-n}\,\alpha_0 \qquad (3)$$

where P_{r0} is the power 1.61 km away from the emitter; r is the distance in kilometers; γ is the path loss slope; f is frequency in MHz; and α_0 accounts for the effects of transmitter power, transmitter and receiver antenna heights, and transmitter and receiver antenna gains. Experimental results show that for frequencies below 450 MHz, n does not vary significantly and can be considered a constant. The excess urban/suburban path loss with respect to open (rural) terrain can be found by normalizing the urban and suburban P_r with respect to the rural value.

$$\frac{P_{r\,(\text{urban/suburban})}}{P_{r\,(\text{rural})}} = \frac{P_{r0\,(\text{urban/suburban})}\,(r/1.61\text{ km})^{-\gamma\,(\text{urban/suburban})}\,(f/900\text{ MHz})^{-n}\,\alpha_0}{P_{r0\,(\text{rural})}\,(r/1.61\text{ km})^{-\gamma\,(\text{rural})}\,(f/900\text{ MHz})^{-n}\,\alpha_0}$$

$$\frac{P_{r\,(\text{urban/suburban})}}{P_{r\,(\text{rural})}} = \frac{P_{r0\,(\text{urban/suburban})}\,(r/1.61\text{ km})^{-\gamma\,(\text{urban/suburban})}}{P_{r0\,(\text{rural})}\,(r/1.61\text{ km})^{-\gamma\,(\text{rural})}}$$

Substituting values derived from empirical data yield the following urban and suburban path-loss corrections:[58]

$$\frac{P_{r\,(\text{urban})}}{P_{r\,(\text{rural})}} = \frac{4.0 \times 10^{-7}\text{ mW}\,(r/1.11\text{ km})^{-4.31}}{1.3 \times 10^{-5}\text{ mW}\,(r/1.11\text{ km})^{-4.35}} \cong -15\text{ dBm} \qquad (4)$$

$$\frac{P_{r\,(\text{suburban})}}{P_{r\,(\text{rural})}} = \frac{11.8 \times 10^{-7}\text{ mW}\,(r/1.11\text{km})^{-3.84}}{1.3 \times 10^{-5}\text{ mW}\,(r/1.11\text{ km})^{-4.35}} \cong -13\text{ dBm} + 5\log(r/1.11\text{ km}) \qquad (5)$$

With respect to communication in an open area, the effect of the excess urban/suburban path loss is reduced communication range in urban and suburban environments due to a limited IVSAWS transmitter ERR. This effect compounds reduced range due to higher noise levels.

Input Parameters

The ELR model requires input of system and environmental parameters, which are described in this section. Table 37 lists the values used to predict path losses over IVSAWS communication links.

The following three system parameters must be supplied:

Frequency

The Frequency is f, in MHz (the model is designed for a range of values from 20 MHz to 20,000 MHZ).

Structural Antenna Heights

The heights are h_{e1} and h_{e2}, in meters (the effective height of each antenna above its immediate foreground). This is usually the height of the radiation center above ground; however, it may include the height of a building or cliff if the antenna is near the edge of a roof or a steep hill. Structural antenna heights are limited to the range of 1 m to 3000 m.

Unit Position/Locations

Unit position/locations, X and Y, are in degrees latitude and longitude (the distance (d) separating units is computed using the unit position/location and absolute height above sea level (terrain height plus antenna height)). Distance is treated as a variable in the ELR model, which is designed to operate in the range of 0.5 km to 1000 km. The lower limit is to avoid computing so-called “near field” effects. The upper limit is beyond usable conditions. Over highly irregular terrain, calculated values of transmission loss for distances from 0.5 km to 5 km are usually less reliable than those for greater distances. This is largely due to the difficulty in predicting the mixture of line-of-sight and trans-horizon paths at short ranges.

The environmental input parameters are:

Terrain Parameter

The terrain parameter is Ah, in meters (this single parameter is used to characterize terrain irregularity when operating in the area mode). Ah is the height difference between terrain heights above and below a straight line fitted to elevations above sea level at fixed distances.

Surface Refractivity

Surface refractivity is Ns, in N-units (the model uses the minimum monthly mean value of surface refractivity). The computations are not highly sensitive to changes in Ns. Except for the longer paths (100 km or more in length), differences of 5 or 10 N-units cause less than a decibel difference in the calculated attenuation. The refractive index gradient is used to predict a long-term median value of transmission loss. This surface gradient largely determines the amount a radio ray is bent, or refracted, as it passes through the atmosphere. In this model, an effective earth’s radius, a, is defined as a function of the surface refractivity gradient or the mean surface refractivity, Ns. This permits a straight ray assumption within the first kilometer above the

earth's surface. At much higher elevations, the effective earth's radius assumption overcorrects for the amount the ray is refracted and may lead to serious errors. Minimum monthly mean values of Ns are used to characterize reference atmospheric conditions. Since such values are less apt to be influenced by temporary anomalies such as super-refraction or sub-refraction, they provide a rather stable reference.

Climate

Climate is indicated by a code (to calculate variability in time, a climate type is indicated, which is identified by the numbers I to 7). These numbers correspond to the seven radio climates defined by the CCIR (1974B). If the climate is unspecified, climate five, the continental temperate value, is assumed. For short paths like those in a land-mobile service, the variability in time is much less than that from path-to-path.

The remaining input parameters are the polarization of the radiated waves and the electrical ground constants. At frequencies above 100 MHz for propagation over land, these parameters have little significance.

Terrain Parameter

In VHF and UHF propagation over irregular terrain near the earth's surface, a number of parameters are important. For trans-horizon paths, the most important of these parameters appears to be the angular distance, θ. For within-the-horizon paths, the clearance of a radio ray above the terrain between terminals is one of the most important factors. Considering terrain effects, only the terrain along the great circle path between terminals is needed. The angular distance, θ, is then defined as the angle in the great circle plane between the radio horizon rays between the transmitting and the receiving antennas. The angular distance, θ, is positive for trans-horizon paths, zero at grazing incidence, and negative for line-of-sight paths. In the area mode, specific path profiles are not available, and these terrain parameters must be estimated from knowledge of the statistical character of the terrain involved. In a study of a large number of terrain profiles, the Ah(d) of terrain above and below a straight line fitted by least squares to the altitudes above sea level was calculated. It was observed that for a large number of profiles of different lengths in a given area, the median values of Ah(d) increase with path length to an asymptotic value, Ah. This value was then used to characterize terrain. At any desired distance, d, the value of Ah(d) is determined by:

$$Ah(d) = Ah\,(1 - 0.8\,\exp(-0.02d))\ \text{meters} \qquad (6)$$

where Ah(d) and Ah are expressed in meters, and d is in kilometers.

It should be noted that this definition of Ah differs from the one used by the International Radio Consultative Committee and the FCC. Their definition of Ah is the height difference of elevations above sea level in the range of 10 to 50 km from the transmitter. In the homogeneous terrain, the values of Ah(d) measured over a large number of paths agree with those calculated using the relationship in equation 6. Where the terrain is not homogeneous, a wide scatter of values occurs, and the estimated value of Ah(d) may not represent a true median at each distance. In such circumstances, different sectors of an area may be considered and a Ah(d) can be predicted for each sector. An example of this would be an area that includes plains, foothills, and mountains. In this ELR area mode, a uniformly homogeneous area is assumed and therefore a single value of Ah is input into the program. A major problem is that the area of interest is rarely homogeneously irregular. In such a situation, judgment must be exercised in selecting paths that will be representative of those that will actually be used in a proposed deployment.

For example, if the desired paths will always be along or across valleys, do not choose terrain profiles that cross the highest mountains.

Some qualitative descriptions of terrain and associated ranges of Ah are listed in table 36.

Table 36. Terrain descriptions.

Terrain Description	Ah (meters)
Water or very smooth plains	0-5
Smooth plains	5-20
Slightly rolling plains	20-40
Rolling plains	40-80
Hills	80-150
Mountains	150-300
Rugged mountains	300-700
Extremely rugged mountains	>700

The area mode depends heavily on the parameter Ah. Whether or not a better estimate is needed, based on computed values, depends on the sensitivity of the predicted values of transmission loss to changes in Ah. This sensitivity is quite complicated, depending on the value of Ah itself, antenna heights, distance range, siting criteria, and radio frequency.

Communication Range

The ELR model was executed repetitively in order to determine base station and mobile unit communication ranges in urban, suburban, and rural settings. Excess urban and suburban path losses (given by equation 4 and equation 5) were added to the calculated free-space and terrain path-loss values. The transmitter and receiver positions were adjusted until an 1 I-dB E_b/N_0 was achieved for each combination of setting, terrain, and transmitter type. Table 37 lists the parameter values selected for the model. Figure 78 shows the predicted IVSAWS base station and mobile unit communication ranges.

Table 37. Extended Longley-Rice model parameters.

Climate Code	continental temperate
Ground Conductivity	0.13×10^{-2} siemens/meter
Ground Dielectric Constant	7 (average ground)
Surface Refractivity	301 N-units
Effective Antenna Height	
Base Station Transmitter	200-800 meters
Mobile Transmitter	1.5 meters
Mobile Receiver	1.5 meters
Radiated Power	
Base Station Transmitter	500 watts
Mobile Transmitter	50 watts
Antenna Gain (maximum)	
Base Station Transmitter	6dB
Mobile Transmitter	0 dB
Mobile Receiver	0 dB
Antenna Type	
Base Station Transmitter	l/2 wave dipole
Mobile Transmitter	l/4 wave whip
Mobile Receiver	l/4 wave whip
Carrier Frequency	221 MHz
System Altitude	300 meters
Terrain Roughness	
Plains	30 meters
Hills	90 meters
Mountains	200 meters

For figure 78, base station antenna heights given are above average terrain elevation. Mobile unit antenna height is fixed at 1.5 m.

FEC PERFORMANCE

Table 38 lists the E_b/N_0 required to maintain a 1 x 10^{-5} decoder output BER using different half-rate coding schemes.

Table 38. Performance of selected half-rate codes.

Coding Scheme	Average E_b/N_0 (dB) required for Pb(e) = 10^{-5} (DQPSK)
Constraint length 7 convolutional encoding soft-decision Viterbi decoding (8-level quantization)	7.5
Golay (24, 12)	10
Reed-Solomon (31, 15, 8)	11
Hamming (7, 4)	11.4
BCH (127, 64, 10)	13

Due to its superior performance, a half-rate constraint-length 7 convolutional code was selected. The additional coding gain (e.g., 3 dB with respect to Golay) will extend the IVSAWS communication range beyond that achievable using the other codes listed. The soft-decision decoding is more complex than the other codes examined; however, at the IVSAWS data rate (6075 bps), software implementation is possible using standard processors. Additionally, the performance of the Viterbi algorithm is known to degrade significantly in the presence of burst errors. Thus, interleaving is recommended in order to reduce the impact of burst errors introduced by Rayleigh and Rician fading.

INTERLEAVER PERFORMANCE

The IVSAWS waveform employs uniform interleaving. The 26 x 14 bit de-interleaver will distribute a burst error up to 7 symbols (14 bits) long uniformly throughout a 364-bit message (BER = 3.8 x 10^{-2}). Since the soft-decision Viterbi decoder performs poorly at BER's greater than 5 x 10^{-2}, the interleaver is roughly matched to the decoder. That is, increasing the depth of the interleaver (e.g., 19 x 19) will not improve BER performance. The 26 x 14 structure was selected and since the IVSAWS message is actually 366 bits long, the two "extra" bits can be supported by extending a single column by two bits. Other structures seemed to lead to awkward implementations.

Figure 71 shows that at low vehicle speeds, Rayleigh fading can destroy an entire message, not just a few bits of a message. Under these circumstances, interleaving will not improve performance unless data spanning several messages is interleaved. For mobile IVSAWS units, this is not a viable solution since transmissions only occur once every 3 s; interleaving several messages would extend the message decoding over a period of time longer than the recommended driver alert distance interval. Adaptive channel equalization is a better solution

for mobile broadcasts exposed to Rayleigh fading. Even without multi-message interleaving, interleaving will improve Viterbi decoder performance under Rician fading conditions since the average fade duration is less than that which occurs during Rayleigh fading.

BASE STATION DIVERSITY

A combination of frequency and time diversity is used to ensure that a sufficient number of base station transmitters can operate in the same area of communication coverage without introducing message collisions. On each of the two IVSAWS operating frequencies, base stations are allocated two of the three available slots, resulting in a total of four non-interfering channels. Figure 79 shows than four channels are sufficient, even over smooth terrain in which no geographical structures are present to attenuate interfering signals, provided the co-channel signal to interference ratio (S/I) is above the threshold required for acceptable performance.

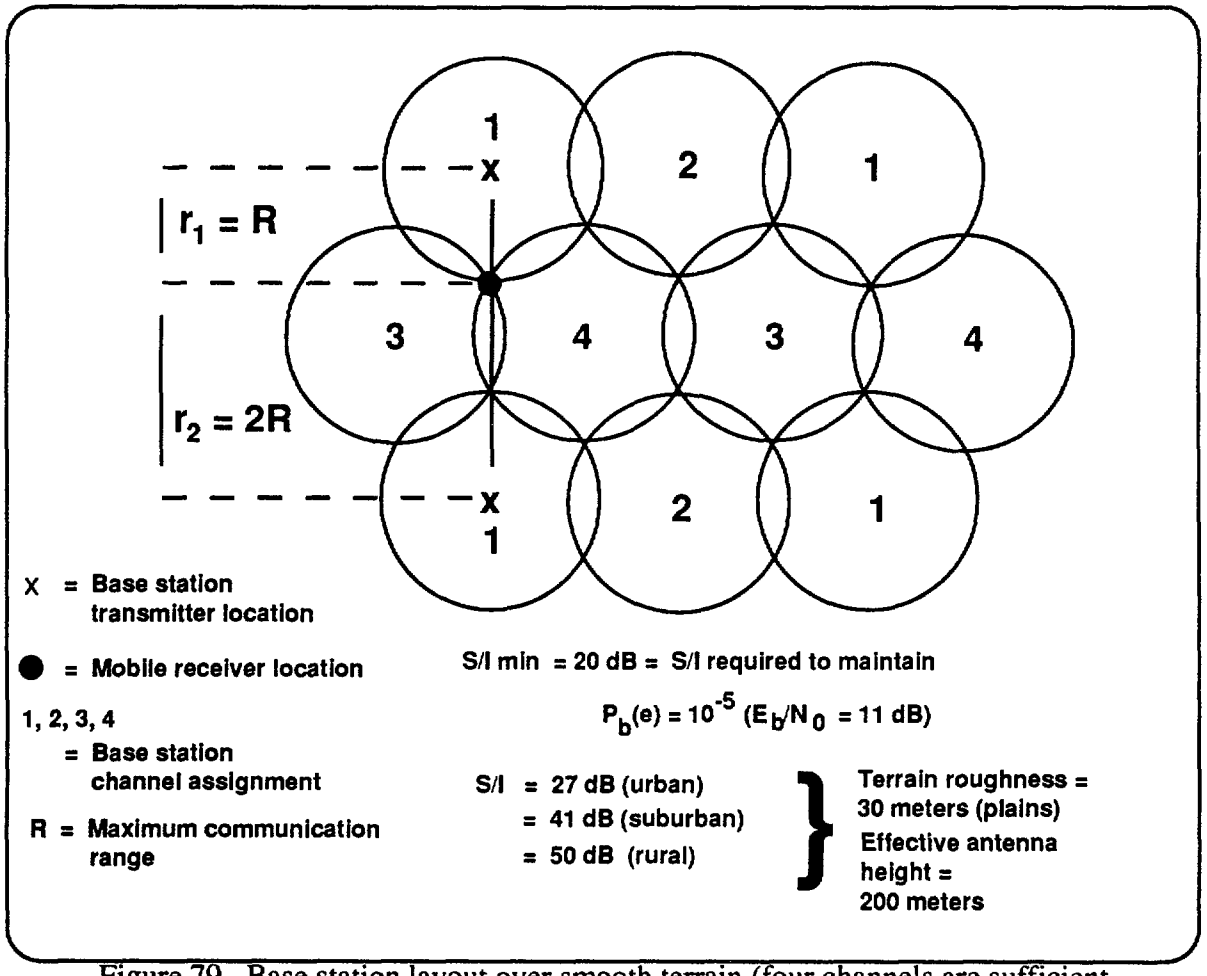

Figure 79. Base station layout over smooth terrain (four channels are sufficient to provide continuous coverage while maintaining an acceptable co-channel signal-to-interference (S/I) margin).

In order to maintain a BER of 1 x 10^{-5}, the signal-to-noise interference ratio (S/I) should be greater than 20 dB.[55] ELR model results indicate that when a receiver is at the edge of a base station's communication range, under worst-case conditions, the nearest co-channel base station transmitter signal is 27 dB lower than the desired signal (S/I = 27 dB). Worst case corresponds to transmission over plains in an urban environment. As communication range increases in suburban and rural environments, the base station transmitters can be placed farther apart and the curvature of the earth begins to attenuate the interfering signal due to the line-of-sight nature of 220-MHz communication.

It should be noted that more than one co-channel base station has the potential of interfering with the desired signal. However, the next nearest co-channel base station is almost twice as far away and the resulting interference level can be ignored, again due to earth curvature effects.

MOBILE UNIT DIVERSITY

Each active mobile unit transmits an alert once every three frames using a slotted ALOHA protocol. At most, 10 mobile alerts can be broadcast each frame. Thus, every 3 s, the transmitter randomly selects 1 of 30 available alert transmission periods. Occasionally, two or more mobile transmitters within communication range of the same receiver will select the same transmission time and frequency, resulting in the reception of a garbled message. The waveform design must be robust enough such that with a reasonable number of transmitters within communication range of the same receiver, the probability of collision is within limits. Two scenarios were considered:

Scenario One

A single roadway hazard event occurs (e.g., accident site) with multiple IVSAWS-equipped emergency vehicles responding. All vehicles are parked near the hazard with transmitters activated. In this situation, it is sufficient that a single alert be broadcast without collision once every 6 s (6 s corresponds to the minimum driver alert distance for vehicles traveling at high speeds). Assuming 20 active transmitters, what is the probability that at least 1 message is transmitted without collision during a 3-frame segment? Simulation results show that the probability is greater than 0.9999.

The simulation results show that the IVSAWS slotted ALOHA structure can easily support situations in which multiple emergency vehicles have responded to the same event. It should be noted that this scenario is not expected to be a normal IVSAWS operational mode. Vehicles are expected to be equipped with devices that automatically deactivate IVSAWS transmitters as the response personnel exit their vehicles. Prior to departure, the response personnel will call the hazard location and description into an IVSAWS operations center (IOC) that will then project a single warning zone around the hazard site via a base station transmitter. This process will minimize driver irritation caused by the reception of multiple alerts from a single hazard event.

Scenario Two

Five distinct emergency response vehicles are in transit to five different events within communication range of the same receiver. What is the probability of all five vehicles transmitting an alert, without collision, during the same three-frame segment? The probability is 0.70. What is the probability of a given vehicle transmitting a message that collides with the transmission from one or more other vehicles during the same three-frame segment? The

probability is 0.13. What is the probability of a given vehicle transmitting a message that collides with the transmission from one or more other vehicles during two successive three-frame segments? The probability is 0.02.

The simulation results show that with high probability (0.98), each vehicle will transmit an alert without collision every 6 s. The analysis is worst case in the sense that it assumes message collisions are completely destructive. However, in many cases, the transmission from a vehicle that is significantly closer to a receiver than other transmitters that are within communication range will dominate the collision process. In these cases, the alert from the nearest vehicle will be not be garbled. Moving hazards that are closer to a given vehicle are presumably more threatening.

CONCLUSION

The performance analysis shows that the IVSAWS square-root, raised-cosine, n/4-shifted DQPSK waveform operating at 220 MHz using differentially coherent demodulation can meet the target performance (BER = 1×10^{-5}) while providing continental coverage for both base station and mobile transmitters. Cost-effective modem implementation is expected since devices of higher complexity (e.g., digital cellular telephones) are expected to sell below the $400 level once initial market penetration is achieved. Other radio components, such as amplifiers, are available off the shelf.

Four issues have been identified as significant and are presented below in order of importance:

- Cost-effective system implementation depends upon the affordable construction of a network of base station transmitters. Communication range will therefore have a major impact on system cost since the required base station density decreases by seven if base station communication range is increased by 2.5 (over rural plains). In a rural environment, over plains, the performance analysis projects that seven base stations will be required to provide continuous coverage over a 450-km diameter circle if the antennas are elevated 200 m above the average terrain. Using towers to increase antenna elevation significantly extends communication range; however, this approach has its limitations due to the cost of erecting tall towers. Placing smaller towers on hilltops will be more cost-effective. A better solution to extending communication range would be to transmit the IVSAWS signal at a lower frequency. Lower frequencies will exhibit less trans-horizon path attenuation. If the FHWA secures a nationwide channel at a lower frequency, it is recommended that IVSAWS operation be shifted. The specified waveform can be transported to any operating frequency that supports a channel with at least 4 kHz of usable bandwidth. At this time, however, the secured 220-MHz to 222-MHz channels appear to be the only viable option.

- The communication ranges predicted by the ELR model depend upon an ERP above the limits specified in the FCC Rules to Provide for the Use of the 220-MHz to 222-MHz Band by the Private Land Mobile Radio Service. An ERP of 500 W at all antenna HAAT's is assumed. While an exemption to the specified limits is probable, it implies more sophisticated baseband and/or RF filtering in order to contain spectral emissions on adjacent channels to levels that would occur if the specified ERP limits were followed.

- Rayleigh fading significantly reduces over the horizon communication range. Since fades will typically span tens to hundreds of bits at levels 10 dB to 20 dB below the average signal level, adaptive channel equalization has the potential to significantly extend communication range. It is recommended that equalization be evaluated in the field in order to measure its

merit, If a significant increase in communication range can be achieved, the use of equalization should be incorporated into the waveform standard by direct specification or by the adoption of performance standards that imply its use.

- The performance of the mobile transmitter slotted Aloha protocol shows that in a 5-transmitter environment with all transmitters in communication range of the same target receiver, the probability that any given mobile unit will transmit an alert without collision every 6 s is 0.98. This scenario needs to be monitored to ensure that it represents an upper bound. It is at least feasible that more than five emergency vehicles could be in transit to the same event at the same time, each representing a distinct and separate hazard. For the purpose of this study, it was assumed that the probability of having six or more mobile units simultaneously in transit within the same communication coverage area is small.

CHAPTER 12. OPERATIONS CENTER IMPLEMENTATION ANALYSIS

INTRODUCTION

This analysis identifies commercial off-the-shelf (COTS) hardware and software available to implement IVSAWS Operations Center (IOC) functions. When implemented, the IOC functions may initially exist as a stand-alone system; however, the long-term goal will be to add the IOC system to a larger IVHS system in the form of a software applique. The IOC functions include collection of hazard and advisory event information, and IVSAWS message generation, storage, look-up, verification, and dissemination.

This analysis provides a sampling of the existing systems, the expected hardware and software necessary to create a new system, and the COTS hardware and software costs for both the existing system and the new system. Software development costs for an IVSAWS-unique applique are not included. The cost associated with providing a standard messaging capability, however, are provided for both the new and existing systems.

ARCHITECTURE REVIEW

The IVSAWS System Architecture Analysis (task C, subtask 1) yielded two promising system architectures that can implement IVSAWS at different levels of cost and functionality. System Architecture #l employs a new narrowband communication link operating in the 220-MHz to 222-MHz band supported by Global Positioning System (GPS) area of coverage (AOC) control. Figure 80 shows a block diagram of the narrowband-GPS architecture. System Architecture #2 utilizes existing FM radio stations to broadcast IVSAWS alerts via the Radio Broadcast Data System (RBDS). GPS or other geolocation systems (e.g., Position Information Navigation System (PINS)) can be used to control the AOC. Figure 81 shows a block diagram of the RBDS architecture.

At the IOC level, both architectures are the same. In fact, both systems share the same architecture with respect to implementation of the following functions: (1) hazard and advisory event detection and verification, (2) collection of hazard and advisory event information, and (3) IVSAWS message generation. As described above, the latter two functions are to be embedded in an IOC. Message dissemination, another IOC function, is implemented differently by the two architectures.

The scope of this implementation analysis focuses on the IOC for the following reasons: (1) except for an antenna performance analysis and invehicle retrofit analysis, the definition of an invehicle implementation (task F) has been deleted from the scope of this study effort and (2) information flow from the hazard or advisory site to the IOC uses channels that have already been implemented (except iridium).

EXISTING SYSTEMS AVAILABLE FOR ADAPTATION WITHIN AN IOC

The IOC system may be implemented by modifications to an existing fleet management system. The identified fleet management systems will need modifications to provide the IOC capability. This method of generating an IOC will be the shortest time to completion, however, it will lock the IVSAWS into a specific manufacturer due to the proprietary nature of the messaging protocols.

There are several fleet management systems available that provide two-way messaging. These systems provide both an integrated workstation and an integrated invehicle unit. There are also manufacturers that make dumb-terminal displays for the invehicle application. The existing systems are designed to communicate via conventional and trunked data radio and cellular telephone. The existing systems provide an interface for a GPS receiver to append vehicle location to automatic responses and invehicle-generated messages.

Fleet management systems are provided to accommodate efficient use of company vehicle resources. The central controller typically provides a status display of the fleet assets under control. Messages are generated and sent to a specific vehicle instructing the operator to take a specific action. Broadcast, or all-call, capabilities are provided for each vehicle on a particular conventional or trunked data radio channel. The invehicle unit provides the location information to the central controller with each acknowledgment of message receipt and with each status message generated.

The messaging systems provide guaranteed delivery using some network, OSI Level 3, protocol. This protocol will retransmit all unacknowledged messages and request retransmission of all messages received in error. Forward error correction may be provided in the more expensive systems.

For the IOC application, the existing fleet management systems provide a model. Modification of the existing systems is not recommended due to the cost associated with modifications. As an alternative, the existing systems should be studied and the best features identified. Message formats should be identified, communication protocols defined, and communication medium selected. Finally, a system specification for the IOC should be developed and each of the fleet management system providers should be asked to provide a competitive bid to meet the IOC requirements and schedule. This approach will accomplish two goals. First, all manufacturers will be competing to build a specified system that will be universal. Second, competition for the IVSAWS business will ensure a low-cost system for both the IOC and the invehicle unit(s).

Table 38 lists the manufacturers of fleet management systems, the fleet management system name, and the communication service used. The range in price for the fleet management system central controller software, communication hardware, and development system software is from $3,000 to $10,000. The range in price for the invehicle communication unit and display unit is $750 to $1,300.

Table 39. Fleet management systems.

Manufacturer	Product	System
Mentor Engineering	Express Mobile Data Terminal (MDT)	Conventional/Trunked Radio
DINET, Inc.	DATA-MATE 1000 MDT	Conventional/Trunked Radio
Sigtone, Inc.	mobi-SCRIPT	Conventional/Trunked Radio
Arrowsmith Shelburne, Inc.	MX5-Tracker System	Conventional/Trunked Radio and Cellular
Titan Linkabit	PositCOMM	Conventional/Trunked Radio
Millidyne	STX-4000 MDT	Conventional/Trunked Radio and Cellular
PacTel Teletrac	Fleet Director	Conventional/Trunked Radio, Cellular, and Paging
Granite Communications	Granite Links	Conventional/Trunked Radio, Cellular, and Satellite
DATARADIO Corp.	Vehicular Information Series	Conventional/Trunked Radio and Cellular

IOC DEVELOPMENT

The IOC task will be developed using either an existing system or designed from the ground up. The above-mentioned systems will be investigated to determine their applicability to the IOC task. Also, the ability to transport the software to a UNIX workstation will be investigated. A block diagram of the IOC is shown in figure 82.

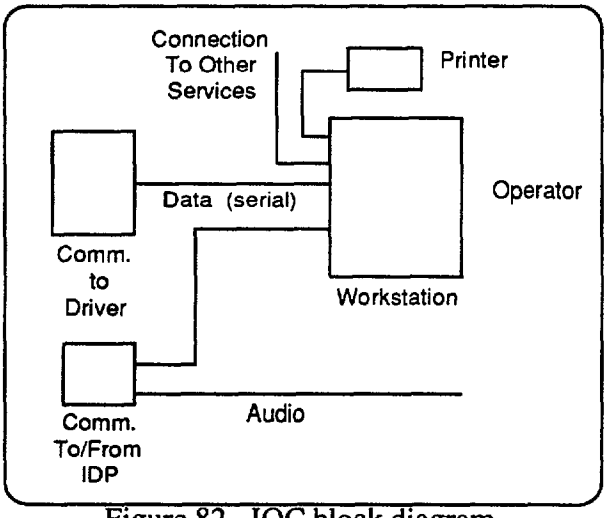

Figure 82. IOC block diagram.

If a third party's management package cannot be modified to work in the IVSAWS environment, then a system will need to be developed. The IVSAWS management program will need to be a stand-alone program that can run on an IBM PC/Compatible 80386 SX @ 33 MHz (see table 41), or a UNIX workstation (see table 40). The interfacing program should be windows-based and written in a high-level language; the primary IVSAWS message handler will be a data base

system programmed to provide for manipulation and storage of all the message data. Since there are several platforms available for IVSAWS (PC's and workstations primarily), it is recommended that a data base package that is cross platform-compatible be selected — Foxpro, dBase IV, and Oracle 7 are three such packages. (Foxpro should have their UNIX-based product out by the fourth quarter of 1993.) The data base packages provide a development environment to set up the operator interface.

The costs involved with developing an IVSAWS interface will be the purchase of the development software and a data base software package, along with the costs incurred during the development of the IVSAWS management program. A one-time purchase of a developer's kit or compiler (depending on the software product purchased) will allow for the customized IVSAWS data base application to be run at any site without having to purchase a separate site license. The software costs are shown in table 40.

Table 40. Development software costs.

Operating System	**Cost (PC)**	**Cost (Workstation)**
DOS 6.0	~$50	N/A
Workstation OS	N/A	$500 – $1,000
Data Base Software		
Foxpro 2.5 developer's kit	~$350 ~$495	* *
dBase IV compiler kit	~$500 ~$495	$900 – TBD TBD
Oracle 7 (+ developer's kit)	~$2,300 – $3,500	~$14,000
C++		
	$200 – $800	$950 – $4,500
* not available until fourth quarter of 1993		

Automapping, to provide coordinates for phoned-in incident locations, may need to be purchased. The scope of the coverage, however, is a limiting factor in that most cities are currently mapped, but most rural maps have not been generated. The highway performance analysis branch for the Federal Highway Administration's (FHWA) office of planning and environment in Washington, DC, should have a national highway planning network map scaled to 1:100,000. The FHWA map could provide a source for an IVSAWS data base. Third-party vendors supply geopositional software that utilizes digital maps and provides latitude/longitude equivalents to locations selected via mouse positioning or address selection. Currently, there are no mile marker overlays that can be used with a software system; however, the FHWA data base may provide the mile marker information. Software systems cost $3,000 (approx.) with the mapping data base varying per county from $5,000 (for Imperial County, CA) to $15,000 (for Los Angeles, Orange, Ventura, and San Bernardino Counties - one package).

IVSAWS Application Software

The IVSAWS appliqué will coordinate incoming information from the IDP, alert broadcasts to drivers, and interim IVSAWS information management (the incident message data base). The IVSAWS management program should be menu-driven with selections to allow for communication parameters to be established and modified, data to be backed up to a tape drive, reports to be generated, preplanned incidents to be entered using a calendar application, and the execution of the incident message subprocess. The management program is the primary message handler that aids the operator in generating, sending, and storing IVSAWS messages.

Communications Interface. The communications interface selection will bring the operator into a subprocess that will allow for the setting up and modification of the communication links. The links consist of the data interface to the IVSAWS Deployment Personnel (IDP) hardware and the data interface to the hardware used for getting incident information out to the driver. The subprocess will provide a summary table indicating the current status of each interface.

Data Back Up Data will be automatically collected and stored within the internal hard drive. The data back-up subprocess will provide for the backing up of the data onto a magnetic tape.

Report Generation. Data reduction and/or report generation will be provided for all of the stored message information (data message traffic and incident messages generated within the incident message subprocess). The parameters for reduction will include: messages to and from the IDP, messages sent to the drivers, incident-type ID, date range, time range, IDP ID, priority, incident message number, area, and roadway location. The subprocess will provide for both on- or off-line reduction. Reports will be stored on disk, with the option to print as part of the menu selections.

Calendar. The calendar selection will allow the operator to generate a message for pre-planned events such as road closures, road work, parades, etc. The message will be built ahead of time with the operator manually entering the AOC information. The operator can then assign a date and time that the message is to be transmitted. The operator will have the power to set the reminder flag or suppress it at any time. The selection will allow the operator to view all pre-planned event messages by week and by month. Once a message has been entered and a date and time associated with it, the operator will be automatically notified when it is time to send the message. The message will be pulled out of the data base and displayed, allowing the operator a chance to modify the message as well as to suppress transmission if the event is not to take place.

Incident Message. The IVSAWS system will constantly monitor the IDP communication interface so as to notify an operator of an incoming incident. Notification will include an audible sound and the incident message subprocess is automatically started. If an incident is called in over the phone, the operator will be able to manually start the incident message subprocess. The incident message subprocess will prompt the operator for fields, such as alert status, priority, type information, etc. as defined in the functional requirements document, in order to complete an advisory message. Data collected from the IDP — AOC coordinates and shape, IDP zone identification, zone location, data quality, and community segment — will be automatically fed in from communication lines. If the data is not sent in via the communication links, the operator should have the capability to manually enter in all data. System time and date should also be automatically attached to each incoming IDP message and each outgoing message to the drivers. Incident messages, the textual portion of an IVSAWS message report, will be stored, each with a unique message ID number associated with it. The operator can select an incident message using the associated ID number or a key-word search. If more data is required with a message (e.g., how long is the incident expected to last), the program shall prompt the operator for input.

IOC HARDWARE CONFIGURATION AND COST

The IOC requires a minimum hardware suite to perform its function. The IOC will be loaded with communication, data base, operating system, and windows software as a minimum. As functions are added to the Intelligent Vehicle-Highway System (IVHS), the IOC may be joined with a larger system or functions will be added to the IOC hardware. The IOC hardware should be selected with the final IVHS configuration having been considered. A stand-alone IOC implementation will require the following minimum configuration for a PC-based system (table

41), and for a UNIX workstation-based system (table 42). Figure 83 shows the configuration of the IOC hardware station. Finally, table 43 shows the expected communication connections.

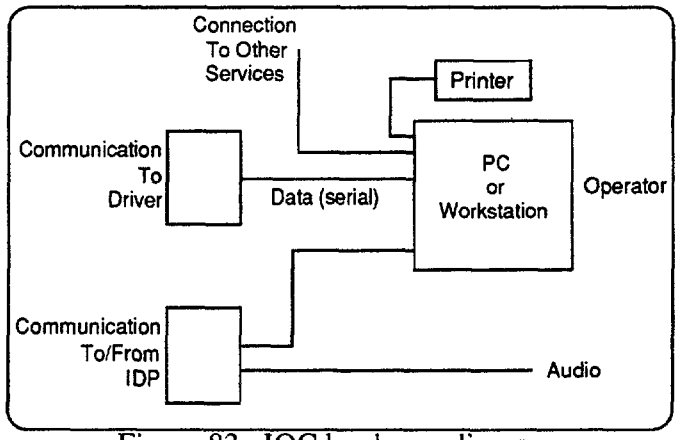

Figure 83. IOC hardware diagram.

Table 41. PC-based IOC hardware costs.

PC Hardware Description	Cost
IBM PC/Compatible 80386 DX 33 MHz w/256k Cache, Math Co-Processor Socket; 4 MB of RAM; 100-MB Hard Disk (250 MB Recommended); 1.2- and 1.44-MB Floppy Disk Drives; 2 Serial and 1 Parallel Ports; Super VGA Card with 1 MB RAM; Super VGA 0.28-dp Monitor; 101-Key Enhanced Keyboard; Mini-Tower Case w/230W Power Supply, Microsoft Compatible Mouse; MS-DOS 5.0; Windows 3.0	$1,200
250-MB Tape Backup System with Tape Cartridge	$250
HPIIP Laser Printer or equivalent	$750
Ethernet Interface Card (16 Bit)	$150
9600 bps Modems (IDP & FM)	$300
Total Cost	$2,650

Table 42. UNIX workstation-based IOC hardware costs.

UNIX Workstation Hardware Description	Cost
Workstation 33- to 40-MHz Processor; 41- to 48-cm Monitor; 16 MB RAM; 425-MB hard disk; 1.44-MB drive; Ethernet/2 serial/1 parallel	$10,000 to $17,000
Tape Drive (for workstation)	$2,000 to $3,000
HPIIP Laser Printer or equivalent	$750
9600 bps Modems (IDP & FM)	$300
Total Cost	$13,050 to $21,050

Table 43. IOC communication connections.

Equipment/Application	Connections	Qty	Notes
Operator Workstation			
Printer	Parallel	1	
IDP communication	RS-232/RS-422	1	modem
Driver communication	RS-232/RS-422	1	if not using RBDS/SCA
RBDS communication	RJ-11 from modem	1	requires a modem (internal or external)
SCA communication	RJ-11	1	requires special line from local phone co.
SAP communication	RJ-11	1	see SCA
Voice Communication			
Phone station w/headset and speaker option	RJ-11	1	phone connection for operator (2 to 4 lines)

IDP-IOC INTERFACE

Two options exist for the implementation of IDP-IOC communications: (1) direct IDP-IOC communication; and (2) IDP-IOC communications routed through existing agency communication centers (e.g., police dispatch). At present, Option #1 appears to be most promising due to observations made during the IVSAWS Deployment Community Interviews; at present, a direct IDP-IOC communication implementation has a cost and coverage disadvantage. With respect to cost, the postulated rural deployment agencies utilize a wide range of communication equipment (e.g., low-band VHF, high-band VHF, trunked systems, cellular telephone). Interagency communication is almost nonexistent. If direct IDP-IOC communication is to be supported with current agency equipment, the IOC will require a diverse,

and therefore expensive, communication suite. Alternatively, a standardized TDP-IOC communication interface implementation will reduce IOC costs at the expense of IVSAWS deployment agencies that will need to purchase the standardized communication hardware. Coverage is also an issue; unless the standardized implementation utilizes an existing communication system backbone with adequate coverage (e.g., repeater network), additional costs will be incurred to provide or expand coverage to regions of the rural transportation environment that can receive the most benefit from the application of IVSAWS.

If direct IDP-IOC communication is implemented, the IDP's will call in information, voice, or data to the IOC. When the IDP is using data, the controller will allow message generation prior to call-in. The IDP will then call in and transmit the data to the IOC. There is no need for the IDP to speak with the IOC operator in this configuration. The IDP will also have a voice connection to the IOC operator. The IDP may place a voice call to the IOC operator when the situation to be reported is not completely supported by the prearranged incident report forms. The IOC operator will also be capable of reaching all IDP's via voice for clarification of incident reports. Therefore, it is expected that there will be two communication lines to each IOC operator station — one voice line and one data line (directly to the computer). When operational, iridium will be an attractive implementation of direct IOC-IDP communication due to its global coverage and low infrastructure costs (satellites already in place). However, initial channel leasing and end-user equipment costs may be prohibitive to most deployment agencies.

IVSAWS TRANSMITTER

System Architecture #1 (Narrowband GPS). The narrowband-GPS architecture requires the construction of new 220-MHz to 222-MHz base stations to provide coverage for IVSAWS broadcasts. Base stations located at or near a regional IOC could be tied to the center by wire or optic fiber. When IOC-base station separation prohibits the use of a direct connection, dedicated telephone service could be used to link the station and IOC provided that the desired base station site has access to the service. However, in many instances, it will be desirable to locate base stations on mountain tops or at other geographically advantageous locations in order to maximize coverage and minimize the number of base stations required to provide acceptable IVSAWS service. In these instances, co-locating IVSAWS base stations with microwave repeater sites appears attractive for the following reasons: (1) the repeater sites are usually selected to maximize coverage and will therefore provide good IVSAWS coverage, (2) power is available, and (3) the microwave links can be used to link the IOC and base station. Figure 84 shows an architecture using microwave links.

The cost of each base station can be subdivided into the following elements:

- Equipment.
- Installation.
- Maintenance.

Equipment costs are summarized in table 44. It should be noted that the costs listed are for unit quantity. Significant cost reductions (>50 percent) can be expected with large quantity purchases. The cost of installation and checkout of the equipment at the sites is estimated to be $30,000 per site. Maintenance is estimated to cost $5,000 per site per year.

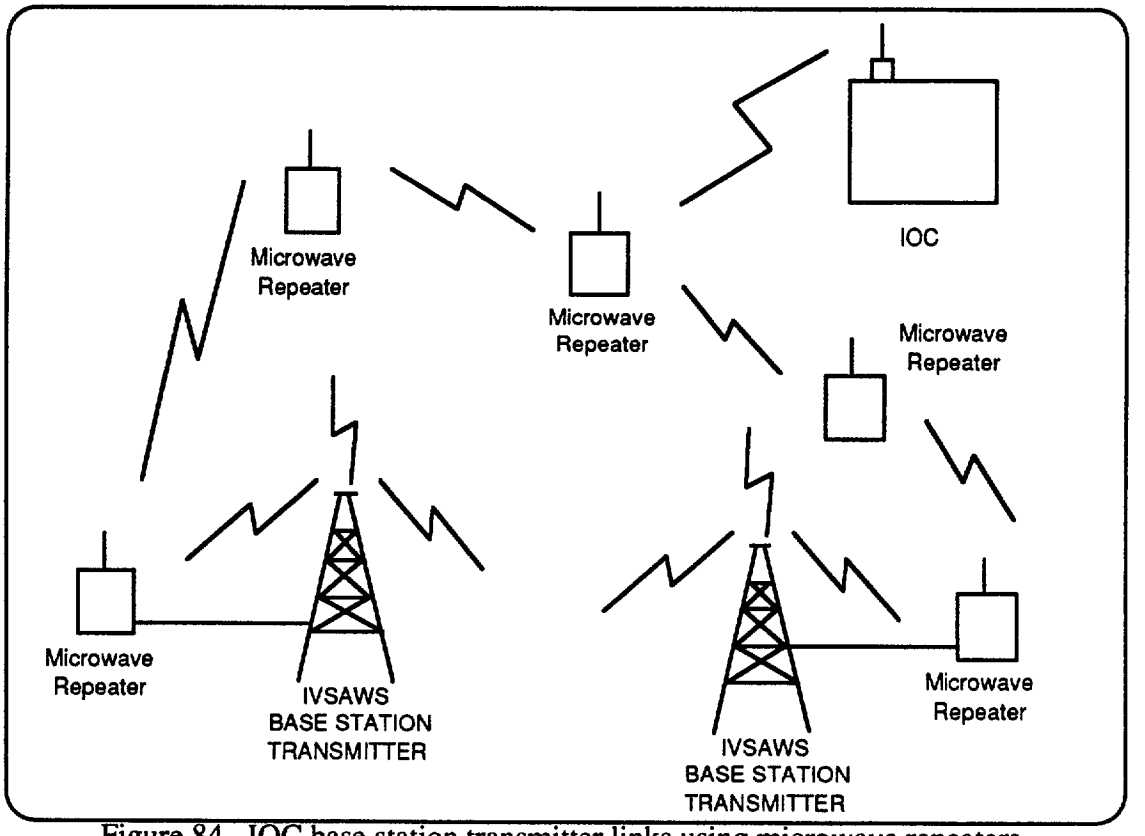

Figure 84. IOC base station transmitter links using microwave repeaters.

Table 44. Base station hardware costs.

Base Station Component	Cost
8-Channel GPS Receiver with Antenna and Cables	$40,000
200W 220-222 MHz Power Amplifier	$20,000
$\pi/4$ - Shifted Differential QPSK Modulator	$27,000
Antenna	$10,000
Controller (80386 PC)	$2,000
Accessories	$2,000
Total Cost	$101,000

System Architecture #2 (RBDS-PINS/GPS). The FM transmitters will be receiving their IVSAWS drive from the RBDS sideband sent from an FM station. The FM station houses the RBDS encoder that will put the message on the sideband of the signal. The encoder receives the information for transmission directly from the IOC system. To prevent large time delays, a direct phone line connection from the IOC system to each of the FM stations will be required (no delays will be added due to setting up a connection via the regular dialing technique).

CHAPTER 13. VEHICLE RETROFIT ANALYSIS

INTRODUCTION

The purpose of this analysis is to identify the requirements to retrofit a vehicle with hardware that will provide IVSAWS functionality in the vehicle. This analysis includes the new vehicle and retrofit vehicle configurations, cost data for the individual components, and issues that will be decided at a future date.

ARCHITECTURE REVIEW

The IVSAWS System Architecture Analysis (task C, subtask 1) yielded two promising system architectures that can implement IVSAWS at different levels of cost and functionality. System Architecture #l employs a new narrowband communication link operating in the 220-MHz to 222-MHz band supported by Global Positioning System (GPS) area of coverage (AOC) control. System Architecture #2 utilizes existing FM radio stations to broadcast IVSAWS alerts via the Radio Broadcast Data System (RBDS). GPS or other geolocation systems (e.g., Position Information Navigation System (PINS)) can be used to control the AOC.

Of the two architectures, the RBDS system is most amenable to a vehicular retrofit for the following reasons:

- When utilizing PINS AOC control, the retrofit unit will require, minimally, two external connections — an FM signal input from the existing car radio antenna and prime power (possibly from a cigarette lighter adapter).
- RBDS is a standard.
- RBDS radios are presently being manufactured (European versions).

Two of the three retrofit options presented are derivatives of the RBDS system architecture.

INTEGRATED SYSTEM: RBDS-PINS

The hardware components for the baseline non-retrofit RBDS system, shown in figure 85, are anticipated to consist of an RBDS/AM/FM receiver, a navigation system, a display unit, and an IVSAWS controller. The location of the hardware will be vehicle-dependent; however, the receiver, controller, and display unit shall be located within the driver compartment. The display unit should be positioned within an acceptable human factors range of the driver. The navigation system need not be accessed by the driver, therefore, its location within the vehicle is not a critical factor. The invehicle IVSAWS hardware positioning shall be left as design decisions for the vehicle engineers.

Minimum hardware components required for a baseline IVSAWS controller include:

- Microprocessor (286 or better).
- D/A converter.
- 12-VDC power supply.
- Three serial ports - audio out (left and right).

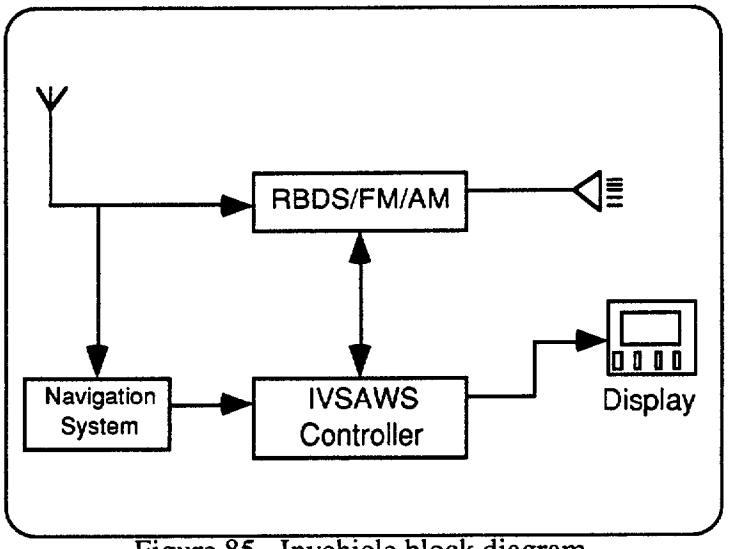

Figure 85. Invehicle block diagram.

Data flow between the invehicle system units shall be as shown in figure 86. The incident information will be received by the RBDS receiver (see IVSAWS architectural tradeoff study), which shall forward the message information to the IVSAWS controller. The RBDS receiver shall not compromise its regular functions and will continue to display non-IVSAWS information being sent to it by the FM station. The navigational system determines the location of the vehicle by means of FM triangulation (see the IVSAWS architectural tradeoff study) and sends position information to the controller. The controller determines when the driver should be notified based on driver inputs (button selections made from the display unit), message type, and vehicle location. Once it is determined that the driver should receive the incident alert, the controller shall forward an interrupt and voice to the RBDS receiver.

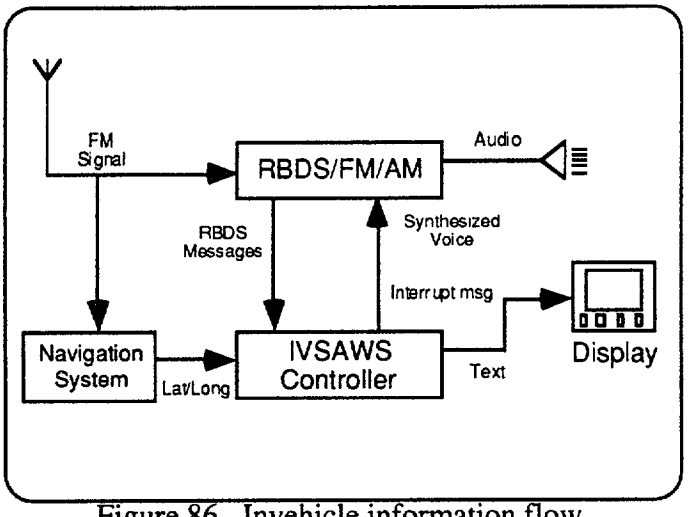

Figure 86. Invehicle information flow.

The incident message shall be sent as synthesized voice to the RBDS receiver and as text to the display unit. The RBDS receiver should be equipped with an auxiliary port to accommodate the voice information from the controller. An assumption has been made that the RBDS receiver

comes equipped with a serial port. The RBDS receiver serial port is expected to send the RBDS message data to the IVSAWS controller. The RBDS receiver serial port is expected to receive start and stop interrupts from the IVSAWS controller to indicate that audio information is available for broadcast on the speaker system.

The driver interaction with the IVSAWS consists of defining the information to be heard and displayed, hearing the audio information, and viewing the information on the display screen. The display unit shall provide keys to allow the driver to make Driver Alert Warning Subsystem (DAWS) selections. The commands to be implemented by the DAWS are beyond the scope of the IVSAWS study.

Retrofit Option 1

The first option is to have separate pieces of hardware for the navigational unit (PINS or GPS), the display, and the IVSAWS controller. Figure 87 shows the IVSAWS retrofit installation requirements. The IVSAWS controller should be manufactured to contain an FM receiver with RBDS scanning capabilities. The controller is spliced into the existing antenna cable to allow monitoring of the RBDS subcarrier(s) for IVSAWS data. A switcher, located within the controller, shall provide entertainment output suppression while alert information from the IVSAWS is being broadcast to the driver.

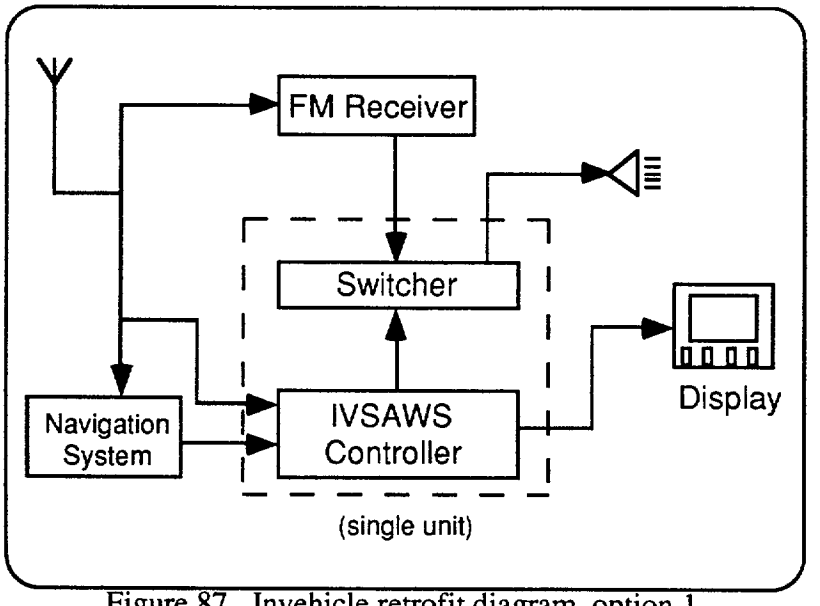

Figure 87. Invehicle retrofit diagram, option 1.

The hardware required for an IVSAWS retrofit system (option 1) is as follows:

- FM (or AM/FM) receiver.
- IVSAWS controller (with scanning RBDS/FM receiver) unit.
- Switcher (part of the IVSAWS controller unit).
- Navigational unit.
- The PINS system should be marketed as part of the system due to its reasonable cost and the ease in installation (no external antenna required).
- Display unit (after market).
- Selection buttons located on the front of the unit.

For vehicles that have a geopositional location device (such as GPS) already installed, the PINS navigation system would not need to be purchased. The communication cable between the IVSAWS controller and the navigation unit, however, will still be required. Design of the IVSAWS controller should accommodate position information from several navigation systems, for example, GPS and PINS. This will allow the IVSAWS to accept position information from different manufacturer's equipment in different formats.

For vehicles with both front and rear speakers, the switcher shall have control of the front speakers for broadcast of the IVSAWS alert information. The switcher shall not control the rear speakers unless they are the only speakers available in the vehicle; a warning should be included to accommodate the many varieties of amplifiers on the market. There will be a slight loss in audibility of the IVSAWS information being delivered to the driver. The broadcast entertainment, still playing on the rear speakers, is not expected to lessen the impact of the IVSAWS information. Coincident with the audio broadcast will be a textual information display of the IVSAWS information broadcast to the driver. This will allow the driver to read the broadcast IVSAWS alert information, which allows more than one opportunity to comprehend the alert.

Minimum hardware components required for the IVSAWS controller (retrofit option 1) are as follows:

- Microprocessor (286 or better).
- FM receiver scanning and RBDS capability.
- D/A converter.
- 12-VDC power supply.
- Audio switching components.
- Two serial ports.
- Audio in (Left and Right).
- Audio out (Left and Right).
- Coaxial connection.

Retrofit Option 2

Another retrofit option is to have a single IVSAWS controller unit that would contain the display and the navigational capabilities as shown in figure 88. The controller unit would have the same FM/RBDS scanning capabilities and entertainment interrupt as the controller in option 1. The navigational source and display unit, however, would be contained within the unit instead of externally as they are for retrofit option 1. Another added component to the controller would be an internal speaker for transmitting IVSAWS messages to the driver. The hardware required for an IVSAWS retrofit system, option 2, is an FM (or AM/FM) receiver and an IVSAWS controller unit.

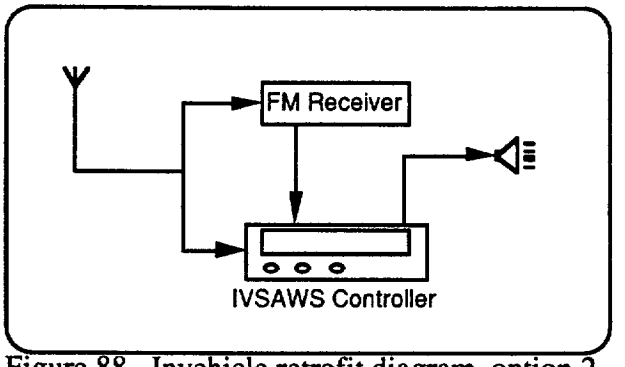

Figure 88. Invehicle retrofit diagram, option 2.

Minimum hardware components required for the IVSAWS controller (retrofit option 2) are as follows:

- Microprocessor (286 or better).
- FM receiver scanning and RBDS capability.
- D/A converter.
- 12-VDC power supply.
- Navigational unit (PINS).
- Operator entry buttons/keys.
- Audio switching components.
- Speaker.
- Display – two lines of up to 16 characters per line.
- One serial port.
- Audio in (Left and Right).
- Audio out (Left and Right).
- Coaxial connection.

Installation – RBDS System Architecture

The installation of the retrofit components will assume that an AM, FM, or AM/FM receiver exists in the vehicle. The components to be installed will consist of the IVSAWS controller, the display unit, and the navigation system. All components shall be powered by the 12-VDC car battery. The navigation system should be installed in a location similar to that used by a remote CD changer. The IVSAWS controller and display unit are to be located in the main passenger compartment of the vehicle. For retrofit option 1, the controller unit need not be accessed by the driver, so it should be mounted under the dash or in some other out-of-the-way location. The display unit should be mounted on top of the dash within the driver's forward field of vision. The distance should not be more than that for the car stereo for two reasons: the driver must be able to read the text data and must be able to reach the selection buttons located on the unit. The IVSAWS controller for retrofit option 2 contains the display, so the location of the unit should be in a similar location as the display unit for the retrofit option 1 configuration.

Tables 45 and 46 indicate the type of connections that are anticipated for the invehicle installation. The vehicle antenna will be spliced into and routed off to the navigation system and the IVSAWS controller for reception of FM signals. The audio output from the current entertainment system will be routed to the controller unit (containing the switcher) and from there, routed to the front (if there are front and rear speakers) speaker lines. For retrofit option 1, there shall be communication cables routed between the navigation system and the controller. The display unit shall have its own cable (terminated inside the unit so as to prevent accidental

disconnects) that will need to be connected to the controller unit. Retrofit option 2 contains both the display and the navigational components; however, connections shall be available should an external connection be desired.

Cost – RBDS System Architecture

The cost of the IVSAWS shall be determined by the manufacturers of the system components. The required components for the baseline system and their estimated costs are listed in table 47. The cost of the hardware and the installation of the retrofit system are listed in tables 48 and 49. The cost of the installation was estimated by obtaining quotes from installers based on the similarity that exists between the installation of the IVSAWS system and an installation of a cellular radio or a multi-compact disk changer, receiver, and amplifier.

Table 45. Cables and connections retrofit, option 1.

Unit	Cable	Connector
Navigation System (from Antenna)	Coaxial	BNC
Navigation System (to Controller)	Shielded 8-pair 20 AWG	RS-232 (DB- 15 pin)
Controller (from Antenna)	Coaxial	BNC
Controller (switcher) (to FM receiver)	Speaker Wire	TBD
Controller (switcher) (to Speakers)	Speaker Wire	N/A
Display Unit (to Controller)	Shielded 8-pair 20 AWG	RS-232 (DB-15 pin)

Table 46. Cables and connections retrofit, option 2.

Unit	Cable	Connector
Controller (from Antenna)	Coaxial	BNC
Controller (to FM receiver)	Speaker Wire	TBD
Controller (to Speakers)	Speaker Wire	N/A

Table 47. Baseline equipment costs.

Equipment	cost
RBDS	TBD
IVSAWS Controller	TBD
Display Unit	$50
Cables	$30
Total Cost	TBD

Table 48. Retrofit equipment and installation costs, option 1.

Equipment	cost
IVSAWS Controller + switcher	TBD
Display Unit	$50
Cables	$30
Navigational Unit (PINS)	$200
Installation	$50 - $80
Total Cost	TBD

Table 49. Retrofit equipment and installation costs, option 2.

Equipment	cost
IVSAWS Controller	TBD
Cables	$10
Installation	$50
Total Cost	TBD

Issues – RBDS System Architecture

There are some issues that should be mentioned, assumptions made, and future possibilities for the invehicle system considered. First, the RBDS receiver can only receive RBDS information when tuned to an FM station that is broadcasting data on the sideband. Second, the RBDS radios may not have a means for two-way communication. Third, the RDS-TMC (Radio Data System – Traffic Message Channel protocol) technology has been developed and has been tested in Europe. The RDS-TMC will be tested in the United States soon and should be considered as an IVSAWS standard. Finally, the amount of noise expected within a vehicle could warrant the use of RS-422 instead of RS-232.

When the driver is tuned to a station not transmitting the IVSAWS information, the IVSAWS information will not be received by the driver. With option 1, consideration should be given to the RBDS receiver scanning the FM band for IVSAWS information. Received IVSAWS information could then be sent to the IVSAWS controller to determine the information importance to this driver. With option 2, consideration should also be given to providing the

RBDS/FM receiver within the IVSAWS controller. The second option allows a single IVSAWS controller to be manufactured for both the new and retrofit vehicles, which should provide a lower-cost IVSAWS controller to be developed.

The IVSAWS controller with RBDS/scanning and switcher two-way communication is only possible if the RBDS radio provides a means of two-way communication. For the Michigan DOT DIRECT project, the three automobile manufacturers are partners, and part of the criteria for their vehicles' RBDS receivers is that they have an RS-232 connection (for data transfer) and an auxiliary port for the audio. It is unknown, however, if this configuration is planned for radios marketed to the masses. If the RBDS receivers do not have a standard two-way communication interface, then communication with the radio would be impaired and there may be no way to indicate to the radio that there is external information that must be passed through. Once again, this points to building an IVSAWS controller with the FM/RBDS receiving capabilities built-in.

Attention should be given to using the RDS-TMC (the "Alert C" document) standard for the IVSAWS messages. This would circumvent the need to generate a new alert message and utilize the technology already generated by radio manufacturers. There are currently manufacturers of RDS ("RBDS" is the U.S. standard for the same technology) radios that have integrated synthesized voice and external displays for the explicit use of the TMC (Traffic Message Channel) subprocess capability within the RBDS system. These systems have been used in the European community's advanced traffic testing — the DRIVE (Dedicated Road Infrastructure for Vehicle Safety). Bosch and Phillips, for example, installed synthesized voice, excluding text, into their receivers used in the BEVEI and Rhine corridor projects, each part of the ACCEPT project (Germany and the Netherlands). The Minnesota Department of Transportation (MnDOT) "Trilogy Project" is testing the first TMC transmissions in the United States utilizing an RDS receiver from Delco. Also tested will be RDS-TMC systems from Volvo and Indikta Display Systems, Ltd., in the United Kingdom. The Indikta radio is equipped with an external display unit as is envisioned for the IVSAWS system. Manufacturers of RDS-capable receivers are known to consist of Delco, Phillips, Bosch, Sony, Panasonic, and others.

It is anticipated that there will be quite a bit of noise in the vehicle environment, therefore, cable shielding is required. Shielded twisted pair cable used with EIA RS-422 would be better suited to the noisy environment; however, the navigation system comes equipped with an ETA RS-232 interface. The cost of providing a converter from EIA RS-232 to EIA RS-422 could be prohibitive. Another option to circumventing the noise problem is to have the navigation system send the position message two or three times in a row. All options should be considered for reduced cost and ease of implementation.

RETROFIT SYSTEMS – SYSTEM ARCHITECTURE #l (NARROWBAND - GPS)

Though less amenable to a retrofit, the narrowband-GPS system architecture could be integrated into a dashboard-mounted device. In order to be affordable, a highly integrated unit will be required, possibly fabricated with semiconductor technology using Application-Specific Integrated Circuits (ASIC's). When the market is measured in millions of units, the large volume of units to be produced makes the non-recurring investment to develop the semiconductor masks and processes reasonable.

If the vehicle to be retrofit is equipped with a GPS subsystem that can export latitude/longitude data and once-per-second GPS time ticks, an IVSAWS receiver with display, control buttons, and tone generator should be producible at a $250 (approximately) cost to the consumer. The price is based upon a comparison of the IVSAWS receiver to the projected price of emerging

digital cellular telephones (DCT) ($450 after 2 years on the market). The IVSAWS receiver and DCT receiver are of similar complexity. However, as a unit, the IVSAWS retrofit “box” should cost less since no transmitter is required, processing tasks are considerably less complex, and no voice interface is required (i.e., no microphone, D/A converter, or A/D converter).

If the vehicle to be retrofit is not equipped with a GPS subsystem, a GPS receiver will need to be incorporated into the integrated IVSAWS dashboard-mounted device. The cost of such a unit is estimated to be $450.

CHAPTER 14. ANTENNA PERFORMANCE ANALYSIS

ANTENNA CHARACTERISTICS

The proposed IVSAWS architecture will add two electromagnetic links to a modern vehicle containing several simultaneous, wireless systems. It will be necessary then to significantly reduce the size of any added antenna or to share these new links with the existing vehicle antennas. Focusing on this issue, including cost and performance of the new links, is the purpose of this analysis. A vehicle antenna may represent a personal ornament so its general appearance must not be neglected. Radomes and mounting hardware fall into this category. It is out of the scope of this analysis to determine the public acceptance of each design, although the success of an antenna may be determined more from its esthetics than from its engineering performance.

The two communication architectures selected are centered around 200 MHz for the narrowband with GPS approach and 100 MHz for the RBDS with GPS or PINS approach. The geolocation system PINS uses the FM radio frequency band, whereas GPS uses its own 1575-MHz band. Possible placements on a vehicle of antennas for these systems are shown in figure 89. The characteristics of each of these antenna types are summarized in table 48.

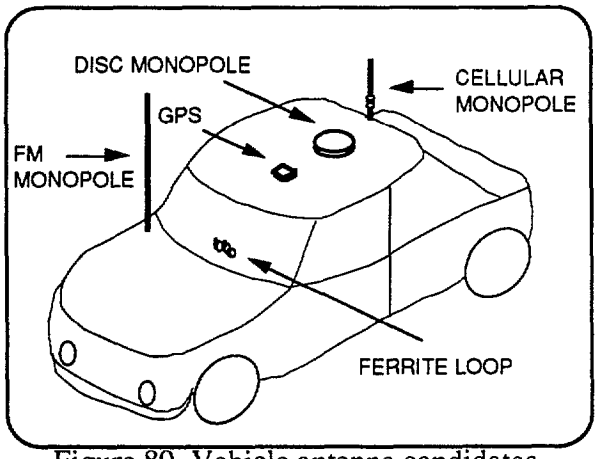

Figure 89. Vehicle antenna candidates.

GPS ANTENNA

For navigation, a GPS satellite link is easy to implement on a vehicle. Flat planar elements are becoming readily available from a variety of manufacturers. This antenna should be a dedicated element-mounted on the rooftop as in figure 89. The technology that provides a small profile is the micro-strip patch. The antenna has omni-directional patterns in azimuth with peak gain directed away from the earth. The polarization is right-hand circular operating from 1565 to 1585 MHz. Table 50 lists the specifications of a typical Ball Communication System Division GPS antenna. Eventually, automobiles may come equipped with a GPS antenna, so its cost would become negligible.

Table 50. Summary of antenna candidates.

Type	Band (MHz)	Gain (dBi)	Size (mm)	Cost (each)
FM MONOPOLE DIPLEXER & connectors	88-108 220-222	-1 to -12 -1 to -12	762 x 2.54 (dia)	$6
CELLULAR MONOPOLE DIPLEXER & connectors	220-222 870-890	-1 4	254 x 2.54 (dia)	$6
DISC-LOADED MONOPOLE	220-222	<-3	12.7 x 203.2 (dia)	$15 (POLYCLAD PCL FR204)
FERRITE LOOP & matching circuit	220-222	<-10	101.6 x 10.16 (dia)	$4 (FAIR-RITE No.68 Nickel Zinc)
MICRO-STRIP PATCH GPS	1573-1577	5	50.8 x 50.8 (x 2.54 depth)	$15 (BALL AN496A)

VHF ANTENNAS

The other link, VHF band, 220 MHz to 222 MHz, will need a larger antenna if high efficiency and low costs are desired. Typically, quarter-wave monopoles are simple to build and their radiation resistance is compatible with most RF systems. An existing FM vehicle antenna is this type. It would seem possible to share the FM antenna with the IVSAWS VHF band. At 220 MHz, the antenna would be close to a half wavelength, nominally 762 mm. But an existing FM antenna would vary in its actual length from vehicle to vehicle due to retractable elements and manufacturing tolerances. Given that the length might vary from as little as 381 mm, a -6-dB impedance mismatch degradation in gain would be expected. Figure 90 shows a plot of loss-length variations given a 762-mm monopole antenna matched at 220 MHz. Added loss can also be attributed to scattering and de-polarization from the roof, window supports, or any nearby metallic surroundings. FM band losses are reduced by high-power circular polarized transmissions. Similar solutions for the IVSAWS could be adopted. Another approach might be to share an existing cellular telephone antenna. This antenna is less likely to vary in length and since cellular antennas are generally mounted on the roof, better performance results.

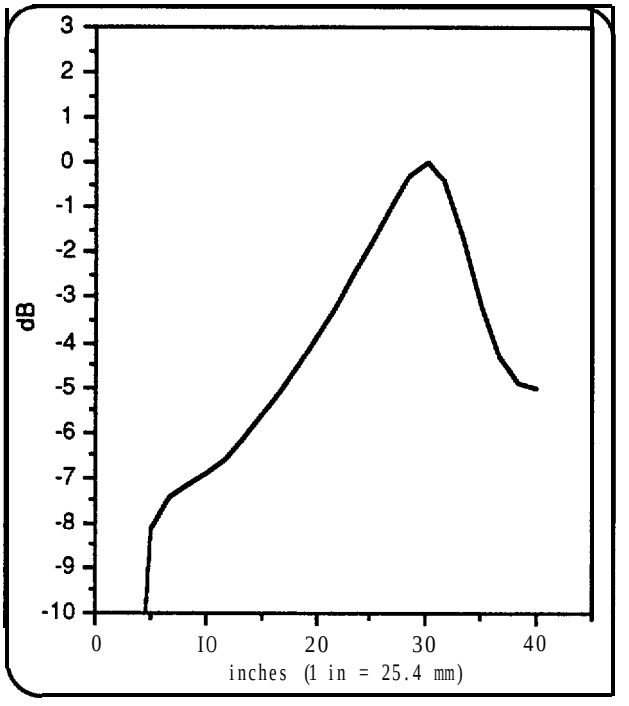

Figure 90. Gain degradation of a 762-mm monopole tuned to 220 MHz as a function of length variation.

The same antenna can be used for dual-frequency operation. This is done by a diplexer. A filter arrangement makes it possible for two radios to channel energy through a single radiating structure without interfering with each other. Simply hooking the two radios in parallel would cause random loss. The diplexer isolates the radios, thus improving radiation efficiency. An impedance matching circuit would also help improve performance. The antenna impedance for the dual-band monopole will be matched at its nominal frequency; but at 220 MHz, the radiation resistance will be reactive and not necessarily 50 ohms. A matching circuit would be included with the diplexer as in figure 91.

A small discreet antenna is another option for the VHF band. A miniature self-matched antenna would remove the diplexer and the uncertainty of sharing an unknown antenna with the system. The main disadvantages include engineering development, performance, and material costs. The antenna department has experience designing small antennas. Specifically, a dielectric disc-loaded monopole could be used. The disc profile is planar, like the GPS antenna, so the two could be packaged together. The patterns are omni in azimuth and a GPS antenna mounted on top would not interfere with performance. The disc diameter is proportional to the operating wavelength. It can be reduced significantly by shorting inductive posts symmetrically at the substrate edge or by increasing the relative dielectric constant of the substrate between the discs. Currently, ceramic substrates are available with high dielectric. It should be possible to make a disc less than 101.6 mm in diameter. However, the cost of the ceramic makes this approach less desirable. A lower cost and lower dielectric substrate (several layers of fiberglass circuit board) yields disc diameters of 203.2 mm. Also, cheaper substrate is less efficient because of the higher loss tangent and ohmic heating. Heating is overcome by increasing the plate separation to 12.7 mm or greater. The cost of the disc antenna in table 48 is based upon substrate only, additional manufacturing cost cannot be forecasted. The challenge in using a disc-loaded monopole is finding a low-cost, low-loss, high-dielectric substrate.

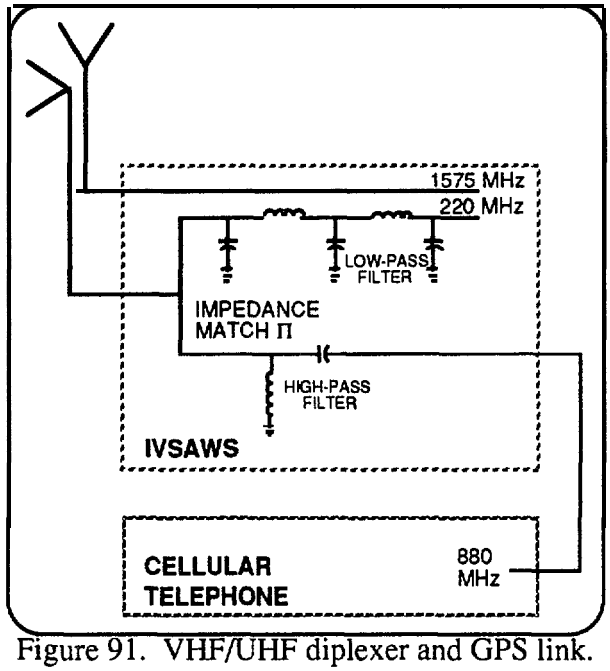

Figure 91. VHF/UHF diplexer and GPS link.

The complement of the electric monopole is the magnetic monopole or loop antenna. Specifically, a ferrite-loaded coil can be useful for mobile communication. The advantages are the same as for the disc. The drawback, like for the disc, is heating loss. With the small size, heating losses compete with the radiation resistance. By adding more turns, the radiation resistance can be increased. At RF frequencies, the effectiveness of many turns reaches a limit when displacement current flows between the windings instead of through the inductance. The radiation efficiency of a loop antenna can only be further increased by introducing a ferrite rod into the coil. The ferrite will also absorb heat, so this antenna is not very efficient. The ferrite loop antenna's main feature is its small size and low cost. The actual size, loss, and cost of the antenna depend on the geometry of the coil. Measurements will be needed to research the ferrite loop further.

ANTENNA RADIATION PATTERNS

The determination of the antenna radiation patterns depends on the antenna type plus the mount location and model of the vehicle. This is most true for antennas mounted on the front or rear hoods. A $\pm$5-dB degradation in azimuth gain can be expected for hood mounts. The GPS antenna will be less concerned with this degradation because its gain will peak at zenith. Vertical monopoles will not necessarily peak on the horizon given a fixed length and ground plane size. The Bardeen Mitre Integral Equation method can be used to estimate the elevation pattern of a half-wave monopole. It shows that the FM monopole candidate will peak near the horizon at 220 MHz as shown in figure 92. The monopole's azimuth pattern cannot accurately be calculated subject to local geometry of the vehicle, however, it will approach omni-directional. The cellular monopole is difficult to calculate because of its loading coil near the base of the antenna. Elevation pattern measurements at 250 MHz give a good indication (figure 93) that the cellular telephone antenna will perform well. The disc-loaded monopole will also have these characteristics. The ferrite loop, a magnetic monopole, will have a complement pattern, omni in elevation and similar to figures 92 and 93 in azimuth.

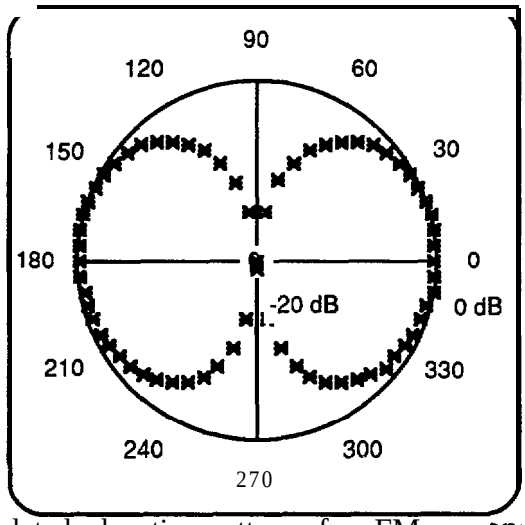

Figure 92. Calculated elevation pattern of an FM monopole @ 220 MHz.

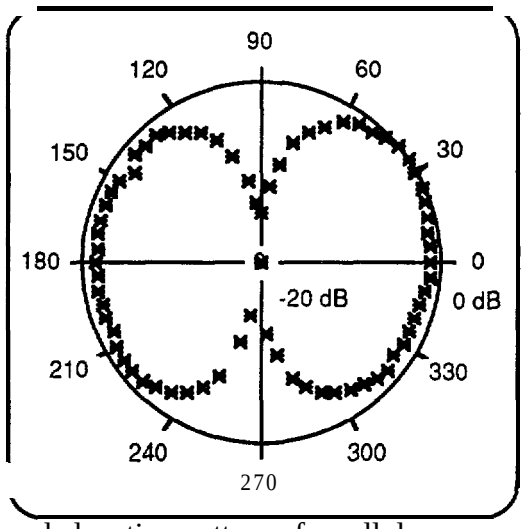

Figure 93. Measured elevation pattern of a cellular monopole @ 250 MHz.

CONCLUSIONS

Two antenna links have been studied, GPS and VHF, with the results summarized in table 48. It suggests that many options of performance, size, and cost are available with existing technology. The cost is only an estimate using vendor quotes on materials or units in quantities over 10,000. The less costly choice is the ferrite loop antenna. Its cost can be justified only when built together on the same circuit board with the RF components. Special mounting hardware, connectors, cable, and cosmetic costs will be additional for an external mount. The best performance antennas are the dual-band monopoles. The FM monopole may not be a consistent radiator because of length variation (-6 dB) and its azimuth uncertainty for hood mount (±5 dB). The FM gain given in table 48 of -1 dBi is for the best case only; -12 dBi is possible in many cases. This uncertainty is reduced using the cellular monopole because it is less likely to vary in length and because it can be mounted unobstructed on the roof. By adding a diplexer, the

cellular user simply connects his antenna port to the IVSAWS radio, which is connected to the antenna. The GPS antenna should also be mounted on the roof for the best performance. The possibility of packaging a GPS antenna with the VHF band is promising, using the disc-loaded monopole. Both planer antennas might be manufactured for less cost as one piece, rather than as two individual components. The final antenna choice should be weighed against the system parameters.

REFERENCES

1. ***In-Vehicle Safety Advisory and Warning Systems (IVSAWS) Task B-Final Report,*** Streff, F.M., Ervin, R.D., and Blower, D.F., The University of Michigan Transportation Research Institute, UMTRI, Ann Arbor, Michigan, 1991.

2. "Comparison of Abbreviation Methods: Measures of Preference and Decoding Performance," Rogers, W.H. and Moeller, ***G., Human Factors,*** Issue 26, pp. 49-59, 1984.

3. "Abbreviating Words Systematically," Barrett, J.A. and Grems, M., ***Communications of the ACM,*** Vol. 3, pp. 323-324, 1960.

4. "Visual Presentation of Information," Grether, W.F. and Baker, C.A., ***Human Engineering Guide to Equipment Design,*** pp. 41-121, U.S. Government Printing Office, Washington, DC, 1972.

5. "Design of Visual Displays," Helander, M.G., ***Handbook of Human Factors,*** Chapter 5.1, Wiley and Sons, New York, New York, 1987.

6. "Preliminary Investigation of Movement Time Between Brake and Accelerator Pedals in Automobiles," Davies, B.T. and Watts, J.M., ***Human Factors,*** Vol. 4, Issue 11, pp. 407-410, 1969.

7. "The Sensitivity of Response Measures of Alphanumeric Legibility to Variations in Dot Matrix Display Parameters," Snyder, H.L. and Taylor, G.B., ***Human Factors,*** Vol. 4, Issue 21, pp. 457-472, 1979.

8. "Color Graphics: Blessing or Balleyhoo?," Murch, G.M., ***Computer Graphics Forum,*** Vol. 4, pp. 127-135, 1958.

9. "Human Factors Design Considerations for Military Color Graphic Displays," Hansen, ***O.K., Computer Graphics '84: Conference Proceedings, Volume I, Tutorials,*** National Computer Graphics Association, pp. 235-253, 1984.

10. ***Human Factors Design Handbook,*** Woodson, W.E., McGraw-Hill, New York, New York, 1981.

11. ***Standard for Human Factors Engineering of Visual Display Terminal Workstations,*** ANSI/HFS 100-1988, Human Factors Society, Santa Monica, California, 1988.

12. "Reading from Color Displays: A Psychophysical Model," Travis, D.S., Bowles, S., Seton, J., and Peppe, R., ***Human Factors,*** Issue 32, pp. 147-156, 1990.

13. "Design of Auditory and Tactile Displays," Sorkin, R.D., ***Handbook of Human Factors,*** Chapter 5.2, Wiley and Sons, New York, New York, 1987.

14. ***Driver Understanding and Recognition of Automotive ISO Symbols,*** Saunby, C.S., Farber, E.I., and DeMello, J., SAE Technical Paper Series, 880056, ISSN 0148-7191, 1988.

15. ***How to Make Displays Legible,*** Shurtleff, D.A., Human Interface Design, La Mirada, California, 1980.

16. "Blink Coding for Information Display," Smith, S.L. and Goodwin, ***N.C., Human Factors,*** Vol. 3, Issue 13, pp. 283-290, 1971.

17. ***Human Engineering Guide to Equipment Design (revised),*** Van Cott, H.P. and Kinkade, R.G., U.S. Government Printing Office, Washington, DC, 1972.

18. "An Evaluation of Five Different Abstract Coding Methods," Hitt, W.D., ***Human Factors,*** Vol. 3, pp. 120-130, 1961.

19. "Recognizability and Effectiveness of Warning Symbols and Pictorals," Mayer, D.L. and Laux, L.F., ***Proceedings of the Human Factors Society 33rd Annual Meeting,*** pp. 984-988., 1969.

20. ***Evaluation of Driver/Vehicle Accident Reactions,*** Wilson, F.R., Sinclair, J.A., and Bisson, B.G., draft report, pp. l-27, 1984.

21. "Perception-Response Time to Unexpected Roadway Hazards," Olson, P.L. and Sivak, M., ***Human Factors,*** Vol. 1, Issue 28, pp. 91-96, 1986.

22. ***Analysis of Alphanumeric Symbology Requirements for Automotive Displays,*** Campbell, J.R., Hughes Radar Systems Group, Report No. 89-27-07/G7696-001, 1989.

23. ***Human Engineering Criteria for Military Systems, Equipment, and Facilities,*** MIL-STD-1472D, U.S. Government Printing Office, Washington, DC, 1990.

24. "Communications Concepts to Support Early Implementation of TVHS in North America," D.J. Chadwick, J.W. Marshall, B.L. Hinton, V.M. Patel, and H.W. Lam, ***IVHS Journal,*** Volume 1, April 1992.

25. "The Relationship Between System Architecture and Radio Frequency Requirements for IVHS," D.J. Chadwick, V. Patel, and G. Beronio, ***Proceedings of the Annual Meeting of IVHS America,*** pp. 439-444, 1992.

26. "Strategies for Acquiring Radio Frequencies for IVHS," D.J. Chadwick and V. Patel, ***Proceedings of the 1992 Vehicular Technology Society Conference,*** pp. 79-82, 1992.

27. "A Preliminary Design and Field Test Results for a System to Distribute Digital Traffic Data Using FM Broadcast Station Subcarriers," Chadwick, Patel, Marshall, Haamalainen, Saxton, and Mammano, ***Proceedings of the 1993 Annual Meeting of IVHS America,*** pp. l- 6, 1993.

28. ***Feasibility and Concept Selection of a Safety Hazard Advance Warning System (SHAWS), Volume II - Technical Report,*** Federal Highway Administration, Report No. FHWA/RD-81/124, pp. 3-9, Washington, DC, April 1982.

29. ***Parameters Affecting Stopping Sight Distance,*** Transportation Research Board, Report No. PB86-186905, pp. 24-27 and 125, Washington, DC, June 1984.

30. ***Evaluation of Driver/Vehicle Accident Reactions,*** Wilson, F.R., Sinclair, J.A., and Bisson, B.G., draft report, pp. 1 and 27, 1984.

31. ***Parameters Affecting Stopping Sight Distance,*** Transportation Research Board, Report No. PB86-186905, p. 28, Washington, DC, June 1984.

32. ***Driver Response to Amber Phase of Traffic Signals,*** Olson, P.L. and Rothery, R., Highway Research Board, Bulletin 330, p. 48, Washington, DC, 1962.

33. "Smart Highways," R. Jurgen, ***IEEE Spectrum,*** pp. 26-36, May 1991.

34. "The TravTek Driver Information System," M. Krage, ***Vehicle Navigation and Information Systems '91 Conference Proceedings,*** SAE Technical Paper 912820, pp. 739-748, 1991.

35. ***Keynote Address,*** 1992 Conference on Improving Rural Transporation Through Advanced Transportation Technologies, Redding, California, 1993.

36. ***Mobility 2000 Presents Intelligent Vehicles and Highway Systems*** - 1990 ***Summary,*** special publications, Texas Transportation Institute, Texas A&M University, Texas, 1990.

37. "Development of a Functional Specification for an In-Vehicle Safety Advisory and Warning System," G. Mayhew, J. Erlichman, K. Shirkey, and F. Streff, ***Vehicle Navigation and Information Systems '91 Conference Proceedings,*** pp. 1077-1091, SAE Technical Paper 912864, 1991.

38. "The Development of IVHS in Europe," B. McQueen and I. Catling, ***Proceedings of the 1991 SAE Future Transportation Technology Conference,*** pp. 31-42, SAE Technical Paper 911675, 1991.

39. "A Pilot Study for the IVSAWS Driver Alert Warning System Design," J. Erlichman, ***Proceedings of Human Factors Society 36th Annual Meeting,*** pp. 480-484, 1992.

40. "Federal Radionavigation Policy and the Land Transportation User," D. Olsen, ***Vehicle Navigation and Information Systems '91 Conference Proceedings,*** pp. 627-634, SAE Technical Paper 9 12806,199 1.

41. "Impact of Radionavigation Policy and IVHS Developments on the IVSAWS Program," G. Mayhew and K. Shirkey, ***Proceedings of the 1992 Future Transportation Technology Conference,*** pp. 63-68, SAE Technical Paper 921600, 1992.

42. "Spread Spectrum for Commercial Communications," D. Shilling, L. Milstein R. Pickholtz, M. Kullback, and F. Miller, ***IEEE Communications Magazine,*** pp. 66-79, April 1991.

43. "Vehicle Locator Uses Spread Spectrum Technology," B. Xenakis and A. Evans, ***RF Design Magazine,*** pp. 58-65, October 1992.

44. ***Statistical Abstract of the United States,*** 112th edition, U.S. Bureau of the Census, Washington, DC, 1992.

45. ***Better Designs in Half the Time,*** King, Bob, GOAL/QPC, Methuen, MA, 1989.

46. ***Strategies for Real-Time System Specification,*** Hatley, Derek J. and Pirbhai, Imtiaz A., Dorset House Publishing Company, New York, New York, 1988.

47. ***Invehicle Safety Advisory and Warning System (IVSAWS) Communications Technology Selection,*** Invehicle Safety Advisory and Warning System (IVSAWS), Publication No. FHWA-RD-94-192, Vol. IV, Appendix I, 1995.

48. ***Invehicle Safety Advisory and Warning System (IVSAWS) Task E Report, Results of the Driver Alert Warning System Design Mockup Testing and Evaluation,*** Invehicle Safety Advisory and Warning System (IVSAWS), Publication No. FHWA-RD-94-191, Vol III, Appendix G, 1999.

49. ***Market-Potential Assessment of IVSAWS Research Among the General Public and Deployment Professionals,*** Invehicle Safety Advisory and Warning System (IVSAWS), Publication No. FHWA-RD-94-193, Vol. V, Appendix M, 1995.

50. ***Assessment of IVSAWS Deployment Practicality,*** Invehicle Safety Advisory and Warning System (IVSAWS), Publication No. FHWA-RD-94-192, Vol. IV, Appendix K, 1995.

51. ***Travelers Information Stations and Highway Advisory Radios,*** Digital Recorders, Inc., Research Triangle Park, NC, 1992.

52. ***Automatic Audio Signing,*** Report No. FHWA/RD-84/038, Research, Development, and Technology, Turner-Fairbank Highway Research Center, U.S. Department of Transportation, Federal Highway Administration, McLean, Virginia, June 1984.

53. ***United States RBDS Standard National Radio Systems Committee,*** Electronic Industries Association and the National Association of Broadcasters, Washington, DC, January 8, 1993.

54. "ADVANCE Project Set to Put Five Vehicles on Test Area Roads," ***Inside IVHS,*** March 1, 1993.

55. ***Digital Transmission Theory,*** Benedetto, S., et al., Prentice-Hall, Inc., p. 256, Englewood Cliffs, NJ, 1987.

56. ***Modern Communications and Spread Spectrum,*** Cooper, C.R. and McGillem, C.D., McGraw-Hill Book Company, p. 259, New York, New York, 1986.

57. ***European Autovon Trunk Testing,*** Final Report FR 72- 14- 1321, FHWA, Washington, DC, November 30, 1972.

58. ***Mobile Communications Design Fundamentals,*** Lee, William C.Y., John Wiley & Sons, Inc., p. 108, New York, New York, 1993.

59. ***Modern Communications and Spread Spectrum,*** Cooper, C.R. and McGillem, C.D., McGraw-Hill Book Company, p. 206, New York, New York, 1986.

60. "An Analysis of Pilot Symbol Assisted QPSK for Digital Mobile Communications," Cavers, J.K., ***Proceedings IEEE Vehicular Technology Conference,*** pp. 928-933, 1990.

61. ***Mobile Communications Design Fundamentals, Lee,*** William C.Y., John Wiley & Sons, Inc., p. 216, New York, New York, 1993.

62. ***Transmission Loss Predictions for Tropospheric Communication Circuits,*** P.L. Rice, A.G. Longley, K.A. Norton, and A.P. Barsis, NBS Technical Note 101, Volumes I and II, 1967.

63. ***Digital Transmission Theory,*** Benedetto, S., et al., Prentice-Hall, Inc., p. 292, Englewood Cliffs, NJ, 1987.