Preliminary Human Factors Guidelines for Automated Highway System Designers (Second Edition)

Volume I: Guidelines for AHS Designers

PUBLICATION NO. FHWA-RD-97-125

APRIL 1998

U.S. Department of Transportation
Federal Highway Administration

Research and Development
Turner-Fairbank Highway Research Center
6300 Georgetown Pike
McLean, VA 22101-2296

FOREWORD

This is the first volume of a two-volume report. The report presents the results of a comprehensive examination of human factors considerations related to the human-centered design of Automated Highway Systems (AHS). The results are shown as preliminary guidelines that AHS designers may utilize to maximize the effectiveness and efficiency of system performance, ensure a high level of system safety, and to improve user acceptance. These guidelines were compiled from material pertinent to AHS in existing handbooks, guidelines, human factors engineering texts and articles, as well as analyses in the current research projects in this effort. This report will be of interest to all AHS designers involved in such activities as specification of functional requirements, determination of interface philosophy, selection of controls and displays, design of controls and displays, design of driver-system dialogues, and design of driver workspace.

Sufficient copies of the report are being distributed to provide a minimum of two copies to each FHWA regional and division office, and five copies to each State highway agency. Direct distribution is being made to division offices.

A. George Ostensen, Director
Office of Safety and Traffic Operations
Research and Development

NOTICE

This document is disseminated under the sponsorship of the Department of Transportation in the interest of information exchange. The United States Government assumes no liability for its contents or use thereof. This report does not constitute a standard, specification, or regulation.

The United States Government does not endorse products or manufacturers. Trade and manufacturers' names appear in this report only because they are considered essential to the object of the document.

1. Report No. FHWA-RD-97-125	2. Government Accession No.	3. Recipient's Catalog No.
4. Title and Subtitle PRELIMINARY HUMAN FACTORS GUIDELINES FOR AUTOMATED HIGHWAY SYSTEM DESIGNERS (SECOND EDITION) Volume I: Guidelines for AHS Designers		5. Report Date April 1998 6. Performing Organization Code
7. Author(s) A. Lee Levitan, Max Burrus, Wende L. Dewing, William F. Reinhart, and Pawan Vora B. Robert E. Llaneras		8. Performing Organization Report No. 10. Work Unit No. (TRAIS) 3B4d1012
9. Performing Organization Name and Address A. Honeywell Inc. 3660 Technology Drive Minneapolis, Minnesota 55418 B. InterScience America 21495 Ridgetop Circle Sterling, Virginia 22170		11. Contract or Grant No. DTFH61-92-C-00100 13. Type of Report and Period Covered Guidelines for AHS designers/9-92–12-97
12. Sponsoring Agency Name and Address Office of Safety and Traffic Operations R&D Federal Highway Administration 6300 Georgetown Pike McLean, Virginia 22101-2296		14. Sponsoring Agency Code
15. Supplementary Notes Contracting Officer's Technical Representative (COTR)—Elizabeth Alicandri, HSR-30		

16. Abstract

Human factors can be defined as "designing to match the capabilities and limitations of the human user." The objectives of this human-centered design process are to maximize the effectiveness and efficiency of system performance, ensure a high level of safety, and maximize user acceptance. These objectives are achieved by systematically applying relevant information and principles about human abilities, characteristics, behavior, and limitations to specific design problems. This handbook provides a source document for automated highway system (AHS) designers that will facilitate a human-centered design process for the AHS. It is the second edition of these guidelines (first edition is report RD-94-116) and includes the addition of key AHS attributes proposed by the National Automated Highway System Consortium, updates to the chapter on general guidelines for electronic visual displays, and the addition of several operational guidelines (chapter 10).

17. Key Words Automated highway system, human factors handbook, human factors guidelines, AHS designers.		18. Distribution Statement No restrictions. This document is available to the public through the National Technical Information Service, Springfield, Virginia 22161.	
19. Security Classif. (of this report) Unclassified	20. Security Classif. (of this page) Unclassified	21. No. of Pages 221	22. Price

Form DOT F 1700.7 (8-72)

SI* (MODERN METRIC) CONVERSION FACTORS

APPROXIMATE CONVERSIONS TO SI UNITS

Symbol	When You Know	Multiply By	To Find	Symbol
		LENGTH		
in	inches	25.4	millimeters	mm
ft	feet	0.305	meters	m
yd	yards	0.914	meters	m
mi	miles	1.61	kilometers	km
		AREA		
in^2	square inches	645.2	square millimeters	mm^2
ft^2	square feet	0.093	square meters	m^2
yd^2	square yards	0.836	square meters	m^2
ac	acres	0.405	hectares	ha
mi^2	square miles	2.59	square kilometers	km^2
		VOLUME		
fl oz	fluid ounces	29.57	milliliters	mL
gal	gallons	3.785	liters	L
ft^3	cubic feet	0.028	cubic meters	m^3
yd^3	cubic yards	0.765	cubic meters	m^3

NOTE: Volumes greater than 1000 l shall be shown in m^3.

Symbol	When You Know	Multiply By	To Find	Symbol
		MASS		
oz	ounces	28.35	grams	g
lb	pounds	0.454	kilograms	kg
T	short tons (2000 lb)	0.907	megagrams (or "metric ton")	Mg (or "t")
		TEMPERATURE (exact)		
°F	Fahrenheit temperature	5(F-32)/9 or (F-32)/1.8	Celcius temperature	°C
		ILLUMINATION		
fc	foot-candles	10.76	lux	lx
fl	foot-Lamberts	3.426	candela/m^2	cd/m^2
		FORCE and PRESSURE or STRESS		
lbf	poundforce	4.45	newtons	N
lbf/in^2	poundforce per square inch	6.89	kilopascals	kPa

APPROXIMATE CONVERSIONS FROM SI UNITS

Symbol	When You Know	Multiply By	To Find	Symbol
		LENGTH		
mm	millimeters	0.039	inches	in
m	meters	3.28	feet	ft
m	meters	1.09	yards	yd
km	kilometers	0.621	miles	mi
		AREA		
mm^2	square millimeters	0.0016	square inches	in^2
m^2	square meters	10.764	square feet	ft^2
m^2	square meters	1.195	square yards	yd^2
ha	hectares	2.47	acres	ac
km^2	square kilometers	0.386	square miles	mi^2
		VOLUME		
mL	milliliters	0.034	fluid ounces	fl oz
L	liters	0.264	gallons	gal
m^3	cubic meters	35.71	cubic feet	ft^3
m^3	cubic meters	1.307	cubic yards	yd^3

Symbol	When You Know	Multiply By	To Find	Symbol
		MASS		
g	grams	0.035	ounces	oz
kg	kilograms	2.202	pounds	lb
Mg (or "t")	megagrams (or "metric ton")	1.103	short tons (2000 lb)	T
		TEMPERATURE (exact)		
°C	Celcius temperature	1.8C + 32	Fahrenheit temperature	°F
		ILLUMINATION		
lx	lux	0.0929	foot-candles	fc
cd/m^2	candela/m^2	0.2919	foot-Lamberts	fl
		FORCE and PRESSURE or STRESS		
N	newtons	0.225	poundforce	lbf
kPa	kilopascals	0.145	poundforce per square inch	lbf/in^2

* SI is the symbol for the International System of Units. Appropriate rounding should be made to comply with Section 4 of ASTM E380.

(Revised September 1993)

TABLE OF CONTENTS

Section Page

VOLUME I: GUIDELINES FOR AHS DESIGNERS

Part I: Introduction 1

Why Human Factors? 1
The System Design Process 2
Applying the Guidelines 5
Structure of the Rest of the Handbook 5

Part II: Guidelines for Controls and Displays for Use on the Automated Highway System 7

Chapter 1. Introduction to the User-System Transactions 7
Overview of an Automated Highway System 7
AHS Scenarios Developed for This Contract 7
Key AHS Attributes Identified by the National Automated Highway System Consortium 8
Elements of a Transaction 9
Use of the Transactions in System Design 10

Chapter 2. Population Characteristics 11

Chapter 3. General Guidelines for Controls 21
Preventing Accidental Actuation of Controls 25

Chapter 4. Guidelines for Specific Controls 29
Foot Pushbuttons 29
Joysticks 31
Joysticks: Isometric 31
Joysticks: Isotonic 33
Key Operated Switches 34
Knobs (Continuous) 36
Legend Switches 39
Pushbuttons 41
Rocker Switches 46
Rotary Selectors 48
Slide Switches 51
Toggle Switches 53
Touch Screens 55
Voice Recognition 56

Chapter 5. General Guidelines for Electronic Visual Displays 59

TABLE OF CONTENTS (CONTINUED)

Section | Page

VOLUME I: GUIDELINES FOR AHS DESIGNERS (CONTINUED)

Chapter 6. Guidelines for Specific Displays 71
- Analog Indicators 71
- Cathode Ray Tube (CRT) Displays 86
- Counters 88
- Electroluminescent (EL) Displays 96
- Head-Up Displays (HUD's) 97
- Indicator Lights (Simple) 103
- Light-Emitting Diode (LED) Displays 111
- Liquid Crystal Displays (LCD's) 112
- Plasma (Gas Discharge) Displays 115
- Vacuum Fluorescent Displays (VFD's) 116
- Nonspeech Auditory Displays 118
- Speech Displays 124

Chapter 7. Workspace Design 129

Chapter 8. Labeling 133

Chapter 9. User-Computer Dialogues 141
- General Guidelines for User-Computer Interactions 141
- Function Keys Dialogue 147
- Menu Selection Dialogue 151
- Question and Answer Dialogue 157
- System Responsiveness 159
- Error Handling 160

Chapter 10. Operational Guidelines 163
- A Cautionary Note 163
- The Operational Guidelines 163

Appendix A. Controls Included In The Handbook 171
- Evaluation Factors 171
- Controls Rated 171
- The Ratings and Final Controls Selection 172
- When to Use Each Control 176

TABLE OF CONTENTS (CONTINUED)

Section | Page

VOLUME I: GUIDELINES FOR AHS DESIGNERS (CONTINUED)

Appendix B. Displays Included in the Handbook 179
Evaluation Factors 179
Displays Rated 179
The Ratings and Final Displays Selection 180
When to Use Each Display 186

References 189

Index 197

VOLUME II: USER-SYSTEM TRANSACTIONS

Distinguishing Features of the Scenarios 1

Notes on the User-System Transactions 3

The Transactions 3
Free Agency/Self-Contained Scenario 3
Assumptions 3
Transactions 4
Barriers on the Highway with Grouped Vehicles Scenario 11
Assumptions 11
Transactions 11
Segregated Highway with Individual Vehicles Scenario 31
Assumptions 31
Transactions 32

Reference 43

LIST OF FIGURES

Figure Page

VOLUME I: GUIDELINES FOR AHS DESIGNERS

1. Major steps in the system design process 2
2. Reference figures for user population sizes 13
3. Functional reach as a function of height above the sitting surface 17
4. Some specific control movement recommendations for turning a device on or increasing a value 23
5. Reference figure for foot pushbutton specifications 30
6. Reference figure for joystick specifications 32
7. Reference figure for key operated switch specifications 35
8. Good and poor pointer-scale arrangements 37
9. Recommended shapes for coding knobs 38
10. Reference figures for knob specifications 38
11. Reference figure for legend switch specifications. 40
12. A handle-mounted pushbutton 43
13. A recessed pushbutton 44
14. Reference figure for pushbutton specifications 45
15. Reference figures for rocker switch specifications 47
16. Preferred shape for a rotary selector 48
17. The pointer end is indicated by the marker on the control 50
18. Spacings for a rotary selector guard 50
19. Reference figure for rotary selector specifications 51
20. Reference figure for slide switch specifications 53
21. Spacings for a toggle switch guard 54
22. Reference figure for toggle switch specifications 55
23. Reference figure for graduation mark specifications 76
24. Preferred pointer tip shapes 80
25. Normal number location and acceptable number location when readout accuracy is not critical or space is limited 86
26. Counter design features 89
27. Enhancement techniques for control-display panels 131
28. Example hierarchical labeling scheme 139
29. Soft labels for nondedicated function keys 148

LIST OF FIGURES (CONTINUED)

Figure Page

VOLUME I: GUIDELINES FOR AHS DESIGNERS (CONTINUED)

30. Correct spatial relationship between soft function key labels and associated hard function keys 150
31. Use of a standard command entry area for selection codes 152
32. Inactive menu choices are "grayed out." 155
33. Use of a separate control action to accept a choice selected by a cursor .. 156
34. Use of white space and visual cues to distinguish questions and prompts 158

VOLUME II: USER-SYSTEM TRANSACTIONS

1. Branching for entry into system for the Barriers on the Highway with Grouped Vehicles Scenario 12

LIST OF TABLES

Table Page

VOLUME I: GUIDELINES FOR AHS DESIGNERS

1. Where to find information needed for AHS design 4
2. Example user-system transaction 10
3. Selected characteristics of the automated highway system user population 11
4. Change in reach as a function of change in seat back angle 17
5. Control movement recommendations 22
6. Minimum separation distances between controls 25
7. Recommended methods for preventing accidental actuation of controls 27
8. Specifications for foot pushbuttons 30
9. Specifications for isometric joysticks 32
10. Specifications for isotonic joysticks 33
11. Specifications for key operated switches 36
12. Specifications for knobs 39
13. Specifications for legend switches 41
14. Specifications for thumb and finger pushbuttons 45
15. Specifications for palm pushbuttons 45
16. Specifications for rocker switches 48
17. Recommended starting positions and angular displacements for rotary selectors 49
18. Specifications for rotary selectors 51
19. Specifications for slide switches 53
20. Specifications for toggle switches 55
21. Display types to which general guidelines for electronic visual displays apply 59
22. Minimum character sizes for some color discriminations 64
23. Minimum character sizes for legibility and readability 68
24. Specifications for graduation marks 76
25. Character sizes and separations for counters. 92
26. Minimum character sizes for head-up displays. 100
27. Size coding of indicator lights 110
28. Strengths and weaknesses of nonspeech auditory displays 119

Table Page

VOLUME I: GUIDELINES FOR AHS DESIGNERS (CONTINUED)

29. Heights of label characters 135
30. Hierarchical-labels character heights: component labels 137
31. Hierarchical-labels character heights: subsystem/functional group labels 138
32. Hierarchical-labels character heights: system/workstation labels 138
33. Maximum menu hierarchy breadth 154
34. System response times 159
35. Acceleration distances for three vehicle types 167
36. Distances for three vehicle types to decelerate to 0 km/h and 48.3 km/h (30 mi/h) 168
37. Between-barriers gap sizes to allow vehicles traveling under automated control under ideal conditions to pass through 170
38. Controls tradeoffs 173
39. Controls: when to use 176
40. Priority use rankings of controls 178
41. Displays tradeoffs 181
42. Displays: when to use 187

VOLUME II: USER-SYSTEM TRANSACTIONS

1. Distinguishing features of the three scenarios 2
2. System check-in for the Free Agency/Self-Contained Scenario 5
3. Events affecting automation. 5
4. Collision warning/avoidance for the Free Agency/Self-Contained Scenario 6
5. Setting speed and setting gap for the Free Agency/Self-Contained Scenario 7
6. Changing lanes for the Free Agency/Self-Contained Scenario 8
7. When the automated highway ends for the Free Agency/Self-Contained Scenario 8
8. Discontinuing the use of automation for the Free Agency/Self-Contained Scenario 9

LIST OF TABLES (CONTINUED)

Table | Page

VOLUME II: USER-SYSTEM TRANSACTIONS (CONTINUED)

9. Entry into the system for the Barriers on the Highway with Grouped Vehicles Scenario 15
10. Entry into an automated lane for the Barriers on the Highway with Grouped Vehicles Scenario 20
11. Moving in an automated lane for the Barriers on the Highway with Grouped Vehicles Scenario 21
12. Exiting the automated lane for the Barriers on the Highway with Grouped Vehicles Scenario 26
13. Entry into the system for the Segregated Highway with Individual Vehicles Scenario 32
14. Entry into an automated lane for the Segregated Highway with Individual Vehicles Scenario 34
15. Moving in an automated lane for the Segregated Highway with Individual Vehicles Scenario 35
16. Exiting the automated lane for the Segregated Highway with Individual Vehicles Scenario 40

Part I: Introduction

Why Human Factors?

A considerable amount of information about the effects on performance of vision, hearing, anthropometrics (body measurement data, both static and dynamic), user characteristics (age, gender, etc.), and the environment exists in the literature, and systems that are designed to integrate human capabilities and limitations into the design have a reduced potential for human error, improved system performance, and reduced training costs. Nevertheless, this information typically does not drive the design of systems or even influence system design decisions, despite evidence that the high incidence of human error in system operation is a direct function of the extent to which the system was designed without consideration of the personnel who use and maintain it.(1) There are at least two potential reasons for this failure to use the human factors literature in the system design process:

- The common misconceptions that humans are sufficiently flexible to compensate for design inefficiencies, that the system will compensate for the effects of personnel deficiencies, and that good engineering practice already considers the role of the human, and therefore no specialized human factors knowledge is necessary.(2)
- System designers and engineers are in fact rarely even exposed to this type of information. A recent study that examined over 200 engineering textbooks, publications, and handbooks published over the nearly 50-year period from 1938 to 1987, revealed that less than 21 percent of the documents had any mention of design issues involving human factors, or had any mention of human engineering issues.(3) Where they were mentioned, in many cases consideration of human factors issues was limited to one- or two-paragraph overviews.

Human factors is concerned with applying scientific data and principles of human performance to the design of systems and elements within those systems (e.g., controls, displays) to match the capabilities and limitations of the human user. The objectives of this human-centered design process are to maximize the effectiveness and efficiency of system performance, to ensure a high level of safety, and to maximize user acceptance. These objectives are achieved by systematically applying relevant information and principles about human abilities, characteristics, behavior, and limitations to specific design problems. The objective of this handbook is to provide a source document for automated highway system (AHS) designers that will facilitate a human-centered design process for the AHS.

It is to be noted that this is a preliminary handbook. Specifically in the area of operational guidelines (chapter 10), substantially more research and analysis will be required to confirm the validity of the guidelines presented and to develop additional guidelines.

The System Design Process

Figure 1 shows the major steps involved in the system design process, and table 1 shows where the relevant information for AHS design can be found.

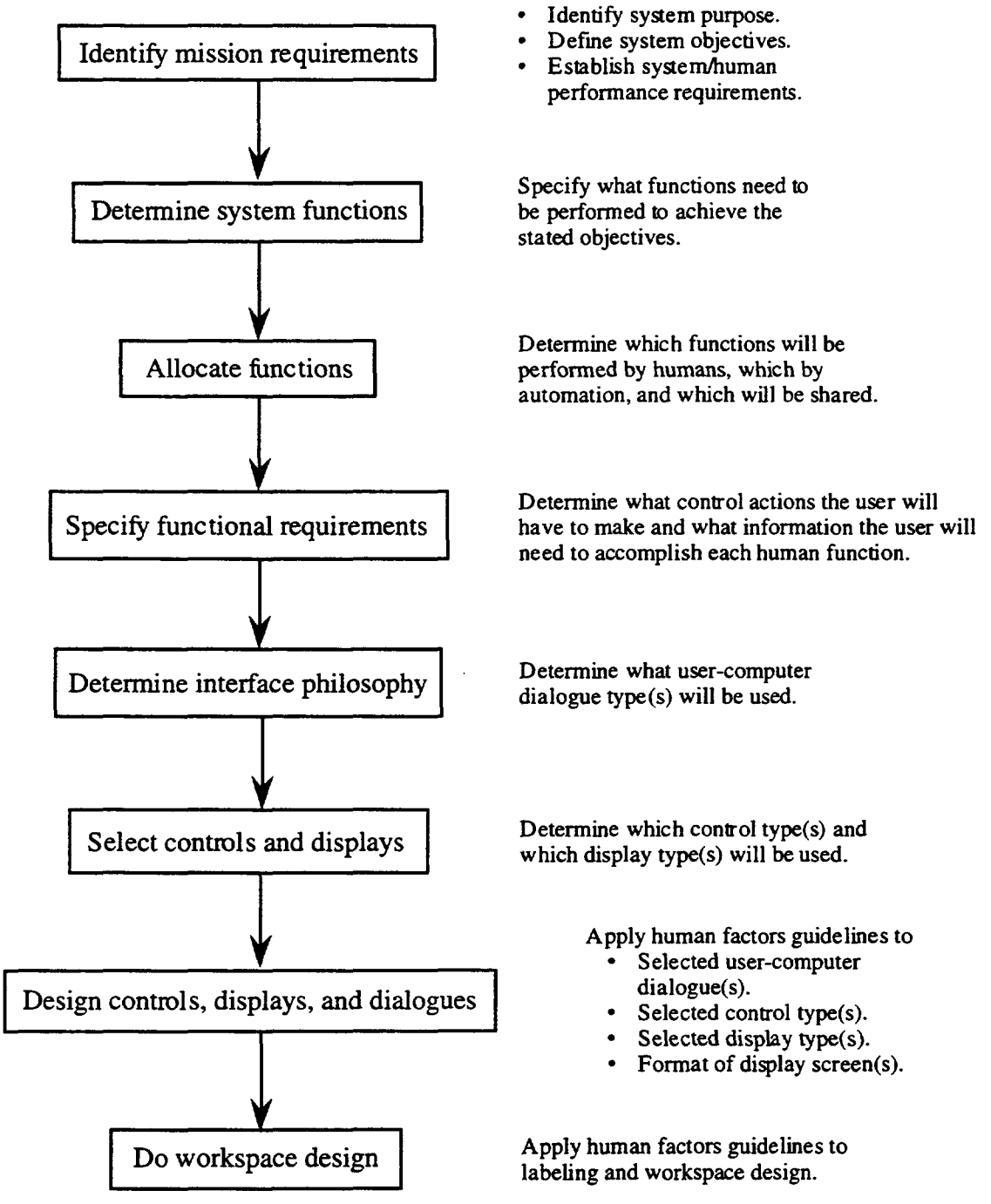

Figure 1. Major steps in the system design process.

- Identify mission requirements. The objectives of a system are not always well defined, and this can lead to inadequate or inappropriate design solutions. Specific information regarding system and human performance objectives, established during this step, will be used to evaluate the success of the final design.
- Determine system functions. A functional analysis indicates what capabilities the system must have to meet its objectives, but does not specify which agent will perform the function (the human or the automation) or how the function will be implemented. For the AHS, several scenarios were first developed to provide different frameworks that might satisfy the overall objectives of the automated highway system.(4) These scenarios show how the mission requirements might be accomplished given alternative designs varying in levels of automation and highway configuration (separation of automated traffic from manual traffic, grouped vs. individual vehicles, etc.). Analysis of the scenarios led to the development of a list of functions needed to support the various activities included in them.
- Allocate functions. The allocation of functions involves, in general, two activities: assessing the relative abilities of the human and the automation to perform each function, and assessing the workload associated with each function to ensure that acceptable performance is achieved. Based on these considerations, each function is assigned to the automation or to the human (or it might be recommended that responsibility for some functions be shared). (It should be noted that other factors, like cost, might influence the allocation decision; the method presented is based only on human factors considerations.) Since there are different visions of what the AHS might look like (i.e., the scenarios), the allocation of functions may differ across those visions. For example, a scenario that envisions an early implementation of an AHS might allocate lane changing to the human, while a scenario that envisions a later implementation might allocate that same function to the automation. In any case, data on human vision, audition, cognitive processing, information storage, reaction time, and the like must be examined to ensure that the proposed allocation is compatible with human capabilities and limitations.
- Specify functional requirements. This entails describing at a high level what control actions the user will have to make and what information he/she will need to accomplish each of the functions allocated to the human. These requirements are specified at a level that neither demands particular control or display choices nor excludes particular control or display choices.
- Determine interface philosophy. At this step, a decision is made as to how, in general, the user will interact with the system. This choice is made from a variety of dialogue types (e.g., menu selection, command language) and is based on such things as whether the user is considered to be casual or expert and how much training the user can be expected to have.
- Select controls and displays. The first activity is to define the human task sequences. For the AHS, the tasks might include steering, adjusting gap size, inputting a destination, and the like. For each task, the initiating condition(s), the cognitive component, and the outcome(s) are specified. The specific information that the user will need and the specific controls he/she will require to accomplish

each task are identified during this step. For example, if the user is going to steer his/her vehicle into an adjacent lane, he/she will need to know what the environmental conditions are, what the traffic conditions are, at what speed his/her vehicle is traveling, whether there are potential obstacles in the lane, and so on. Some of this information will come from direct observation, while other information (e.g., on obstacles) may come in part from onboard sensor systems' annunciations on a head up display. On the control side, the driver will use the turn signal indicator, steering wheel, brake, and accelerator to effect the change. For other functions/tasks (e.g., specifying one's destination), more of the information will be provided by AHS-specific displays in the vehicle, and more of the control actions will be accommodated by AHS-specific controls. Choices of controls and displays are made in part based on "when to use" information such as that provided in this handbook.

- Design controls, displays, and dialogues. In this step, human factors guidelines are applied to the specific display type(s), control type(s), and user-computer dialogue type(s) selected for the particular AHS implementation, as well as general guidelines for user-computer interactions. These guidelines can be found in this handbook.
- Do workspace design. This involves determining the specific locations of displays and controls so as to produce an appropriate workflow within the physical constraints imposed by the workspace, as well as determining the dimensions of the workstation so as to accommodate the physical characteristics of the user population. In addition, principles about labeling, color use, functional grouping, and the like are applied during this step to ensure an interface that matches the capabilities and limitations of the user population. Again, the applicable guidelines can be found in this handbook.

Although the process has been shown and discussed as if it were linear, it is in fact typically not. Rather, there are often modifications to earlier steps as the design team gains information from later steps, and the final design is the evolutionary product of often-significant iteration of the system design steps. Following the design process, there is typically a test and evaluation phase during which the design is subjected to critical analysis—perhaps in some combination of simulator and road tests—to determine whether it in fact meets the stated requirements.

Table 1. Where to find information needed for AHS design.

System Design Process Step (see figure 1)	Where to Find the Information
Identify Mission Requirements	First-generation scenarios from this contract and from the National Automated Highway System Consortium.[4,5]
Determine System Functions	Preliminary definition of AHS functions from this contract.
Allocate Functions	Allocation of AHS functions from this contract. *(Table continued on next page.)*

Table 1. Where to find information needed for AHS design (continued).

System Design Process Step (see figure 1)	Where to Find the Information
Specify Functional Requirements	For preliminary information and control requirements, user-system transactions in volume II of this handbook; for detailed information and control requirements, task analysis from this contract.
Determine Interface Philosophy	For when to use the user-computer dialogue types discussed in this handbook, guidelines 432, 448, and 472.
Select Controls and Displays	For when to use the control and display types discussed in this handbook, tables 39 and 42.
Design Controls, Displays, and Dialogues	For guidelines on controls, chapters 3 and 4; for guidelines on displays, chapters 5 and 6; and for guidelines on user-computer dialogues, chapter 9.
Do Workspace Design	For reach distances, chapter 2; for workspace design, chapter 7; and for labeling, chapter 8.

Applying the Guidelines

In the literature, guidelines are often either too general or too specific, and as a consequence need to be adapted by the designer to a particular situation. Every effort has been made in this handbook to select, for a given topic area, only those guidelines that apply to the AHS, and to ensure that guidelines are worded so as to apply specifically to the AHS (by removing references that are clearly irrelevant for the AHS and/or by using the appropriate data to make a general guideline into an AHS-specific guideline). In addition, where original guidelines have been written, they have been written to be AHS specific.

Although the intent is for these guidelines to be applied early in the design process (see figure 1), they can also be used to evaluate alternative system designs. When used as an evaluation tool, they can ensure AHS component systems conform to established principles, and can expose problem areas simply and quickly. This type of feedback can help AHS designers determine how existing or proposed designs may be improved or modified.

Structure of the Rest of the Handbook

There are two volumes to this handbook:

- Volume I, part II provides the human factors guidelines for controls and displays to be used on the AHS, and is divided into several chapters:
  - Chapter 1 provides an introduction to user-system transactions. These show the control actions the user will have to make and the information that will have to be provided to allow the user to carry out each activity on the automated highway system. These transactions form the foundation for an analysis of specific screen content and specific control types to be used on the AHS to accomplish each function.

- Chapter 2 shows the characteristics of the AHS user population along various dimensions (e.g., audition, vision). These data were used where appropriate to tailor guidelines to the automated highway system.
- Chapter 3 provides guidelines that are applicable to controls in general.
- Chapter 4 provides specific guidelines for each type of control selected for inclusion in the handbook. This chapter includes guidelines on the prevention of accidental actuation of controls.
- Chapter 5 provides guidelines that are applicable to electronic displays in general.
- Chapter 6 provides specific guidelines for each type of display selected for inclusion in the handbook.
- Chapter 7 provides guidelines for designing workspaces.
- Chapter 8 provides guidelines for the labeling of controls and other workspace elements.
- Chapter 9 provides guidelines for the user-computer dialogue types that were selected for inclusion in the handbook, and guidelines for system responsiveness to user commands.
- Chapter 10 provides operational guidelines derived from the comparable systems analysis and from experiments conducted as part of this contract.[5,6]
- Appendix A discusses how the controls for which guidelines have been written were chosen from among the larger group of possible controls.
- Appendix B discusses how the display types for which guidelines have been written were chosen from among the larger group of possible display types.

- Volume II shows complete user-system transactions. For the various phases of entering, driving on, and exiting the AHS, the conditions that initiate a driver action, the processing the driver does on that information, and the driver's responses are provided.[4]

Part II: Guidelines for Controls and Displays for Use on the Automated Highway System

Chapter 1. Introduction to the User-System Transactions

In volume II of the handbook are high level transactions between the user and the system for various phases of AHS driving for each of three scenarios.[4] These transactions show the input to a driver action, how the driver processes the input, and the driver's response to the input (i.e., the output of the transaction). The present chapter is an introduction to those transactions.

Overview of an Automated Highway System

Although there are many visions of what the automated highway system will be like, they share many features in common. The central concept is for an automated system(s) to control some aspects of the driving task, typically steering, braking, and accelerating. In addition, depending upon the level of automation, the system will provide either a collision warning so the driver can take evasive action, or will do automated collision avoidance. In projected early implementations of the automated highway system, all automated control will reside solely on the vehicle. In later implementations, automated control will reside on the vehicle, and a roadside system will coordinate the activities of all vehicles on the system.

Seven visions, or scenarios, have been formally developed as part of this contract to define the human factors aspects of the automated highway system. The National Automated Highway System Consortium (NAHSC) has taken a different approach, choosing to identify key attributes of an AHS rather than defining specific scenarios. Brief descriptions of the scenarios and key attributes are presented in the subsections that follow.

AHS Scenarios Developed for This Contract

- Free Agency/Self-Contained. All control systems are on the vehicle, which will allow automated collision warning/avoidance, speed control, and lane tracking. Lane changing will be done manually. Mixed manual and automated traffic will be in all lanes. Navigation will not be done by the AHS.
- No Barriers on the Highway with Individual Vehicles. The roadside system will set minimum gaps and maximum speeds for each vehicle, and coordinate activities among vehicles. Lane keeping, collision avoidance, and navigation to a driver-selected destination will be located on the vehicle. A transition lane will separate manual from automated lanes, and will be used to transfer control from the driver to the AHS prior to entry to an automated lane and from the AHS to the driver after

exit from an automated lane. Lane selection will be by the driver; the lane change will be executed by the vehicle when commanded by the roadside system.

- No Barriers on the Highway with Grouped Vehicles. This is essentially the same as the immediately preceding scenario, with the difference being that maneuvers in an automated lane will be by groups of vehicles rather than individual vehicles. The roadside system will coordinate group activities.
- Barriers on the Highway with Individual Vehicles. A transition lane will separate manual from automated lanes, and will be used to transfer control from the driver to the AHS prior to entry to an automated lane and from the AHS to the driver after exit from an automated lane. Barriers with gaps between them will separate the transition lane from the automated lane, and will separate automated lanes. The roadside system will set minimum gaps and maximum speeds for each vehicle; the vehicle will do lane keeping, collision avoidance, and navigation to a driver-selected destination. Lane selection will be by the roadside system, with the vehicle executing the change.
- Barriers on the Highway with Grouped Vehicles. This is essentially the same as the immediately preceding scenario, with the differences being that vehicles will enter and exit automated lanes in groups, and maneuvers in an automated lane will be by groups of vehicles rather than individual vehicles. The roadside system will coordinate group activities.
- Segregated Highway with Individual Vehicles. Automated lanes will be physically separated from manual lanes; there is no transition lane in this scenario. Entrance to an automated lane will be via an automated entrance ramp. The roadside system will set minimum gaps and maximum speeds for each vehicle, while the vehicle will do lane keeping, collision avoidance, and navigation to a driver-selected destination. Lane selection will be by the roadside system, with the vehicle executing the change.
- Segregated Highway with Grouped Vehicles. This is essentially the same as the immediately preceding scenario, with the differences being that vehicles will enter and exit automated lanes in groups, and maneuvers in an automated lane will be by groups of vehicles rather than individual vehicles. The roadside system will coordinate group activities.

Key AHS Attributes Identified by the National Automated Highway System Consortium

The National Automated Highway System Consortium has identified six key attributes of an automated highway system:

- Dedicated lanes only or mixed traffic operations. With dedicated lanes, a continuous barrier would separate the automated traffic from the manual traffic.
- Deployment sequence and timing. Starting with adaptive cruise control—which would maintain both a set speed and a set intervehicle gap—and warning systems,

the issue is then how deployment would continue: would it be by dedicating a lane for fully automated vehicles, by adding capabilities toward full automation in mixed traffic, by dedicating a lane for use by partially automated vehicles, or in some other way?

- Distribution of intelligence and communication links. The key questions are where the decisions are made (e.g., by each vehicle independently, by vehicles sharing information with each other, by an intelligent roadside system) and "who" communicates information to "whom."
- Automated travel by individual vehicles or by groups of vehicles.
- Obstacle detection/avoidance or exclusion. To exclude obstacles from the roadway, barriers, fences, and the like would be constructed, and perhaps the roadway would even be covered to exclude airborne obstacles.
- Driver role when the vehicle is under automated control. Possibilities include allowing the driver to override automated control at any time, allowing the driver to override automated control under some conditions, and not allowing the driver to override automated control except in an emergency.[7]

Elements of a Transaction

An example transaction is shown in table 2. In that transaction, the driver decides to request an immediate exit from an automated lane. The generic features of transactions illustrated by the example are as follows:

- The transaction starts with information provided by the system.
- There is a "give and take" between the user and the system. The user performs some control action based on the system's input. In turn, the system provides new information, which is typically the precursor to further action by the user. The information provided might concern vehicle and/or system status (e.g., notification that an exit is closed due to an accident), a request for driver action (e.g., to confirm the driver's previous response), some type of alarm, or other information.
- There is often branching, where a given input can lead to multiple possible outputs (as shown in table 2) or where a given output can lead to multiple succeeding inputs.

Note also that the transactions do not indicate what specific controls are to be used, what specific information is to be presented, what display medium is to be used, how the information is to be formatted (including location on an electronic display surface, color use, etc.), and so on. Neither do the transactions exclude any particular control types, display media, and the like. Rather, they are written at a high level to show functionality and to form the basis for the next step in the design process.

Table 2. Example user-system transaction.

Input	Processing	Output
	REQUEST IMMEDIATE EXIT	
[8] The system displays information about traffic, accidents, and weather; time passes; and so on.	[8] The driver decides to request an immediate exit.	[8] The driver requests an immediate exit.
[8] The system displays the request for immediate exit and requests confirmation.	[8] The driver receives the message and decides whether to confirm the request.	[8] The driver confirms the request for immediate exit. [9] The driver denies the request for immediate exit. *(END)*

Use of the Transactions in System Design

The transactions result from the "specify functional requirements" step of the system design process (see figure 1). After a decision has been made as to how the user will interact with the system (e.g., using a menu selection scheme)—that is, what is the interface design philosophy—the transactions are used as the basis for a detailed task analysis as the first part of the "select controls and displays" step. During that step, for each user action in each transaction, the following are specified: the inputs to the user that initiate the action, the cognitive processing the user does on the inputs, and the outputs from the user (i.e., what is done in response to the inputs). The inputs are specified precisely in this step (e.g., if the input is some displayed information, the specific form—perhaps visual— and content of the information are stated), as are the outputs (e.g., the specific control used—perhaps a pushbutton—is stated). Given that the dialogue type has been selected and it has been decided what controls and displays to use, the human factors guidelines in this handbook are applied in the "design controls, displays, and dialogues" step of the process. Following this, the handbook guidelines on labeling and workspace design are applied in the final step of the design process.

Thus, the user-system transactions are a critical foundation for determining the specific form of the interface between the user and the system. If the system is to meet its objectives (from the "identify mission requirements" step in the design process), then the functional requirements stated in the transactions must be satisfied.

Chapter 2. Population Characteristics

As stated in volume I, part I of the handbook, human factors "... is concerned with ... the design of systems ... to match the capabilities and limitations of the human user." Thus, at the outset, it is important to know what are those capabilities and limitations so the system design can be tailored to the needs of its users. Table 3 presents information about the intended automated highway system user population for key variables. This information should be treated as boundary conditions for the design of the AHS, and used where appropriate in the design process.

Table 3. Selected characteristics of the automated highway system user population.

Characteristic	Population Data	Comment
Age: legal driving age	≥16 years	
SIZES		
Males, Ages 17 to 51[8,9]		
Standing height (figure 2, ¿)	• Street clothes: 186.4 cm (73.4 in). • Winter clothes: 191.5 cm (75.4 in).	All data for males, ages 17 to 51 are 95th percentile, and are adjusted for clothing and slump.
Seated height (figure 2, ¡)	• Street clothes: 93.8 cm (36.9 in). • Winter clothes: 99.3 cm (39.1 in).	
Seated eye height (figure 2, ¬)	• Street clothes: 81.4 cm (32.0 in). • Winter clothes: 87.0 cm (34.2 in).	
Seated midshoulder height (figure 2, √)	• Street clothes: 69.2 cm (27.2 in). • Winter clothes: 72.7 cm (28.6 in).	
Seated elbow rest height (figure 2, *f*)	• Street clothes: 28.9 cm (11.4 in). • Winter clothes: 32.5 cm (12.8 in).	
Males, Ages ≥70[9,10]		
Standing height (figure 2, ¿)	• Street clothes: 176.3 cm (69.4 in). • Winter clothes: 181.4 cm (71.4 in).	All data for males, ages ≥70 are 95th percentile, and are adjusted for clothing and slump.
Seated height (figure 2, ¡)	• Street clothes: 89.8 cm (35.4 in). • Winter clothes: 95.4 cm (37.6 in).	
Seated midshoulder height (figure 2, √)	• Street clothes: 70.6 cm (27.8 in). • Winter clothes: 74.2 cm (29.2 in).	
Seated elbow rest height (figure 2, *f*)	• Street clothes: 28.4 cm (11.2 in). • Winter clothes: 32.0 cm (12.6 in).	*(Table continued on next page.)*

Table 3. Selected characteristics of the automated highway system user population (continued).

Characteristic	Population Data	Comment
SIZES (continued)		
Females, Ages 17 to 51[8,9]		
Standing height (figure 2, ¿)	• Street clothes: 153.3 cm (60.4 in). • Winter clothes: 160.4 cm (63.2 in).	All data for females, ages 17 to 51 are 5th percentile, and are adjusted for clothing and slump.
Seated height (figure 2, ¡)	• Street clothes: 76.9 cm (30.3 in). • Winter clothes: 83.5 cm (32.9 in).	
Seated eye height (figure 2, ¬)	• Street clothes: 65.8 cm (25.9 in). • Winter clothes: 72.4 cm (28.5 in).	
Seated midshoulder height (figure 2, √)	• Street clothes: 54.8 cm (21.6 in). • Winter clothes: 57.1 cm (22.5 in).	
Seated elbow rest height (figure 2, *f*)	• Street clothes: 18.5 cm (7.3 in). • Winter clothes: 20.8 cm (8.2 in).	
Females, Ages ≥70[9,10]		
Standing height (figure 2, ¿)	• Street clothes: 141.0 cm (55.5 in). • Winter clothes: 148.1 cm (58.3 in).	All data for females, ages ≥70 are 5th percentile, and are adjusted for clothing and slump.
Seated height (figure 2, ¡)	• Street clothes: 68.7 cm (27.1 in). • Winter clothes: 75.3 cm (29.7 in).	
Seated elbow rest height (figure 2, *f*)	• Street clothes: 17.1 cm (6.8 in). • Winter clothes: 19.4 cm (7.7 in).	*(Table continued on second page following.)*

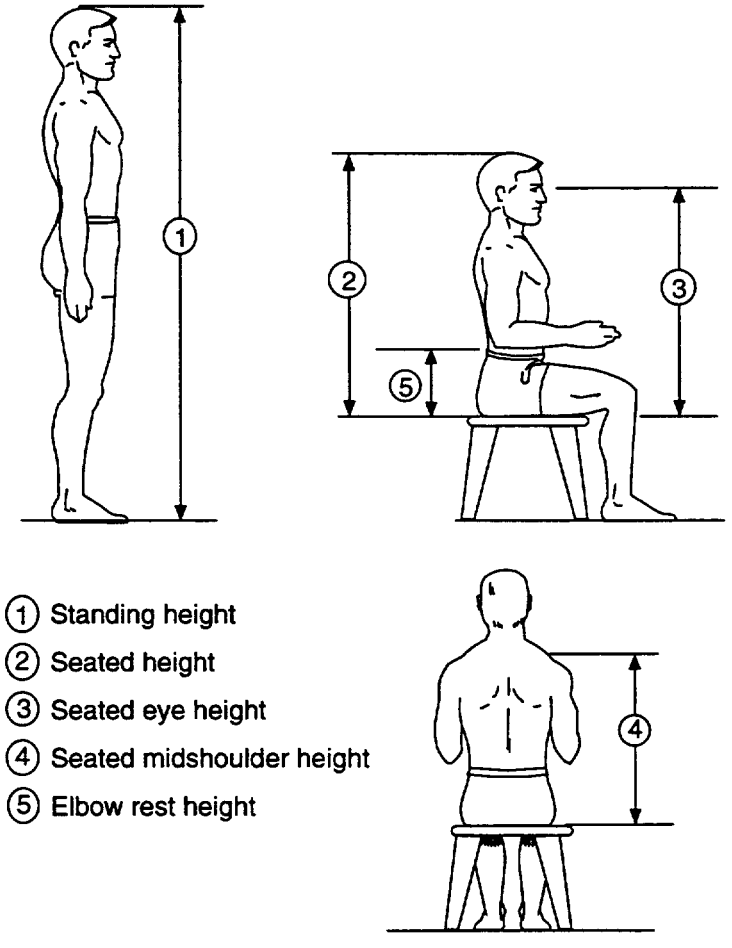

Figure 2. Reference figures for user population sizes.

Table 3. Selected characteristics of the automated highway system user population (continued).

Characteristic	Population Data	Comment
	AUDITION[11]	
	Males	
Hearing threshold level (as compared with audiometric zero) • 500 Hz • 1,000 Hz • 2,000 Hz • 3,000 Hz • 4,000 Hz • 6,000 Hz	 • ≥26 dB (5.0 percent) • ≥26 dB (5.8 percent) • ≥46 dB (5.2 percent) • ≥66 dB (4.5 percent) • ≥76 dB (3.8 percent) • ≥76 dB (7.4 percent)	Data are for the worse of the left and right ears. Data in the reference report are shown as percentages of the sample with hearing threshold levels in each of several ranges (e.g., 26 to 35 dB) compared with audiometric zero, for each ear separately. The nearest datum to a 5th percentile was chosen for each ear. The data provided here are for the worse ear at each frequency. Where the hearing threshold levels are the same for the two ears, the datum shown is for the sample percentage closer to 5 percent. The numbers in parentheses are the percentage of the sample with the hearing threshold levels shown. These data were used because they are from a sample where people were not rejected on the basis of otological disease or other such criteria, they covered an appropriate frequency range (based on the recommended range for nonspeech auditory displays), and they represented a reasonable age range (18 to 79).
	Females	
Hearing threshold level (as compared with audiometric zero) • 500 Hz • 1,000 Hz • 2,000 Hz • 3,000 Hz • 4,000 Hz • 6,000 Hz	 • ≥26 dB (5.2 percent) • ≥26 dB (5.0 percent) • ≥36 dB (4.6 percent) • ≥46 dB (4.5 percent) • ≥56 dB (3.5 percent) • ≥56 dB (7.6 percent)	Data are for the worse of the left and right ears. Data in the reference report are shown as percentages of the sample with hearing threshold levels in each of several ranges (e.g., 26 to 35 dB) compared with audiometric zero, for each ear separately. The nearest datum to a 5th percentile was chosen for each ear. The data provided here are for the worse ear at each frequency. Where the hearing threshold levels are the same for the two ears, the datum shown is for the sample percentage closer to 5 percent. The numbers in parentheses are the percentage of the sample with the hearing threshold levels shown. *(Table continued on next page.)*

Table 3. Selected characteristics of the automated highway system user population (continued).

Characteristic	Population Data	Comment
AUDITION (continued)		
Females (continued)		
		These data were used because they are from a sample where people were not rejected on the basis of otological disease or other such criteria, they covered an appropriate frequency range (based on the recommended range for nonspeech auditory displays), and they represented a reasonable age range (18 to 79).
VISION (See references 12,13,14,15,16.)		
Static acuity (Snellen)	20/40 will allow unrestricted driving in all States.	A person with a Snellen acuity of 20/20 can read a target (e.g., state what letter it is) that subtends 1 min of arc at a distance of 6.1 m (20 ft). At 6.1 m (20 ft), a person with a Snellen acuity of 20/40 can read only a target that subtends 1 min of arc at 12.2 m (40 ft). The latter target subtends 2 min of arc at 6.1 m (20 ft).[12]
Horizontal movements • Eye rotation only, around a line straight ahead. • Head rotation only, around a line straight ahead. • Head plus eyes, around a line straight ahead.	• Optimal: ±15°. • Maximum: ±35°. • Easy: ±45°. • Maximum: ±60°. • Easy: ±60°. • Maximum: ±95°.	
Vertical movements • Eye rotation only, around the horizontal. • Head rotation only, around the horizontal. • Head plus eyes, around the horizontal.	• Optimal: Horizontal to 30° below horizontal. • Maximum: 25° above horizontal to 35° below horizontal. • Easy: ±30°. • Maximum: ±50°. • Easy: ±45°. • Maximum: 95° above horizontal to 115° below horizontal.	
Binocular fields of view • Around a line straight ahead. • Around the horizontal.	• Right eye: 90° to the right, 60° to the left. • Left eye: 90° to the left, 60° to the right. • Both eyes together: ±60°. • 50° to 55° above horizontal . • 60° to 70° below horizontal.	*(Table continued on next page.)*

Table 3. Selected characteristics of the automated highway system user population (continued).

Characteristic	Population Data	Comment
	REACH(17)[1]	
Functional reach, normal (furthest extent of the reach envelope, driver sitting upright, seat back upright, without moving from against the seat back)	64.0 cm (25.2 in)	This is measured from the back of the right shoulder to the tip of the right thumb, with the tip of the index finger touching the pad of the thumb; both shoulders are held against the wall. The datum is for the 5th percentile female.
Functional reach, extended (furthest extent of the reach envelope, driver sitting upright, seat back upright, moving one shoulder while keeping the other shoulder in contact with the seat back)	73.4 cm (28.9 in)	This is measured from the back of the right shoulder to the tip of the right thumb, with the tip of the index finger touching the pad of the thumb; the left shoulder is against the wall, the right shoulder is extended as far as possible. The datum is for the 5th percentile female.
Elbow to grip length (normal grip radius for frequently used, precise-adjustment controls)	29.5 cm (11.6 in)	This is measured from the tip of the elbow to the center of the hand, with the upper arm vertical and a 90° angle at the elbow. The datum is for the 5th percentile female.
Functional reach, normal, as a function of height above the sitting surface	See figure 3 below.	
Change in functional reach as a function of change in seat back angle	See table 4 below.	
	STRENGTH(19)	
Two handed rotational force applied to a steering wheel	• Moving vehicle, surprise loss of power assistance: 76.1 N (17.1 lbf) • Moving vehicle, forewarned loss of power assistance: 86.8 N (19.5 lbf)	Data are for the 5th percentile female.
Foot push (brake pedal)	• Moving vehicle, surprise loss of power assistance: 287.5 N (64.6 lbf) • Moving vehicle, forewarned loss of power assistance: 368.9 N (82.9 lbf)	Data are for the 5th percentile female. *(Table continued on second page following.)*

[1] Context-specific reach data depend to a large extent on the specific geometry of the vehicle being considered as the workspace for a particular design. Such factors as vehicle body type (e.g., sports car, station wagon, light truck), seat position (i.e., location along its track), seat back angle, seat elevation, and so on, have a significant impact on reach in relation to a fixed reference point in the vehicle. Providing reach data for all combinations of those factors seemed unreasonable, as did trying to select combinations that were representative of the population of geometries. The Society of Automotive Engineers provides reach data based on vehicle cockpit geometries and a methodology for using the data.(16)

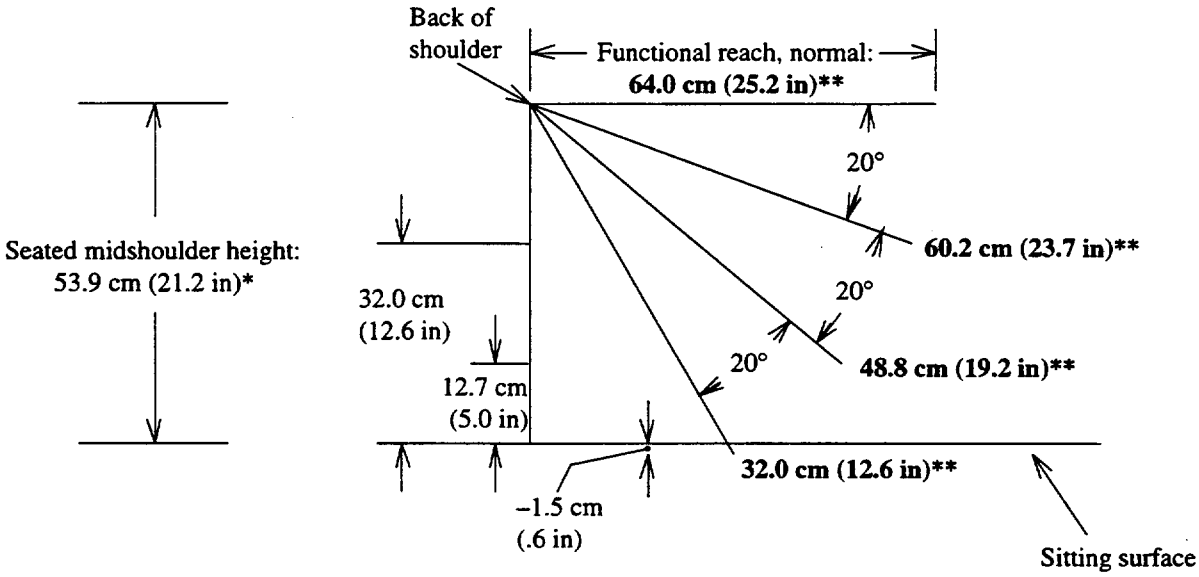

* Taken from the same source as used for functional reach, normal. This is *not* the source used for midshoulder height elsewhere in table 3.

** Forward reach at the height indicated above the sitting surface.

Figure 3. Functional reach as a function of height above the sitting surface.

Table 4. Change in reach as a function of change in seat back angle.[18]

Direction of Arm Reach (0° = straight ahead; 90° = arm to the right)	Approximate Change in Reach for Each 1° Change in Seat Back Angle (as the seat back moves away from the vertical, reach decreases by the amount shown; as the seat back moves towards the vertical, reach increases by the amount shown)
0°	1.02 cm (.40 in)
15°	1.27 cm (.50 in)
30°	1.14 cm (.45 in)
45°	.94 cm (.37 in)
60°	.66 cm (.26 in)
75°	.36 cm (.14 in)
90°	.25 cm (.10 in)

Table 3. Selected characteristics of the automated highway system user population (continued).

Characteristic	Population Data	Comment
	FOOT REACTION TIMES[20,21]	
Braking, simple reaction time • Auditory stimulus • Visual stimulus	 • 879 ms • 1,314 ms	Simple reaction time was in response to a forewarned auditory stimulus (simple tone) or visual stimulus (red light). The foot was on the accelerator at the time the stimulus was presented. Data shown are combined 95th percentile primary + secondary reaction times. Primary reaction time is the interval between stimulus onset and removal of the foot from the accelerator. Secondary reaction time is the interval between removal of the foot from the accelerator and operation of the brake.
Braking, choice reaction time • Auditory stimulus • Visual stimulus	 • 1,359 ms • 1,575 ms	Choice reaction time was in response to an auditory stimulus (simple tone) or visual stimulus (red light) presented randomly among four stimulus types total: the red light, the tone, and left- and right-pointing arrows. The arrows required the driver to turn in the indicated direction, not to brake. Data shown are combined 95th percentile primary + secondary reaction times. Primary reaction time is the interval between stimulus onset and removal of the foot from the accelerator. Secondary reaction time is the interval between removal of the foot from the accelerator and operation of the brake.
Braking, perception-reaction time • Mean (standard deviation). • 85th percentile.* • Longest observed out of 116 subjects. • American Association of State Highway and Transportation Officials design standard.	 • 1.5 s (.4 s) • 1.9 s • 2.54 s • 2.5 s**	Perception-reaction time is the time it takes to perceive a stimulus, interpret it, decide what response to make, and initiate that response. In this study, the stimulus was the unannounced, sudden appearance of an object rolling toward the roadway. *(Table continued on next page.)*

* The 85th percentile perception-reaction time is "... often used for developing highway design values."[20, p. 208]

** It is recommended that the 2.5 s perception-reaction time be used.

Table 3. Selected characteristics of the automated highway system user population (continued).

Characteristic	Population Data	Comment
	HAND REACTION TIMES[21]	
Steering, simple reaction time	498 ms	Simple reaction time was the time to start turning the steering wheel in response to a forewarned visual stimulus (directional arrow). The datum is the worse of the 95th percentile left- or right-arrow responses.
Steering, choice reaction time	1,203 ms	Choice reaction time was in response to a visual stimulus (directional arrow) presented randomly. The datum is the worse of the 95th percentile left- or right-arrow responses.

Chapter 3. General Guidelines for Controls

In this chapter are guidelines intended to be used for all the controls included in the handbook, including a section on the prevention of accidental actuation. Guidelines specific to each control are in chapter 4.

1. CONTROL SELECTION FACTORS:

   Control selection should consider the following factors:

   a. **The type of control selected and its location in the workspace should be compatible with applicable 5th-percentile-female through 95th-percentile-male body dimensions and with 5th-percentile-female strength.**

   b. **Controls should be selected and distributed in the workspace so that none of the user's limbs is overburdened.**

   c. **Hand manipulation is more precise than foot manipulation.**

   d. **Where right-handed manipulation of a control could create difficulties for a left-handed user, the control should be selected and located to minimize degradation for both right- and left-handed users.**

   e. **Allowances for special clothing (e.g., gloves) should be included.**

   f. **The control should act as if it were an extension of the user's limbs—it should be operable in terms of the natural motions of the arm, wrist, finger, leg, or foot. Control actions should not require awkward or unnatural positioning.**

   g. **The control interface should provide feedback so that the users know at all times what their control actions are accomplishing.**[10,14]

2. CONTROL MOVEMENT RECOMMENDATIONS:

   Control movements should conform to those shown in table 5 and figure 4.[10,22]

   Comment: More complete discussions of control movement recommendations can be found in references 10 (pp. 432 to 433) and 23 (pp. 89 to 90).

Table 5. Control movement recommendations.

To Do This	Move the Associated Control Like This
Turn a function ON	Up, right, forward, clockwise, pull
Turn a function OFF	Down, left, rearward, counterclockwise, push
Move the pointer on an associated display to the right	Clockwise, right
Move the pointer on an associated display to the left	Counterclockwise, left
Move the pointer on an associated display upward	Up, back
Move the pointer on an associated display downward	Down, forward
Cause an increase in the controlled function	Forward, up, right, clockwise
Cause a decrease in the controlled function	Rearward, down, left, counterclockwise
Cause the controlled object to retract	Rearward, pull, counterclockwise, up
Cause the controlled object to extend	Forward, push, clockwise, down

VS = a very strong stereotype.
VSR = a very strong stereotype when the control is mounted to the right of the steering wheel in a left-hand-drive vehicle.

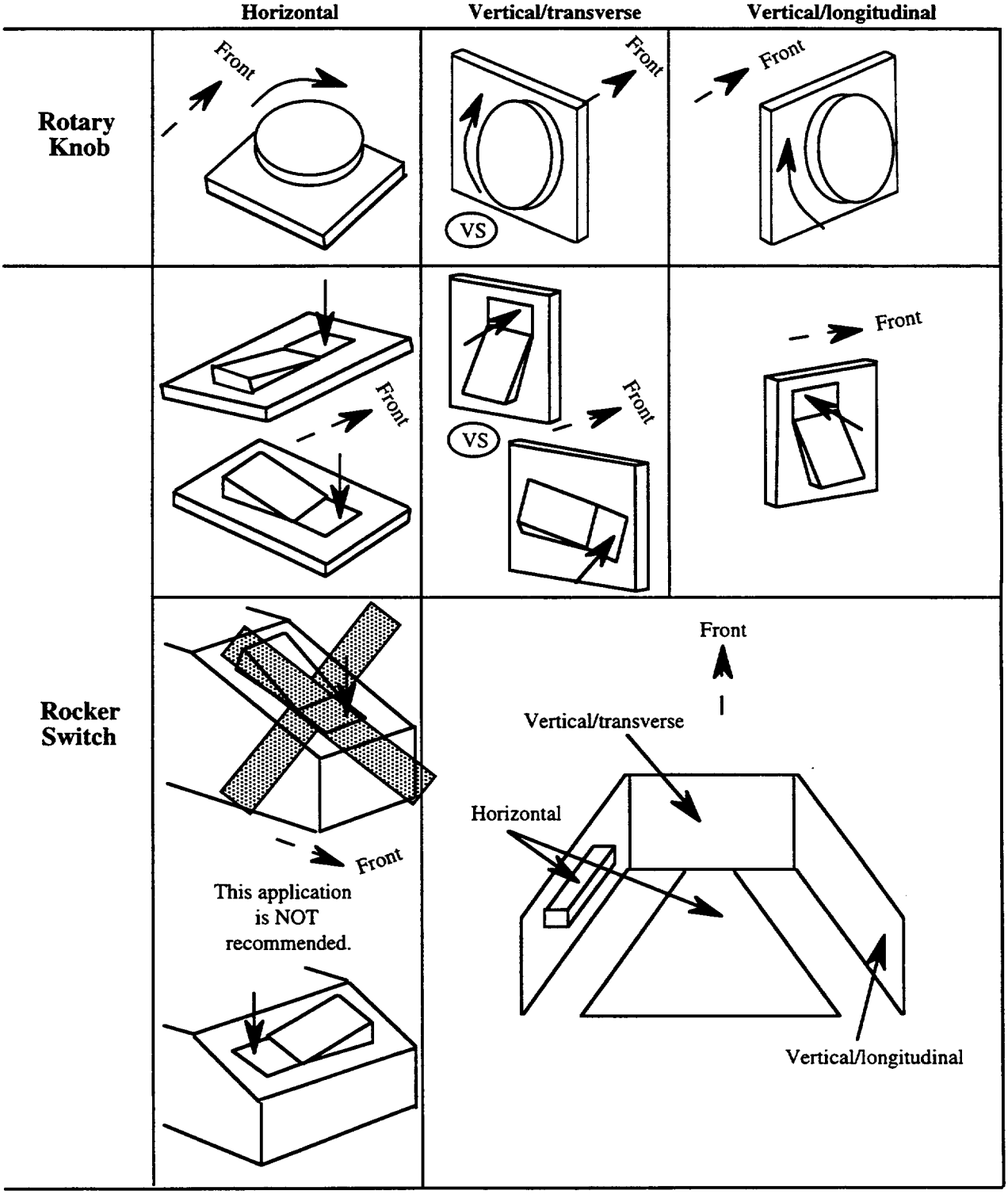

Figure 4. Some specific control movement recommendations for turning a device on or increasing a value.

VS = a very strong stereotype.
VSR = a very strong stereotype when the control is mounted to the right of the steering wheel in a left-hand-drive vehicle.

	Horizontal[1]	Vertical/transverse[1]	Vertical/longitudinal[1]
Thumbwheel	Front; VSR	Front; VS	Front
Toggle Switch	Front	Front; VS	Front; VS; This application is NOT recommended.
Slide Switch	Front	VS; Front; VSR	Front; VS

[1] See key on first page of figure.

Figure 4. Some specific control movement recommendations for turning a device on or increasing a value (continued).

3. MINIMUM CONTROLS SEPARATIONS:
Separations between adjacent controls should be as shown in table 6.[18,24]

Table 6. Minimum separation distances between controls.[1]

	Key Operated Switch	Knob	Legend Switch	Pushbut-ton	Rocker Switch	Rotary Selector	Slide Switch	Toggle Switch
Key Operated Switch	25 mm (1 in)	19 mm (.75 in)	25 mm (1 in)	13 mm (.5 in)	19 mm (.75 in)	19 mm (.75 in)	19 mm (.75 in)	19 mm (.75 in)
Knob	19 mm (.75 in)	25 mm (1 in)	50 mm (2 in)	13 mm (.5 in)	13 mm (.5 in)	25 mm (1 in)	13 mm (.5 in)	19 mm (.75 in)
Legend Switch	25 mm (1 in)	50 mm (2 in)	50 mm (2 in)	50 mm (2 in)	38 mm (1.5 in)	50 mm (2 in)	38 mm (1.5 in)	38 mm (1.5 in)
Pushbut-ton	13 mm (.5 in)	13 mm (.5 in)	50 mm (2 in)	13 mm (.5 in)	13 mm (.5 in)	13 mm (.5 in)	13 mm (.5 in)	13 mm (.5 in)
Rocker Switch	19 mm (.75 in)	13 mm (.5 in)	38 mm (1.5 in)	13 mm (.5 in)	13 mm (.5 in)	13 mm (.5 in)	13 mm (.5 in)	19 mm (.75 in)
Rotary Selector	19 mm (.75 in)	25 mm (1 in)	50 mm (2 in)	13 mm (.5 in)	13 mm (.5 in)	25 mm (1 in)	13 mm (.5 in)	19 mm (.75 in)
Slide Switch	19 mm (.75 in)	13 mm (.5 in)	38 mm (1.5 in)	13 mm (.5 in)	13 mm (.5 in)	13 mm (.5 in)	13 mm (.5 in)	19 mm (.75 in)
Toggle Switch	19 mm (.75 in)	19 mm (.75 in)	38 mm (1.5 in)	13 mm (.5 in)	19 mm (.75 in)	19 mm (.75 in)	19 mm (.75 in)	19 mm (.75 in)

[1] All distances are edge to edge separations with single controls in their closest positions, and are for bare-handed operation. Separation distances for gloved-hand operation are not available for all controls in the handbook. Where they are available, they are given in the guidelines for those specific controls, and they should be used instead of the separation distances for bare-handed operation.

Where blind reaching is required, and controls are in the optimum space, provide at least 127-mm (5-in) separation between controls positioned vertically with respect to each other; provide at least 203.2-mm (8-in) separation between controls positioned horizontally with respect to each other. At the periphery of the manual work area, separation between adjacent controls should be 304.8 mm (12 in).

Preventing Accidental Actuation of Controls

The guidelines in this section are generally applicable to the various control types covered in this handbook. Methods of preventing accidental actuation that are specific to particular control types are discussed in the sections on those controls.

4. CLEARANCES BETWEEN CONTROLS:
Sufficient clearance should be provided between adjacent controls, between controls and the adjacent structure, and between the user's own body and the equipment so that critical controls can be easily grasped and manipulated in the normal manner. Special attention must be

given to separating critical controls whose accidental operation could lead to loss of control or damage to a system.[10]

Comment: See table 6 for minimum separation distances between controls.

5. NONINTERFERENCE WITH CONTROL OPERATION TIME:
Any method of protecting a control from accidental actuation should not preclude operation within the time required.[13]

6. METHODS OF PREVENTING ACCIDENTAL CONTROL ACTUATION:
For situations in which controls must be protected from accidental actuation, one or more of the following methods, as applicable, should be used:

   a. **Locate and orient the control so that the user is not likely to strike or move it accidentally in the normal sequence of control movements. When reorienting the control, care should be taken to ensure that recommended direction-of-movement relationships are not violated (see table 5).**
   b. **Recess, shield, or otherwise surround the control by physical barriers. The control should be entirely contained within the envelope described by the recess or barrier. A disadvantage of surrounding the control with barriers is the amount of panel space that must be used.**
   c. **Cover or guard the control. However, if a control is to be operated frequently, protective covers or guards cannot be used. Also, when a cover is in its open position, it should not interfere with operation of the protected control or adjacent controls.**
   d. **Provide the control with interlocks so that extra movement (e.g., a side movement out of a detent position, a pull-to-engage clutch) or the prior operation of a related or locking control is required.**
   e. **Provide the control with resistance (i.e., viscous or coulomb friction, spring-loading, or inertia) so that definite or sustained effort is required for actuation.**
   f. **Provide the control with a lock to prevent the control from passing through a position without delay when strict sequential activation is necessary (i.e., the control is moved to only the next position, then is delayed). However, locking is undesirable if the control is to be used frequently.**
   g. **Design the control for operation by rotary action.**[13,25]

Table 7 shows recommended methods for preventing accidental actuation of the various control types in the handbook.

Table 7. Recommended methods for preventing accidental actuation of controls.

	Location	Orientation	Recessing, Shielding, or Barriers	Covering	Interlocking	Increased Resistance	Locking	Operation by Rotary Action
Rotary Selector	✓		✓	✓	✓		✓	✓
Knob	✓		✓	✓	✓	✓	✓	✓
Toggle Switch	✓	✓	✓	✓	✓		✓[1]	
Rocker Switch	✓	✓	✓	✓	✓	✓		
Joystick	✓		✓	✓	✓	✓		
Push-button	✓		✓	✓	✓	✓		
Foot Push-button	✓				✓	✓		
Legend Switch	✓		✓	✓	✓	✓		
Slide Switch	✓	✓	✓	✓	✓	✓	✓[2]	
Key Operated Switch	✓		✓	✓	✓		✓[3]	

[1] For three-position switches only.
[2] For switches with three or more positions only.
[3] Though they are recommended in the handbook for only two-position functions, reference 14 indicates they can be used for three-position functions also. Locking would be used only for three-position switches.

7. EMERGENCY CONTROL LOCATION:
   Emergency-function controls should be located where they can be identified and reached quickly. However, their location should not be such that accidental use or inadvertent contact could result in a serious system malfunction and/or ultimately injury to personnel.(14)

8. USE OF PROTECTIVE DEVICES FOR CONTROLS:
   Protective devices should not interfere with the normal operation of controls or the reading of associated displays.(26)

9. DESIGN OF CONTROLS COVERS AND GUARDS:
   Covers and guards should be designed to prevent accidental detachment.(26)

10. VISIBILITY OF COVERED CONTROLS:
    When a protective cover is used, control position should be evident without requiring cover removal.(26)

11. USE OF BARRIER GUARDS AS HANDHOLDS:

Accidental actuation of controls can result when barrier guards are used as handholds. Barrier guards should be designed and located so as to minimize this problem.[26]

Comment: This would seem most likely to occur upon entry to and exit from the vehicle, and this should be considered if barrier guards are used.

Chapter 4. Guidelines for Specific Controls

In this chapter are guidelines that are specific to each of the controls selected for the handbook. General guidelines applicable to all the controls in the handbook are in chapter 3.

Foot Pushbuttons

12. WHEN TO USE:

    Foot pushbuttons should be used only in those cases where the user is likely to have both hands occupied at the time the pushbutton is actuated, or where load-sharing among limbs is desirable. Because foot pushbuttons are susceptible to accidental actuation, their use should be limited to noncritical or infrequent operations, such as press-to-talk communications.[14]

13. USE OF GENERAL CONTROLS GUIDELINES:

    The design and use of foot pushbuttons should conform to the applicable general guidelines for controls that are in chapter 3.

14. LOCATION:

    A foot pushbutton should be located so that:

    a. **It can be operated by the toe or ball of the foot rather than by the heel. It should not be located so near an obstruction that the user cannot position the sole of the shoe squarely (centered) on the pushbutton. A pedal may be used atop the button to aid in locating and operating the switch.**

    b. **The user has some normal heel-resting position on the floor or a floor board. Avoid placing a foot pushbutton beneath or behind a pedal where it might be possible for the user's foot to become momentarily entangled or trapped during the transfer between the pushbutton and a pedal.**

    c. **Avoid placing a foot pushbutton where it might be stepped on and accidentally actuated, and/or where typical shifting from one foot control to another creates a high probability that the foot or clothing might be entrapped by an intervening control as the user shifts the foot from one control to another.**[14]

15. USE IN A WET ENVIRONMENT:

    When a foot pushbutton is used in an environment in which it may become wet and slippery, it should have a frictional surface to minimize the possibility of the foot slipping off it.[14]

16. INDICATION OF ACTUATION:

Resistance should start low, build up rapidly, then drop suddenly to indicate that the control has been actuated. A positive indication of control actuation should be provided: a snap feel (accomplished by the resistance just specified), an audible click, or associated visual or auditory display change.[14,25]

Comment: Reference 25 notes the possibility of environmental noise masking an audible click. This is certainly relevant for the AHS environment, where there are several possible sources of noise (e.g., radio, blower fan, conversation).

17. SPECIFICATIONS:

Foot pushbuttons should conform to the specifications shown in table 8.[14]

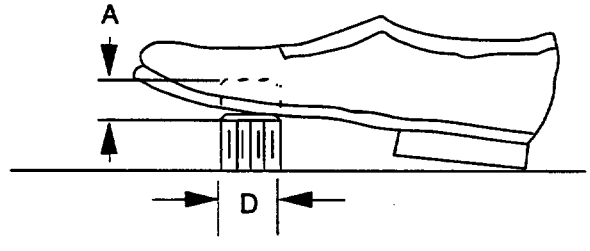

Figure 5. Reference figure for foot pushbutton specifications.

Table 8. Specifications for foot pushbuttons. (See figure 5 for reference letters.)

		Resistance		Displacement (A)		
	Diameter (D)	Foot Will Not Rest on the Pushbutton	Foot Will Rest on the Pushbutton	Operation with Normal Shoes	Operation with Heavy Boots	Separation[1]
Minimum	13 mm (.5 in)	18 N (4.1 lbf)	45 N (10.1 lbf)	13 mm (.5 in)	25 mm (1 in)	• Horizontal: 75 mm (3 in) • Vertical: 200 mm (7.9 in)
Maximum	–	90 N (20.3 lbf)	90 N (20.3 lbf)	65 mm (2.6 in)	65 mm (2.6 in)	–

[1] One switch per foot is preferred. Separations are for the case where there must be more than one pushbutton for the foot to operate.

Joysticks

Two types of joysticks are included in this handbook. Comparisons between them are shown first, followed by separate sections of guidelines for each. Only finger-operated and thumbtip-/fingertip-operated joysticks are considered (i.e., larger, hand-operated joysticks are excluded).

DEFINITIONS:

a. **Isometric joystick: An isometric joystick does not move in response to user commands. The controlled object moves in relation to the amount and direction of force applied to the stick. The isometric joystick is also known as a stiff stick, force stick, or pressure joystick.**

b. **Isotonic joystick: An isotonic joystick moves in response to user commands. The controlled object moves in relation to the amount and direction of displacement of the stick. The isotonic joystick is also known as a displacement stick.**

18. WHEN TO USE:

a. **Isometric joysticks should be used for applications that require return to center after each entry, in which user feedback is primarily visual from some system response, and where there is minimal delay and tight coupling between control input and system reaction. They should not be used where it is necessary for the user to maintain a constant force on the stick to generate a constant output over a sustained period of time.**

b. **Isotonic joysticks should be used for control of various display functions, such as data pickoff from a cathode ray tube. When used for rate control, the joystick should be spring loaded for return to center when the hand is removed.**[14]

19. USE OF GENERAL CONTROLS GUIDELINES:

The design and use of joysticks should conform to the applicable general guidelines for controls that are in chapter 3.

Joysticks: Isometric

20. INDICATORS FOR HOW TO BRING THE CONTROLLED OBJECT BACK ONTO THE DISPLAY WHEN USED IN RATE-CONTROL APPLICATIONS:

In rate-control applications (where speed of movement of the controlled object, such as a cursor, is proportional to the force applied to the joystick), which may allow the controlled object to travel beyond the

edge of the display, indicators should be provided to advise the user on how to bring the controlled object back onto the display.(14)

21. USE OF WRIST OR FOREARM SUPPORT:
An isometric joystick should be mounted to provide wrist or forearm support.(13)

22. RELATIONSHIP BETWEEN APPLIED FORCE AND X/Y OUTPUT:
For an isometric joystick, the x and y output should roughly approximate the magnitude of the applied force as perceived by the user.(14)

23. SPECIFICATIONS:
Isometric joysticks should conform to the specifications shown in table 9.(14)

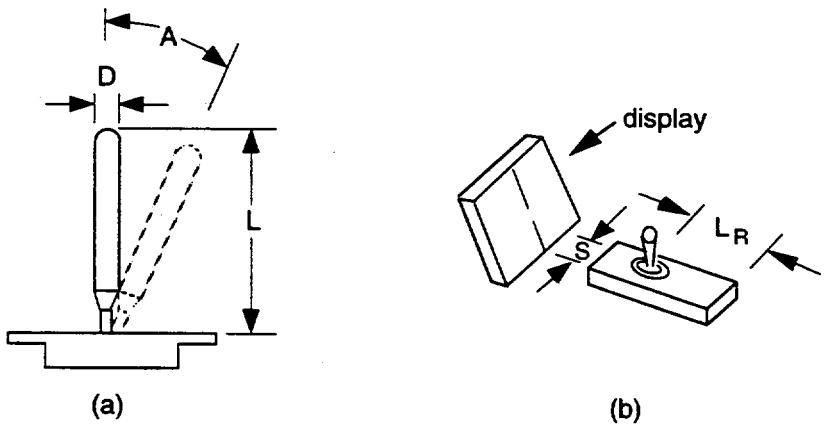

Figure 6. Reference figure for joystick specifications.

Table 9. Specifications for isometric joysticks. (See figure 6 for reference letters.)

	Force for Full Output	Length (L)	Diameter (D)	Hand- or Arm-Rest Length (L_R)	Separation Between Display Centerline and Stick Centerline (S)
Minimum	–	–	–	120 mm (4.7 in)	–
Maximum	45 N (10.1 lbf)	120 mm (4.7 in)	15 mm (.6 in)	–	400 mm (15.7 in)

Joysticks: Isotonic

24. INDICATORS FOR HOW TO BRING THE CONTROLLED OBJECT BACK ONTO THE DISPLAY WHEN USED IN RATE-CONTROL APPLICATIONS:

In rate-control applications (where speed of movement of the controlled object, such as a cursor, is proportional to the displacement of the joystick), which may allow the controlled object to travel beyond the edge of the display, indicators should be provided to advise the user on how to bring the controlled object back onto the display.(14)

25. SPRING LOADING FOR RATE-CONTROL APPLICATIONS:

An isotonic joystick used for rate control (where speed of movement of the controlled object, such as a cursor, is proportional to the displacement of the joystick) should be spring loaded for return to center when the hand is removed.(14)

26. USE OF WRIST OR FOREARM SUPPORT:

An isotonic joystick should be mounted to provide wrist or forearm support.(13)

27. SPECIFICATIONS:

Isotonic joysticks should conform to the specifications shown in table 10.(14)

Table 10. Specifications for isotonic joysticks. (See figure 6 for reference letters.)

	Length (L)	Diameter (D)	Resistance	Displacement (A)	Separation Between Display Centerline and Stick Centerline (S)	Hand- or Arm-Rest Length (L_R)	Clearance Around Stick
Minimum	75 mm (3 in)	6.5 mm (.25 in)	3.3 N (.7 lbf)	–	–	120 mm (4.7 in)	Maximum stick excursion plus 100 mm (3.9 in)
Maximum	150 mm (5.9 in)	16 mm (.6 in)	8.9 N (2 lbf)	45°	400 mm (15.7 in)	250 mm (9.8 in)	–

Key Operated Switches

28. WHEN TO USE:
    Key operated switches should be used to prevent unauthorized machine operation. They may also be used to provide ON-OFF functions.[14,27]

29. USE OF GENERAL CONTROLS GUIDELINES:
    The design and use of key operated switches should conform to the applicable general guidelines for controls that are in chapter 3.

30. COLOR, SHAPE, AND SIZE CODING:
    Color, shape, and size coding of key operated switches should be considered under the following conditions:
    a. Color may be used to aid in identifying keys by function or use location, where illumination is adequate to differentiate the colors. Red should be reserved for emergency functions.
    b. Shape coding may be used to aid in tactile identification of a given key. When shape coding is used, sharp corners should be avoided.
    c. Size coding may be used as long as no more than two sizes are employed. The dimensions should reflect the approximate differences between minima and maxima shown in table 11.[14]

31. LOCATION OF KEY TEETH:
    Reversible key designs should be used, i.e., it is preferable to have keys that will operate the lock with either side up. If a key design is used that has teeth on only one side, the lock should be oriented so that the teeth will be on the top to enter a vertical slot and to the left to enter a horizontal slot.[14]

32. LOCATION OF OFF:
    Locks should be oriented so that the key's vertical position is the OFF position.[13]

33. DIRECTION OF MOVEMENT:
    Actuation of an item by a key operated switch should be accomplished by turning the key clockwise from the vertical OFF position.[13]

34. REMOVING THE KEY FROM THE LOCK:
    A user should not be able to remove the key from the lock unless the switch is turned OFF.[13]

35. SPECIFICATIONS:

Key operated switches should conform to the specifications shown in table 11.[14]

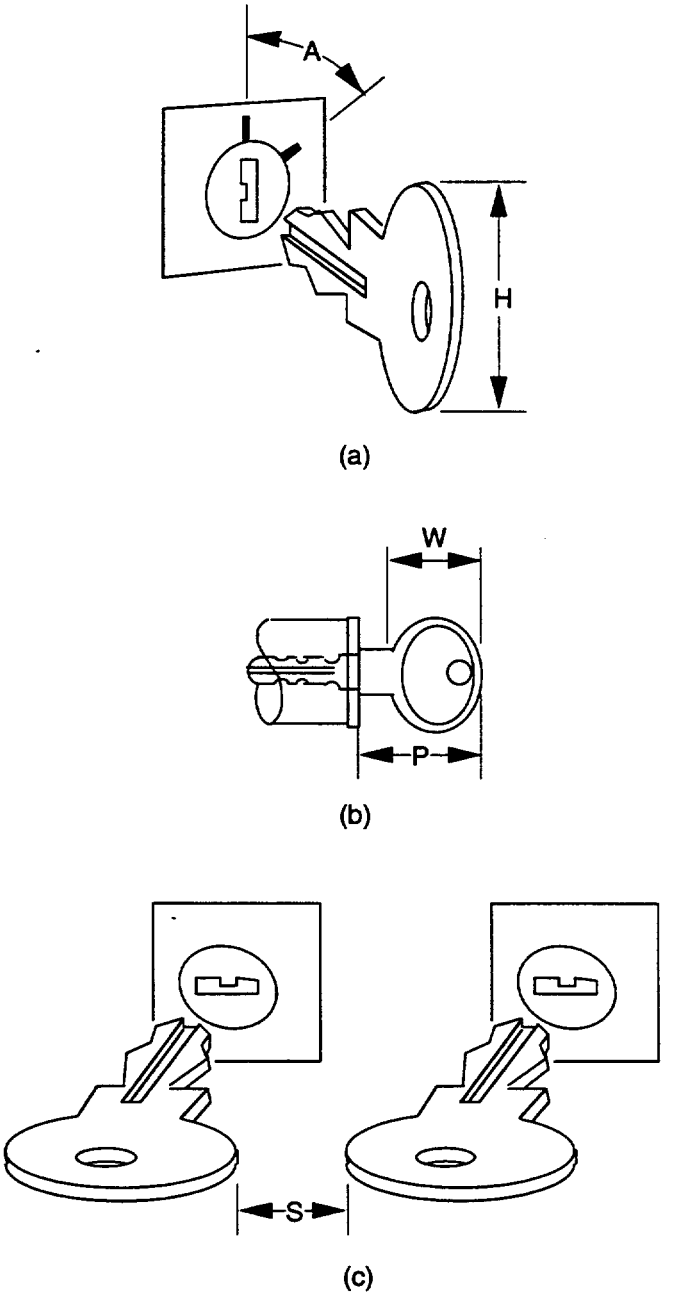

Figure 7. Reference figure for key operated switch specifications.

Table 11. Specifications for key operated switches. (See figure 7 for reference letters.)

	Height (H)	Width (W)	Amount Exposed When Key is Fully Inserted Into Lock (P)	Displacement (A)	Separation (S)	Resistance[1]
Minimum	13 mm (.5 in)	13 mm (.5 in)	20 mm (.8 in)	• With more than two positions: 30° (and total displacement ≤120°). • For only two positions: 90°.	25 mm (1 in)	.1 N•m (14 ozf•in)
Maximum	75 mm (3 in)	38 mm (1.5 in)	–	90°	–	.7 N•m (99.2 ozf•in)

[1] When the lock is new.

Knobs (Continuous)

36. WHEN TO USE:
Knobs should be used when low forces or precise adjustments of a continuous variable are required.(14)

37. USE OF GENERAL CONTROLS GUIDELINES:
The design and use of knobs should conform to the applicable general guidelines for controls that are in chapter 3.

38. WHEN ADJUSTMENT REQUIRES REFERENCE TO A SCALE:
If the adjustment of a knob requires reference to a scale, the scale should be placed on a panel and an index line should be inscribed on the knob.(14)

39. WHEN MOVEMENT INVOLVES MORE THAN 360° OF ROTATION:
If the range of knob movement involves more than 360° of rotation, scales should not be used.(14)

40. USE OF FIXED POINTER, MOVING SCALE ARRANGEMENT:

Do not use a knob with a fixed pointer and a moving scale.[10] (See figure 8.)

Comment: A fixed pointer, moving scale arrangement violates the well established principle that clockwise rotation of a control should lead to an increase in scale value (see table 5).

Good (moving pointer, fixed scale) | Poor (fixed pointer, moving scale)

Figure 8. Good and poor pointer-scale arrangements.

41. EDGE TYPE:

The edge of a knob should be serrated or knurled.[10,14]

42. SHAPE CODING:

Where knobs will have to be distinguished by touch alone, use the shapes shown in figure 9. Such shapes should have the following minimum dimensions:

a. Height: ≥13 mm (.5 in).

b. Width: ≥13 mm (.5 in).

c. Depth: ≥6.5 mm (.25 in).[14]

Comment: Reference 10 states that if the shapes shown in figure 9 are to be used with people wearing gloves, the shapes will have to be tested with gloves [to determine their discriminability].

43. WHEN LOCATED WHERE THEY CAN BE CONTACTED IN A CRASH:

When knobs are used in vehicles and are located where they could be contacted during the sudden deceleration of a crash, frontal surface area should be large, and all edges should be rounded in order to minimize the potential injuries associated with small, sharp knob designs.[14]

44. SPECIFICATIONS:

Knobs should conform to the specifications shown in table 12.[10,14]

Comment: Use larger diameter knobs for gloved operation.

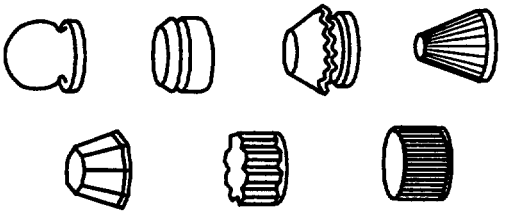

(a) Knobs for more than one full turn

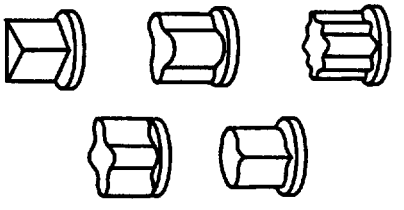

(b) Knobs for less than one full turn

Figure 9. Recommended shapes for coding knobs.

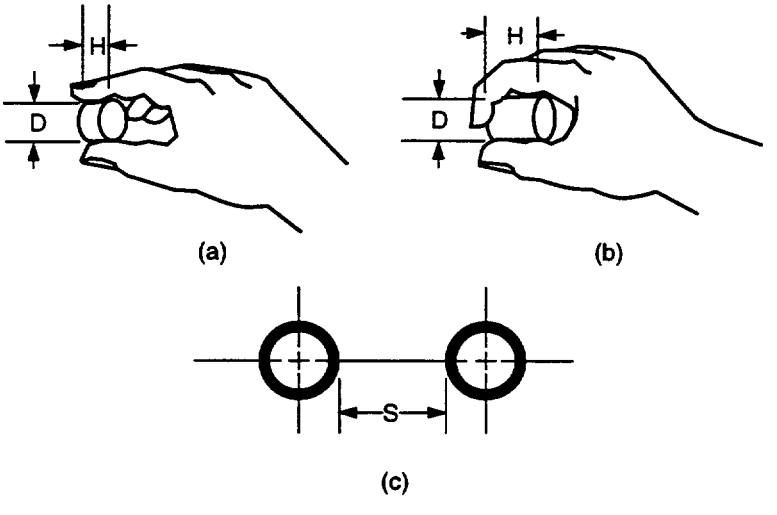

Figure 10. Reference figures for knob specifications.

Table 12. Specifications for knobs. (See figure 10 for reference letters.)

	Fingertip Grasp		Thumb and Finger Encircles		Separation		Torque	
	Height (H)	Diameter (D)	Height (H)	Diameter (D)	One Hand Individu-ally	Two Hands Simulta-neously	For Diameters ≤ 25 mm (1 in)	For Diameters > 25 mm (1 in)
Minimum	13 mm (.5 in)	10 mm (.4 in)	13 mm (.5 in)	25 mm (1 in)	25 mm (1 in)	75 mm (2.9 in)	–	–
Optimum	≥ 19 mm (.75 in)[1]	25 to 50 mm (1 to 2 in)[1]	–	–	50 mm (2 in)	125 mm (4.9 in)	–	28.2 to 70.6 mN·m (4 to 10 ozf·in)[1]
Maximum	25 mm (1 in)	100 mm (3.9 in)	25 mm (1 in)	75 mm (2.9 in)	–	–	32 mN·m (4.5 ozf·in)	42 mN·m (6 ozf·in)

[1] Reference 10 states that these values will accommodate a user who is wearing gloves.

Legend Switches

45. **WHEN TO USE:**
Legend switches should be used to display qualitative information on an important system status, to reduce the demands for the user to interpret information, and when functional grouping or a matrix of controls and displays is required but space is very limited.(14)

46. **USE OF GENERAL CONTROLS GUIDELINES:**
The design and use of legend switches should conform to the applicable general guidelines for controls that are in chapter 3.

47. **USE OF BARRIERS:**
Barriers, when used, should not obscure visual access to controls, labels, or displays, and should have rounded edges. (Dimensions for barriers are given in table 13.)(13)

48. **INDICATION OF SWITCH ACTUATION:**
For positive indication of switch actuation, a legend switch should be provided with a detent or click.(13)

Comment: Reference 25 notes the possibility of environmental noise masking an audible click. This is certainly relevant for the AHS environment, where there are several possible sources of noise (e.g., radio, blower fan, conversation).

49. LEGEND LEGIBILITY:

The legend on a legend switch should be legible with or without internal illumination.[14]

50. WHEN A LAMP TEST IS REQUIRED:

If a legend switch does not have duplicate bulbs, dual filament, or equivalent reliability, the legend switch circuit should permit a positive test of the lamp.[14]

51. LAMP REPLACEMENT:

Lamps within a legend switch should be replaceable from the front of the panel by hand, and the legends or covers should be keyed to prevent the possibility of interchanging the legend covers.[13]

52. NUMBER OF LINES OF LETTERING:

There should be a maximum of three lines of lettering on the legend plate of a legend switch.[13]

53. LOCATION WITHIN THE VISUAL FIELD:

A legend switch should be located within a cone between the horizontal line of sight and 30° below the horizontal.[14]

54. SPECIFICATIONS:

Legend switches should conform to the specifications shown in table 13.[13]

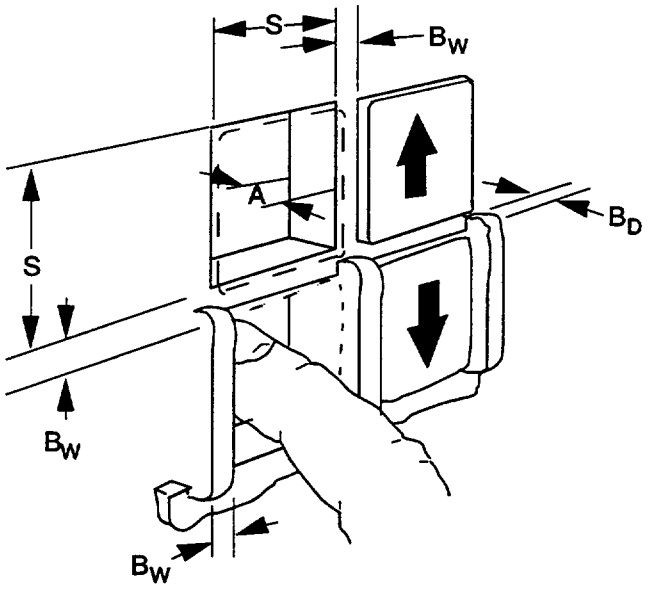

Figure 11. Reference figure for legend switch specifications.

Table 13. Specifications for legend switches. (See figure 11 for reference letters.)

	Size (S)			Barrier Dimensions[1]		
	When the Switch is Not Depressed Below the Panel	When the Switch Is Depressed Below the Panel	Displacement (A)	Width (B_W)[2]	Depth (B_D)	Resistance
Minimum	15 mm (.6 in)	19 mm (.75 in)	3 mm (.1 in)	3 mm (.1 in)	6 mm (.2 in)	2.8 N (.6 lbf)
Maximum	38 mm (1.5 in)	38 mm (1.5 in)	6 mm (.2 in)	6 mm (.2 in)	6 mm (.2 in)	16.7 N (3.8 lbf)

1 Barriers should have rounded edges.
2 Separation between switches is the same as barrier width.

Pushbuttons

55. WHEN TO USE:

Pushbuttons should be used primarily for simple switching between two conditions, selection of alternate ON-OFF functions from an array of related conditions or subsystem functions, release of a locking system (such as on a parking brake), or entry of a discrete control order. Pushbuttons should not be used indiscriminately merely to make all panel controls look alike or where another type of switch could be used to save panel space (e.g., toggle switch). Pushbuttons may be used for any of the following kinds of operations singly or in combination:

a. **Momentary contact. This should be used for single push-HOLD/release-OFF functions.**

b. **Alternate action. Alternate action for a single function may be implemented either as a single button or in a two-button format. With the single-button type, a first press sets the switch to the ON state and a second press sets it to OFF. With the two-button type, the buttons are mechanically interlocked so that one button is depressed when the other button is in the up position.**

c. **Reconfigurable. The button top has a legend on it that indicates the current state of the function being controlled. Liquid crystals, light-emitting diodes, or hard labels alternately illuminated may be used to provide the legend.**

d. **Stepping action.(14) This type is not included in the handbook.**

56. USE OF GENERAL CONTROLS GUIDELINES:

The design and use of pushbuttons should conform to the applicable general guidelines for controls that are in chapter 3.

57. INDICATION OF SWITCH ACTUATION/DEACTUATION:

Positive feedback should be provided to indicate that the pushbutton switch has been actuated or deactuated. The following methods should be considered:

a. **Switch displacement should be visible.**
b. **Provide tactile and auditory indications, i.e., a gradual resistance buildup to a sudden resistance release as the button snaps into place, accompanied by an audible click.**
c. **Provide an accompanying visual indication (e.g., an illuminated switchcap).**[14]

Comment: Reference 25 notes the possibility of environmental noise masking an audible click. This is certainly relevant for the AHS environment, where there are several possible sources of noise (e.g., radio, blower fan, conversation).

58. USE IN THE DARK:

Illuminating a pushbutton is useful when it needs to be located in the dark.[10]

59. WHEN INTERNAL ILLUMINATION IS USED:

When a pushbutton is internally illuminated, a lamp test capability and/or dual lamp reliability should be provided, except for switches using light-emitting diodes in place of incandescent lamps. Incandescent lamps should be replaceable from the front of the panel, by hand, and the legend or cover should be keyed to prevent the possibility of interchanging legend covers.[14]

60. HEIGHT ABOVE THE PANEL WHEN DEPRESSED:

A pushbutton should extend at least 2.5 mm (0.1 in) above the panel when it is in the depressed position to allow the user to press the switch far enough to make contact.[14]

61. SWITCHCAP SHAPE:

Switchcap surfaces should, in general, be flat, but with rounded edges. However, for proper finger centering, which should be ensured, the surface may be concave. General switchcap shapes may be round, square, or rectangular as long as they provide an adequate contact area (see table 14) and are compatible with identification or legend criteria.[14]

62. LABELING:

Although pushbuttons may be identifiable by means of panel labels and/or symbols, labels placed on the switchcap (where size and other use factors are compatible) are preferred. Criteria for labels, symbols,

and legends should be followed. Legends normally should be legible with or without internal illumination. No more than three lines of lettering should normally be used on a legend plate.[14]

63. DIAMETER WHEN MOUNTED AT THE END OF A HANDLE:
Pushbuttons located at the end of a handle should have the following minimum diameters (see figure 12):
   a. Finger operated: 10 mm (0.4 in).
   b. Thumb operated: 13 mm (0.5 in).[10]

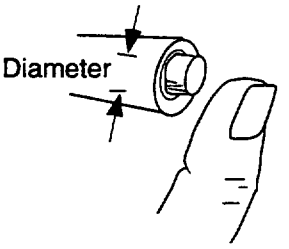

Figure 12. A handle-mounted pushbutton.

64. VISIBILITY WHEN MOUNTED AT THE END OF A HANDLE:
A pushbutton located at the end of a handle should be visible from the user's normal eye reference position.[10]

65. NONINTERFERENCE WITH THE HOST CONTROL WHEN MOUNTED ON THE END OF A HANDLE:
When a handle-mounted pushbutton is used, care should be taken to ensure that its location and action do not disturb the control on which it is mounted.[14]

66. FEEDBACK WITH A SINGLE-BUTTON ALTERNATE-ACTION PUSH-BUTTON:
With a single-button alternate-action pushbutton, feedback to indicate the ON state should be provided either by a switchcap lamp or legend, or by a closely associated lamp or legend.[14]

67. FEEDBACK WITH A TWO-BUTTON ALTERNATE-ACTION PUSHBUTTON:
With a two-button alternate-action pushbutton, although the depressed button provides feedback on switch state, additional feedback by means of a switchcap lamp or closely associated lamp or legend should normally be provided.[14]

68. PREVENTION OF ACCIDENTAL ACTUATION:

When it is important to preclude accidental actuation, a pushbutton can be recessed so that it is below the plane of the adjacent panel surface. The "well" for such configurations needs to be at least 2.5 cm (1 in) in diameter for bare-hand operation and at least 5.1 cm (2 in) for gloved-hand operation. Tapering the sides of the well will help the user find the button without having to be so accurate.[10] See figure 13.

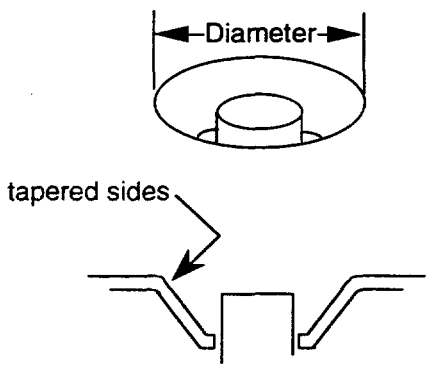

Figure 13. A recessed pushbutton.

69. COLOR OF A PALM PUSHBUTTON WHEN USED AS AN EMERGENCY CONTROL:

When used as an emergency control, a palm pushbutton should be colored red.[14]

70. SPECIFICATIONS:

Thumb and finger pushbuttons should conform to the specifications shown in table 14. Palm pushbuttons should conform to the specifications shown in table 15.[13,14,28]

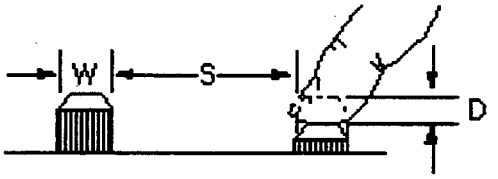

Figure 14. Reference figure for pushbutton specifications.

Table 14. Specifications for thumb and finger pushbuttons.[1] (See figure 14 for reference letters.)

	Width of Square or Diameter (W)				Resistance		Displacement (D)		Separation (S)[2]			
	Fingertip Operation		Thumb Operation						Single Finger, Single Operation		Single Finger, Sequential Operation	
	Without Gloves	With Gloves	Without Gloves	With Gloves	Buttons Used in Keypads and Keysets	Other Single Finger Actuated Buttons	Without Gloves	With Gloves	Without Gloves	With Gloves	Without Gloves	With Gloves
Minimum	10 mm (.4 in)	13 mm (.5 in)	19 mm (.75 in)	–	.25 N (.06 lbf)	.25 N (.06 lbf)	3.2 mm (.1 in)	16.2 mm (.6 in)	13 mm (.5 in)	25 mm (1 in)	6 mm (.2 in)	–
Preferred	–	–	–	–	–	–	–	–	50 mm (2 in)	–	13 mm (.5 in)	–
Maximum	19 mm (.75 in)	–	–	–	1.5 N (.3 lbf)	11.1 N (2.5 lbf)	6.5 mm (.25 in)	19.5 mm (.77 in)	–	–	–	–

1 Data do not apply to buttons in keyboards.
2 Mechanical interlocks or barriers may be used instead of these separations.(13)

Table 15. Specifications for palm pushbuttons. (See figure 14 for reference letters.)

	Width of Square or Diameter (W)			Displacement (D)		
	Non-emergency Operation	Emergency Operation	Resistance	Without Gloves	With Gloves	Separation (S)
Minimum	19 mm (.75 in)	25 mm (1 in)	2.8 N (.6 lbf)	3.2 mm (.1 in)	16.2 mm (.6 in)	75 mm (3 in)
Maximum	–	–	23 N (5.2 lbf)	6.5 mm (.25 in)	19.5 mm (.8 in)	–

Rocker Switches

71. WHEN TO USE:
Rocker switches should be used for functions that require two discrete positions, as an alternate to toggle switches. They should be considered where the toggle switch handle might snag the user's clothing, etc., or where there is insufficient panel space for separate labeling of switch positions. Rocker switches with three positions should be used only where the use of a more suitable three-position switch (rotary selector or toggle switch) is not feasible, or where the rocker switch is spring loaded with the center OFF.[14]

72. USE OF GENERAL CONTROLS GUIDELINES:
The design and use of rocker switches should conform to the applicable general guidelines for controls that are in chapter 3.

73. ORIENTATION WHEN USED FOR ON-OFF FUNCTIONS:
Rocker switches used for ON-OFF functions should be oriented so that the handle moves in a vertical plane, except where a lateral motion is to be related to a left-right display relationship.[14]

74. SWITCH FEEL:
Resistance should gradually increase, then drop when the switch snaps into position. The switch should not be capable of being stopped between positions.[14]

75. DIFFERENTIATING SWITCH POSITIONS:
Alternate colors may be used to denote ON and OFF positions, and alternate illumination of either position may also be used to provide positive feedback as to which position the switch is in. Where ambient illumination will provide luminance of less than 3.5 cd/m^2 (1 fl), the switch should be internally illuminated.[13,14]

Comment: See guideline 76 also, regarding character dimensions for internally illuminated rocker switches.

76. CHARACTER DIMENSIONS FOR INTERNALLY ILLUMINATED SWITCHES:

Where ambient illumination dictates the use of internal illumination of switch positions (i.e., when it is less than 3.5 cd/m^2 [1 fl]), digits and letters on the switch should be illuminated characters on an opaque background, with the following approximate dimensions:

a. **Height: 4.8 mm (0.19 in).**

b. **Height-to-width ratio: 3:2.**

c. **Height-to-stroke-width ratio: 10:1.**[13]

77. USE OF A GUARD TO PREVENT ACCIDENTAL ACTUATION:

A guard may be used to prevent accidental actuation of a rocker switch. When one is used, the separation between the inside edges of the guards should be:

a. **For use without gloves: switch width plus 17 mm (0.7 in).** (Based on reference 26.)

b. **For use with gloves: switch width plus 30 mm (1.2 in).** (Based on reference 14.)

See table 16 for switch width recommendations. (Based on references 14,26.)

78. SPECIFICATIONS:

Rocker switches should conform to the specifications shown in table 16.[14]

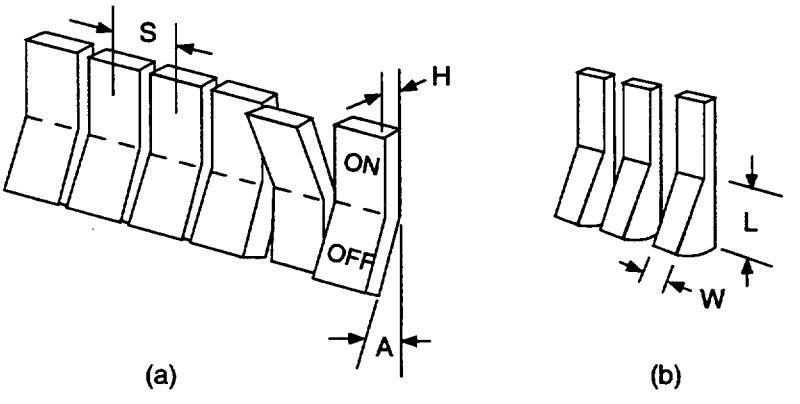

The minimum width is especially desirable for use with gloves

Figure 15. Reference figures for rocker switch specifications.

Table 16. Specifications for rocker switches. (See figure 15 for reference letters.)

	Width (W)[1]					Separation (S)		
	Without Gloves	With Gloves	Length (L)	Height (H)	Angle of the Face (A)	Without Gloves	With Gloves	Resistance
Minimum	6.5 mm (.25 in)	6.5 mm (.25 in)	13 mm (.5 in)	3 mm (.12 in)	30°	19 mm (.75 in)	32 mm (1.26 in)	2.8 N (.63 lbf)
Maximum	–	–	–	–	–	–	–	11 N (2.48 lbf)

[1] The width shown is especially good for gloved use.

Rotary Selectors

79. WHEN TO USE:
Rotary selectors should be used for discrete functions when three or more detented positions are required. They should not be used for a two-position function unless prompt visual identification is of primary importance and speed of control operation is not critical.(14)

80. USE OF GENERAL CONTROLS GUIDELINES:
The design and use of rotary selectors should conform to the applicable general guidelines for controls that are in chapter 3.

81. PREFERRED SHAPE:
The preferred shape for a rotary selector is shown in figure 16.(10,28)

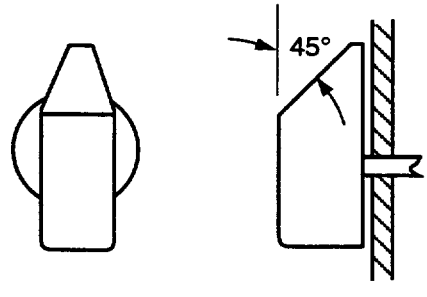

Figure 16. Preferred shape for a rotary selector.

82. NUMBER OF SELECTABLE POSITIONS:
Rotary selectors should have no more than 12 selectable positions if the knob is not visible to the user at all times, and no more than

24 positions for constantly visible switches. Detents should use the angular separations shown in table 17.[24]

Comment: Although 24 positions are allowed for constantly visible switches, information is shown in table 17 for only 12 positions because it is believed that that number will be more than adequate for any AHS application.

Table 17. Recommended starting positions and angular displacements for rotary selectors.[1]

Total Number of Settings	Recommended Starting Position, degrees			Recommended Angular Displacement, degrees
	Left Hand Operation	Right Hand Operation	Either Hand	
3	16.00	264.00	320.00	40.00
4	354.17	254.65	304.00	37.06
5	335.34	246.58	290.96	34.52
6	318.91	239.54	279.22	32.31
7	304.49	233.35	268.92	30.36
8	291.66	227.86	259.76	28.64
9	280.24	222.96	251.60	27.10
10	269.96	218.56	244.26	25.72
11	260.71	214.59	237.65	24.47
12	252.36	211.01	231.68	23.33

[1] Assumes visual positioning of the control.

83. GENERAL CRITERIA:

Rotary selectors should meet the following criteria:

a. **It should be clear to the user which end of the control is the pointer.**

b. **Stops should be provided at the beginning and end of the range of control positions if the switch is not required to be operated beyond the end positions or specified limits.**

c. **Switch resistance should be elastic, building up between positions and then decreasing as each position is approached, so the control snaps into position without stopping between adjacent positions.**[14,29]

Comment: Reference 14 suggests that shape must be used to indicate to the user which end of the control is the pointer. It would seem that where visual access to the control will be assured, however, a marker on the control could also serve that purpose (see figure 17 for an example).

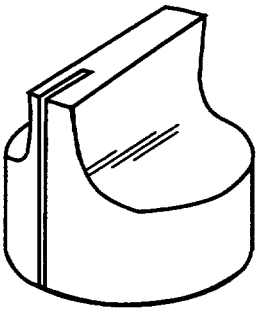

Figure 17. The pointer end is indicated by the marker on the control.

84. USE OF A GUARD TO PREVENT ACCIDENTAL ACTUATION:

A guard may be used to prevent accidental actuation of a rotary selector. When one is used, it should conform to the spacing specifications shown in figure 18.

85. SPECIFICATIONS:

Rotary selectors should conform to the specifications shown in table 18.[14]

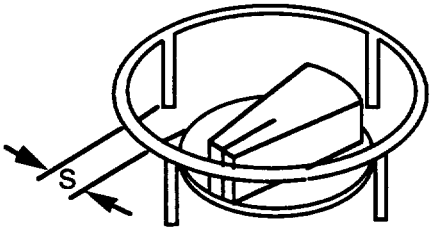

	Spacing (S)	
	Without Gloves [26]	With Gloves (Based on reference 14.)
Minimum	10 mm (.4 in)	23 mm (.9 in)
Maximum	40 mm (1.6 in)	53 mm (2.1 in)

Figure 18. Spacings for a rotary selector guard.

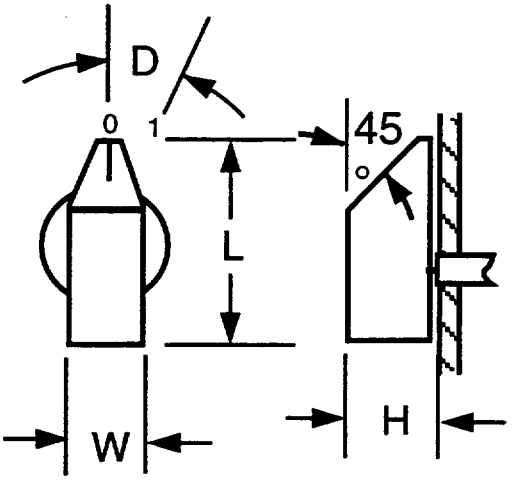

Figure 19. Reference figure for rotary selector specifications.

Table 18. Specifications for rotary selectors. (See figure 19 for reference letters.)

	Length (L)				Displacement (D)			
	Without Gloves	With Gloves	Width (W)	Height (H)	Visual Positioning	Blind Positioning	Resistance	Separation (One Hand Random Operation)
Minimum	38 mm (1.5 in)	51 mm (2 in)	13 mm (.5 in)	16 mm (.6 in)	15°	30°	.11 N·m (15.6 ozf·in)	25 mm (1 in)
Maximum	100 mm (3.9 in)	113 mm (4.4 in)	25 mm (1 in)	75 mm (2.9 in)	40°[1]	40°[1]	.68 N·m (96.3 ozf·in)	–

[1] Displacement can be up to 90° when special requirements demand large separations.

Slide Switches

86. WHEN TO USE:

Slide switches should be used for functions that require two discrete positions. Slide switches may also be used for functions that require a higher number of discrete positions in which the switches are arranged in a matrix to permit easy recognition of relative switch settings, but should not be used where mispositioning is to be avoided.[14]

87. USE OF GENERAL CONTROLS GUIDELINES:
The design and use of slide switches should conform to the applicable general guidelines for controls that are in chapter 3.

88. SWITCH FEEL:
Detents should be provided for each control setting. Resistance should gradually increase, then drop when the switch snaps into position. The switch should not be capable of stopping between positions.[14]

89. ORIENTATION:
When practicable, slide switches should be vertically oriented with movement of the slide up or away from the user turning the equipment or component on, causing a quantity to increase, or causing the equipment or component to move forward, clockwise, to the right, or up. Horizontal orientation or actuation of slide switches should be employed only for compatibility with the controlled function or equipment location.[14]

90. INDICATION OF SETTING WHEN THERE ARE MORE THAN TWO POSITIONS:
Slide switch controls involving more than two positions should be designed to provide a positive indication of control setting, preferably a pointer located on the left side of the slide handle.[14]

91. USE OF A GUARD TO PREVENT ACCIDENTAL ACTUATION:
A guard may be used to prevent accidental actuation of a slide switch. When one is used, the separation between the inside edges of the guards should be:

a. **For use without gloves: switch width plus 17 mm (0.7 in).** (Based on reference 26.)
b. **For use with gloves: switch width plus 30 mm (1.2 in).** (Based on reference 14.)

See table 19 for switch width recommendations. (Based on references 14,26.)

92. SPECIFICATIONS:
Slide switches should conform to the specifications shown in table 19.[14,30]

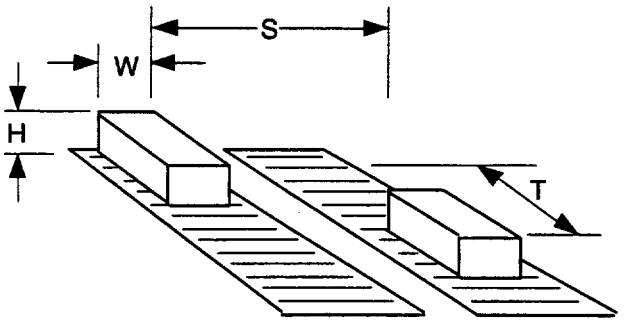

Figure 20. Reference figure for slide switch specifications.

Table 19. Specifications for slide switches. (See figure 20 for reference letters.)

			Height (H)		Separation (S)			
	Travel (T)	Width (W)	Without Gloves	With Gloves	Single Finger Operation	Single Finger Sequential Operation	Simulta-neous Operation by Different Fingers	Resistance
Minimum	3 mm (.1 in)	6 mm (.2 in)	6.3 mm (.2 in)	13 mm (.5 in)	19 mm (.75 in)	13 mm (.5 in)	16 mm (.6 in)	3 N (.7 lbf)
Optimum	6 to 13 mm (.2 to .5 in)	–	–	–	50 mm (2 in)	25 mm (1 in)	19 mm (.75 in)	–
Maximum	–	25 mm (1 in)	–	–	–	–	–	11 N (2.5 lbf)

Toggle Switches

93. WHEN TO USE:

Toggle switches should be used for functions that require two discrete positions or where space limitations are severe. They may also be used for three discrete positions, but a rotary selector or pushbutton array is usually preferred for this application.[14]

94. USE OF GENERAL CONTROLS GUIDELINES:

The design and use of toggle switches should conform to the applicable general guidelines for controls that are in chapter 3.

95. ORIENTATION:

Toggle switches should be oriented vertically, with OFF in the down

position. Horizontal orientation and actuation should be used only for compatibility with the controlled function or equipment location.[13]

96. SWITCH FEEL:
Resistance should gradually increase, then drop when the switch snaps into position. The switch should not be capable of being stopped between positions.[13]

97. USE OF A GUARD TO PREVENT ACCIDENTAL ACTUATION:
A guard may be used to prevent accidental actuation of a toggle switch. When one is used, it should conform to the spacing specifications shown in figure 21. Where a guard is not appropriate, a lift-to-unlock toggle switch may be used. When a lift-to-unlock switch is used, the resistance to pull the switch into its unlocked position should not exceed 13 N (2.9 lbf).[13]

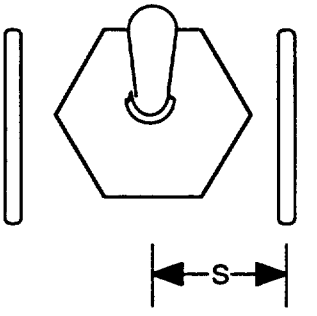

Spacing (S):
Without gloves: ≥25 mm (1.0 in)
With gloves: ≥32 mm (1.3 in)[14]

Figure 21. Spacings for a toggle switch guard.

98. SPECIFICATIONS:
Toggle switches should conform to the specifications shown in table 20.[13,14]

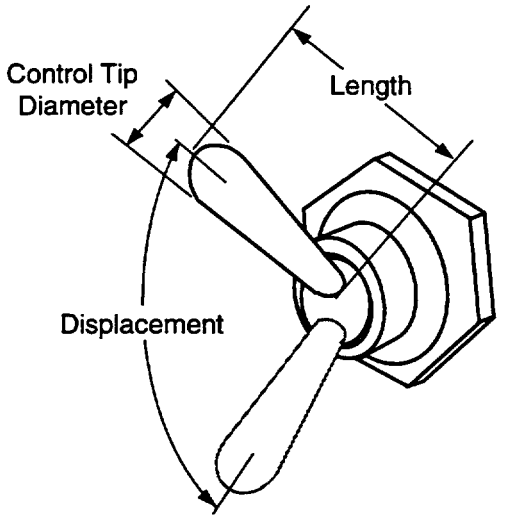

Figure 22. Reference figure for toggle switch specifications.

Table 20. Specifications for toggle switches. (See figure 22.)

	Handle Length		Control Tip Diameter	Displacement		Resistance
	Without Gloves	With Gloves		Two Position	Three Position	
Minimum	13 mm (.5 in)	38 mm (1.5 in)	4.5 mm (.2 in)	30°	18°	2.8 N (.6 lbf)
Preferred	–	–	–	–	25°	–
Maximum	50 mm (2 in)	50 mm (2 in)	25 mm (1 in)	80°	40°	11 N (2.5 lbf)

Touch Screens

99. WHEN TO USE:

Touch screens should be used when there is little opportunity for training; when targets are large, discrete, and spread out; when frequency of use is low; and when the task requires little or no text input.[31]

100. USE OF GENERAL CONTROLS GUIDELINES:

The design and use of touch screens should conform to the applicable general guidelines for controls that are in chapter 3.

101. INDICATION OF TOUCH SENSITIVE AREAS:

The touch sensitive areas of a display should be indicated.[26]

102. SIZE OF TOUCH SENSITIVE AREAS:

Touch sensitive areas should be at least 1.9 cm (0.75 in) square and at least 0.32 cm (0.125 in) apart.[31]

103. LUMINANCE TRANSMISSION:

A touch screen should have sufficient luminance transmission to allow the display with the touch screen installed to be clearly readable in the intended environment and meet the appropriate display luminance requirements (see guideline 123).[13]

104. INDICATION OF ACTUATION:

A positive indication of touch screen actuation (visual and/or auditory) should be provided to acknowledge the system's response to the control action.[13,31]

105. ACTUATION FORCE:

The force required to operate a force-actuated touch screen should be not less than 0.25 N (0.06 lbf) and not greater than 1.5 N (0.3 lbf).[13]

106. CRITERION TOUCH DURATION:

The system should accept only one touch command at a time and should recognize a touch of approximately 100 ms.[32]

Voice Recognition

107. WHEN TO USE:

Voice recognition should be used in situations where the user's hands and/or eyes are busy or mobility is required. It is likely to improve system throughput only in complex tasks that involve high cognitive, visual, and manual loading.[31,33]

108. USE OF GENERAL CONTROLS GUIDELINES:

The design and use of voice recognition should conform to the applicable general guidelines for controls that are in chapter 3.

109. RESTRICTIONS ON USE:

Given current technology, consider the use of voice recognition only under the following circumstances:

a. The system can be trained to understand specific users.

b. The required vocabulary is small (15 to 30 words).

c. The environment is quiet.

d. The cost of a recognition error is low.

e. **Identification and correction of errors are easy. When feedback alerts the user to a recognition error, it is very important to ask for repetition (of the control word) quickly, clearly, and without offending the user.**

f. **Convenient means are provided to inhibit the system except when voice recognition is intended.**

g. **Voice recognition is required infrequently.**

h. **Performance will be satisfactory even under stress conditions.** (See references 14, 31, 34, 35, and 36.)

110. USE FOR SECURITY PURPOSES:

Voice recognition may be used in systems to positively identify a user or to restrict communication access to specific individuals. If individual speaker recognition is used for security purposes (e.g., to prevent unwanted persons from using the AHS in-vehicle system), it should be used in combination with some other control method to attain sufficient reliability.[14]

111. TRAINING CONDITIONS FOR SPEAKER-DEPENDENT SYSTEMS:

Speaker-dependent voice recognition system training should be performed in the context of the operational task—that is, under noise conditions comparable to the expected task environment. (Based on reference 36.)

112. EXPECTED SYSTEM ACCURACY:

The expected voice recognition system accuracy rate of correct procedures being executed on the first prompt is about 95 percent or greater.[37]

113. USER FEEDBACK:

The user should be assured of receiving appropriate recognition feedback. The major decisions center around the nature and timing of the feedback, and the following considerations should be regarded as minimal:

a. **Feedback may be provided concurrently (after each item in a string has been entered) or terminally (after the whole string has been entered). Generally, concurrent feedback will be useful if it is important to correct errors as the data are being entered. In addition, concurrent feedback can be used to regulate the timing of the input. The feedback shows the user that the utterance was correct and signals the recognition system's readiness to receive the next item.**

b. **Timing of the feedback is important in regulating the progress of the task. The more regular and predictable the timing, the better.**[36]

114. NONDISRUPTION OF TASK SEQUENCES:

No disruption of a task sequence, either by long response delays or by recognition errors, should be permitted.[36]

Comment: Response delays can negatively affect overall user acceptance when they are very short (<0.8 s) as well as when they are longer (>3 s).[36]

115. MINIMIZING RECOGNITION ERRORS:

To help minimize recognition errors:

a. **Provide a familiar and distinctive vocabulary. The user will be more consistent when pronouncing familiar words.**

b. **Use longer words and phrases because they will be more discriminable by the recognition system than shorter ones. Thus, letters and digits make poor input; multisyllable words and short phrases make better input.**

c. **Use words that are maximally distinct from one another. Avoid easily confused words like pick and quit (e.g., select and quit will be less likely to be confused).**[31]

116. WHEN NOT TO USE:

Voice recognition is not suited to describing the position or manipulation of objects. Humans have a relatively impoverished vocabulary for pointing at objects in space.[35]

117. COMBINED WITH OTHER TASKS:

Voice recognition can be combined with other tasks to advantage, but only if they are nonverbal. Less interference will be found if, when two tasks are undertaken simultaneously, one of the tasks is verbal and the other is spatial.[35]

Chapter 5. General Guidelines for Electronic Visual Displays

In this chapter are general guidelines intended to be used for all the electronic visual displays included in the handbook. Guidelines specific to each electronic display, and for nonelectronic displays, are in chapter 6. Table 21 shows to which displays the general guidelines in the present chapter apply.

Table 21. Display types to which general guidelines for electronic visual displays apply.

	Do the General Guidelines in Chapter 5 Apply?	
	Yes	No
Analog/Mechanical		3
Cathode Ray Tube	3	
Counter/Mechanical		3
Electroluminescent	3	
Head-Up Display	3	
Light-Emitting Diode, Matrix Addressed	3	
Liquid Crystal Display:		
• Transflective, Segmented Characters.	3	
• Transflective, Matrix Addressed.	3	
• Transmissive, Matrix Addressed.	3	
Plasma, Matrix Addressed.	3	
Speech		3
Simple Tone		3
Vacuum Fluorescent Display:		
• Segmented Characters.	3	
• Matrix Addressed.	3	
Simple Indicators:		
• Incandescent.		3
• Light-Emitting Diode.		3

118. WHEN TO USE:

Electronic visual displays should be used generally where presentation of dynamic information and flexible display formats are more important than power consumption and sunlight visibility.

119. LUMINANCE ADJUSTMENT:

The user should have the capability to adjust luminance level manually. (Based on reference 38.)

120. AIR FROM DISPLAY COMPONENTS:

The exhausting of air from display components should be accomplished so as to avoid discomfort to users of the display or to other users in the vicinity of the equipment.[39]

121. IMMEDIATE DISPLAY SURROUND:

The area immediately surrounding a display screen should be matte black to avoid specular reflections.[40]

Comment: Color may be less important than the matte finish, although black will reduce reflections better than other colors.

122. CONTRAST RATIO:

The minimum required monochrome contrast ratio (defined as luminance $_{higher}$/luminance $_{lower}$) is 1.5 for acceptable legibility and 2.5 for comfortable reading.[40]

Comment: There is no reason to specify a maximum, since visual performance improves with increases in luminance contrast ratio. If two or more people in the vehicle must use the display simultaneously, or if the display must be usable from multiple positions in the vehicle, the contrast requirement should be met for each viewing position.

123. MAXIMUM LUMINANCE:

Maximum display luminance should be at least 70 to 140 cd/m^2 (20.4 to 40.9 fl), measured after any optical effects such as neutral density filters or touch screens which tend to reduce display luminance. (Based on reference 40.)

Comment: A lower display luminance will likely be desirable for night viewing (see guideline 124).

124. LUMINANCE RANGE:

Display luminance should be adjustable over a range of at least 50:1 (highest to lowest), with a preferred range of 100:1. (Based on reference 40.)

Comment: The preferred range of 100:1 assumes that the preferred display luminance level at night will be approximately two orders of magnitude below that required for daylight driving, to avoid uncomfortable display glare and misadaptation of the eyes to the outside visual scene.

125. CONTRAST ENHANCEMENT FILTER:

When a contrast enhancement filter is used on an electronic display, a neutral density filter is preferred to a narrow band filter. (Based on reference 40.)

Comment: Although luminance contrast may be improved by using a narrow-band contrast enhancement filter, a neutral density filter may improve color contrast.

126. LUMINANCE HALF-LIFE:

The luminance half-life of a display (i.e., the total number of operating hours until the display luminance is reduced to 50 percent or less of its original maximum luminance) should be at least 5000 h. (Based on reference 40.)

Comment: Under some circumstances, display luminance may fail catastrophically. However, a gradual loss of display luminance over the life of the display is typical. Operating conditions such as extreme temperatures may cause display half-life to be reduced.[41]

127. VISIBILITY ENVELOPE:

An electronic display must be visible (i.e., retain its required luminance contrast as well as not be physically or optically obstructed) within an envelope defined as:

- **At least ±30° to 40° laterally from the design eye reference point.**
- **At least 30° above and 5° below the design eye reference point.** (Based on reference 40.)

Comment: If two or more people in the vehicle must use the display simultaneously, or if the display must be usable from multiple positions, the visibility envelope requirements should be met for each design eye reference point.[41]

128. SURFACE TEMPERATURES:

External surfaces that can be touched during operation should have a surface temperature that does not exceed 50 °C (122 °F). Surfaces that are intended to be touched during normal operation should not exceed 35 °C (95 °F).[39]

129. AVOIDING GLARE:

Displays should be positioned in the vehicle to avoid glare, including both glare from the outside environment and glare from other vehicle lights, displays, and reflective surfaces, to the extent possible. Glare at the display screen should be reduced by using a diffusing (etched)

surface, antireflection coating, or a mesh, or by shielding the display from glare sources. (Based on reference 39.)

Comment: Interior illumination sources include lights and other displays. In general, glare increases with the luminance, size, angle of incidence, and proximity of the source to the line of sight. It may require shielding or filtering to prevent glare from illumination coming from outside the vehicle. Care should be exercised in choosing a glare reduction technique, since some techniques may have the undesirable side effect of reducing the sharpness of the displayed image.

130. COLOR AS A STAND-ALONE CUE:

Make color coding redundant with some other display feature such as symbology; do not code by color alone.[42]

Comment: Redundancy permits people with color vision deficiencies to interpret color coded displays correctly. And, in situations such as high ambient lighting conditions, redundancy can help to ensure the accurate transmission of information where colors alone may be difficult to distinguish even for persons with normal color vision.

131. COLOR CODING QUANTITATIVE INFORMATION:

In general, color should not be used to code quantitative information unless that information can be divided into a small number of distinct categories, such as has been done for color coded weather radar map displays.[43]

Comment: Color has been shown to be effective as a coding scheme, particularly for qualitative information. Where more than a small number of coding categories exist, other coding schemes, such as alphanumerics, are more efficient for the transmission of the information. However, the use of color may still enhance information transmission if the separate categories can be logically divided into several major divisions.[43]

132. NUMBER OF COLORS TO USE:

In general, no more than six symbol colors should be used on displays. These include white, red, green, yellow (or amber), magenta (or purple), and cyan (or aqua). These six colors plus black, gray, brown, and blue for background shading can be used effectively.[43]

Comment: The use of more than six symbol colors may degrade performance on search, identification, and coding tasks due both

to poorer discriminability (especially under high ambient light) and a loss of organizational value.[43]

133. ACCENTUATING COLOR DIFFERENCES:

To accentuate differences among colors, differences in the brightness of display colors should be used wherever possible.[43]

Comment: Although the terms luminance and brightness are often used interchangeably, they really refer to separate concepts. Luminance is a physical measure of the amount of light and can be measured by instrumentation. Brightness, however, is a person's perception of luminance and cannot be directly measured by instrumentation. An increase in luminance will normally lead to an increase in brightness, but the increase in brightness will not be a linear function of the luminance increase. In addition, objects displayed at equal luminances but in different colors may appear to vary in brightness.

134. RELATIVE BRIGHTNESS AND CHROMATICITY OF COLORS:

Since brightness differences are a source of information, the relative brightnesses of colors should remain the same over the total luminance range of the screen. Also, chromaticity (color quality) should track over the luminance range of the display.[43]

Comment: In addition to relative brightness changes, the hue (dominant wavelength) and saturation of colors may appear to change as luminance is varied. Hue changes may cause viewers to misname colors (e.g., red vs. orange), while saturation changes will cause confusion among colors that vary primarily in the amount of gray.[41]

135. COLOR CONVENTIONS:

Traditional warning and caution colors (red and amber or yellow) should be reserved solely for those purposes, as the use of these colors for other functions will degrade their alerting value. Color conventions include the following:

a. **Red is used to indicate an alarm condition.**

b. **Flashing red is used to indicate an emergency condition requiring immediate user action.**

c. **Yellow is used to indicate a caution condition.**

d. **Green is used to indicate a normal, in-tolerance condition.**

e. **White is used as a neutral color.**[14,42,43]

Comment: The handbook editors believe this guideline applies to cases where the simple colors are used to convey information by

themselves, as opposed to when they are used as parts of complex graphics (e.g., a red fire engine).

136. USE OF PURE BLUE:

Pure blue on a dark background should be avoided for text, for thin lines, and for high resolution information.[39]

Comment: The normal eye is blue-blind in the central fovea.

137. USE OF PURE RED AND PURE BLUE TOGETHER:

Simultaneous presentation of both pure red and pure blue (or to a lesser extent red and green, or blue and green) on a dark background may result in chromostereopsis (a three-dimensional effect) and should, therefore, be avoided unless chromostereopsis is acceptable or intentional.[39]

Comment: Chromostereopsis (the color-induced illusion of three dimensionality) is generally uncomfortable to view and should be avoided if the primary purpose of the display is to convey information rather than to entertain.

138. CHARACTER HEIGHTS AND COLOR DISCRIMINATION:

Table 22 shows minimum character heights below which color discrimination is expected to deteriorate. (Based on reference 43.)

Table 22. Minimum character sizes for some color discriminations.[1]

	Blue vs. Yellow	Red vs. Green
Minimum size on the retina	30 arcmin	15 arcmin
Minimum height, centimeters	Viewing distance/114.59, where distance is in centimeters	Viewing distance/229.18, where distance is in centimeters

[1] The formula for determining character height (h) upon which the table is based is as follows:

$$h = 2\left(\tan\left(\frac{\text{character size on the retina}}{2}\right)\right)(\text{viewing distance}),$$ where h and viewing distance are in centimeters, and character size on the retina is in degrees. [41]

Retinal character size is used because it is independent of viewing distance. Thus, one can tell whether a character that subtends 30 arcmin (its retinal size) can be read without knowing the distance at which it is viewed, but one could not tell whether a 0.3-cm- (0.12-in-) high character could be read without knowing the viewing distance.

Example of determining character height (in centimeters) using the formula shown in the table: what character height is needed if a user must discriminate between red and green at a viewing distance of 76.2 cm (30 in)? Character height = 76.2/229.18 = 0.33 cm (0.13 in). So, at a distance of 76.2 cm (30 in), a character height of not less than 0.33 cm (0.13 in) is recommended if the user must discriminate between red and green.

139. POLARITY:

Either display polarity—dark characters on a light background or light characters on a dark background—is acceptable provided it meets the other display requirements.[39]

Comment: The presentation of dark characters on a light background may reduce the effects of distracting reflections from the surface of the display. The effects, however, of disability glare (the loss of character contrast, for example) caused by superimposed reflections are the same for displays of either polarity. Cathode ray tube displays on which dark characters are presented on a light background appear to minimize the effect of reflections on the user's screen, but such displays may require a higher refresh rate in order not to appear to flicker.[39]

140. BRIGHTNESS/CONTRAST COMPENSATION:

An automatic brightness/contrast compensation system should be used. This permits the maintenance of acceptable image brightness and chromatic (color) differentiation under all ambient light conditions without the user having to manually make the adjustments.[43,44]

Comment: In general, three types of brightness control are needed to provide a satisfactory automatic compensation system: (1) a manual brightness control to accommodate individual differences in the visual sensitivity of users as well as the use of sunglasses or sun visors, (2) an automatic brightness/contrast compensation system that changes the display luminance as a function of the changing ambient light levels incident on the display (as detected by an internal light sensor integral to each display), and (3) an automatic brightness/contrast compensation system that changes the display symbol-to-background contrast as a function of changing luminance levels in the user's forward field of view (as detected by a remote, forward facing light sensor).[43]

141. LUMINANCE UNIFORMITY:

Luminance uniformity, the variation from the center to the edge of the active area of the display, should not vary by more than 50 percent of the center luminance.[39]

Comment: Luminance variations that occur gradually over the display surface may be quite large without being bothersome or even detectable, while much smaller luminance variations that occur in adjacent screen areas will be noticeable.[41]

142. RELATIVE DISCRIMINATION AND LUMINANCE DIFFERENCES:

For relative discrimination, adjacent areas on the display (e.g., sections of a pie chart) should have a luminance difference of at least 7 percent. Nonadjacent areas (e.g., in highlighted text) should have a luminance difference of at least 20 percent.[39]

143. FLASHING SYMBOLS:

Flashing may be used to draw attention to critical information or for danger conditions. No more than two different flash rates should be used. If a single flash rate is used, it should be 3 to 5 Hz. If two flash rates are used, the slow rate should be not less than 0.8 Hz and the fast rate should not be more than 5 Hz; the difference between the two rates should be at least 2 Hz. In any case, the percentage of time that the image is on (i.e., the duty cycle) should be greater than or equal to the time that it is off; a 50 percent duty cycle is preferred.[14,39]

Comment: Flashing symbols may become annoying and become a distraction. Users should be provided with a means to acknowledge the message and terminate the flashing.[41]

144. CHARACTER HEIGHT-TO-WIDTH RATIO:

The height-to-width ratio of a given character is the ratio of the vertical distance between the top and bottom edges (height), and the horizontal distance between the left and right edges (width) of a nonaccented capital letter. For fixed (as opposed to proportionally spaced) column presentations, the character height-to-width ratio should be between 1:0.7 and 1:0.9. For display formats requiring more than 80 characters on a line, ratios as low as 1:0.5 are permitted. For proportionally spaced presentations, a height-to-width ratio closer to 1:1 is permitted for some characters, for example, the capital letters M and W.[39]

145. MATRIX SIZE FOR SPECIAL CHARACTERS:

A 4 by 5 (width by height) character matrix should be the minimum matrix used for superscripts and for numerators and denominators of fractions that are to be displayed in a single character position. The 4 by 5 matrix may also be used for alphanumeric information not related to the user's task, such as copyright identification.[39]

Comment: References to matrix size and number of pixels do not apply to segmented-character liquid crystal and vacuum fluorescent displays.[41]

146. MATRIX SIZE FOR NUMERIC AND UPPER CASE CHARACTERS:

A 5 by 7 (width by height) character matrix should be the minimum matrix used for numeric and upper-case-only presentations. The vertical height should be increased upward by two pixel positions if diacritical marks are used.[39]

Comment: References to matrix size and number of pixels do not apply to segmented-character liquid crystal and vacuum fluorescent displays.[41]

147. MATRIX SIZE FOR READING OR LEGIBILITY:

Legibility is the rapid identification of single characters that may be presented in a noncontextual format. A 7 by 9 (width by height) character matrix should be the minimum matrix for tasks that require continuous reading for context, or when individual alphabetic character legibility is important. The vertical height should be increased upward by two pixel positions if diacritical marks are used. If lower case is used, the vertical height should be increased downward by at least one pixel position, preferably two or more, to accommodate descenders of lower case letters.[39]

Comment: References to matrix size and number of pixels do not apply to segmented-character liquid crystal and vacuum fluorescent displays.[41]

148. MATRIX SIZE FOR SYMBOL ROTATION:

When symbol rotation is required, a minimum character matrix of 8 by 11 (width by height) is required, with 15 by 21 preferred.[13,45]

Comment: Symbol rotation requires greater character addressability to counteract reduced legibility as a function of aliasing (jagged lines) introduced at irregular character positions. Also, references to matrix size and number of pixels do not apply to segmented-character liquid crystal and vacuum fluorescent displays.[41]

149. BETWEEN-CHARACTERS SPACING:

Between-characters spacing should be a minimum of 10 percent of character height. A two-pixel space between characters may enhance readability in some cases.[39]

Comment: References to matrix size and number of pixels do not apply to segmented-character liquid crystal and vacuum fluorescent displays.[41]

150. BETWEEN-LINES SPACING:

A minimum of two stroke widths or 15 percent of character height, whichever is greater, should be used for spacing between lines of text. The space between lines of text should not be used for upper case accent marks or for lower case descenders of characters.[39]

151. BETWEEN-WORDS SPACING:

A minimum of one character width (capital N for proportional spacing) should be used between words.[39]

152. FONT TYPE:

Script and other highly stylized fonts (e.g., shadow, calligraphy) should be avoided. Preference should be given to simple styles with straight lines and clear differences between O and 0 (zero) and between S and 5. Lincoln/Mitre and Leroy are preferred fonts.[38,46]

153. CHARACTER HEIGHT FOR LEGIBILITY:

Legibility is the rapid identification of single characters that may be presented in a noncontextual format. For a task in which legibility is important, character height should conform to the recommendations in table 23. (Based on reference 39.)

154. CHARACTER HEIGHT FOR READABILITY:

Readability is the ability to recognize the form of a word or group of words for contextual purposes. For a task in which readability is important, character height should conform to the recommendations in table 23. (Based on reference 39.)

155. CHARACTER HEIGHT FOR NONTIME-CRITICAL READING:

For a reading task in which identification of individual characters is not time-critical, character height should conform to the recommendation in table 23. (Based on reference 39.)

Table 23. Minimum character sizes for legibility and readability.

	For Legibility	For Readability	For a Reading Task in Which Identification of Individual Characters is Not Time Critical
	CHARACTER SIZE ON THE RETINA, ARCMINUTES		
Minimum	16	16	10
Preferred	20 to 22	20 to 22	–
Maximum	45	24	–

(Table continued on next page.)

Table 23. Minimum character sizes for legibility and readability (continued).

	For Legibility	For Readability	For a Reading Task in Which Identification of Individual Characters is Not Time Critical
	CHARACTER HEIGHT, CENTIMETERS[a]		
Minimum	Viewing distance/214.86[b]	Viewing distance/214.86[b]	Viewing distance/343.77[b]
Preferred	Viewing distance/171.89[b] to Viewing distance/156.26[b]	Viewing distance/171.89[b] to Viewing distance/156.26[b]	–
Maximum	Viewing distance/76.39[b]	Viewing distance/143.24[b]	–

[a] The formula for determining character height (h) upon which the table is based is as follows:

$h = 2\left(\tan\left(\frac{\text{character size on the retina}}{2}\right)\right)(\text{viewing distance})$, where h and viewing distance are in centimeters, and character size on the retina is in degrees.(41)

Retinal character size is used because it is independent of viewing distance. Thus, one can tell whether a character that subtends 30 arcmin (its retinal size) can be read without knowing the distance at which it is viewed, but one could not tell whether a 0.3-cm- (0.12-in-) high character could be read without knowing the viewing distance.

Example of determining character height (in centimeters) using the formula shown in the table: If readability is important, what is the minimum character height needed at a viewing distance of 101.6 cm (40 in)? Character height = 101.6/214.86 = 0.47 cm (0.19 in).

[b] Viewing distance is in centimeters.

156. MINIMUM VIEWING DISTANCE:

The minimum design viewing distance should be 30.5 cm (12 in).(39)

Comment: Shorter viewing distances pose a problem for older users, who typically have difficulty focusing on close objects due to presbyopia. Shorter viewing distances to in-vehicle displays may also increase the risk of physical injury to the user and to the display. And, shorter viewing distances to in-vehicle displays may increase the time required for users to visually transition from the display to the outside world (provided the accommodation distance of the display is not greater than the viewing distance).(41)

157. SYMBOL/IMAGE MOTION:

When moving symbols or images are displayed, motion should be smooth and without any unintended ratcheting or jerked motion. (Based on reference 47.)

Chapter 6. Guidelines for Specific Displays

In this chapter are presented guidelines specific to each of the displays selected for the handbook. General guidelines applicable to all the electronic displays in the handbook are in chapter 5.

Analog Indicators

158. WHEN TO USE:

Analog indicators should be used in preference to digital readouts when the data displayed are of qualitative as well as quantitative value (i.e., when trends, direction of movement, and more-than/less-than relationships are of value as well as the specific numeric value), or of qualitative value only. Analog indicators should not be used when the primary purpose is readout of precise quantitative information.[14]

159. PREFERRED TYPE:

The preferred type of analog indicator for most applications has a moving pointer and a fixed scale. (The scale may be circular, curved [arc], horizontal-straight, or vertical-straight.) With a moving pointer, fixed scale indicator, both the scale progression and control movement are compatible with user expectancies. Avoid a fixed pointer, moving scale indicator.[14] **(See guideline 40.)**

Comment: This guideline also applies to analog indicators represented on the following electronic displays that are included in this handbook:

- Cathode ray tube.
- Electroluminescent.
- Head-up display.
- Light-emitting diode: matrix addressed.
- Liquid crystal display: transflective, matrix addressed; and transmissive, matrix addressed.
- Vacuum fluorescent display: matrix addressed.

160. SCALE GRADUATION TYPE:

Scales should be graduated linearly even if the function being controlled is nonlinear. If the nonlinearity of the function causes too much scale compression, making readout or adjustment difficult, another type of device such as a moving-tape indicator would be preferred over use of a nonlinear scale. Logarithmic scales should be avoided unless needed to display a large range of values.[14,48]

Comment: This guideline also applies to analog indicators represented on the following electronic displays that are included in this handbook:

- Cathode ray tube.
- Electroluminescent.
- Head-up display.
- Light-emitting diode: matrix addressed.
- Liquid crystal display: transflective, matrix addressed; and transmissive, matrix addressed.
- Vacuum fluorescent display: matrix addressed.

161. SCALE COMPATIBILITY WHEN COMPARING TWO OR MORE DISPLAYS:
When two or more displays of the same parameter must be compared (e.g., commanded speed and actual speed), scales should be compatible in numerical progression and scale organization.[48]

Comment: This guideline also applies to analog indicators represented on the following electronic displays that are included in this handbook:

- Cathode ray tube.
- Electroluminescent.
- Head-up display.
- Light-emitting diode: matrix addressed.
- Liquid crystal display: transflective, matrix addressed; and transmissive, matrix addressed.
- Vacuum fluorescent display: matrix addressed.

162. USE OF DOUBLE POINTERS OR SCALES:
Avoid the use of analog indicators in which double pointers or scales are used.[10]

Comment: This guideline also applies to analog indicators represented on the following electronic displays that are included in this handbook:

- Cathode ray tube.
- Electroluminescent.
- Head-up display.
- Light-emitting diode: matrix addressed.
- Liquid crystal display: transflective, matrix addressed; and transmissive, matrix addressed.
- Vacuum fluorescent display: matrix addressed.

163. COLOR OF MARKINGS:

Instrument faces for use when night or dark adaptation is not critical are more easily seen if the markings are black on a light colored face. Even though the instrument may have to be illuminated at night (e.g., an automobile speedometer), the lighter background can still be dimly lit and provide a more readable display.[10]

Comment: This guideline also applies to analog indicators represented on the following electronic displays that are included in this handbook:

- Cathode ray tube.
- Electroluminescent.
- Head-up display.
- Light-emitting diode: matrix addressed.
- Liquid crystal display: transflective, matrix addressed; and transmissive, matrix addressed.
- Vacuum fluorescent display: matrix addressed.

164. LUMINANCE CONTRAST:

A luminance contrast of at least 0.75 should be provided between the scale face and the markings and pointer. (Luminance contrast, C, is:

$C = \frac{L_1 - L_2}{L_2}$**, where L_1 is the higher luminance and L_2 is the lower luminance.)**[14]

Comment: This guideline also applies to analog indicators represented on the following electronic displays that are included in this handbook:

- Cathode ray tube.
- Electroluminescent.
- Head-up display.
- Light-emitting diode: matrix addressed.
- Liquid crystal display: transflective, matrix addressed; and transmissive, matrix addressed.
- Vacuum fluorescent display: matrix addressed.

165. CHARACTER HEIGHTS FOR FIXED SCALE INDICATORS:

On a fixed scale indicator, the heights of numbers, control and switch markings, and emergency instructions should be as follows:

a. For low luminance (0.1 to 3.4 cd/m^2 [0.03 to 1 fl]):

$$\text{height} = \frac{(\text{viewing distance})(0.38)}{71} \text{ to } \frac{(\text{viewing distance})(0.76)}{71}, \text{ where}$$

height and viewing distance are in centimeters.

b. For high luminance (>3.4 cd/m^2 [1 fl]):

$$\text{height} = \frac{(\text{viewing distance})(0.25)}{71} \text{ to } \frac{(\text{viewing distance})(0.51)}{71}, \text{ where}$$

height and viewing distance are in centimeters. (Based on reference 25.)

Comment: Approximately 3 cd/m^2 (0.9 fl) marks a break point between scotopic vision (low-light, night vision) and photopic vision. Visual acuity and color discrimination are reduced in scotopic conditions, requiring larger characters.[41]

This guideline also applies to analog indicators represented on the following electronic displays that are included in this handbook:

- Cathode ray tube.
- Electroluminescent.
- Head-up display.
- Light-emitting diode: matrix addressed.
- Liquid crystal display: transflective, matrix addressed; and transmissive, matrix addressed.
- Vacuum fluorescent display: matrix addressed.

166. STROKE WIDTH OF NUMBERS:

The stroke width of numbers should be from one-sixth to one-eighth of the number height.[25]

Comment: This guideline also applies to analog indicators represented on the following electronic displays that are included in this handbook:

- Cathode ray tube.
- Electroluminescent.
- Head-up display.
- Light-emitting diode: matrix addressed.

- Liquid crystal display: transflective, matrix addressed; and transmissive, matrix addressed.
- Vacuum fluorescent display: matrix addressed.

167. WIDTH OF NUMBERS:

The width of all numbers should be three-fifths of the height, except for the 4, which should be one stroke width wider than the others, and the 1, which should be one stroke width wide.[25]

Comment: This guideline also applies to analog indicators represented on the following electronic displays that are included in this handbook:

- Cathode ray tube.
- Electroluminescent.
- Head-up display.
- Light-emitting diode: matrix addressed.
- Liquid crystal display: transflective, matrix addressed; and transmissive, matrix addressed.
- Vacuum fluorescent display: matrix addressed.

168. SPECIFICATIONS FOR GRADUATION MARKS:

Graduation marks should conform to the specifications shown in table 24. (Based on references 14,48.)

Comment: This guideline also applies to analog indicators represented on the following electronic displays that are included in this handbook:

- Cathode ray tube.
- Electroluminescent.
- Head-up display.
- Light-emitting diode: matrix addressed.
- Liquid crystal display: transflective, matrix addressed; and transmissive, matrix addressed.
- Vacuum fluorescent display: matrix addressed.

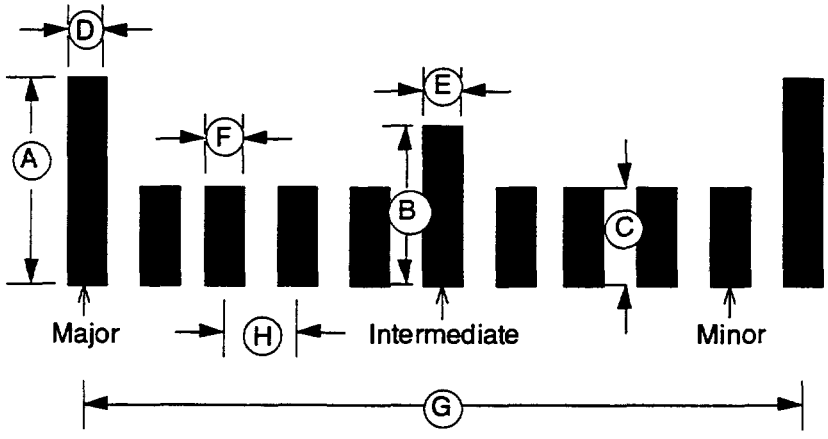

Figure 23. Reference figure for graduation mark specifications.

Table 24. Specifications for graduation marks. (See figure 23 for reference letters.)

	Viewing Distance	
	≤45.7 cm (1.5 ft)	>45.7 cm (1.5 ft)
Graduation Mark Height Major (A)	.56 cm (.22 in)	viewing distance/91.3, where height and viewing distance are in centimeters.
Intermediate (B)	.41 cm (.16 in)	viewing distance/128.5, where height and viewing distance are in centimeters.
Minor (C)	.23 cm (.09 in)	viewing distance/212.0, where height and viewing distance are in centimeters.
Graduation Mark Width Major (D)	(.00125)(viewing distance), where width and viewing distance are in centimeters.	(.00125)(viewing distance), where width and viewing distance are in centimeters.
Intermediate (E)	(.00107)(viewing distance), where width and viewing distance are in centimeters.	(.00107)(viewing distance), where width and viewing distance are in centimeters.
Minor (F)	(.0009)(viewing distance), where width and viewing distance are in centimeters.	(.0009)(viewing distance), where width and viewing distance are in centimeters.
Separation Between Midpoints Between major marks (G)	(.025)(viewing distance), where separation and viewing distance are in centimeters.	(.025)(viewing distance), where separation and viewing distance are in centimeters.
Between major and minor marks; between intermediate and minor marks; between two minor marks (H)	(.0025)(viewing distance), where separation and viewing distance are in centimeters.	(.0025)(viewing distance), where separation and viewing distance are in centimeters.

169. GENERAL GUIDELINES FOR SCALE MARKINGS:

Scale markings should conform to the following:

a. **Graduation marks should be limited in number to the accuracy required.**

b. **No more than three sizes of graduation marks should be used on any scale.**

c. **Major, intermediate, and minor graduation marks should be used if there are five or more graduations between numbers.**

d. **Major and minor graduation marks should be used if there are up to four graduations between numbers.**

e. **The number of graduation marks between numbered marks should not exceed nine.**

f. **Scale graduations should be in increments of one, two, or five, or decimal multiples thereof.**

g. **Display scales should start at zero, except where this would be inappropriate for the function involved.**[14,29,48]

Comment: This guideline also applies to analog indicators represented on the following electronic displays that are included in this handbook:

- Cathode ray tube.
- Electroluminescent.
- Head-up display.
- Light-emitting diode: matrix addressed.
- Liquid crystal display: transflective, matrix addressed; and transmissive, matrix addressed.
- Vacuum fluorescent display: matrix addressed.

170. ORIENTATION OF NUMBERS:

On a fixed scale, numbers should be vertically oriented.[14]

Comment: This guideline also applies to analog indicators represented on the following electronic displays that are included in this handbook:

- Cathode ray tube.
- Electroluminescent.
- Head-up display.
- Light-emitting diode: matrix addressed.
- Liquid crystal display: transflective, matrix addressed; and transmissive, matrix addressed.
- Vacuum fluorescent display: matrix addressed.

171. DIRECTION OF NUMBERS INCREASE:

Numbered scales should increase clockwise, from left to right, or from bottom to top, depending on the scale layout (circular or arc, horizontal-straight, or vertical-straight, respectively).[14]

Comment: This guideline also applies to analog indicators represented on the following electronic displays that are included in this handbook:

- Cathode ray tube.
- Electroluminescent.
- Head-up display.
- Light-emitting diode: matrix addressed.
- Liquid crystal display: transflective, matrix addressed; and transmissive, matrix addressed.
- Vacuum fluorescent display: matrix addressed.

172. TYPE OF NUMBER FOR GRADUATION MARKS:

Except for measurements that are normally expressed in decimal fractions, whole numbers should be used for major graduation marks. Intermediate graduation marks should ordinarily not be numbered.[14]

Comment: It is assumed that minor graduation marks should also not ordinarily be numbered.

This guideline also applies to analog indicators represented on the following electronic displays that are included in this handbook:

- Cathode ray tube.
- Electroluminescent.
- Head-up display.
- Light-emitting diode: matrix addressed.
- Liquid crystal display: transflective, matrix addressed; and transmissive, matrix addressed.
- Vacuum fluorescent display: matrix addressed.

173. GRADUATION MARKS AT SCALE START AND END:

Scales should start and end on major graduation marks, even if this puts either or both ends beyond the usable range of the scale. For example, if the maximum speed that can be read on a speedometer is 82 mi/h, the scale should go to at least 85 mi/h, where there could be a major graduation mark.[14]

Comment: This guideline also applies to analog indicators represented on the following electronic displays that are included in this handbook:

- Cathode ray tube.
- Electroluminescent.
- Head-up display.
- Light-emitting diode: matrix addressed.
- Liquid crystal display: transflective, matrix addressed; and transmissive, matrix addressed.
- Vacuum fluorescent display: matrix addressed.

174. INTERPOLATION:

Ordinarily, scales should be designed so that interpolation between graduation marks is not necessary; but when space is limited, it is better to require interpolated readings than to clutter the dial with crowded graduation marks.[25]

Comment: This guideline also applies to analog indicators represented on the following electronic displays that are included in this handbook:

- Cathode ray tube.
- Electroluminescent.
- Head-up display.
- Light-emitting diode: matrix addressed.
- Liquid crystal display: transflective, matrix addressed; and transmissive, matrix addressed.
- Vacuum fluorescent display: matrix addressed.

175. POINTER SHAPE:

For best legibility, indicators with scales should have pointers that are relatively wide at the pivot, tapering gradually to a fine tip, arrowhead, or teardrop that is the same width as the smallest graduation mark (see figure 24 for preferred shapes). If a pointer has a tail on it, the observer can judge slight movements of the pointer better than if the pointer does not have a tail.[14,48]

Comment: This guideline also applies to analog indicators represented on the following electronic displays that are included in this handbook:

- Cathode ray tube.
- Electroluminescent.
- Head-up display.

- Light-emitting diode: matrix addressed.
- Liquid crystal display: transflective, matrix addressed; and transmissive, matrix addressed.
- Vacuum fluorescent display: matrix addressed.

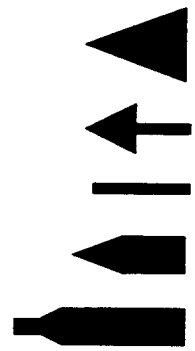

Figure 24. Preferred pointer tip shapes.

176. POINTER LENGTH:

Pointers should meet, but not overlap, the shortest scale graduation mark.[14]

Comment: This guideline also applies to analog indicators represented on the following electronic displays that are included in this handbook:

- Cathode ray tube.
- Electroluminescent.
- Head-up display.
- Light-emitting diode: matrix addressed.
- Liquid crystal display: transflective, matrix addressed; and transmissive, matrix addressed.
- Vacuum fluorescent display: matrix addressed.

177. POSITION OF ZERO ON SCALES WITH POSITIVE AND NEGATIVE NUMBERS:

When positive and negative values around zero are being displayed:

a. **On circular and arc indicators, locate the zero at 9 o'clock or 12 o'clock.**

b. **On horizontal-straight indicators, locate the zero at 12 o'clock.**

c. **On vertical-straight indicators, locate the zero at 9 o'clock.** (Based on references 14,24.)

Comment: This guideline also applies to analog indicators represented on the following electronic displays that are included in this handbook:

- Cathode ray tube.
- Electroluminescent.
- Head-up display.
- Light-emitting diode: matrix addressed.
- Liquid crystal display: transflective, matrix addressed; and transmissive, matrix addressed.
- Vacuum fluorescent display: matrix addressed.

178. POINTER PIVOT LOCATION:

Pointers should be pivoted at the right for vertical scales, and at the bottom for horizontal scales.(14)

Comment: This guideline also applies to analog indicators represented on the following electronic displays that are included in this handbook:

- Cathode ray tube.
- Electroluminescent.
- Head-up display.
- Light-emitting diode: matrix addressed.
- Liquid crystal display: transflective, matrix addressed; and transmissive, matrix addressed.
- Vacuum fluorescent display: matrix addressed.

179. POINTER MOUNTING:

The pointer should be mounted as close as possible to the face of the dial to minimize parallax.(14)

180. POINTER COLOR:

Pointer color from the tip to the center of the dial should be the same as the color of the graduation marks. The tail of the pointer should be the same color as the dial face unless the tail is used as an indicator itself or unless the pointer is used for horizontal alignment.(14)

Comment: This guideline also applies to analog indicators represented on the following electronic displays that are included in this handbook:

- Cathode ray tube.
- Electroluminescent.
- Head-up display.

- Light-emitting diode: matrix addressed.
- Liquid crystal display: transflective, matrix addressed; and transmissive, matrix addressed.
- Vacuum fluorescent display: matrix addressed.

181. METHODS FOR IMPROVING DUAL POINTER VISIBILITY AND DISCRIMINABILITY:

Except for clocks or watches (which often have three hands), not more than two coaxial pointers should be used on a single-dial indicator. Methods for improving the visibility and discriminability of dual pointers include:

a. The two pointers should be different colors.

b. The tails on the two pointers should be different lengths.

c. Each of the pointer tips should be close to the graduation marks.[10,14]

Comment: This guideline also applies to analog indicators represented on the following electronic displays that are included in this handbook:

- Cathode ray tube.
- Electroluminescent.
- Head-up display.
- Light-emitting diode: matrix addressed.
- Liquid crystal display: transflective, matrix addressed; and transmissive, matrix addressed.
- Vacuum fluorescent display: matrix addressed.

182. POINTER TAIL LENGTH:

The tail on a pointer should not be more than one-third the length of the pointing segment.[10]

Comment: This guideline also applies to analog indicators represented on the following electronic displays that are included in this handbook:

- Cathode ray tube.
- Electroluminescent.
- Head-up display.
- Light-emitting diode: matrix addressed.
- Liquid crystal display: transflective, matrix addressed; and transmissive, matrix addressed.
- Vacuum fluorescent display: matrix addressed.

183. DOUBLE-ENDED POINTERS:

With reciprocal (double-ended) pointers, it should be made easy to distinguish the end that indicates the reading.[14]

Comment: This guideline also applies to analog indicators represented on the following electronic displays that are included in this handbook:

- Cathode ray tube.
- Electroluminescent.
- Head-up display.
- Light-emitting diode: matrix addressed.
- Liquid crystal display: transflective, matrix addressed; and transmissive, matrix addressed.
- Vacuum fluorescent display: matrix addressed.

184. USE IN MAKING SETTINGS:

If the indicator is used for making settings, such as tuning a particular channel, it is usually desirable to cover the unused portion of the dial face. The open window should be large enough to show at least one numbered graduation on each side of any setting.[14]

Comment: This guideline also applies to analog indicators represented on the following electronic displays that are included in this handbook:

- Cathode ray tube.
- Electroluminescent.
- Head-up display.
- Light-emitting diode: matrix addressed.
- Liquid crystal display: transflective, matrix addressed; and transmissive, matrix addressed.
- Vacuum fluorescent display: matrix addressed.

185. ZONE MARKINGS:

Zone markings should be used to show the operational implications of various readings such as the operating range, upper and/or lower limits, and danger range. In addition:

a. **Zone markings should be conspicuous and distinctly different for different zones.**

b. **Zone markings should not interfere with the reading of quantitative markings.**

c. **If color is used for coding, the following conventions should be followed:**

- **Red should be used to indicate an alarm condition, alerting the user that the system or a portion of the system is inoperative.**
- **Yellow should be used to indicate a caution condition, advising the user that a condition exists that is marginal.**
- **Green should be used to indicate a normal, in-tolerance condition.**
- **White should be used as a neutral color, indicating a system condition that does not have right or wrong implications.** (See references 14,41,48,49.)

Comment: This guideline also applies to analog indicators represented on the following electronic displays that are included in this handbook:

- Cathode ray tube.
- Electroluminescent.
- Head-up display.
- Light-emitting diode: matrix addressed.
- Liquid crystal display: transflective, matrix addressed; and transmissive, matrix addressed.
- Vacuum fluorescent display: matrix addressed.

186. WHEN AN OPERATING CONDITION ALWAYS FALLS WITHIN A LIMITED RANGE OF THE SCALE:

When a certain operating condition (such as normal operating temperature) always falls within a limited range of the total scale, that range should be made readily identifiable by means of pattern, color, or shape coding applied to the face of the instrument.[14]

Comment: This guideline also applies to analog indicators represented on the following electronic displays that are included in this handbook:

- Cathode ray tube.
- Electroluminescent.
- Head-up display.
- Light-emitting diode: matrix addressed.
- Liquid crystal display: transflective, matrix addressed; and transmissive, matrix addressed.
- Vacuum fluorescent display: matrix addressed.

187. WHEN LESS THAN A FULL ROTATION OF THE POINTER COVERS THE SCALE:

When less than a full rotation of the pointer is required to cover the entire scale, scale end-points should be indicated by a break in the scale. The break should be at least one numbered interval in length, and should be oriented at 6 o'clock.[48]

Comment: This guideline also applies to analog indicators represented on the following electronic displays that are included in this handbook:

- Cathode ray tube.
- Electroluminescent.
- Head-up display.
- Light-emitting diode: matrix addressed.
- Liquid crystal display: transflective, matrix addressed; and transmissive, matrix addressed.
- Vacuum fluorescent display: matrix addressed.

188. MULTIREVOLUTION POINTER MOVEMENT:

When multirevolution pointer movement is involved (e.g., on a clock), zero should be at 12 o'clock and there should be no break between scale ends.[14]

Comment: This guideline also applies to analog indicators represented on the following electronic displays that are included in this handbook:

- Cathode ray tube.
- Electroluminescent.
- Head-up display.
- Light-emitting diode: matrix addressed.
- Liquid crystal display: transflective, matrix addressed; and transmissive, matrix addressed.
- Vacuum fluorescent display: matrix addressed.

189. LOCATION OF NUMBERS:

Numbers should be located on the side of the graduation marks opposite the pointer. Exception 1: If readout accuracy is not critical, such as when the gross relationship between the pointer and the number is all that is required, the numbers may be located inside the graduation marks (see figure 25). Exception 2: If space is limited (for curved or arc scales), numbers may be placed inside the graduation marks to avoid undue constriction of the scale (see figure 25).[14]

Comment: This guideline also applies to analog indicators represented on the following electronic displays that are included in this handbook:

- Cathode ray tube.
- Electroluminescent.
- Head-up display.
- Light-emitting diode: matrix addressed.
- Liquid crystal display: transflective, matrix addressed; and transmissive, matrix addressed.
- Vacuum fluorescent display: matrix addressed.

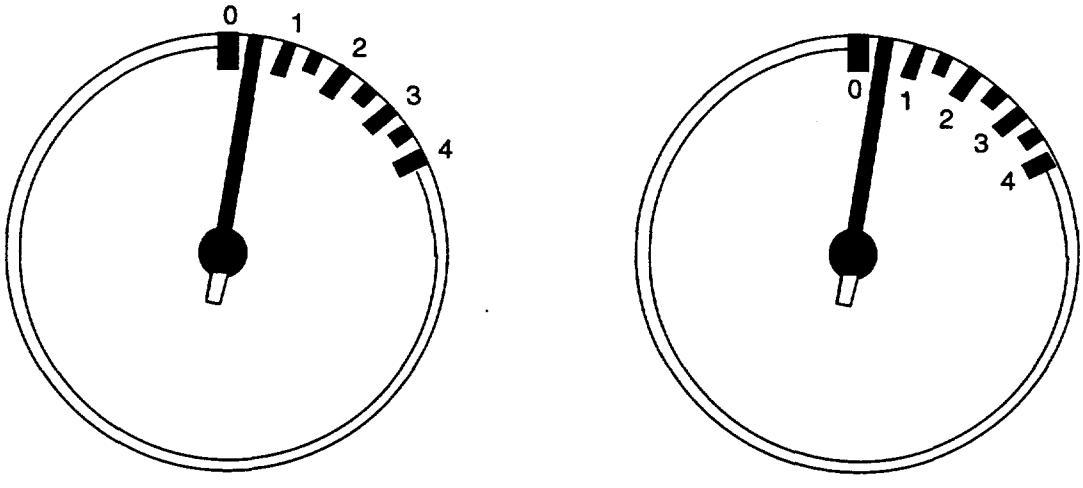

(a) Normal number location. (b) Acceptable number location.

Figure 25. Normal number location and acceptable number location when readout accuracy is not critical or space is limited.

Cathode Ray Tube (CRT) Displays

DEFINITION:

A cathode ray tube (CRT) display produces light by bombarding a phosphor-covered face plate with one or more electron beams. On a raster CRT display, the electron beam sweeps across the entire display on each refresh cycle, illuminating appropriate points as it comes to them. On a stroke writing CRT display, the electron beam is directed to only those points on the display that are to be illuminated. Some CRT's may use both raster and stroke writing, although raster CRT's are by far the most common commercialized form of the CRT. Cathode ray tube image color is controlled by the selection of phosphors, and a variety of

phosphor colors is available for monochrome as well as full-color CRT's in both stroke and raster formats.

These guidelines apply to both raster and stroke-written CRT's, but do not apply to developmental flat-panel CRT's such as field-emitter array displays.

190. WHEN TO USE:

A CRT should be used for text and graphics applications where display visibility from multiple viewer positions, high display brightness, high display mean time between failures, high display resolution, and a large range of display colors are more important than the display power consumption and physical display volume. Stroke CRT's should be selected over raster CRT's when high symbol luminance is more important than the need to display filled or shaded objects and backgrounds.

191. USE OF GENERAL DISPLAY GUIDELINES:

The design and use of CRT displays should conform to the applicable general guidelines for electronic visual displays that are in chapter 5.

192. IMAGE QUALITY:

The image on a CRT display should appear to be stable and free of geometric distortion.[39]

Comment: Sources of CRT instability include flicker and jitter. Flicker is associated with the following display attributes:

- Low refresh rate.
- Short phosphor persistence.
- High luminance.
- Wide field of view.

Jitter is independent of these attributes and is an artifact of imperfect control of the electron beam.[41]

193. REFRESH RATE:

CRT's should use a noninterlaced refresh rate of at least 70 Hz. (Based on reference 40.)

Comment: *Noninterlaced* means that the entire picture is drawn each time the electron beam moves across the display. The guideline assumes that display luminance will at times exceed 100 cd/m^2 (29.2 fl). Display flicker will become more noticeable as display luminance increases.

194. LINES PER SYMBOL HEIGHT:

CRT's should use a minimum of 16 lines per symbol height. (Based on reference 50.)

195. MISCONVERGENCE:

In no case should misconvergence cause a line, symbol, or character color or form to be ambiguous. (Based on reference 51.)

Comment: The perceptual consequence of misconvergence is the apparent separation of color primaries that should ordinarily overlap to form a single pixel. Misconverged CRT's present white lines as partially overlapped red, green, and blue lines.[41]

Counters

196. WHEN TO USE:

Counters should be used for presenting large ranges of quantitative data when users must make quick, precise readings but need not keep track of continuous trends.[14]

Comment: This guideline also applies to counters represented on the following electronic displays that are included in this handbook:

- Cathode ray tube.
- Electroluminescent.
- Head-up display.
- Light-emitting diode: matrix addressed.
- Liquid crystal display: transflective, matrix addressed; and transmissive, matrix addressed.
- Vacuum fluorescent display: matrix addressed.

197. HOW NUMBERS SHOULD CHANGE:

The numbers on a counter should change by snap action rather than continuously. Exception: When numbers on right-hand drums do not need to be read accurately, they may move in a continuous motion. In such cases, at least two of the numbers should be visible (see figure 26[d]).[14]

Comment: This guideline also applies to counters represented on the following electronic displays that are included in this handbook:

- Cathode ray tube.
- Electroluminescent.
- Head-up display.

- Light-emitting diode: matrix addressed.
- Liquid crystal display: transflective, matrix addressed; and transmissive, matrix addressed.
- Vacuum fluorescent display: matrix addressed.

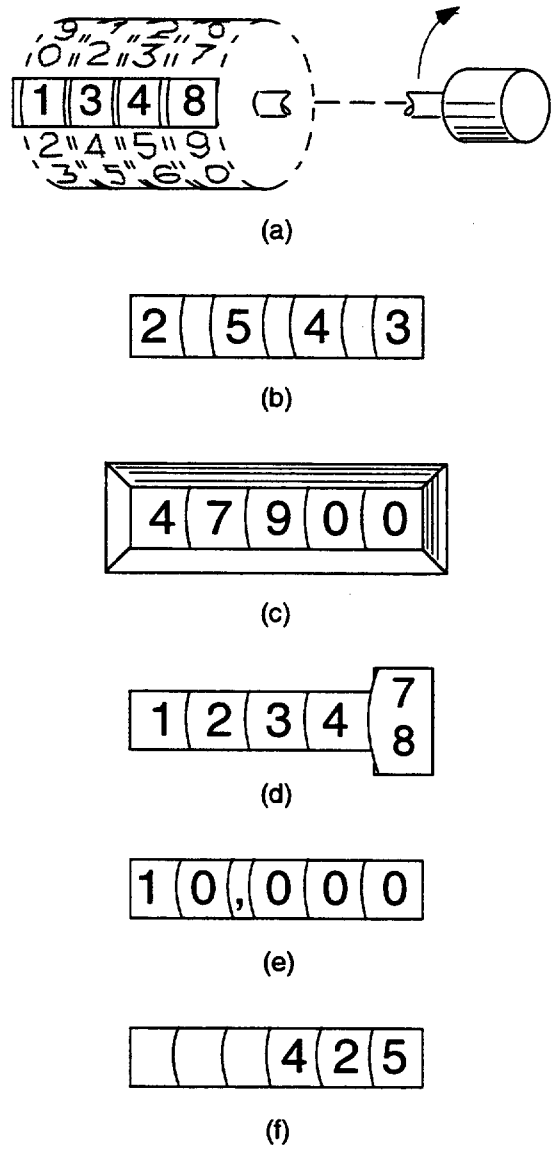

Figure 26. Counter design features.

198. FINISH ON DRUM SURFACE AND SURROUND:

The surface of the drums and surrounding areas on a counter should have a matte finish to minimize glare.[48]

199. RATE OF NUMBERS CHANGE:

If the user must read numbers consecutively, numbers on a counter should not change faster than twice per second. Odometers and hour meters are exceptions to this rule.[14]

Comment: This guideline also applies to counters represented on the following electronic displays that are included in this handbook:

- Cathode ray tube.
- Electroluminescent.
- Head-up display.
- Light-emitting diode: matrix addressed.
- Liquid crystal display: transflective, matrix addressed; and transmissive, matrix addressed.
- Vacuum fluorescent display: matrix addressed.

200. RESETTING COUNTERS USED TO INDICATE SEQUENCING OF EQUIPMENT:

Counters used to indicate sequencing of equipment should be designed so they reset automatically when the sequence is completed. Manual resetting should also be provided, and it can be accomplished in one of two ways:

a. **With a knob, which should rotate clockwise to reset the counter.**
b. **With a pushbutton. Actuating force required should not exceed 16.7 N (3.8 lbf).**[14]

Comment: This guideline also applies to counters represented on the following electronic displays that are included in this handbook:

- Cathode ray tube.
- Electroluminescent.
- Head-up display.
- Light-emitting diode: matrix addressed.
- Liquid crystal display: transflective, matrix addressed; and transmissive, matrix addressed.
- Vacuum fluorescent display: matrix addressed.

201. LAYOUT OF NUMBERS:

Numbers on counters should read horizontally, from left to right, rather than vertically.[14]

Comment: This guideline also applies to counters represented on the following electronic displays that are included in this handbook:

- Cathode ray tube.
- Electroluminescent.
- Head-up display.
- Light-emitting diode: matrix addressed.
- Liquid crystal display: transflective, matrix addressed; and transmissive, matrix addressed.
- Vacuum fluorescent display: matrix addressed.

202. SPACING BETWEEN NUMBER DRUMS:

Large horizontal spacing between number drums on a counter should be avoided. Normal spacing should be between one-fourth and one-half the numeral width.[14]

Comment: This guideline also applies to counters represented on the following electronic displays that are included in this handbook:

- Cathode ray tube.
- Electroluminescent.
- Head-up display.
- Light-emitting diode: matrix addressed.
- Liquid crystal display: transflective, matrix addressed; and transmissive, matrix addressed.
- Vacuum fluorescent display: matrix addressed.

203. COUNTER FRAME COLOR:

When only a small area of the counter drum is visible around each number, the counter frame should be the same color as the drum.[14]

Comment: This guideline also applies to counters represented on the following electronic displays that are included in this handbook:

- Cathode ray tube.
- Electroluminescent.
- Head-up display.
- Light-emitting diode: matrix addressed.
- Liquid crystal display: transflective, matrix addressed; and transmissive, matrix addressed.
- Vacuum fluorescent display: matrix addressed.

204. SPECIFICATIONS:

Counters should conform to the specifications shown in table 25.[14]

Comment: This guideline also applies to counters represented on the following electronic displays that are included in this handbook:

- Cathode ray tube.
- Electroluminescent.
- Head-up display.
- Light-emitting diode: matrix addressed.
- Liquid crystal display: transflective, matrix addressed; and transmissive, matrix addressed.
- Vacuum fluorescent display: matrix addressed.

Table 25. Character sizes and separations for counters.

Viewing Distance	Number Height[1]	Number Width	Number Stroke Width	Minimum Separation Between Numbers
NORMAL ILLUMINATION: ABOVE 3.4 CD/M^2 (1 FL)				
710 mm (28 in)	3.8 mm (.15 in)	3.8 mm (.15 in)	.94 mm (.04 in)	.64 mm (.03 in)
910 mm (35 in)	4.8 mm (.19 in)	4.8 mm (.19 in)	1.2 mm (.05 in)	.81 mm (.03 in)
1525 mm (59 in)	7.9 mm (.31 in)	7.9 mm (.31 in)	1.3 mm (.05 in)	1.3 mm (.05 in)
LOW ILLUMINATION: .1 TO 3.4 CD/M^2 (.03 TO 1 FL)				
710 mm (28 in)	5.6 mm (.22 in)	5.6 mm (.22 in)	.94 mm (.04 in)	.94 mm (.04 in)
910 mm (35 in)	7.1 mm (.28 in)	7.1 mm (.28 in)	1.2 mm (.05 in)	1.2 mm (.05 in)
1525 mm (59 in)	13.0 mm (.51 in)	13.0 mm (.51 in)	2.1 mm (.08 in)	2.1 mm (.08 in)

[1] For viewing distances less than 710 mm (28 in), numbers should be at least 3 mm (0.12 in) high.

205. COUNTER DRUMS NUMBERING:

Counter drums should be numbered so that a clockwise rotation of the drums and/or reset control produces increasing numerical values (see figure 26[a]).[14]

Comment: This guideline also applies to counters represented on the following electronic displays that are included in this handbook:

- Cathode ray tube.
- Electroluminescent.
- Head-up display.
- Light-emitting diode: matrix addressed.

- Liquid crystal display: transflective, matrix addressed; and transmissive, matrix addressed.
- Vacuum fluorescent display: matrix addressed.

206. NUMBER HEIGHT-TO-WIDTH RATIO:

The number height-to-width ratio on a counter should be within the range of 5:3 to 1:1, with 1:1 being preferred except for the number 1.[14]

Comment: This guideline also applies to counters represented on the following electronic displays that are included in this handbook:

- Cathode ray tube.
- Electroluminescent.
- Head-up display.
- Light-emitting diode: matrix addressed.
- Liquid crystal display: transflective, matrix addressed; and transmissive, matrix addressed.
- Vacuum fluorescent display: matrix addressed.

207. BETWEEN-NUMBERS SPACING:

Spacing between adjacent numerals on a counter should not exceed one-fourth the width of wide numerals or one-half the width of narrow numerals when several numbers are to be read as a total value (see figure 26[b]).[14]

Comment: This guideline also applies to counters represented on the following electronic displays that are included in this handbook:

- Cathode ray tube.
- Electroluminescent.
- Head-up display.
- Light-emitting diode: matrix addressed.
- Liquid crystal display: transflective, matrix addressed; and transmissive, matrix addressed.
- Vacuum fluorescent display: matrix addressed.

208. MOUNTING OF COUNTER DRUMS:

Counter drums should be mounted as close to the front panel surface as practical and the edges of the viewing window should be beveled to provide at least a 45° off-angle view of the display (see figure 26[c]).[14]

209. DECIMAL POINTS AND COMMAS:

Decimal points on a counter may be inserted within the viewing window, or placed on the panel when the position remains constant. Commas should not be used unless more than four numbers appear in the window (see figure 26[e]).[14]

Comment: This guideline also applies to counters represented on the following electronic displays that are included in this handbook:

- Cathode ray tube.
- Electroluminescent.
- Head-up display.
- Light-emitting diode: matrix addressed.
- Liquid crystal display: transflective, matrix addressed; and transmissive, matrix addressed.
- Vacuum fluorescent display: matrix addressed.

210. NUMBERS WITH MORE THAN FIVE DIGITS:

Numbers on a counter having more than five digits should have groups of three digits separated by either blank space equivalent to one-half the width of one character or by commas. Grouping should start from the right.[49]

Comment: This guideline also applies to counters represented on the following electronic displays that are included in this handbook:

- Cathode ray tube.
- Electroluminescent.
- Head-up display.
- Light-emitting diode: matrix addressed.
- Liquid crystal display: transflective, matrix addressed; and transmissive, matrix addressed.
- Vacuum fluorescent display: matrix addressed.

211. LEADING ZEROS:

If left-hand numbers on a counter are seldom used, a blanking system should be provided rather than presenting several leading zeros. The blanking device should expose left-hand drums only when a nonzero number is displayed (see figure 26[f]).[14]

Comment: This guideline also applies to counters represented on the following electronic displays that are included in this handbook:

- Cathode ray tube.
- Electroluminescent.
- Head-up display.
- Light-emitting diode: matrix addressed.
- Liquid crystal display: transflective, matrix addressed; and transmissive, matrix addressed.
- Vacuum fluorescent display: matrix addressed.

212. CONTRAST BETWEEN CHARACTERS AND IMMEDIATE BACKGROUND:
Contrast between characters and the immediate background should always be maximized. Black on white provides maximum visibility under normal illumination conditions.[29]

Comment: This guideline also applies to counters represented on the following electronic displays that are included in this handbook:

- Cathode ray tube.
- Electroluminescent.
- Head-up display.
- Light-emitting diode: matrix addressed.
- Liquid crystal display: transflective, matrix addressed; and transmissive, matrix addressed.
- Vacuum fluorescent display: matrix addressed.

213. NUMBER OF DIGITS IN AN OPEN WINDOW:
No more than one digit should appear in an open window at one time. Exception: When numbers on right-hand drums do not need to be read accurately, they may move in a continuous motion. In such cases, at least two of the numbers should be visible (see figure 26[d]).[14,29]

Comment: This guideline also applies to counters represented on the following electronic displays that are included in this handbook:

- Cathode ray tube.
- Electroluminescent.
- Head-up display.
- Light-emitting diode: matrix addressed.
- Liquid crystal display: transflective, matrix addressed; and transmissive, matrix addressed.
- Vacuum fluorescent display: matrix addressed.

214. DIGITAL DISPLAY ILLUMINATION:

Digital displays should be self-illuminated when used in an area in which ambient illumination will provide display luminance below 3.5 cd/m^2 (1 fl).[49]

Comment: This guideline also applies to counters represented on the following electronic displays that are included in this handbook:

- Cathode ray tube.
- Electroluminescent.
- Head-up display.
- Light-emitting diode: matrix addressed.
- Liquid crystal display: transflective, matrix addressed; and transmissive, matrix addressed.
- Vacuum fluorescent display: matrix addressed.

Electroluminescent (EL) Displays

DEFINITION:

An electroluminescent (EL) display produces light through the application of an electric field to a polycrystalline phosphor. Readily available EL displays are monochromatic, with a typical color being yellow on a black background; EL displays with limited color capability are also available. EL displays are most commonly used as matrix-addressed graphics displays and backlights for liquid crystal displays; the latter use is not covered by this handbook.

215. WHEN TO USE:

A matrix-addressed EL display should be used for graphics applications where display visibility from multiple viewer positions, high display uniformity, high display resolution, low physical display volume, and low power consumption are more important than the display of high-brightness images, the luminance half-life of the display, or sunlight readability of the display.

216. USE OF GENERAL DISPLAYS GUIDELINES:

The design and use of EL displays should conform to the applicable general guidelines for electronic visual displays that are in chapter 5.

217. MATRIX ANOMALIES:

A matrix-addressed EL display should not display any matrix anomalies that cause distraction or erroneous interpretation. (Based on reference 47.)

Comment: Since the display is an array of discrete elements, symbols will have spatial and color anomalies. These phenomena are different in static and dynamic symbols; matrix anomalies are especially visible in dynamic images. The extent of the anomaly is dependent on many factors, including the size, shape, and arrangement of the elements; construction of the symbol; rate, direction, and increment of motion; and luminance control of the elements.[47]

218. PIXEL SHAPE:

A monochrome matrix-addressed EL display should use square rather than rectangular pixels. (Based on reference 52.)

219. FAILURE RATES FOR PIXELS AND LINES:

A matrix-addressed EL display should have fewer than 1 percent of pixels failed "on," fewer than 2 percent failed pixels total, and no failed lines. (Based on references 53,54.)

Comment: Not all pixels in a matrix-addressed display perform as designed. For monochrome displays, failures are either "on" (matching the symbol luminance) or "off" (matching the background luminance). Failures that are on have a more significant impact on performance measures such as reading time, search speed, and errors than do failures that are off. When all the pixels in a single row or column fail, a failed "line" is said to occur. While failed lines typically have a less significant effect on user performance, they are much more visible and distracting to users. Even a single line failure can often be highly visible.

When individual color elements and lines can fail in a full-color, matrix-addressable display, attention should be given to resulting errors in color perception (e.g., a normally white line could appear yellow if the blue component of the line were to fail).

Head-Up Displays (HUD's)

DEFINITION:

A head-up display (HUD) includes an image source, projection optics, and a combiner. The image is generated on the image source and then projected via collimation optics onto the combiner, where it is viewed as an image overlaid on the forward visual scene. The automotive HUD image source is typically monochromatic, either a vacuum fluorescent display or a stroke-written cathode ray tube. The automotive HUD combiner is typically the forward windshield of the vehicle.

220. WHEN TO USE:

A HUD should be used in either of two circumstances. First, if there is a need to present an electronic image conformal with (precisely overlaid on) the outside scene, HUD's are the most obvious way to address this need. Second, a properly placed and collimated HUD may be used to decrease visual transitions from head-down displays to the outside, forward scene. Information presented on a head-up display should be limited to critical data that the user is required to monitor while simultaneously performing some primary visual task.[13]

221. USE OF GENERAL DISPLAYS GUIDELINES:

The design and use of head-up displays should conform to the applicable general guidelines for electronic visual displays that are in chapter 5.

222. FACTORS TO CONSIDER IN SELECTING AN IMAGE SOURCE:

Selection of a HUD image source for automotive applications should consider output brightness, resolution limitations, packaging considerations, power dissipation, and the recurring costs associated with the display source and the drive electronics. (Based on reference 55.)

Comment: The display technology selected for most of the automotive HUD systems in use today is the vacuum fluorescent display. High brightness CRT's have not been used in automotive HUD's because of the high cost of stroke-writing electronics and because of the low display brightness inherent in raster CRT's. (Based on reference 55.)

223. HEAD MOTION BOX (EYE BOX) SIZE:

A HUD head motion box, or eye box, is a three-dimensional region in space surrounding the eye reference point in which the display can be viewed with at least one eye. This head motion box should be as large as possible to allow maximum head motion without losing the display. The minimum desired size of the head motion box, independent of the optical system technology, is as follows:

a. Width: 11.4 cm (4.5 in).

b. Height: 6.4 cm (2.5 in).

c. Depth: 15.2 cm (6.0 in).[55]

Comment: Head-up displays are typically designed to accommodate a single user from a single design eye reference point. The head motion box would have to be considerably larger to accommodate multiple viewers, which in turn would lead to unrealistic demands on the optical design of the HUD.

224. TRANSMISSION THROUGH THE WINDSHIELD:

If the automobile windshield is modified for use as a HUD combiner, the total transmission through the windshield must not fall below the Federal requirement of 70 percent. (Based on reference 55.)

Comment: To increase the display brightness and improve the contrast ratio, the windshield reflectivity can be increased by introducing a holographic element into the windshield or by adding a wavelength-selective conventional coating to the inner surface of the windshield.[56]

225. IMAGE IMPACT ON NORMAL VEHICLE OPERATION:

If the automobile HUD image is not conformal with (precisely overlaid on) the outside scene, it should be positioned such that it does not interfere with the normal operation of the vehicle. (Based on reference 55.)

226. COMBINING GLASS ASSEMBLY DESIGN:

The combining glass assembly should be designed so that the user will not be injured by contact with the combiner.[51]

Comment: The windshield is typically used as the combiner for automotive HUD applications. If a separate combiner is used, it must be designed and placed with consideration of uncontrolled body movements under positive and negative vehicle accelerations.

227. ANGULAR DISPLACEMENT OF REAL-WORLD OBJECTS:

The combining glass assembly should not cause the angular location of real-world objects, as they appear through the combining glass assembly, to deviate by more than 1.72 arcmin. (Based on reference 51.) **This translates to:**

displacement = viewing distance/1998.69, where displacement and viewing distance are in centimeters.

Example: At a viewing distance of 10 m (32.8 ft), the allowed displacement is 1000 cm/1998.69 = .5 cm (.2 in).

228. SALIENCE OF VISIBLE EDGES AROUND THE COMBINER:

Efforts should be made to minimize the salience of visible edges around a HUD combiner. (When the combiner is the windshield, this is not an issue. When the combiner is some other glass, it may be supported by some type of framework, and the edges of the framework are to be made as nearly invisible as possible.)[38]

Comment: Any kind of salient visual detail attracts convergence (and accommodation). Placing the HUD image adjacent to, e.g., a

window post, may interfere with a driver's ability to visually accommodate to the image at the intended image distance.[38]

229. CHARACTER HEIGHTS:

The minimum heights for HUD alphanumeric and nonalphanumeric characters that need to be identified or distinguished from other characters are shown in table 26. The recommendation does not apply to pointers, scale markings, and the like. (Based on reference 38.)

Table 26. Minimum character sizes for head-up displays.

	For Alphanumeric Characters	For Nonalphanumeric Characters
Minimum size on the retina, arcmin	28	34
Minimum height, centimeters[a]	Focal distance/122.78, where focal distance is in centimeters[b]	Focal distance/101.11, where focal distance is in centimeters[b]

[a] The formula for determining character height (h) upon which the table is based is as follows:

$$h = 2\left(\tan\left(\frac{\text{character size on the retina}}{2}\right)\right)(\text{focal distance}),$$ where h and focal distance are in centimeters, and character size on the retina is in degrees.[41]

Retinal character size is used because it is independent of focal distance. Thus, one can tell whether a character that subtends 30 arcmin (its retinal size) can be read without knowing the focal distance, but one could not tell whether a 0.3-cm- (0.12-in-) high character could be read without knowing the focal distance.

Example of determining character height (in centimeters) using the formula shown in the table: For alphanumeric characters, what is the minimum character height needed at a focal distance of 101.6 cm (40 in)? Character height = 101.6/122.78 = 0.83 cm (0.33 in).

[b] In a collimated system, focal distance is the distance at which the image appears to be. It is analogous to viewing distance when looking at a real-world object.

230. RASTER LINES PER SYMBOL HEIGHT:

In head-up raster displays, a 16-lines-per-symbol-height minimum should be used for labels and alphanumeric characters. For nonalphanumeric characters and all moving symbols, a 20-lines-per-symbol-height minimum should be used.[38]

231. STROKE WIDTH TO SYMBOL HEIGHT RATIO:

The minimum stroke width to symbol height ratio for a stroke-written HUD is between 1:5 and 1:8. (Based on reference 38.)

232. SYMBOL WIDTH:

The minimum HUD symbol width should be 75 percent of the symbol height.[38]

233. BETWEEN-CHARACTERS SPACING:

The minimum HUD between-characters spacing should be 50 percent of character height for grouped letters.[38]

234. BETWEEN-WORDS SPACING:

The minimum HUD between-words spacing should be 100 percent of character height.[38]

235. CHARACTER MATRIX SIZE:

The minimum HUD character matrix size is 7 by 9 (width by height). The preferred HUD character matrix size is 9 by 11.[38]

236. USE OF COLOR:

Color should not be used for HUD symbology. A monochromatic HUD with a narrow-band phosphor is preferred (P-43 phosphor is often chosen).[38]

Comment: Although color coding has been shown to be advantageous over shape coding in conventional display use, this advantage has not been demonstrated for HUD's. The continually changing background makes the perception of color more difficult, and chromatic (colored) symbols will be harder to discriminate (lack of chromatic contrast with the background) and will serve as a poor coding scheme (lack of color constancy) under certain environmental circumstances. Reference 54 failed to find a performance advantage for including color in HUD's. Perhaps more significantly, image source technology constraints limit the luminance of color displays and therefore make them less attractive for HUD applications.

237. SYMBOL LUMINANCE:

For daytime use, HUD symbol luminance for automotive applications should be a minimum of 3000 cd/m^2 (876 fl). It should be significantly lower for nighttime use. (Based on reference 56.)

Comment: It is assumed that this requirement should be interpreted as a minimum luminance at the eye rather than at the display. Higher HUD symbol luminances may be required to meet HUD contrast requirements.

238. IMAGE (FOCUS) DISTANCE:

The image (focus) distance of the HUD should not be infinity, but rather the approximate distance of the bumper of the vehicle. (Based on reference 55.)

Comment: This is a compromise distance designed to eliminate driver confusion potentially originating from having a display distance greater than real-world obstacles (e.g., traffic). Drivers are already experienced at focusing from outside of the vehicle to inside to view conventional dashboard displays. Therefore, "focusing in" slightly to see the HUD display is a practical and natural action. A display image at the distance of the front bumper minimizes the focus change, yet still keeps the driver's attention outside. An image distance closer than 2.5 m (8.2 ft) may, however, lead to response time penalties for older drivers.[56]

239. VERGENCE ANGLE:

The vergence angle for a head-up display should be between 0.0° and 0.14°.[57] (Vergence angle is the angle between the lines of sight of the two eyes. For collimating displays such as HUD's, it is used to specify apparent image distance.)

Comment: Divergent viewing (vergence angles less than 0.0°) will lead to viewing discomfort and possibly double vision. A vergence angle of 0.0° corresponds to a HUD image distance of infinity. Vergence angle is given by:

$$\text{vergence angle} = 2 \arctan\left(0.5\left[\frac{\text{interocular separation}}{\text{focus distance}}\right]\right), \text{ where}$$

vergence angle is in degrees, and interocular separation and focus distance are in millimeters.

Example: For an interocular separation of 6.4 mm (0.25 in) and a focus distance of 2.6 m (8.5 ft), what is the vergence angle? First, convert the focus distance to millimeters: 2.6 m = 2600 mm. Then, vergence angle = 2 arctan (0.5 [6.4/2600]) = 0.14°.

240. FIELD OF VIEW:

An automotive HUD should have the following minimum fields of view with respect to the user's eye position:

a. **6° above the horizontal.**

b. **5° below the horizontal.**

c. **12° to the left of straight ahead.**

d. **11° to the right of straight ahead.** (Based on reference 56.)

Indicator Lights (Simple)

241. WHEN TO USE:

Indicator lights should be used to indicate system, equipment, and/or control condition. They should be used to display qualitative information when an immediate reaction by the user is needed, or to draw attention to an important system status.[14]

Comment: This guideline also applies to simple indicator lights represented on the following electronic displays that are included in this handbook:

- Cathode ray tube.
- Electroluminescent.
- Head-up display.
- Light-emitting diode: matrix addressed.
- Liquid crystal display: transflective, matrix addressed; and transmissive, matrix addressed.
- Vacuum fluorescent display: matrix addressed.

242. USE OF A LIGHT-EMITTING DIODE (LED) AND GENERAL DISPLAYS GUIDELINES:

The design and use of LED's as simple indicator lights should conform to the applicable general guidelines for electronic visual displays that are in chapter 5.

243. STATE INDICATIONS:

Generally, an indicator light should be used to indicate equipment state rather than to control position or condition. In addition:

a. **Equipment state should always be continually displayed.**

b. **Control actuation should be transiently displayed.**

c. **Control setting should be continuously displayed if it can be at variance with equipment state. An in-transit condition should remain ON until the system state is consistent with the control state (except for in-transit durations shorter than the user's response time).**[14]

Comment: This guideline also applies to simple indicator lights represented on the following electronic displays that are included in this handbook:

- Cathode ray tube.
- Electroluminescent.
- Head-up display.

- Light-emitting diode: matrix addressed.
- Liquid crystal display: transflective, matrix addressed; and transmissive, matrix addressed.
- Vacuum fluorescent display: matrix addressed.

244. USE UNDER VARIED AMBIENT ILLUMINATION:

When an indicator light is used under varied ambient illumination, a dimming control should be provided. It should be capable of providing multiple step or continuously variable illumination. Dimming to full OFF may be provided in noncritical operations, but not if inadvertent failure to turn on an indicator could lead to a critical user failure, i.e., failure to detect or perform a critical step in an operation.[13]

Comment: This guideline also applies to simple indicator lights represented on the following electronic displays that are included in this handbook:

- Cathode ray tube.
- Electroluminescent.
- Head-up display.
- Light-emitting diode: matrix addressed.
- Liquid crystal display: transflective, matrix addressed; and transmissive, matrix addressed.
- Vacuum fluorescent display: matrix addressed.

245. BETWEEN-LIGHTS SPACING:

The spacing between adjacent edges of simple, round indicator light fixtures should be sufficient to permit unambiguous labeling and signal interpretation, and convenient bulb replacement.[13]

Comment: This guideline also applies to simple indicator lights represented on the following electronic displays that are included in this handbook:

- Cathode ray tube.
- Electroluminescent.
- Head-up display.
- Light-emitting diode: matrix addressed.
- Liquid crystal display: transflective, matrix addressed; and transmissive, matrix addressed.
- Vacuum fluorescent display: matrix addressed.

246. LABELING LOCATION:

Indicator labeling should be provided close to the indicator, imparting the message intended by the light's illumination.[49]

Comment: This guideline also applies to simple indicator lights represented on the following electronic displays that are included in this handbook:

- Cathode ray tube.
- Electroluminescent.
- Head-up display.
- Light-emitting diode: matrix addressed.
- Liquid crystal display: transflective, matrix addressed; and transmissive, matrix addressed.
- Vacuum fluorescent display: matrix addressed.

247. MEANING OF CHANGES IN LIGHT STATUS:

Changes in indicator light status should signify changes in functional status rather than the results of control actuation alone.[13]

Comment: This guideline also applies to simple indicator lights represented on the following electronic displays that are included in this handbook:

- Cathode ray tube.
- Electroluminescent.
- Head-up display.
- Light-emitting diode: matrix addressed.
- Liquid crystal display: transflective, matrix addressed; and transmissive, matrix addressed.
- Vacuum fluorescent display: matrix addressed.

248. MEANING OF ABSENCE OR EXTINGUISHMENT OF A LIGHT:

The absence or extinguishment of an indicator light should not be used to denote a malfunction, no go, or out-of-tolerance condition; however, the absence of a power-ON signal should be acceptable to indicate a power-OFF condition for operational displays only (i.e., not for maintenance displays). The absence or extinguishment of an indicator light should not be used to indicate a ready or in-tolerance condition, unless the status- or caution-light filament and its associated circuitry can be easily tested by the user and user perception of such events is not time critical.[13]

Comment: This guideline also applies to simple indicator lights represented on the following electronic displays that are included in this handbook:

- Cathode ray tube.
- Electroluminescent.
- Head-up display.
- Light-emitting diode: matrix addressed.
- Liquid crystal display: transflective, matrix addressed; and transmissive, matrix addressed.
- Vacuum fluorescent display: matrix addressed.

249. INFERRING SYSTEM OR EQUIPMENT STATUS:
System or equipment status should be inferred from the illumination of an indicator light, not by the absence of its illumination.[49]

Comment: This guideline also applies to simple indicator lights represented on the following electronic displays that are included in this handbook:

- Cathode ray tube.
- Electroluminescent.
- Head-up display.
- Light-emitting diode: matrix addressed.
- Liquid crystal display: transflective, matrix addressed; and transmissive, matrix addressed.
- Vacuum fluorescent display: matrix addressed.

250. LOCATION OF AN INDICATOR ASSOCIATED WITH A CONTROL:
When an indicator is associated with a control, the indicator light should be so located as to be immediately and unambiguously associated with the control and visible to the user during control operation.[14]

Comment: This guideline also applies to simple indicator lights represented on the following electronic displays that are included in this handbook:

- Cathode ray tube.
- Electroluminescent.
- Head-up display.
- Light-emitting diode: matrix addressed.
- Liquid crystal display: transflective, matrix addressed; and transmissive, matrix addressed.
- Vacuum fluorescent display: matrix addressed.

251. LOCATION OF A CRITICAL FUNCTION INDICATOR:

A critical function indicator (safety-related master warning light) should be located horizontally within ±15° of a line of sight straight ahead and vertically between the horizontal line of sight and 30° below it, except as indicated in guideline 250.[14]

Comment: This guideline also applies to simple indicator lights represented on the following electronic displays that are included in this handbook:

- Cathode ray tube.
- Electroluminescent.
- Head-up display.
- Light-emitting diode: matrix addressed.
- Liquid crystal display: transflective, matrix addressed; and transmissive, matrix addressed.
- Vacuum fluorescent display: matrix addressed.

252. USE OF AN LED:

An LED may be used as a simple indicator light only if it is bright enough to be readable in the intended environment.[13]

253. LAMP REMOVAL AND REPLACEMENT:

Where possible, lamps should be removable and replaceable from the front of the display panel. The procedure for lamp removal and replacement should not require the use of tools and should be easily and rapidly accomplished.[13]

254. INDICATORS ON A CONTROL PANEL:

When indicator lights using incandescent bulbs are installed on a control panel, a master lamp-test control should be incorporated. When applicable, the design should allow testing of all control panels at one time. Panels containing three or fewer lights may be designed for individual press-to-test lamp testing. Circuitry should be designed to test the operation of the total indicator circuit. An LED indicator light with less than 100,000 h mean time between failures should require a lamp testing capability.[13,49]

255. PREVENTION OF INDICATOR LENS INTERCHANGING:

Provisions (design or procedural) should be made to prevent interchanging indicator lenses.[48]

256. LUMINANCE:

Luminance of the illuminated indicator should be at least 10 percent greater than that of the immediate mounting surface. Where glare should be reduced, the luminance should not exceed 300 percent of the surrounding luminance.[14]

Comment: This guideline also applies to simple indicator lights represented on the following electronic displays that are included in this handbook:

- Cathode ray tube.
- Electroluminescent.
- Head-up display.
- Light-emitting diode: matrix addressed.
- Liquid crystal display: transflective, matrix addressed; and transmissive, matrix addressed.
- Vacuum fluorescent display: matrix addressed.

257. BRIGHTNESS OF A WARNING OR CAUTION SIGNAL:

When used as a warning or caution signal, an indicator light should be at least three times brighter than the other indicators on the panel.[49]

Comment: This guideline also applies to simple indicator lights represented on the following electronic displays that are included in this handbook:

- Cathode ray tube.
- Electroluminescent.
- Head-up display.
- Light-emitting diode: matrix addressed.
- Liquid crystal display: transflective, matrix addressed; and transmissive, matrix addressed.
- Vacuum fluorescent display: matrix addressed.

258. FALSE INDICATIONS:

An indicator light should not appear to be illuminated when in fact it is off, or vice versa.[48]

259. INCANDESCENT LAMP COLOR CONVENTIONS:

Color of an incandescent lamp indicator light may be provided by a tinted cover glass or by a layer of colored material inside the cover. The color of the light should be clearly identifiable, and should conform to the following scheme:

a. **Red should be used to indicate an alarm condition, alerting the user that the system or a portion of the system is inoperative.**

b. **Flashing red should be used to indicate an emergency condition that requires immediate user action.**

c. **Yellow should be used to indicate a caution condition, advising the user that a condition exists that is marginal.**

d. **Green should be used to indicate a normal, in-tolerance condition.**

e. **White should be used as a neutral color, indicating a system condition that does not have right or wrong implications (e.g., alternative functions).**

f. **Blue may be used as an advisory color.** (Based on references 14, 43,48,49.)

Comment: The part of the guideline stating that the color of the light should be clearly identifiable and the color scheme in parts a through f of the guideline also apply to simple indicator lights represented on the following electronic displays that are included in this handbook:

- Cathode ray tube.
- Electroluminescent.
- Head-up display.
- Light-emitting diode: matrix addressed.
- Liquid crystal display: transflective, matrix addressed; and transmissive, matrix addressed.
- Vacuum fluorescent display: matrix addressed.

260. LIGHT-EMITTING DIODE COLOR CONVENTIONS:

Color coding for an LED used as an indicator light should conform to guideline 259. Note: Red LED's used in a matrix-addressed display should not be located in the proximity of indicator lights that are coded red.(13)

261. SIZE CODING:

Size coding of indicator lights should conform to the specifications in table 27.(14)

Comment: This guideline also applies to simple indicator lights represented on the following electronic displays that are included in this handbook:

- Cathode ray tube.
- Electroluminescent.
- Head-up display.

- Light-emitting diode: matrix addressed.
- Liquid crystal display: transflective, matrix addressed; and transmissive, matrix addressed.
- Vacuum fluorescent display: matrix addressed.

Table 27. Size coding of indicator lights.[1]

Diameter and Type	Red	Yellow	Green	White
≤13 mm (.5 in) Steady Light	Malfunction, action stopped, failure, stop action	Delay, check, recheck	Go ahead, in tolerance, acceptable, ready	Functional or physical position, action in progress
≥25 mm (1 in) Steady Light	Master summation	Extreme caution (impending danger)	Master summation	–
≥25 mm (1 in) Flashing Light	Emergency condition (impending personnel or equipment disaster)	–	–	–

[1] Actual sizes may be less important than relative sizes, given at least equal luminances. (Based on reference 13.)

262. FLASHING:

The use of flashing lights should be minimized. Flashing lights should be used only when it is necessary to call the user's attention to some condition requiring immediate action. The flash rate should be 3 to 5 Hz with approximately equal on and off times (i.e., a 50 percent duty cycle). Flashing lights which could be simultaneously active should have synchronized flashes. If the indicator is energized and the flasher device fails, the light should illuminate and burn steadily.(14)

Comment: This guideline also applies to simple indicator lights represented on the following electronic displays that are included in this handbook:

- Cathode ray tube.
- Electroluminescent.
- Head-up display.
- Light-emitting diode: matrix addressed.
- Liquid crystal display: transflective, matrix addressed; and transmissive, matrix addressed.
- Vacuum fluorescent display: matrix addressed.

Light-Emitting Diode (LED) Displays

DEFINITION:

An LED produces light through electron injection in a solid state semiconductor. LED's are available in red, yellow, green, and blue, and graphics displays have been produced for avionic applications that incorporate large matrices of LED's. Common uses of LED's include:

a. **Indicator lights.**

b. **Matrix-addressed graphics displays.**

c. **Segmented character displays (not addressed in this handbook).**

263. WHEN TO USE:

Matrix-addressed LED's should be used for graphics applications when display visibility from multiple viewer positions, low physical display volume, and high display mean time between failures are more important than high resolution, high brightness, low power consumption, and sunlight visibility.

264. USE OF GENERAL DISPLAYS GUIDELINES:

The design and use of LED displays should conform to the applicable general guidelines for electronic visual displays that are in chapter 5.

265. MATRIX ANOMALIES:

Matrix-addressed LED's should not display any matrix anomalies that can cause distraction or erroneous interpretation. (Based on reference 45.)

Comment: Since the display is an array of discrete elements, symbols will have spatial and color anomalies. These phenomena are different in static and dynamic symbols; matrix anomalies are especially visible in dynamic images. The extent of the anomaly is dependent on many factors, including the size, shape, and arrangement of the elements; construction of the symbol; rate, direction, and increment of motion; and luminance control of the elements.[47]

266. PIXEL SHAPE:

Monochrome matrix-addressed LED's should use square rather than rectangular pixels. (Based on reference 52.)

267. FAILURE RATES FOR PIXELS AND LINES:

Matrix-addressed LED's should have fewer than 1 percent of pixels failed "on," fewer than 2 percent failed pixels total, and no failed lines. (Based on references 45,53.)

Comment: Not all pixels in a matrix-addressed display perform as designed. For monochrome displays, failures are either "on" (matching the symbol luminance) or "off" (matching the background luminance). Failures that are on have a more significant impact on performance measures such as reading time, search speed, and errors than do failures that are off. When all the pixels in a single row or column fail, a failed "line" is said to occur. While failed lines typically have a less significant effect on user performance, they are much more visible and distracting to users. Even a single line failure can often be highly visible.

When individual color elements and lines can fail in a full-color, matrix-addressable display, attention should be given to resulting errors in color perception (e.g., a normally white line could appear yellow if the blue component of the line were to fail).

Liquid Crystal Displays (LCD's)

DEFINITION:

Unlike the other electronic displays addressed in this handbook, a liquid crystal does not produce light, but rather acts as a light valve. The alignment of liquid crystal molecules is altered by applying an electric field. Their alignment is used to control the polarization of light passing through the liquid crystal material, either blocking the light or allowing the light to pass through. Liquid crystal displays are generally transmissive (backlighted), reflective (relying only on ambient light), or transflective (a combination of transmissive and reflective). Typical LCD backlights include fluorescent, electroluminescent (EL), light-emitting diode, and incandescent lamp. For transmissive LCD's, cold cathode fluorescent lamps generally provide the best maximum luminance and luminance half-life, while EL backlights provide the best luminance uniformity and thickness. Liquid crystal displays may present either dark images on light backgrounds or light images on dark backgrounds. Monochrome LCD's are available with a variety of colored backgrounds and colored backlights. Full color LCD's are available in larger graphics displays, but generally are not available in character displays. A wide variety of display addressing techniques has been devised for LCD's. The most satisfactory off-axis contrast is obtained with thin-film-transistor active-matrix LCD's. The LCD's addressed in this handbook are:

a. **Transflective, segmented-character displays.**

b. **Transflective, matrix-addressed displays.**

c. **Transmissive, matrix-addressed displays.**

268. WHEN TO USE:

A transflective LCD should be used where sunlight visibility, low power consumption, and display visibility from multiple viewer positions are more important than a multicolor, high resolution display. A transmissive LCD should be used where display brightness, display resolution, and multicolor display are more important than sunlight visibility, low power consumption, and display visibility from multiple viewer positions. Seven-segment displays should be used only for applications requiring numeric information.[13]

Comment: Seven-segment displays are assumed to have insufficient addressability to adequately display an alphabetic character set.

269. USE OF GENERAL DISPLAYS GUIDELINES:

The design and use of LCD's should conform to the applicable general guidelines for electronic visual displays that are in chapter 5.

270. COLOR DISCRIMINABILITY:

Colors, especially red, amber, and yellow, should remain discriminable at all angles from which the LCD is likely to be viewed. (Based on reference 47.)

Comment: Color shifts and even color reversals are commonly seen in LCD's at viewing angles deviating from perpendicular to the display surface.

271. DAYTIME USE OF TRANSFLECTIVE, SEGMENTED LCD's:

For daytime use, a transflective, segmented LCD should be backlighted. The minimum reflectance of the "on" or active segment areas of these displays should be 25 percent. (Based on reference 47.)

Comment: Such displays should also be backlighted for nighttime use, although at a lower luminance.[41]

272. LUMINANCE OF TRANSMISSIVE LCD's:

A transmissive LCD should be capable of displaying white symbol lines at a luminance of at least 168 cd/m^2 (49 fl). (Based on reference 47.)

Comment: The measurement of symbol line luminance requires the use of proper instrumentation and measurement technique. In

particular, it is important that the background area does not occupy a large portion of the measurement field.

273. MATRIX ANOMALIES:

A matrix-addressed LCD should not display any matrix anomalies that can cause distraction or erroneous interpretation. (Based on reference 47.)

Comment: Since the display is an array of discrete elements, symbols will have spatial and color anomalies. These phenomena are different in static and dynamic symbols; matrix anomalies are especially visible in dynamic images. The extent of the anomaly is dependent on many factors, including the size, shape, and arrangement of the elements; construction of the symbol; rate, direction, and increment of motion; and luminance control of the elements.[47]

274. PIXEL SHAPE:

A monochrome matrix-addressed LCD should use square rather than rectangular pixels. (Based on reference 52.)

275. FAILURE RATES FOR PIXELS AND LINES:

A matrix-addressed LCD should have fewer than 1 percent of pixels failed "on," fewer than 2 percent failed pixels total, and no failed lines. (Based on references 45,53.)

Comment: Not all pixels in a matrix-addressed display perform as designed. For monochrome displays, failures are either "on" (matching the symbol luminance) or "off" (matching the background luminance). Failures that are on have a more significant impact on performance measures such as reading time, search speed, and errors than do failures that are off. When all the pixels in a single row or column fail, a failed "line" is said to occur. While failed lines typically have a less significant effect on user performance, they are much more visible and distracting to users. Even a single line failure can often be highly visible.

When individual color elements and lines can fail in a full-color, matrix-addressable display, attention should be given to resulting errors in color perception (e.g., a normally white line could appear yellow if the blue component of the line were to fail).

Plasma (Gas Discharge) Displays

DEFINITION:

A plasma (gas discharge) display produces a cathode glow by electrical excitation of small pockets of gas. Both direct current- and alternating current (ac)-power plasma displays are available. The plasma display color is typically orange on a black background. Color ac plasma displays have been demonstrated, but are not yet commercially available. Display filters may be used to change the color of monochrome displays, but at the expense of lowering the display luminance. Common plasma display applications include:

a. **Matrix-addressed graphics displays.**

b. **Segmented character displays (not addressed in this handbook).**

276. WHEN TO USE:

A matrix-addressed plasma display should be used for graphics applications when display visibility from multiple viewer positions, low physical display volume, low power consumption, and high display mean time between failures are more important than high resolution, high brightness, the display of multicolored objects, and sunlight visibility.

277. USE OF GENERAL DISPLAYS GUIDELINES:

The design and use of plasma displays should conform to the applicable general guidelines for electronic visual displays that are in chapter 5.

278. MATRIX ANOMALIES:

A matrix-addressed plasma display should not display any matrix anomalies that can cause distraction or erroneous interpretation. (Based on reference 47.)

Comment: Since the display is an array of discrete elements, symbols will have spatial and color anomalies. These phenomena are different in static and dynamic symbols; matrix anomalies are especially visible in dynamic images. The extent of the anomaly is dependent on many factors, including the size, shape, and arrangement of the elements; construction of the symbol; rate, direction, and increment of motion; and luminance control of the elements.[47]

279. PIXEL SHAPE:

A monochrome matrix-addressed plasma display should use square rather than rectangular pixels. (Based on reference 52.)

280. FAILURE RATES FOR PIXELS AND LINES:

A matrix-addressed plasma display should have fewer than 1 percent of pixels failed "on," fewer than 2 percent failed pixels total, and no failed lines. (Based on references 45,53.)

Comment: Not all pixels in a matrix-addressed display perform as designed. For monochrome displays, failures are either "on" (matching the symbol luminance) or "off" (matching the background luminance). Failures that are on have a more significant impact on performance measures such as reading time, search speed, and errors than do failures that are off. When all the pixels in a single row or column fail, a failed "line" is said to occur. While failed lines typically have a less significant effect on user performance, they are much more visible and distracting to users. Even a single line failure can often be highly visible.

When individual color elements and lines can fail in a full-color, matrix-addressable display, attention should be given to resulting errors in color perception (e.g., a normally white line could appear yellow if the blue component of the line were to fail).

Vacuum Fluorescent Displays (VFD's)

DEFINITION:

A vacuum fluorescent display (VFD) produces light through electron bombardment of phosphor in a vacuum under the control of a grid. So-called "front-luminous" VFD's are available that may provide better display visibility (luminance and contrast) than conventional VFD's. The VFD color is typically blue-green on a black background, but filters are often used to produce other colors such as green, yellow, and red. Full-color VFD's have been demonstrated, but at resolutions and luminance levels too low to be of practical value in a road vehicle. Even monochrome graphics VFD's are of limited resolution. VFD's are most commonly used as:

a. Segmented character displays.

b. Matrix-addressed graphics displays.

281. WHEN TO USE:

A VFD should be used for character display and graphics applications when display visibility from multiple viewer positions, high display brightness, low physical display volume, and high display mean time between failures are more important than the display of high resolution, multicolored objects. Seven-segment displays should be used only for applications requiring numeric information.[13]

Comment: Seven-segment displays are assumed to have insufficient addressability to adequately display an alphabetic character set.

282. USE OF GENERAL DISPLAYS GUIDELINES:

The design and use of VFD's should conform to the applicable general guidelines for electronic visual displays that are in chapter 5.

283. MATRIX ANOMALIES:

A matrix-addressed VFD should not display any matrix anomalies that can cause distraction or erroneous interpretation. (Based on reference 47.)

Comment: Since the display is an array of discrete elements, symbols will have spatial and color anomalies. These phenomena are different in static and dynamic symbols; matrix anomalies are especially visible in dynamic images. The extent of the anomaly is dependent on many factors, including the size, shape, and arrangement of the elements; construction of the symbol; rate, direction, and increment of motion; and luminance control of the elements.[47]

284. PIXEL SHAPE:

A monochrome matrix-addressed VFD should use square rather than rectangular pixels. (Based on reference 52.)

285. FAILURE RATES FOR PIXELS AND LINES:

A matrix-addressed VFD should have fewer than 1 percent of pixels failed "on," fewer than 2 percent failed pixels total, and no failed lines. (Based on references 45,53.)

Comment: Not all pixels in a matrix-addressed display perform as designed. For monochrome displays, failures are either "on" (matching the symbol luminance) or "off" (matching the background luminance). Failures that are on have a more significant impact on performance measures such as reading time, search speed, and errors than do failures that are off. When all the pixels in a single row or column fail, a failed "line" is said to occur. While failed lines typically have a less significant effect on user performance, they are much more visible and distracting to users. Even a single line failure can often be highly visible.

When individual color elements and lines can fail in a full-color, matrix-addressable display, attention should be given to resulting errors in color perception (e.g., a normally white

line could appear yellow if the blue component of the line were to fail).

Nonspeech Auditory Displays

DEFINITIONS:

The following definitions are used in the guidelines for nonspeech auditory displays:

a. **An alerting signal is used when there is a requirement for an immediate response to a situation outside the user's normal task sequence, when some system function needs attention on an irregular basis, or when there is a minor component failure.**

b. **A caution signal is used to capture the attention of the user so as to direct him/her to a potentially destructive condition requiring immediate awareness. There is no immediate threat to life or major property damage, but there may be incipient threat to either, or there may be a possible threat of a major system malfunction or abort. A caution signal may be either a single-element or a two-element signal (see item d in this guideline).**

c. **A warning signal is used to alert the user in hazardous or emergency situations that immediate action is required. A warning signal may be either a single-element or a two-element signal (see item d in this guideline).**

d. **A single-element signal consists of an alert only; it indicates that there is a problem but not exactly what it is. A two-element signal consists of an alert followed by an identifying (or action) signal, the latter indicating the specific nature of the problem.**[14]

286. WHEN TO USE:

Use nonspeech auditory displays under the following conditions:

a. **The information that is to be processed is short, simple, and transitory, requiring an immediate or time-based response.**

b. **The visual display is restricted by:**
   - **Overburdening.**
   - **Ambient light variability or limitation.**
   - **User mobility.**
   - **Degradation of vision (e.g., due to vibration).**
   - **Other environmental considerations.**
   - **Anticipated user inattention.**

c. **It is desirable to capture the user's attention.**

d. **Custom or usage has created the anticipation of an auditory display.**

e. **An auditory presentation is desirable to reinforce a visual presentation.**[14]

287. WHEN TO USE A NONSPEECH AUDITORY DISPLAY VS. A SPEECH DISPLAY:

A nonspeech auditory display should be used rather than a speech display under the following circumstances:

a. **When listeners are trained to understand coded signals.**

b. **For designating a point in time that has no absolute value.**

c. **When immediate action is desired.**

d. **In conditions unfavorable for receiving speech messages.**

e. **If speech will mask other speech signals or annoy listeners for whom the message is not intended.**[25]

288. STRENGTHS AND WEAKNESSES:

Nonspeech auditory displays are either simple tones or complex sounds. Their strengths and weaknesses with respect to use for various functions are presented in table 28.[14]

Table 28. Strengths and weaknesses of nonspeech auditory displays.

Function	Simple Tones	Complex Sounds
Quantitative Indication	**Poor**: A maximum of five to six tones are absolutely recognizable.	**Poor**: Interpolation between signals is inaccurate.
Qualitative Indication	**Poor to Fair**: It is difficult to judge the approximate value and direction of deviation from a null setting unless the tones are presented in a close temporal sequence.	**Poor**: It is difficult to judge the approximate deviation from the desired value.
Status Indication	**Good**: Start and stop timing can be used. Continuous information can be provided when the rate of change of the input is low.	**Good**: Especially suitable for irregularly occurring signals (e.g., alarms).
General	• Good for the automatic communication of limited information. • Their meanings must be learned. • They are easily generated.	• Some sounds are available that have a common meaning (e.g., a fire bell). • They are easily generated.

289. OPERABILITY TEST:

Nonspeech auditory displays should be equipped with circuitry test devices or other means of testing operability.[14]

290. CODING PRINCIPLES:

If nonspeech auditory displays are to be coded (e.g., to prioritize signals), the following principles should be employed:

a. **Coding methods should be distinct and unambiguous, and should not conflict with other auditory signals.**
b. **Pulse coding by repetition rate may be used, but the number of codes should be limited to two or three. Repetition rates should be sufficiently separated to ensure user discrimination.**
c. **If modulation of signal frequency denotes information, center frequencies should be between 500 and 1,000 Hz.**
d. **If discrete frequency codes are used, frequencies should be broad band (±100 Hz) and widely spaced within the 200 to 5,000 Hz range. No more than five separate frequencies should be used.**
e. **Coding by intensity is not recommended.[48]**

291. USE OF UNIQUE CODES:

Once a particular nonspeech auditory display code is established for a given operating situation, the same code should not be designated for some other display.[10]

292. WHEN A FAILURE CAN RESULT IN SUSTAINED ACTUATION OF THE DISPLAY:

An interlocked, manual-disable control should be provided if there is any failure mode that can result in the sustained actuation of a non-speech auditory display.[49]

293. TRANSMISSION SYSTEM:

Systems used to transmit nonspeech auditory signals should be used for only that purpose.[48]

294. DIRECTION OF SOUND:

Sound sources (e.g., speakers) should direct sound toward the center of the primary operating area.[48]

295. WHEN THE SIGNAL IS TO BE QUANTIFIABLE:

When the tonal signal information is to be quantifiable, provide a reference tone (e.g., a baseline loudness or pitch) against which the primary signal can be compared.[10]

296. TIME TO CONTAIN ESSENTIAL INFORMATION IN A SINGLE-ELEMENT SIGNAL:

A single-element signal should contain all essential information in the first 0.5 s.[10]

297. FREQUENCY RANGE:

The frequency range for nonspeech auditory displays should be between 200 and 5,000 Hz, with a preferred range of 500 to 3,000 Hz.[14]

298. PROMINENT FREQUENCY COMPONENTS AND HARMONICS:

The prominent frequency components for nonspeech auditory displays should be in the range from 1,000 to 4,000 Hz. At least 4 of the first 10 harmonics should be present.[58]

299. INTENSITY:

Nonspeech auditory displays should be presented at ≥20 dB(A) above the background noise level. Their intensity should not be greater than 90 dB(A).[14,58]

300. ONSET RATE:

The onset rate for nonspeech auditory displays should be less than 1 dB/ms.[58]

301. WHEN USING MULTIPLE FREQUENCIES:

When using multiple frequencies, simple multiples of other frequencies should be avoided.[25]

302. ATTENTION-DEMANDING SIGNAL:

An intermittent (1 to 8 beeps/s) or frequency-modulated signal should be used to demand attention.[25]

303. SIGNAL BURST DURATION:

The minimum duration signal burst should be at least 100 ms.[58]

304. SIGNAL TYPES TO AVOID:

The types of signals listed below should not be used where possible confusion might exist because of the operational environment:

a. **Steady signals that resemble hisses, static, or sporadic radio signals.**
b. **Trains of impulses that resemble electrical interference, whether regularly or irregularly spaced in time.**

c. **Signals similar to random noise generated by air conditioning or any other equipment.**

d. **Signals that resemble sounds likely to occur accidentally under operational conditions.**[14]

305. FALSE ALARMS:

Alerts, cautions, and warnings should be designed so that false alarms are avoided.[48]

306. VOLUME CONTROL:

The volume (loudness) of an alerting, caution, or warning signal should be designed to be controlled by the user, the sensing mechanism, or both, depending on the operational situation and personnel safety factors. User control actions should not be allowed to reduce the volume to an inaudible level. Full volume should be automatically restored upon initiation of the subsequent signal. (Based on references 13,14.)

307. DISCRIMINABILITY AMONG SIGNALS:

When several different nonspeech auditory displays are to be used to alert the user to different types of conditions, either beats and harmonics should be used or there should be a discriminable difference in intensity or pitch. If absolute discrimination is required, the number of signals to be identified should not exceed four.[49]

308. WHEN AN ALERTING SIGNAL CONSISTS OF A GLISSANDO:

When an alerting signal consists of a glissando (a series of notes forming a nearly unbroken change of pitch), the audible signal should remain at least 100 ms in each octave band from the lowest to the highest frequency.[10]

309. ALERTING SIGNAL REPETITION, PERSISTENCE, AND RESET:

An alerting signal may be momentary or continuous in nature, as appropriate:

a. **If it is momentary, it should be repeated periodically until either proper action is taken or the signal is turned off.**

b. **If it is continuous, it should persist until initiation of proper action or signal turn off.**

In either case, after the signal is terminated it should be automatically reset to respond to the next initiating condition.[14]

310. WHEN THE TOTAL NUMBER OF CAUTION SIGNALS IS SMALL:

When the total number of caution signals is small, a two-element caution signal should be used.[14]

311. WHEN USING A SINGLE-ELEMENT CAUTION SIGNAL:
A single-element caution signal should be accompanied by a visually presented message that identifies the specific nature of the caution situation.[14]

312. CAUTION SIGNAL PERSISTENCE AND RESET:
A caution signal should persist intermittently until restoration of normal conditions or manual shut off. Upon termination, it should be automatically reset to respond to the next initiating condition.[14]

313. WHEN THE TOTAL NUMBER OF WARNING SIGNALS IS SMALL:
When the total number of warning signals is small, a single element warning signal should be used.[14]

314. USE OF A SINGLE-ELEMENT WARNING SIGNAL:
A single-element warning signal should be accompanied by a visual annunciation that defines the condition.[13]

315. TIME TO CONTAIN INFORMATION IN A TWO-ELEMENT WARNING SIGNAL:
A two-element warning signal should convey the full meaning of the signal within 2.5 s of initiation.[14]

316. AUTOMATICALLY INITIATED WARNING SIGNAL PERSISTENCE AND RESET:
An automatically initiated warning signal should persist until either automatically or manually terminated. Completion of a corrective action by the user or by other means should automatically terminate the signal. Provision for manual termination should also be provided. Automatic reset for the next initiating condition should be provided.[14]

317. SIMULTANEOUS WARNING SIGNALS:
No warning signal should preclude hearing any other warning signal.[14]

318. WARNING SIGNAL POWER SOURCE:
A warning signal should be provided with a separate, emergency power source.[29]

319. WARNING SIGNAL FAILURE:
Nonspeech auditory display devices and circuits should be designed to preclude warning signal failure related to system or equipment failure

and vice versa. A positive and attention-demanding indication should be provided if failure occurs.[49]

320. NUMBER OF WARNING SIGNAL FREQUENCY COMPONENTS:
Warning signals should have at least four prominent frequency components.[58]

321. ALERT AND WARNING SIGNAL AUDIBILITY:
Alerts and warning signals should be audible in all parts of the vehicle.[48]

322. ALERT AND WARNING SIGNAL DISTINCTIVENESS:
The first 0.5 s of an alert or warning signal should be discriminable from the first 0.5 s of any other signal that may occur. (Based on reference 49.)

Speech Displays

323. WHEN TO USE:
A speech display should be used in situations where the user's eyes are busy or mobility is required. Avoid using a speech (or other auditory) display when frequency of use is high, when multiple messages must be displayed simultaneously, or when the user would be expected to remember a series of instructions.[31]

324. WHEN TO USE A SPEECH DISPLAY VS. A NONSPEECH AUDITORY DISPLAY:
Use a speech display rather than a nonspeech auditory display under the following circumstances:

a. **Flexibility is required.**
b. **The user has no special training in coded signals.**
c. **The message deals with a future time, requiring preparation.**
d. **In situations of stress, which might cause the user to forget the meaning of a coded signal.**[59]

325. OUTPUT RATE:
Use an output rate of approximately 150 to 180 words/min.[31,33]

326. STRUCTURE OF UNPREDICTABLE MESSAGES:
When output messages are unpredictable, begin a speech display with a small number of noncritical words to provide context, to allow the user

to pick up the speech cadence and quality, and to allow the user to get oriented to the subject matter. Critical information should occur at the end of the message.[31]

327. OPERABILITY TEST:
Speech displays should be equipped with circuitry test devices or other means of testing operability.[14]

328. FALSE ALARMS:
Speech alarm systems should be designed so that false alarms are avoided.[48]

329. WARNING SIGNAL FAILURE:
Speech display devices and circuits should be designed to preclude warning signal failure related to system or equipment failure and vice versa. A positive and attention-demanding indication should be provided if failure occurs.[49]

330. WHEN A FAILURE CAN RESULT IN SUSTAINED ACTUATION OF THE DISPLAY:
An interlocked, manual-disable control should be provided if there is any failure mode that can result in a sustained actuation of a speech display.[49]

331. ORDER OF INFORMATION IN AN INSTRUCTIONAL PROMPT:
In a speech display used as an instructional prompt to the user, put the goal first and the action last. For example, use "To confirm your destination, press one" rather than "Press one to confirm your destination."[31]

332. REPEAT CAPABILITY:
Provide the capability for the user to have a speech display repeated.[31]

333. APPROPRIATE USE:
Use a speech display to announce discrete events, not to present readings of continuously changing variables.[33]

334. PRESENTING LONG MESSAGES OR STAND-ALONE INFORMATION:
Do not use a speech display to present long, detailed messages or to present information that must be remembered by the user without benefit of a concurrent visual display.[33]

335. DIGITIZED VS. SYNTHETIC SPEECH:

Use digitized (recorded) speech instead of synthetic speech (made from the concatenation of basic speech sounds) whenever possible. Use synthetic speech only when a technical or practical barrier prevents the use of recorded voice.[34]

336. SYNTHETIC-SPEECH INTELLIGIBILITY:

When synthetic speech must be used, intelligibility can be improved through these steps:

a. **Ensure the listener is familiar with all possible interpretations of the message.**

b. **Provide the listener with training.**

c. **Begin any synthesized message with redundant words to allow the user to pick up the speech cadence and quality.**[34]

337. ALERTING SOUNDS WITH MACHINE-QUALITY WARNINGS:

When machine-quality speech displays are used exclusively for warnings, do not put any alerting nonspeech auditory display before the speech warning message.[33]

338. ALERTING WITH MACHINE-SOUNDING WARNINGS:

When machine-sounding speech displays are used for warnings and other functions (e.g., advisories), responses to user queries, and so forth, incorporate an alerting characteristic into the speech warnings.[33]

Comment: Possible alerting features might include a higher pitched voice, a "prefix" that is either speech or a nonspeech auditory display, or some other feature that makes the warning message distinctive and can be shown (presumably experimentally) to increase message detectability without increasing user response time.[33] A speech alarm display must consist of two segments:

a. An initial, nonspeech auditory display to attract attention and to designate the general problem.

b. A brief, standardized speech display that identifies the specific condition and optionally suggests appropriate action.[26]

339. INTENSITIES OF CAUTIONS AND WARNINGS:

Speech displays for caution conditions should be at least 10 dB(A) above the noise level at the operating position of the intended receiver, and for warnings should be at least 20 dB(A) above the noise level.[14]

340. INTERVAL BETWEEN SUCCESSIVE WARNINGS:
For speech warning displays, the length of time between successive presentations of the same message should depend upon the severity of the consequences of the user not correcting the problem.[33] Critical speech warning displays should be repeated with not more than a 3-s pause between messages until the warning state is terminated, either automatically or manually.[14]

341. MESSAGE PRIORITY SYSTEM:
When there could be the possibility of simultaneous presentation of automatically initiated messages, a message priority system should be provided such that the most critical message overrides for initial presentation any messages occurring lower on the priority list. Following initial presentation of the top priority message, other messages should be presented in the priority order, except that no caution messages should be presented until all warning messages are terminated.[14]

342. NUMBER OF SYLLABLES IN WARNINGS:
For speech warning displays, use a minimum of four syllables to provide sufficient linguistic context for warning comprehension after first enunciation of the message.[33]

343. CAPABILITY TO CANCEL WARNINGS:
For speech warning displays, provide the user with a means to cancel the message once it has been presented.[33]

344. RULES FOR RECORDING MESSAGES:
When recording speech displays, either digitized or synthesized:

a. Use a professional voice with the following characteristics:
   - It should be agreeable and assertive.
   - It should be clear in enunciation, free from regional dialects, authoritative, and confident, and should sound concerned but not detached or anxious.

b. All prompts and messages should be recorded by the same speaker.

c. If possible, record all messages during a single session to ensure voice homogeneity. This is especially important for systems with concatenated (synthetic) speech.

d. When recording spoken digits, such as vehicle speeds, the digits must be recorded for each position in which that digit will occur because, depending on position, the intonation of the utterance will be different.

e. **Do not change voices during a dialogue unless there is a purposeful reason for doing so.**[14,60,61]

345. USE OF SINGLE LETTERS AS CODES:

Avoid using single letters as codes where noise is present.[62]

346. WHEN TO REPEAT PROMPTS:

Repeat a prompt after a 10-s period of inactivity or after a command from the user.[63]

347. PHRASING OF PROMPTS:

When phrasing prompts, consider the following:

a. **Adopt terminology consistent with how users think about the task, and use that terminology consistently.**
b. **Use simple, explicit, and concise language.**
c. **Avoid passive voice or negative conditionals**
d. **For keypad entries, use the term "press" for prompting selections from menus (e.g., "To confirm your destination, press one").**[61]

Chapter 7. Workspace Design

In this chapter are guidelines for designing workspaces.

348. GENERAL METHODS FOR CONTROL AND DISPLAY PLACEMENT:
Controls and displays should be placed within the vehicle at locations that promote efficient procedures, safe operation, and maximum user awareness of the current system conditions. There are three general methods for achieving these conditions:

a. **Grouping by task sequence. All controls that operate sequentially to accomplish a particular task should be grouped together, along with their associated displays.**
   - **Displays that are observed in a specific sequence should be located so they are read in a left to right, top to bottom sequence, or other natural sequence.**
   - **Controls that are operated in a specific sequence should be located so they are used in a left to right, top to bottom sequence, or other natural sequence.**

b. **Grouping by system function. Within the constraints of grouping by task sequence, controls and displays should be assigned to control-display panels or areas within a panel in functional groups (e.g., all controls related to entering a destination should be grouped together).**

c. **Grouping by importance and frequency of use. The most important or frequently used controls should be placed in the primary position with respect to ease of reaching or grasping, and the center-most or closest visual position to the user (i.e., the visual position is: horizontally within ±15° of a line of sight straight ahead or the nominal line of sight, and vertically between the horizontal line of sight and 30° below it). Place these controls where visibility and accessibility are high and activation is easy.** (Based on references 14,48.)

349. WHEN THERE ARE RELATED CONTROLS AND DISPLAYS:
When there is a set of related controls and displays, the layout of displays should be symmetrical with the controls they represent.[48]

350. MULTIPLE CONTROL ACTIONS FOR A SINGLE FUNCTION:
Controls should be combined to eliminate the need for multiple control actions to perform a single function. For example, if two or more controls are operated in the exact same sequence each time they are used

and they perform only one task in this sequence, then combine the controls into one that performs all the steps.[14]

351. LOCATIONS OF FREQUENTLY USED DISPLAYS AND CONTROLS:
No frequently monitored visual display should be located where the user must continually turn his/her head or body to view it; no frequently used control should be located where the user continually has to reach a long distance for it.[10]

352. GENERAL ARRANGEMENT OF CONTROLS AND DISPLAYS:
Arrangement of controls and displays should be logical, but should not compromise the sequence of operation or functional integrity. Logical arrangements should be based on user expectations. These expectations will typically be met when components have a left to right and/or top to bottom arrangement and are identified in alphabetic or numeric sequence. For example, four related displays in a row should be designated A, B, C, D or 1, 2, 3, 4; correspondingly, controls related to these displays should also be designated A, B, C, D or 1, 2, 3, 4. Where other user expectations can be identified, components should be arranged to match those expectations.[48]

353. LOCATION OF DISPLAYS REQUIRING ACCURATE READ-OUT:
Displays requiring accurate read-out should be closer to the user's line of sight than displays needing only gross monitoring.[48]

354. GENERAL LOCATION OF CONTROLS AND DISPLAYS:
All controls and displays (including legends) should be readable from the user's normal head position, allowing for normal head rotation.[14]

355. ENHANCEMENT TECHNIQUES FOR GROUPS OF CONTROLS AND DISPLAYS:
Use enhancement techniques for setting apart groups of controls and displays. Preferred techniques for enhancement are (see figure 27):

a. Spacing, which consists of physically separating groups of components on a panel with enough space between groups so that the boundaries of each group are obvious. Spacing between groups should be at least the width of a typical control or display in the group.

b. Demarcation, which consists of circumscribing functional or selected groups with contrasting lines. Demarcation outline borders should not be wider than the character stroke width in the associated function labels, except for areas containing emergency or critical functions, where the border width should be twice the character

stroke width. Demarcation borders on light colored or gray panels should be black, while emergency panels should use a red border.

c. Color shading, which should be used to enhance recognition if it provides adequate contrast and is consistent with other color coding of controls and displays.[14,48]

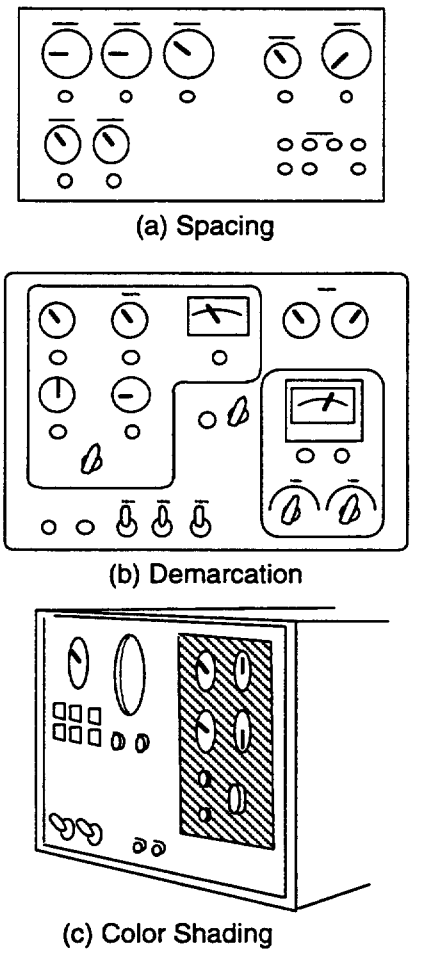

Figure 27. Enhancement techniques for control-display panels.

356. NONOBSCURATION OF DISPLAYS:
Controls and displays should be located so that displays are not obscured during control operation.[48]

357. LOCATION OF EMERGENCY DISPLAYS AND CONTROLS:
Emergency displays and controls should be located where they can be seen and reached with minimal delay. Warning lights should be within a 15° cone around the user's nominal line of sight, and

emergency controls should be close to the nearest available hand in its nominal operating position.[14]

358. ENHANCEMENT OF EMERGENCY DISPLAYS AND CONTROLS:
Emergency displays and controls should have distinctive enhancement techniques applied to them (see guideline 355), as well as multimodal alarms (auditory and visual). A visual alarm should be located above the related control or display that is to be used for corrective action.[48]

359. LIGHTING FOR CRITICAL DISPLAYS:
Artificial lighting should be provided for all critical displays (including control labels) so that they can be read in the day or at night.[10]

360. GLARE:
Highly reflective or glossy materials should be avoided in the general forward viewing area.[10]

361. ILLUMINATED DISPLAYS AND CONTROLS:
Illuminated displays and controls should be designed and located so that they do not reflect upon the windshield.[10]

Chapter 8. Labeling

In this chapter are guidelines for labeling controls and other workspace elements.

362. WHEN TO USE:

Labels (including legends and other markings) should be provided wherever it is necessary for a user to identify a control or display; to interpret how a control operates and/or its function, or determine what a display is used for; to follow procedures; and/or to avoid hazards in the use of systems, equipment, or facilities. Labels are unnecessary where the item and its use are obvious to the observer. (Based on reference 14.)

363. USE OF ABBREVIATIONS:

Use whole words instead of abbreviations wherever space permits. If abbreviations are used, create a standard list of abbreviations that is appropriate for the system users. Acronyms should be used sparingly and only if their meanings have been well established.[10]

364. PERMANENCE:

All labels should be made wear resistant, damage resistant, and as permanent as possible.[10]

365. NUMBER OF WORDS:

On a label, use as few words as necessary to convey the intended meaning. Consider using special markings and/or symbols (e.g., icons) when they will unambiguously convey meaning in a more direct manner than several words.[10]

366. BASIS FOR CHOOSING WORDS AND SYMBOLS:

Choose words and symbols on the basis of user familiarity whenever possible, provided the words or symbols express exactly what is intended.[14]

367. GENERAL CONTENT:

A label should express exactly what action is intended. It should be brief but unambiguous; punctuation should generally be omitted.[49]

368. NOMENCLATURE CONSISTENCY:

Match the nomenclature printed on labels with that used in procedures.[48]

369. GENERAL RULES FOR LOCATING LABELS:
Locate labels as follows:

a. Avoid locating labels where they will be blocked by equipment, the control, or the user.
b. When a control is above eye level, put its label below it; when a control is below eye level, put its label above it.
c. Be consistent in label positioning throughout a control panel(s).
d. Labels should be placed on or very near the items they identify; any confusion with other items and labels should be eliminated.
e. A label should not appear on the control itself when an adjustment or manipulation will require the user's hand to obscure the label or will rotate or move the label into an unnatural reading position.[10,14,48]

370. ROTATING CONTROLS:
Do not put labels on rotating controls.[10]

371. TYPE OF WORDS:
Labels should use familiar words; overly technical or difficult words should be avoided.[14]

372. ORIENTATION OF WORDS:
Words should be printed so they read horizontally, not vertically. Exception: Vertical arrangements of letters on labels may be used only where space is limited and when they are not critical for personnel safety or task performance. Vertical labels should read from top to bottom.[14]

373. UNRELATED CONTROLS AND DISPLAYS:
Highly similar names for functionally unrelated controls and/or displays should be avoided.[14]

374. CONTROLS AND DISPLAYS USED TOGETHER:
When controls and displays must be used together, appropriate labels should indicate their functional relationships.[14]

375. IDENTICAL FUNCTION AND APPLICATION:
When function and application are identical, words or abbreviations should be identical.[14]

376. LETTER CASE:
Capital letters should be used in labels. Exception: If the label has

several long lines of text, upper- and lower-case letters should be used.[14]

377. BOLD FACED LETTERS:

Bold faced letters should be used only for short words or phrases that require emphasis.[14]

378. CHARACTER HEIGHTS:

The height of letters and numbers should conform to the specifications shown in table 29. (Based on reference 13.)

Table 29. Heights of label characters.

	Luminance	
	≤ 3.5 cd/m^2 (1 fl)	>3.5 cd/m^2 (1 fl)
For critical markings with position variable (e.g., numbers on counters)	$\frac{5(\text{viewing distance})}{710}$ to $\frac{8(\text{viewing distance})}{710}$, where height and viewing distance are in millimeters.	$\frac{3(\text{viewing distance})}{710}$ to $\frac{5(\text{viewing distance})}{710}$, where height and viewing distance are in millimeters.
For critical markings with position fixed (e.g., numbers on a control)	$\frac{4(\text{viewing distance})}{710}$ to $\frac{8(\text{viewing distance})}{710}$, where height and viewing distance are in millimeters.	$\frac{2.5(\text{viewing distance})}{710}$ to $\frac{5(\text{viewing distance})}{710}$, where height and viewing distance are in millimeters.
For noncritical markings (e.g., identification labels)	$\frac{2.1(\text{viewing distance})}{710}$ to $\frac{5(\text{viewing distance})}{710}$, where height and viewing distance are in millimeters.	$\frac{2.1(\text{viewing distance})}{710}$ to $\frac{5(\text{viewing distance})}{710}$, where height and viewing distance are in millimeters.

379. HEIGHT-TO-WIDTH RATIOS:

Label character height-to-width ratios should be as follows:

a. For letters: 1:1 to 5:3.

b. For numbers: 5:3.

Exceptions: The 4 should be one stroke width wider; the 1 should be one stroke width wide.[48]

380. BETWEEN-WORDS SPACING:

The minimum spacing between words should be one-half the width of one character; the preferred spacing is one character width. Exceptions: To avoid confusion, greater width is required between words that begin or end with 1's, i's, and l's (because those characters are less wide than other characters).[14]

381. BETWEEN-LINES SPACING:

Minimum spacing between lines should be one-half the height of one character.[13]

382. ILLUMINATED LABELS:

Provide illuminated labels for all controls, not just those to be operated in the dark.[10]

383. CHARACTER POLARITY:

Where the ambient illuminance will be above 9.7 lx (0.9 fc), use dark characters on a light background.[13]

384. UNITS OF MEASUREMENT:

Units of measurement (e.g., mi/h) should be labeled where needed on all panels, displays, and controls.[13]

385. EXTENDED INSTRUCTIONS:

Extended instructional or procedural information for labels should be concise, but understandable to the intended user. Omit words that are unnecessary to convey the meaning of the message. When procedural steps are implied, place each procedural step on a separate line and use numbers, bullet points, dots, or other technique to emphasize the beginning of each step.[14]

386. HIERARCHICAL SCHEME:

A hierarchical labeling scheme should be used to reduce confusion, user search time, and redundancy. Labels should not repeat information contained in higher level labels. Character sizes for hierarchical labels

should conform to the specifications shown in tables 30, 31, and 32 (and see figure 28). (Based on reference 48.)

Table 30. Hierarchical-labels character heights: component labels.

	Control Marking Label	Component Label	
	All luminance levels	≤3.5 cd/m^2 (1 fl)	>3.5 cd/m^2 (1 fl)
For critical markings with position variable (e.g., numbers on counters)	See table 23	$\frac{6.3(\text{viewing distance})}{710}$ to $\frac{10(\text{viewing distance})}{710}$, where height and viewing distance are in millimeters.	$\frac{3.8(\text{viewing distance})}{710}$ to $\frac{6.3(\text{viewing distance})}{710}$, where height and viewing distance are in millimeters.
For critical markings with position fixed (e.g., numbers on a control)	See table 23	$\frac{5(\text{viewing distance})}{710}$ to $\frac{10(\text{viewing distance})}{710}$, where height and viewing distance are in millimeters.	$\frac{3.1(\text{viewing distance})}{710}$ to $\frac{6.3(\text{viewing distance})}{710}$, where height and viewing distance are in millimeters.
For noncritical markings (e.g., identification labels)	See table 23	$\frac{2.6(\text{viewing distance})}{710}$ to $\frac{6.3(\text{viewing distance})}{710}$, where height and viewing distance are in millimeters.	$\frac{2.6(\text{viewing distance})}{710}$ to $\frac{6.3(\text{viewing distance})}{710}$, where height and viewing distance are in millimeters. *(Table continued on next page.)*

Table 31. Hierarchical-labels character heights: subsystem/functional group labels.

	Subsystem/Functional Group Label	
	≤3.5 cd/m^2 (1 fl)	>3.5 cd/m^2 (1 fl)
For critical markings with position variable (e.g., numbers on counters)	$\frac{7.8(\text{viewing distance})}{710}$ to $\frac{12.5(\text{viewing distance})}{710}$, where height and viewing distance are in millimeters.	$\frac{4.8(\text{viewing distance})}{710}$ to $\frac{7.8(\text{viewing distance})}{710}$, where height and viewing distance are in millimeters.
For critical markings with position fixed (e.g., numbers on a control)	$\frac{6.3(\text{viewing distance})}{710}$ to $\frac{12.5(\text{viewing distance})}{710}$, where height and viewing distance are in millimeters.	$\frac{3.9(\text{viewing distance})}{710}$ to $\frac{7.8(\text{viewing distance})}{710}$, where height and viewing distance are in millimeters.
For noncritical markings (e.g., identification labels)	$\frac{3.3(\text{viewing distance})}{710}$ to $\frac{7.8(\text{viewing distance})}{710}$, where height and viewing distance are in millimeters.	$\frac{3.3(\text{viewing distance})}{710}$ to $\frac{7.8(\text{viewing distance})}{710}$, where height and viewing distance are in millimeters.

Table 32. Hierarchical-labels character heights: system/workstation labels.

	System/Workstation Label	
	≤3.5 cd/m^2 (1 fl)	>3.5 cd/m^2 (1 fl)
For critical markings with position variable (e.g., numbers on counters)	$\frac{9.8(\text{viewing distance})}{710}$ to $\frac{15.6(\text{viewing distance})}{710}$, where height and viewing distance are in millimeters.	$\frac{6.0(\text{viewing distance})}{710}$ to $\frac{9.8(\text{viewing distance})}{710}$, where height and viewing distance are in millimeters. *(Table continued on next page.)*

Table 32. Hierarchical-labels character heights: system/workstation labels (continued).

	System/Workstation Label	
	≤3.5 cd/m^2 (1 fl)	>3.5 cd/m^2 (1 fl)
For critical markings with position fixed (e.g., numbers on a control)	$\frac{7.9(\text{viewing distance})}{710}$ to $\frac{15.6(\text{viewing distance})}{710}$, where height and viewing distance are in millimeters.	$\frac{4.9(\text{viewing distance})}{710}$ to $\frac{9.8(\text{viewing distance})}{710}$, where height and viewing distance are in millimeters.
For noncritical markings (e.g., identification labels)	$\frac{4.1(\text{viewing distance})}{710}$ to $\frac{9.8(\text{viewing distance})}{710}$, where height and viewing distance are in millimeters.	$\frac{4.1(\text{viewing distance})}{710}$ to $\frac{9.8(\text{viewing distance})}{710}$, where height and viewing distance are in millimeters.

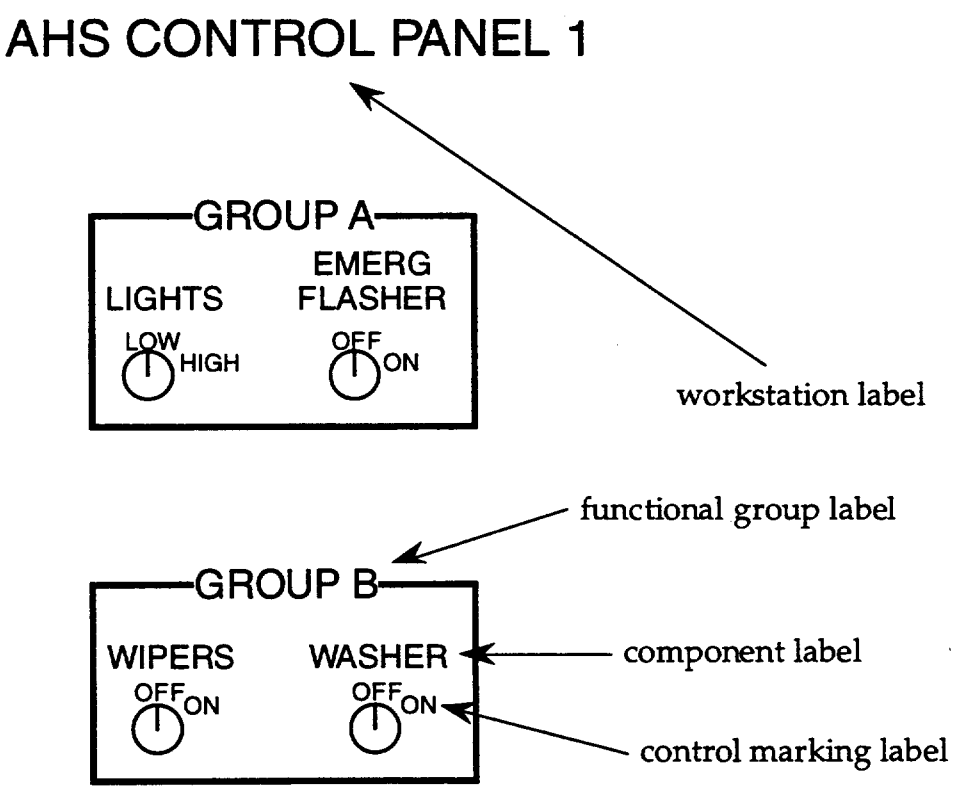

Figure 28. Example hierarchical labeling scheme.

387. CONTROL-POSITION LABELING:
Control-position labeling should indicate the direction of motion (e.g., increase, decrease) for continuous motion controls and the positions of discrete controls.[48]

388. FUNCTIONAL GROUPS OF CONTROLS AND DISPLAYS:
Labels should be used to identify functionally grouped controls and displays; the labels should be centered above the functional groups they identify. When demarcation is used to set off a functionally related group (see guideline 355b), the label should be located either in a break of the demarcation line or just below the line.[14]

389. SHADOWS AND GLARE:
Labels should not be placed in shadowed positions and care should be taken to eliminate glare on or from them.[48]

390. BETWEEN-LABELS SPACING:
Adjacent labels should be separated by sufficient space so that they are not read as one continuous label.[48]

Chapter 9. User-Computer Dialogues

In this chapter are guidelines for user-computer interactions in general and for the specific dialogue types selected for inclusion in the handbook.

General Guidelines for User-Computer Interactions

In this section are general guidelines for interactions between the user and a computer.

391. SYMBOLS AND PICTURES:

Standardized graphic symbols and pictorial representations should be used in addition to text messages for communicating vehicle status information.[6]

Comment: When display space is limited and abbreviations are used, their meaning may be less clear than the meaning of a good set of icons. However, given that iconic representations may not always be interpreted in the ways intended by their creator, well-designed experiments should be carried out on a sample representative of the user population along critical dimensions to ensure that any icons used are clearly understood by at least a significant majority of AHS users.

392. MINIMIZING DRIVER WORKLOAD:

When minimizing driver workload is important, avoid presenting irrelevant status information or imposing tasks that could be accomplished by the roadside or vehicle. Noncritical status messages should be inhibited during periods of high workload.[6]

Comment: Presenting information that the driver does not need for an immediate task(s) but that might draw the driver's attention away from those tasks could have negative consequences. Similarly, functions that can be accomplished under automated control should not be allocated to the driver when the driver's workload is high due to other tasking.

393. CHECK-IN PROCEDURES:

If the driver will be required to configure the vehicle prior to, during, or after check-in, use computer-driven checklists.[6]

Comment: Depending upon the extent of the driver's tasking, it may be better to not rely on the driver's memory. A computer-driven checklist, with appropriate highlighting of critical steps (see guideline 394), seems especially appropriate for first time AHS users.

394. ELECTRONIC CHECKLISTS:

If electronic checklists are used, emphasize critical steps, put critical items early in the list, and phrase items in terms of the desired status or value being considered (e.g., lights on).[6]

395. INFORMATION ABOUT WHETHER THE SYSTEM OR THE DRIVER IS IN CONTROL:

Ensure that a driver always has explicit information about whether the driver is in control or the automation is in control. Redundant coding and/or multiple displays should be used for this purpose. When there is a phased transfer of control on a function by function basis (e.g., steering followed by speed control), the automation status of each independent function being transferred should be explicitly annunciated.[6]

Comment: This is critical so that the driver does not rely on the automation when in fact the vehicle is under manual control.

396. MANUAL STEERING IN AN EMERGENCY:

When there is a need for manual steering under emergency conditions, use speech commands that tell the driver the appropriate steering maneuver (e.g., "Turn left"). Visual cues may be used to supplement the speech commands.[6]

Comment: It is assumed that the automation "knows" where all potential obstacles are before issuing such directions. If that is not the case, directional guidance should not be given.

397. WHAT INFORMATION TO PRESENT:

All information essential to decisionmaking should be presented to the user, and only such information.[31]

398. STRUCTURE OF SCREEN FORMATS:

Screen formats should be designed with a consistent structure that is evident to the user, so that any particular type of information is always presented in the same place and in the same way.[42]

399. PRESENTING INFORMATION TO GUIDE THE USER THROUGH A TRANSACTION :

Screen formats should be designed so that information intended to guide the user through a transaction is readily distinguishable from other information.[42]

400. SCREEN TITLE:
Each screen should have a unique title in a highly visible location that is consistent across screens.[32]

401. CHARACTER CASE:
Text should be in mixed case characters. Exception: Captions, labels, titles, etc., that need to stand out on a screen may be in all upper case characters.[31]

402. CURSOR DESIGN:
Cursors should be designed to be readily distinguishable from other displayed symbols and information.[42]

403. CURSOR VISIBILITY:
A cursor should be visible to the user at all times.[32]

404. CURSOR IMAGE QUALITY:
The cursor should maintain good image quality throughout its entire range of motion within a screen. The position of the cursor should be clearly visible while it is moving. And, the cursor should obscure other characters, not vice versa. Exception: A blinking cursor (e.g., a blinking underline) need not obscure other characters.[32]

405. MESSAGE VOICE:
Active rather than passive voice should be used in messages (e.g., say "To clear the screen, press CLEAR" rather than "The screen is cleared by pressing CLEAR").[42]

406. WHEN TO USE ABBREVIATIONS AND ACRONYMS:
An abbreviation and/or acronym should be used only if a screen does not have sufficient space for the unabbreviated word or if the abbreviation or acronym is used more frequently than the complete word (e.g., AHS instead of automated highway system).[32]

407. HOW TO FORM ABBREVIATIONS:
If a word must be abbreviated and there is no conventional abbreviation for it, use a single, simple rule (e.g., truncation) to form the abbreviation (e.g., destination becomes abbreviated to dest.). The same rule should be applied throughout to form abbreviations.[32]

408. UNDERSTANDABILITY OF ABBREVIATIONS AND ACRONYMS:
An abbreviation and/or acronym should be clearly understood by the user population.[32]

409. CODES AND ABBREVIATIONS, AND CONVENTION:
Codes and abbreviations should conform to conventional usage and use expectations. (Based on reference 42.)

410. AVAILABILITY OF MEANINGS OF ABBREVIATIONS AND ACRONYMS:
When abbreviations and/or acronyms are used, they and the complete words they represent should be easily accessible to the user (e.g., in an on-line glossary).[32]

411. WORDING OF MESSAGES:
When wording labels, prompts, and other messages, terminology familiar to users should be used.[42]

412. WORDING IN PROMPTS AND CONTROL ENTRIES:
The wording in prompts should be consistent with the wording in control entries (e.g., say "To cancel a transaction, press CANCEL" rather than "To abort a transaction, press CANCEL").[42]

413. AFFIRMATIVE WORDING:
Prompts and other messages should be stated in the affirmative (e.g., say "You must enter a destination before entering the check-in area" rather than "You cannot enter the check-in area until you enter a destination").[31]

414. ORDER OF INFORMATION IN PROMPTS:
Information in a prompt should be presented in chronological order (e.g., say "Press CHG LANE and then indicate direction" rather than "Indicate the direction of the turn after pressing CHG LANE"). Information in a prompt should be presented in the order in which the user will need it (e.g., say "To change lanes, press CHG LANE" rather than "Press CHG LANE to change lanes").[31]

415. FORMAT OF PROMPTS:
White space, justification, and visual cues should be used to format prompts. For example:

Poor:	**To go back one screen, press BACK; to go to the main menu, press MAIN.**
Improved:	**To go back one screen, press BACK.** **To go to the main menu, press MAIN.**[31]

416. TERMINOLOGY:
Use consistent terminology in labels, prompts, etc. (Based on reference 31.)

417. DESTRUCTIVE COMMANDS:
The user should be required to take some explicit action to confirm a potentially destructive command (e.g., "Delete . . . . ") before the computer will execute it.[42]

418. UNDOING THE LAST ACTION:
Provide a simple means for the user to undo his/her last action (e.g., an UNDO key).[31]

419. HELP FUNCTION:
The user should be provided with a context-sensitive help function. A single, standard action that is always available should be provided to request the help.[13,31]

420. BROWSING THROUGH HELP:
The user should be allowed to browse through on-line help screens to gain familiarity with system functions and operating procedures.[13]

421. CANCELING AN OPERATION:
Provide a means for the user to cancel an operation that is in progress.[31]

422. SCROLLING AND PAGING:
A user should be able to move through a set of linked screens by either scrolling or paging:

a. **Scrolling involves continuous movement (vertical or horizontal) within a set of linked screens. Users perceive two types of scrolling: moving text, in which the information on the screen appears to move behind a fixed window; and panning, in which a window appears to move in front of the information on the screen.**
b. **Paging involves discrete movement within a set of linked screens; the unit of movement is typically one page.**[32]

423. PREFERRED SCROLLING METHOD:
When scrolling is used, only one method should be implemented. Panning is preferred to moving text.[32]

424. SCROLL INCREMENT:

The scroll increment should be one line vertically or one character horizontally. The rate of scrolling should allow the user to scan the information as it moves past on the screen.[32]

425. DIRECTION OF SCROLLING:

The direction that information will be scrolling should be evident to the user before the user begins to scroll.[32]

426. DIRECTION OF PAGING:

The direction that information will be paging should be evident to the user before the user begins to page.[32]

427. MOVEMENT OF INFORMATION WHEN PAGING:

When paging, movement of information should be discrete, with no display of intermediate pages between the starting page and the selected page.[32]

428. SYSTEM-DELAY MESSAGES:

When system functioning requires the user to stand by, a message such as "Working" should be displayed until user interaction is again possible. When the delay is likely to exceed 15 s, a message should inform the user about the cause of the delay and approximately how long it will last. For delays exceeding 60 s, a count-down display should show delay time remaining.[13,64]

429. INTEGER NUMBERS:

Integer numbers should be right justified.[31] **For example:**

Poor:	**10**
	100
	1,000
Improved:	**10**
	100
	1,000

430. REAL NUMBERS:

Real numbers should be decimal aligned.[31] For example:

Poor:	**24.8**
	123.56
	1.49
Improved:	**24.8**
	123.56
	1.49

431. LEADING ZEROS:

Avoid leading zeros when they are not necessary and/or not standard (e.g., the leading zeros are standard in 24-h clock times, such as 0130).[31]

Function Keys Dialogue

DEFINITION:

There are two types of function keys, as follows:

a. **Dedicated, which are hard keys that perform only a single function. The name of the function (e.g., ENTER) is on the key top.**

b. **Nondedicated, which are hard keys that perform different functions depending upon the mode the system is in or whether some other key is pressed in combination with the function key. As an example of the latter, a typical alphanumeric keyboard has a key that types 5 when pressed alone and % when pressed in combination with the SHIFT key. The [% / 5] key is a nondedicated function key (and the SHIFT key is a dedicated function key).**

   Nondedicated function keys have either no labels or generic labels (e.g., F1, F2). Their current function may be displayed as a "soft" key label on an associated computer screen (see figure 29). (Based on reference 31.)

432. WHEN TO USE:

Consider function keys for tasks requiring only a limited number of control entries, or for use in conjunction with other dialogue types as a ready means of accomplishing critical entries that must be made quickly without syntax error.[42]

433. IF A KEY IS USED FOR MORE THAN ONE FUNCTION:

If a key is used for more than one function, the function that is currently available should always be indicated to the user.[42]

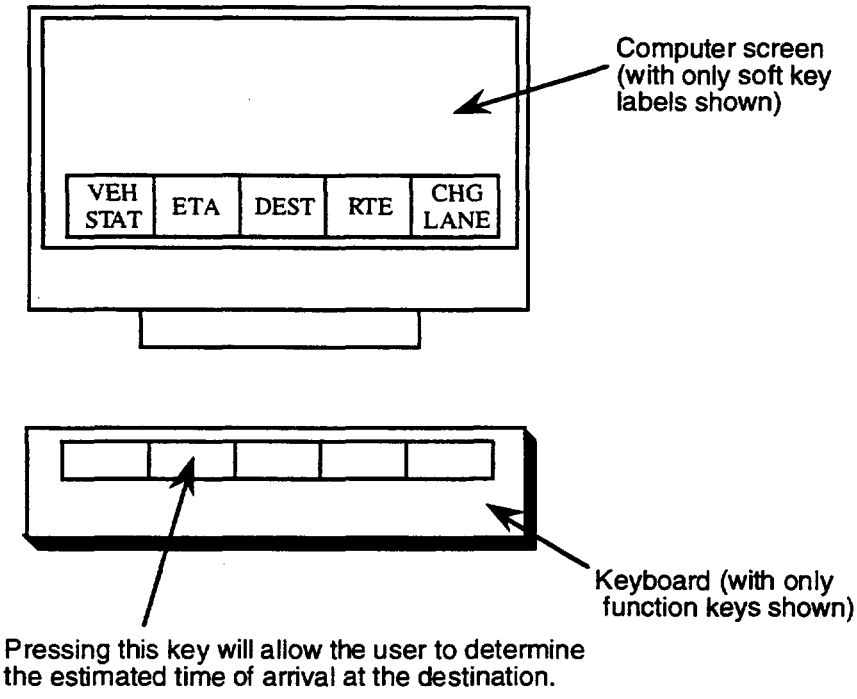

(a) Soft labels for nondedicated function keys.

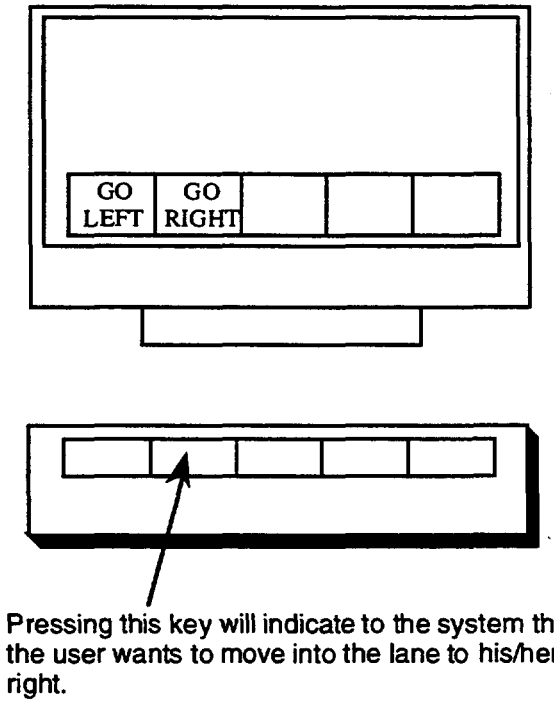

(b) The same nondedicated function keys as in (a), but with different soft key labels (indicating their new functions).

Figure 29. Soft labels for nondedicated function keys.

434. WHEN FUNCTION KEY ACTUATION DOES NOT PROVIDE OBVIOUS FEEDBACK:

When function key actuation does not result in any immediately observable response, provide the user with some other form of computer acknowledgment.(42)

435. INDICATING ACTIVE KEYS:

If some function keys are active and some are not, indicate the current subset of active keys in some noticeable way.(42)

436. UNNEEDED KEYS:

When a function key is not needed for any current transaction, temporarily disable it under computer control.(42)

437. CONTINUOUSLY AVAILABLE FUNCTIONS:

When a function is continuously available, assign that function to a dedicated function key.(42)

438. CONSISTENCY IN KEY ASSIGNMENTS:

If a function is assigned to a particular key in one transaction, assign that function to the same key in other transactions.(42)

439. USE OF QUALIFIER KEYS:

The use of qualifier keys (e.g., SHIFT, CONTROL) should be minimized. When they are used, they should be used consistently throughout the system.(31)

440. RELATIONSHIP BETWEEN SOFT KEY LABELS AND HARD FUNCTION KEYS:

Spatial relationships between soft function key labels (on the screen) and their associated hard function keys should be preserved; a horizontal layout is preferred (i.e., both the labels and the hard keys should be laid out from left to right).(31)

441. GENERIC LABELING OF HARD KEYS ASSOCIATED WITH SOFT KEY LABELS:

When the hard function keys associated with soft function key labels have generic labels on them (e.g., F1, F2):

a. The labels on the hard keys should also appear as part of the soft function key labels (see figure 30).

b. The order of the labels on the screen should correspond to the order of the hard keys.(31)

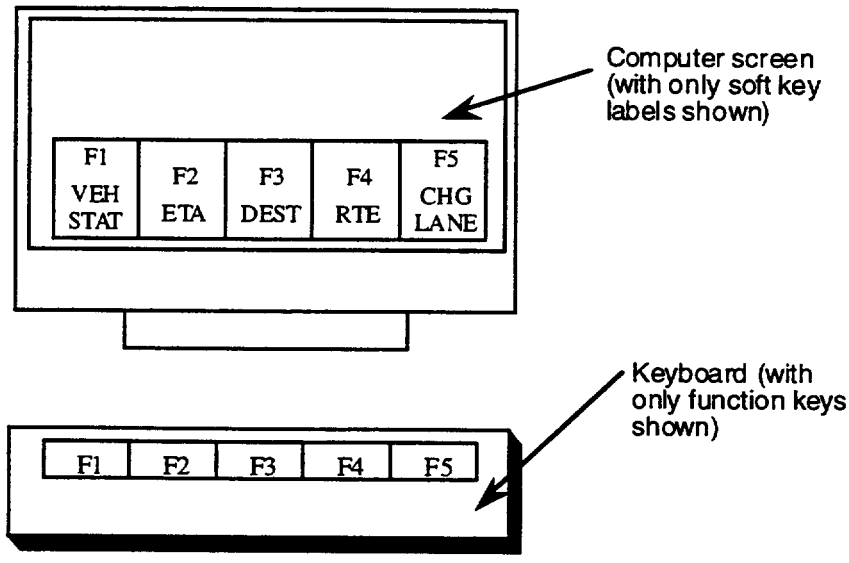

Figure 30. Correct spatial relationship between soft function key labels and associated hard function keys.

442. NUMBER AND USE OF FUNCTION KEYS:

There should be a limited number of function keys, and they should be used to perform highly frequent actions.(32)

443. FUNCTION KEY LABELS:

Each function key should be labeled clearly and uniquely to describe its function.(32)

444. HARD KEYS AND USE OF GENERAL LABELING GUIDELINES:

Labels on hard function keys should conform to the applicable guidelines in chapter 8 of this handbook.

445. SOFT KEY LABELS AND USE OF DISPLAYS GUIDELINES:

Soft function key labels should conform to the applicable guidelines in chapters 5 and 6 of this handbook.

446. RESULTS OF PRESSING A FUNCTION KEY:
Pressing a function key should result in a single action that does not change with repeated key presses.[32]

447. PRESSING A FUNCTION KEY IN A SEQUENCE OF UNRELATED KEY PRESSES:
Pressing a function key in a sequence of key presses unrelated to the function should result in a message asking the user whether he/she really intended to select that function; it should not result in the action normally produced by the function key unless the user responds positively to the question.[32]

Menu Selection Dialogue

DEFINITIONS:
Menu selection provides a user initiated transaction sequence that permits the user to select a control option from a display of several choices. There are three main types of menus:

a. A static menu is one that is displayed continuously until the user makes a selection.
b. A pop-up menu is not displayed until the user selects it, at which point it appears to pop up from the bottom of the screen.
c. A pull-down menu is not displayed until the user selects it, at which point it appears to pull down from the top of the screen.[32]

Only static menus are discussed in this handbook.

448. WHEN TO USE:
Consider menu selection for tasks that involve a choice among a constrained set of alternative actions, that require little entry of arbitrary data, where users may have little training, and where computer response is relatively fast.[42]

449. WHEN MENU SELECTION IS THE PRIMARY MEANS OF SEQUENCE CONTROL:
When menu selection is the primary means of sequence control, and especially if choices must be made from extensive lists of displayed control options, option selection by direct pointing (e.g., using a touch screen) should be permitted.[42]

450. MENU TITLE:

A menu should have a brief title indicating the nature of the choice to be made.[32,42]

451. MENU LIST FORMAT:

When multiple menu choices are displayed in a list, each choice should be displayed on a new line, i.e., format the list as a single column. Exception 1: Displaying choices in several columns may be considered where shortage of display space dictates a compact format; if there are only a few choices, they might be displayed in a single row.
Exception 2: An exception could be made for hierarchic menus, where a high level menu might be shown in the left column of a display, accompanied by a lower level menu in the right column, the choices of which change to reflect whatever selection is currently made from the high level menu.[42]

452. ACTUATION WHEN SELECTION IS BY POINTING:

If menu selection is accomplished by pointing (e.g., with a touch screen), provide for dual actuation: The first action designates (positions a cursor at) the desired choice, the second action makes an explicit control entry.[42]

453. COMMAND AREA WHEN SELECTION IS BY CODE ENTRY:

When menu selection is accomplished by code entry, provide a standard command entry area (window) where the user enters the selected code. Locate that entry area in a fixed location on all screens.[42] (See figure 31.)

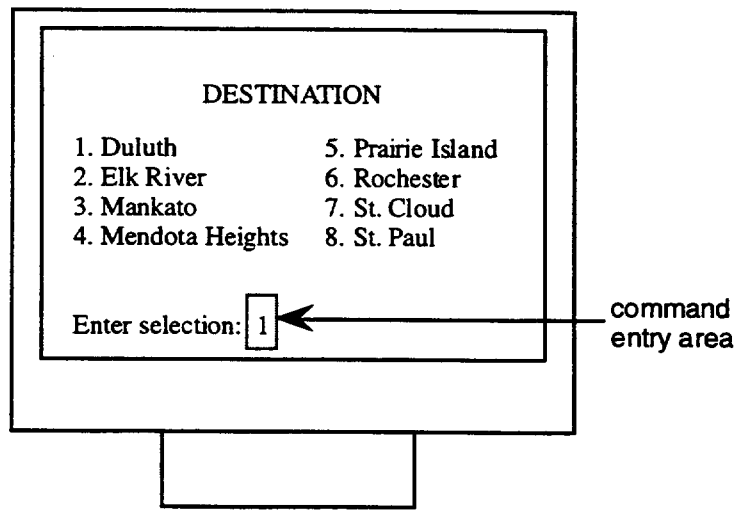

Figure 31. Use of a standard command entry area for selection codes.

454. CODE PRESENTATION WHEN SELECTION IS BY CODE ENTRY:
When menu selection is accomplished by code entry, the code associated with each choice should be shown in a consistent, distinctive manner (e.g., use an equal sign, as in "n = next page").[42]

455. NULL ENTRY WHEN CONTROL IS BY KEYED COMMAND OR OPTION CODE:
When control is accomplished by keyed command or option code entry, if there is a default for a null control entry, that default should be indicated to the user (e.g., "To see more choices, press ENTER").[42]

456. WORDING OF CHOICES:
The wording of menu choices should consistently represent commands to the computer rather than questions to the user (e.g., say "Print" rather than "Print?").[42]

457. WHEN SELECTION IS BY LETTER CODE:
If letter codes are used for menu selection, those letters should be used consistently in designating choices from one transaction to another.[42]

458. WHEN SELECTION IS FROM A LONG LIST:
When menu selection must be made from a long list, and not all choices can be displayed at once, provide a hierarchic sequence of menu choices rather than one long multipage menu. Exception: Where a long list is already structured for other purposes, such as a list of destinations, it might be reasonable to require the user to scan multiple display pages to find a particular choice. Even in such cases, however, an imposed structure for sequential access may prove more efficient, as when a user can enter preliminary letters to access a long alphabetic list (e.g., typing "wa" to go directly to Washington).[42]

459. CURSOR PLACEMENT WHEN SELECTION IS BY POINTING:
When menu selection is by pointing, the computer should place the cursor automatically at the first listed choice. When menu selection is by code entry, place the cursor in the command entry area (see figure 31).[42]

460. INDICATION OF CURRENT POSITION IN A HIERARCHIC MENU:
When hierarchic menus are used, some indication of current position in the menu structure should be displayed to the user. A menu tree showing the hierarchy should be included in the user's manual.[13,42]

461. RETURNING TO THE NEXT HIGHER LEVEL IN A HIERARCHY:
When hierarchic menus are used, only one, simple control action should be required to return to the next-higher-level menu.[42]

462. FEEDBACK ABOUT CHOICE SELECTION:
Feedback that a menu choice has been selected should be provided by making that item perceptually distinct.[32]

463. FEEDBACK ABOUT COMMANDED-ACTION COMPLETION:
If the completion of an action commanded by selection of a menu choice has a result that is visible to the user, that result is sufficient feedback to the user. If completion of the action has no visible result, feedback should be provided by a message in a message area. After the completion of all actions commanded by a menu item, the menu should be removed from the screen.[32]

464. HIERARCHY DEPTH VS. BREADTH:
Menu hierarchy depth should be minimized at the expense of breadth (see table 33).[31]

Table 33. Maximum menu hierarchy breadth.

User/Task Variables	Maximum Optimal Menu Breadth[1]
Choice items are complex and/or choice items cannot be grouped.	≤10 choice items per screen
Choice items are not complex and choice items can be grouped, but users are infrequent/casual.	11 to 20 choice items per screen
Choice items are not complex and choice items can be grouped, and users are frequent/expert.	≥21 choice items per screen

[1] Within the ranges given, actual breadth and depth should be determined by the most natural categorization of items into a hierarchy.

465. INACTIVE CHOICES:
Inactive menu choices should be "grayed out" (i.e., shown in lightened characters) and unselectable.[31] **(See figure 32.)**

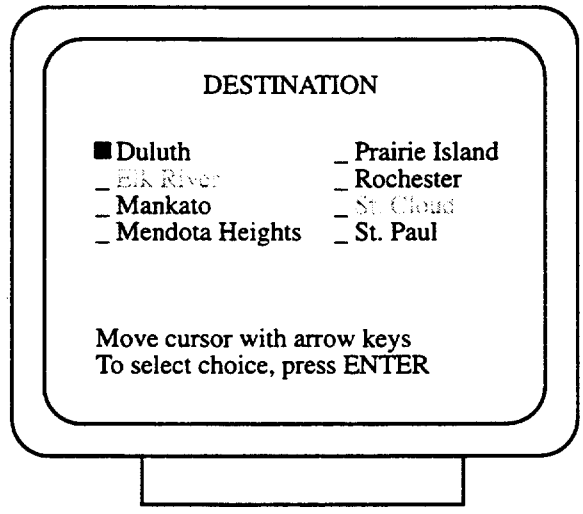

Figure 32. Inactive menu choices are "grayed out."

466. GENERAL RULES FOR CHOICES:

Menu choices should be brief, consistent in grammatical style (e.g., all start with verbs) and placement (e.g., make HELP always the last item on a menu), and matched with corresponding menu titles (e.g., if the menu item selected is "Destinations," the screen to which it leads should be titled "DESTINATIONS" as opposed to "AVAILABLE CITIES").[31]

467. ORDERING OF CHOICES:

Menu choice labels should be ordered according to the following methods, listed with the preferred first:

a. Convention.

b. Frequency of use.

c. Order of use.

d. Categorical or functional groups.

e. Alphabetical order.

The specific method chosen will depend on the user and on task variables.[31]

468. WHEN NUMBERS ARE USED WITH CHOICES:

If numbers are used to code menu choices, they should start with 1.[31]

469. WHEN CHARACTER CODES ARE USED WITH CHOICES:

If character codes are used to code menu items (e.g., "d" for destination),

the menu items should be left justified in a column and their associated codes should be aligned in a column to the left of the menu items.[31]

470. WHEN A CURSOR IS USED TO SELECT A CHOICE:
When a cursor is used to select a menu choice, a separate control action should be required to accept the selection. (Based on reference 42.) **(See figure 33.)**

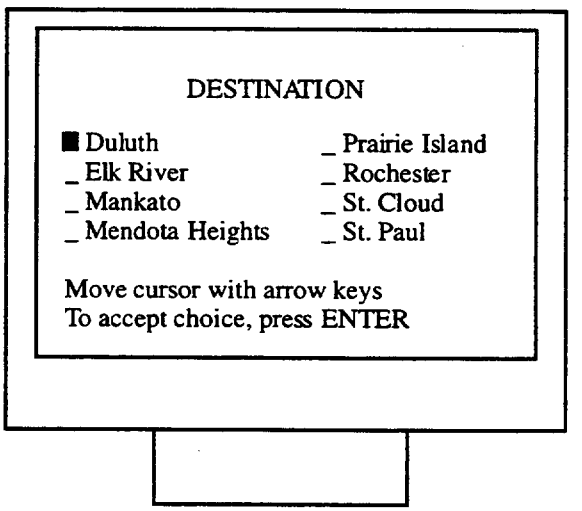

Figure 33. Use of a separate control action to accept a choice selected by a cursor.

471. MENU SELECTION SHORT CUTS:
The user should be able to go directly to a specific menu by typing ahead (entering all choices from all successive menus in a particular pathway all at once, without viewing each screen) or by entering the name of (or some appropriate mnemonic for) the menu to which the user wishes to go (e.g., type "select city" to go directly to that menu). When typing ahead, if some punctuation other than spacing is needed to separate the entries, a single, standard symbol should be used throughout (e.g., /).[31,42]

Comment: If the user is allowed to directly enter the menu name (or some short form thereof), it might be a good idea to have an intelligent system that can deal with spelling errors by either accepting "reasonable" alternatives to the correct spelling and/or by learning the user's idiosyncracies and accepting those on subsequent attempts.

Question and Answer Dialogue

DEFINITION:

A question and answer dialogue involves a computer-initiated sequence of transactions between the user and the system that provides explicit prompting in performing task and control activities.[32]

472. WHEN TO USE:

Consider a question and answer dialogue for routine data entry tasks, where data items are known and their ordering can be constrained, where users will have little or no training, and where computer response is expected to be moderately fast.[42]

473. NUMBER OF QUESTIONS TO BE DISPLAYED SIMULTANEOUSLY:

In a question and answer dialogue, display each question separately; do not require the user to answer several questions at once.[42]

474. WHEN A SERIES OF QUESTIONS IS INTERRELATED:

When a series of computer posed questions is interrelated, display answers to previous questions when those will provide context to help a user answer the current question.[42]

475. SPACE FOR ANSWERING THE QUESTION, AND CURSOR LOCATION:

Space for answering the question should be provided closely following the question mark. Exception: When additional information needed for the answer is provided following the question, the answer space should follow that additional information. In either case, the cursor should be placed at the start of the answer area.[32]

476. CONTEXTUAL INFORMATION FOR ANSWERING A QUESTION:

The system should provide the user with contextual information required for answering the question (e.g., if the answer must be a gap, the question should be followed by "ft"). The answer area should follow the contextual information.[32]

477. FEEDBACK FOR COMMANDS:

When a question and answer dialogue is used to communicate commands and the completion of the action commanded has a result that is visible to the user, that result is sufficient feedback to the user. If the completion of the action has no visible result, feedback should be provided by a message in a message area.[32]

478. TRANSACTION TITLE:

There should always be a transaction title on the screen (e.g., INPUT DESTINATION). If appropriate to provide context, use subtitles also.[31]

479. GRAMMATICAL FORM FOR QUESTIONS:

Questions should be stated in a consistent grammatical form (e.g., do not say "Your destination" at one point and "Enter your destination" at another).[31]

480. USE OF NEGATIVES IN QUESTIONS:

Negatives should be avoided in questions (e.g., do not say "Which sites do you not want to visit?").[31]

481. DISTINGUISHING AMONG DISPLAYED INFORMATION:

Visual cues and white space should be used to distinguish questions, prompts, instructions, and user inputs.[31] **(See figure 34).**

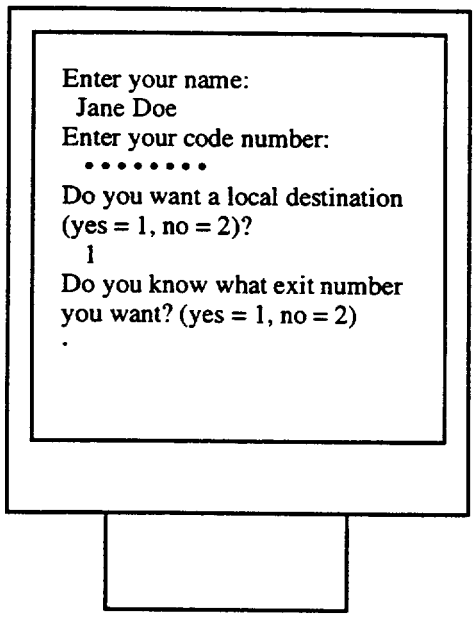

Poor interface: Questions, prompts, and user inputs not clearly separated.

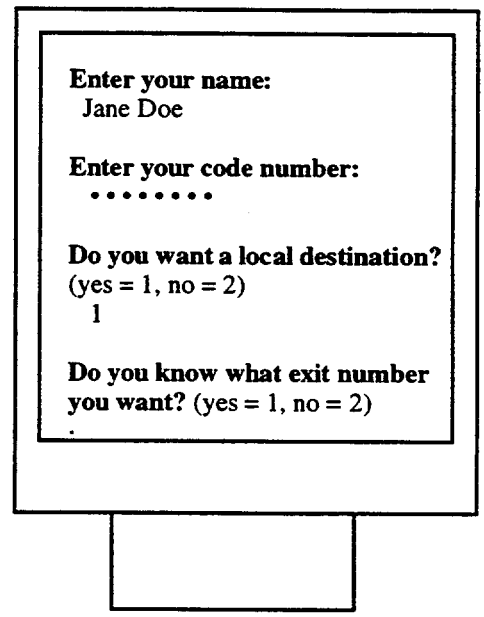

Improved interface: White space and visual cues used to separate questions and prompts from each other and from user inputs.

Figure 34. Use of white space and visual cues to distinguish questions and prompts.

482. NUMBER OF CONTROL ACTIONS TO RESPOND TO A QUESTION:
The number of control actions needed to respond to a question should be minimized (e.g., don't require the user to type "state" when "s" will suffice). (Based on reference 31.)

483. USE OF CAPITAL LETTERS IN USER INPUTS:
The system should not require capital letters unless absolutely necessary (e.g., don't require "S" for state). And, if the user does enter a capital letter where it is not required, the system should accept it (i.e., the system should typically not be case sensitive). (Based on reference 31.)

System Responsiveness

484. RESPONSE TIME SPECIFICATIONS:
Response times for various tasks should conform to the specifications shown in table 34. (See references 13,31,32,42,64.)

Table 34. System response times.

Activity	Maximum Response Time	Optimum Response Time
From key depression until a positive response (e.g., key click)	.1 s	Instantaneous to .1 s
From key depression until appearance of the appropriate character	.2 s	–
System activation	3 s	.5 to 1 s
Error feedback following completion of user input	2 to 4 s	.25 to 1 s[1]
Request for simple service (e.g., a routine, single-step operation, such as a request for a page from a menu)	2 s	.25 to .5 s
Request for the next page in a multipage document	.5 to 1 s	.25 to .5 s
Request to scan a page	–	.5 s
Request for complex service (where a number of operations must be performed)	5 s	2 s
Request to load a program or restart	15 to 60 s	<30 s
Response to a simple status inquiry (e.g., request one category of information about an unambiguously identified object)	2 s	.25 s

(Table continued on next page.)

[1] For type-ahead entries with experienced users, error messages should be displayed as quickly as possible.[42]

Table 34. System response times (continued).

Activity	Maximum Response Time	Optimum Response Time
Response to a complex inquiry in table form (i.e., a request that requires collecting and displaying data on the basis of logical relationships among categories)	2 to 4 s	.25 s
Request for information on the next procedure (i.e., the user is in a conversational interaction with the system, requesting the next in a computer aided or guided task)	<5 s	2 s

485. RESPONSE TO USER CONTROL ACTIONS:
The computer should acknowledge every control action immediately; for every action by the user there should be some apparent reaction from the system.[42]

486. RESPONSE TIME VARIABILITY:
Variability of response times should be kept to a minimum. Total response time deviation should not exceed 50 percent of the mean response time (e.g., if the mean response time is 4 s, the total variation should be limited to 2 s, thus producing a range of response times of 3 to 5 s).[32]

Error Handling

487. ERROR MESSAGE CONTENT:
When the computer detects an entry error, display an error message to the user stating what is wrong and what can be done about it (e.g., say "Code format not recognized; enter two letters followed by three digits" rather than "Invalid input"). Error messages should be specific and understandable (e.g., say "Maximum trip length is 500 miles" rather than "Invalid entry").[31,42]

488. ERROR MESSAGE WHEN A SMALL SET OF ALTERNATIVES IS AVAILABLE:
If an entry must be made from a small set of alternatives, an error message that is displayed in response to a wrong entry should indicate the correct alternatives.[42]

489. TONE OF ERROR MESSAGES:
Wording for error messages should be neutral. Do not imply that the

user is to blame, or personalize the computer, or attempt to make the message humorous (e.g., say "Entry must be a number" rather than "Sorry, I can't accept a nonnumeric entry").[42]

490. WHEN MULTIPLE ERRORS ARE DETECTED:
When multiple errors are detected in a combined user entry, the user should be notified that multiple errors have been found. The complete error messages can then be displayed independently.[42]

491. TIMING OF ERROR MESSAGES:
The computer should display an error message only after a user has completed the entry.[42]

492. CURSOR POSITIONING FOLLOWING AN ERROR:
In addition to providing an error message, the cursor should be positioned at the point of the error and the error highlighted.[31,42]

493. WHAT TO DISPLAY FOLLOWING AN ERROR:
When an entry error has been detected, continue to display the erroneous entry as well as the error message, until the correction is made.[42]

494. USER REQUIREMENT IN ERROR CORRECTION:
Following error detection, require the user to re-enter only that portion of the entry that is not correct.[42]

495. REMOVING AN ERROR MESSAGE:
After the error has been corrected, the error message should be removed. Do not continue to display a message that is no longer applicable.[42]

496. USE OF EXCLAMATION POINTS IN ERROR MESSAGES:
Error messages should not contain exclamation points (e.g., do not say "Maximum trip length is 500 miles!").[31]

497. USE OF HOSTILE WORDS:
Error messages should not contain hostile and/or violent words (e.g., "Fatal error," "Process killed").[31]

Chapter 10. Operational Guidelines

In this chapter are operational guidelines for the automated highway system. They were derived from two main sources:

- Comparable system analysis (task C of the contract) done on three existing, mature systems that are functionally related to the visions of the automated highway system developed under this contract.[4,6] The objective of the analyses was to extract issues and design considerations from the existing systems and to apply them to the design of the AHS.
- Experimental analyses of several questions of importance to the design of the AHS. In all, 14 experiments were conducted.

A Cautionary Note

It is to be stressed that for all their rigor, the comparable systems analyses and the experiments necessarily provided only first looks at extremely complex human factors issues of relevance to the design of the automated highway system. The guidelines presented in this chapter are, therefore, to be considered as preliminary, being based on only relatively limited information. Further research, both analytical and experimental, is needed to verify the accuracy of these guidelines and to provide additional guidelines related to the large number of human factors questions that have yet to be investigated.

The Operational Guidelines

498. IF THE DRIVER DISREGARDS AN ALARM:

Stop a vehicle if an alarm to which the driver must respond is disregarded.[6]

Comment: Depending upon the nature of the alarm, it may be that the driver will be given more than one opportunity to respond. Failure to respond according to some criterion could mean that the driver is incapacitated; in any case, a controlled vehicle-stopping and shut-down in a safe area, with perhaps an automated call by the AHS to a central emergency number, seems a reasonable safety precaution.

499. IF THE DRIVER MUST ACCURATELY POSITION THE VEHICLE:

If drivers must accurately position their vehicles when entering the system or during check-in, use a guide line painted on the roadway or an in-vehicle display that graphically depicts vehicle position relative to a reference point.[6]

Comment: Providing visual support for desired vehicle control movements should make the driver's task easier and improve throughput.

500. DRIVER STEERING WHEN UNDER AUTOMATED CONTROL:

Don't let drivers steer when under automated control.[6]

Comment: Allowing such actions may confuse the driver concerning whether the driver or the automation is in control of the vehicle, and could be extremely dangerous. It is assumed that most people have not driven any vehicle at speeds they might encounter on the AHS (e.g., 144.8+ km/h [90+ mi/h]), and thus are not familiar with how their vehicles will react under those conditions. The possibility of an oversteering response by the driver seems very real, and thus allowing drivers to steer at high speeds is discouraged.

501. TRANSFERRING CONTROL TO THE AUTOMATION:

When a transition lane is used, transfer of control to the automation should not be attempted until the vehicle is stable in the transition lane and the driver is no longer preoccupied with entry tasks.[6]

Comment: The driver's workload should be kept to a minimum and the driver should be ready to concentrate on the control transfer before it is started.

502. PREVENTING UNWANTED TRANSFER OF CONTROL TO THE AUTOMATION:

Establish mechanical restrictions to guard against control transfer until the driver is prepared to initiate it.[6]

Comment: Although there does not appear to be a safety issue here, driver acceptance of the automation and satisfaction with the AHS in general may be better if the driver retains control until he/she indicates an explicit willingness to relinquish it. Note that with a segregated automated lane, entry into the check-in area may be seen as an expression of such willingness, so that the system can take control without further driver intervention if the vehicle passes the inspection.

503. MANUAL LANE CHANGES:

When the driver must change lanes manually, implement the lane change in one of the following ways:

a. **Disengage the automated steering, manually change lanes, and manually re-engage the automated steering when the lane change has been completed and the vehicle is stable in the new lane.**

b. **Disengage the automated steering and manually change lanes; automatically re-engage the automated steering when the vehicle is stable in the new lane.**[6]

Comment: One method specifically being avoided is where the system resumes automated control when the vehicle simply crosses into the new lane. The concern is that if the driver approaches the new lane at too high an angle (where 0° is straight ahead and 90° is directly to the left or right, depending upon the direction of the lane change), the torque exerted by the automation to straighten out the vehicle in the new lane could cause a driver injury.

Also, note that appropriate provision will have to be made for the driver who initiates a lane change and then decides to not complete it, returning to the lane from which he/she came.

504. CRITICAL SAFETY SYSTEMS AND FALSE ALARMS:

If critical vehicle safety systems are prone to false alarms under certain conditions, automatically inhibit the warnings under those conditions.(6)

Comment: The indication from other systems is that continued false alarms lead the users to disregard the alarm, even when it is real, or to disconnect the alarm. Both consequences are clearly to be avoided.

505. DISENGAGING THE AUTOMATION IN AN EMERGENCY:

In a free agent scenario, provide alternative means for quickly disengaging the automation during critical emergencies.(6)

Comment: In a free agent scenario, all automation is placed on the vehicle and there is mixed automated and manual traffic in all lanes.

Relying on the inexperienced driver to remember one specific action for taking control under emergency conditions may not be the best approach for the AHS.

506. ALERTING THE DRIVER THAT THE AHS ROADWAY IS ENDING:

Provide attention-getting displays (e.g., rumble strips) for areas where an AHS-equipped segment of roadway ends.(6)

Comment: These types of displays are already in use at the entrances to many toll booth areas and help to capture the attention of the inattentive driver. On the AHS, in-vehicle displays (e.g., auditory alarms) should also be used to ensure that the driver is alert to the situation.

507. USE OF A BACKUP DISPLAY IN THE VEHICLE:

Provide a display in the vehicle that is at least partially redundant that can be used in case the primary visual display fails.(65)

Comment: If there are multiple display surfaces as part of the normal AHS in-vehicle interface, the backup display need not be an additional display surface. Rather, it could be one of the existing display surfaces tasked differently under failure conditions.

508. BETWEEN-VEHICLES GAPS IN STRINGS OF VEHICLES:

Based on driver preferences, if there are strings of vehicles in the automated lane, and the designated speed in that lane is ≥104.7 km/h (≥65 mi/h), provide gaps between vehicles within a string of more than 0.0625 s. (Based on reference 66.)

Comment: In the experiment referenced, drivers indicated a preference for the longer gaps when gaps of 0.0625 s, 0.25 s, and 1.0 s were used. The result can be taken to indicate their dislike of the shortest gap, but cannot be used to determine what minimum gap drivers would find acceptable.

Note that the guideline is based on driver preferences. Other factors such as safety and system performance may lead to a different guideline.

509. SPEEDS OF VEHICLES ENTERING THE AUTOMATED LANE:

If the automated lane is reserved for vehicles traveling under automated control, vehicles entering that lane should be traveling at the same speed as vehicles already in the automated lane. (Based on references 67,68.)

Table 35 shows example acceleration-ramp lengths for three vehicles.[69]

Comment: Analyses indicated that when the automated-lane speed is 104.7 km/h through 153.0 km/h (65 mi/h through 95 mi/h) and the entering vehicle starts at 88.5 km/h (55 mi/h), throughput in the automated lane increases as the difference in speed between vehicles entering the lane and vehicles already in the lane decreases. Additional speeds were analyzed in determining ramp lengths because it is not clear at this time what the designated AHS speed is likely to be.

Table 35. Acceleration distances for three vehicle types.[1]

Automated-Lane Speed, km/h (mi/h)	Vehicle Type: A Vehicle That Accelerates from 0 km/h to 96.6 km/h (60 mi/h) in 10 s	A Vehicle That Accelerates from 0 km/h to 96.6 km/h (60 mi/h) in 15 s	A 12,712-kg (28,000-lb) Gross Weight Truck
48.3 (30)	34 (112)	48 (158)	121 (398)
64.4 (40)	59 (195)	85 (279)	222 (728)
80.5 (50)	92 (303)	135 (444)	360 (1180)
96.6 (60)	134 (440)	201 (659)	543 (1781)
112.7 (70)	185 (607)	290 (951)	783 (2568)
128.8 (80)	246 (807)	403 (1322)	1099 (3605)
144.9 (90)	318 (1043)	545 (1788)	1518 (4979)

[1] Shown are the distances required for the vehicles to accelerate from 0 km/h to the automated-lane speed. The analyses assumed no rolling resistance, no wind effects, and a level acceleration ramp. All lengths have been rounded to the nearest meter (foot).

510. SPEEDS OF VEHICLES LEAVING THE AUTOMATED LANE:

If the automated lane is reserved for vehicles traveling under automated control, when vehicles leave that lane they should be traveling at the same speed as vehicles in the automated lane. (Based on reference 66.)

Table 36 shows example deceleration-ramp lengths for the same three vehicles that were used for table 35.(69)

Comment: Analyses indicated that when the automated-lane speed is 104.7 km/h through 153.0 km/h (65 mi/h through 95 mi/h) and the leaving vehicle slows to 88.5 km/h (55 mi/h) before it leaves, throughput in the automated lane increases as the difference in speed between vehicles leaving the lane and vehicles already in the lane decreases. Additional speeds were analyzed in determining ramp lengths because it is not clear at this time what the designated AHS speed is likely to be.

511. METHOD OF TRANSFERRING CONTROL FROM THE DRIVER TO THE AHS:

A vehicle's speed and steering should both be under the control of the automation before the vehicle enters the automated lane. Exception: This will not be necessary in a free agent scenario. (Based on references 67,68.)

Comment: In a free agent scenario, all automation is placed on the vehicle and there is mixed automated and manual traffic in all lanes.

When the AHS has complete control of the vehicle before the vehicle enters the automated lane, traffic in that lane is disrupted less than with other transfer-of-control methods. This method can also best be used to ensure that guideline 509 is met.

Table 36. Distances for three vehicle types to decelerate to 0 km/h and 48.3 km/h (30 mi/h).[1]

	Vehicle Type		
Designated AHS Speed, km/h (mi/h)	A Vehicle That Accelerates from 0 km/h to 96.6 km/h (60 mi/h) in 10 s	A Vehicle That Accelerates from 0 km/h to 96.6 km/h (60 mi/h) in 15 s	A 12,712-kg- (28,000-lb-) Gross-Weight Truck
DECELERATING TO 0; COEFFICIENT OF FRICTION = 0.5*			
48.3 (30)	18 (60)	18 (59)	18 (60)
64.4 (40)	32 (105)	31 (102)	32 (106)
80.5 (50)	49 (161)	47 (155)	50 (163)
96.6 (60)	70 (230)	66 (216)	71 (233)
112.7 (70)	93 (305)	87 (285)	95 (312)
128.8 (80)	118 (387)	109 (358)	122 (400)
144.9 (90)	146 (479)	131 (430)	152 (499)
DECELERATING TO 0; COEFFICIENT OF FRICTION = 0.2*			
48.3 (30)	45 (146)	43 (141)	45 (147)
64.4 (40)	77 (252)	73 (238)	78 (257)
80.5 (50)	116 (380)	106 (349)	119 (391)
96.6 (60)	160 (525)	143 (469)	167 (548)
112.7 (70)	208 (682)	180 (590)	219 (718)
128.8 (80)	258 (846)	216 (708)	276 (905)
144.9 (90)	308 (1010)	250 (820)	335 (1099)
DECELERATING TO 48.3 (30); COEFFICIENT OF FRICTION = 0.2*			
48.3 (30)	0 (0)	0 (0)	0 (0)
64.4 (40)	5 (16)	5 (15)	5 (16)
80.5 (50)	19 (61)	17 (56)	19 (63)
96.6 (60)	40 (131)	36 (118)	42 (138)
112.7 (70)	68 (223)	59 (194)	72 (236)
128.8 (80)	101 (331)	84 (276)	108 (354)
144.9 (90)	138 (453)	111 (364)	149 (489)

[1] Shown are the distances required for the vehicles to decelerate from the designated AHS speed to the speed indicated. The analyses assumed no rolling resistance, no wind effects, and a level deceleration ramp. All lengths have been rounded to the nearest meter (foot). In cases where conversions for two different (rounded) numbers led to the same (rounded) result, both results have been left in the table. For example, 15.7 ft rounds to 16 ft, and is then converted to 4.88 m, which is shown in the table as 5 m; 14.9 ft rounds to 15 ft, and is then converted to 4.58 m, which is also shown in the table as 5 m. This was believed preferable to showing decimal distances, which are of little practical value.

* The larger the coefficient of friction, the better the stopping performance. A coefficient of friction of 0.5 represents a nearly emergency stop; a coefficient of 0.2 represents a lower-*g* stop, which may be more realistic for normal exiting of the AHS.

512. AUTOMATED-LANE WIDTH:

If the designated speed in the automated lane is ≥128.8 km/h (≥80 mi/h) and the driver may have to take control of either steering alone or both speed and steering, the automated lane should not be less than 3.7 m (12 ft) wide. (Based on reference 70.)

Comment: In the referenced experiment, some drivers got back control of steering alone and others got back control of both steering and speed just before a curve to the left. At the end of the curve, the right edge of the driver's vehicle was very close to the right edge of the lane—about 0.4 m (1.3 ft) when the driver got control of steering alone, and about 0.1 m (0.3 ft) when the driver got control of both steering and speed.

513. USE OF SIMPLE BARRIERS TO SEGREGATE MANUAL AND AUTOMATED VEHICLES:

When vehicles must travel between manual and automated lanes, the use of a simple barrier-gap-barrier arrangement is not recommended for segregating manual and automated traffic. (Based on reference 71.)

Comment: Table 37 shows the minimum gaps between barriers that will allow vehicles traveling under automated control under ideal conditions to pass through. Of course, larger gaps would be used on an actual AHS to allow for worst case conditions.

In one of the experiments conducted for this contract, drivers in manual control of their vehicles and traveling at 104.7 km/h (65 mi/h) took an average of 1.25 s to complete a lane change.[67] This converts to 36.3 m (119 ft). Comparing this to the minimum best-case gap at that speed—1.5 times the value in table 37, or 114.5 m (375 ft)—it is apparent that a determined driver traveling under manual control could enter the automated lane without authorization by driving through a gap between barriers. If the driver were to slow down, he/she would have an even easier time getting through a gap. Thus, it is concluded that a simple arrangement of barrier-gap-barrier will not prevent unauthorized drivers from entering the automated lane.

Table 37. Between-barriers gap sizes to allow vehicles traveling under automated control under ideal conditions to pass through.[1,2]

Vehicle Speed When Passing Between Lanes	Minimum Gap Size
88.6 km/h (55 mi/h)	64 m (211 ft)
104.7 km/h (65 mi/h)	76 m (250 ft)
120.8 km/h (75 mi/h)	87 m (286 ft)
153.0 km/h (95 mi/h)	110 m (361 ft)

[1] A perfect car wheel angle and a dry, 3.7-m- (12-ft-) wide roadway were assumed.
[2] As a safety margin, the actual gaps used on a real automated highway system would be at least 1.5 times the minimum gaps determined.

514. METHOD OF TRANSFERRING CONTROL FROM THE AHS TO THE DRIVER:

When transferring control from the AHS to the driver, allow the driver to either take control of steering first followed by speed or of both speed and steering simultaneously. Do not transfer control of speed first followed by steering. (Based on reference 72.)

Comment: In the referenced experiment, three different transfer methods were used. Performance did not differ among the three methods, but drivers showed a preference **against** the speed-first-followed-by-steering method.

Appendix A. Controls Included In The Handbook

To tailor the handbook to the requirements of the automated highway system, candidate controls were rated based on several tradeoff factors chosen because of their importance to control use on the AHS. Tradeoff factors were each written as binary choices, and each control was rated on each factor. Having no good basis for assigning weights to the tradeoff factors, they were all weighted equally. Thus, the score for each control was simply the sum of the unweighted ratings on the various tradeoff factors. Also, it should be noted that cost was not used to rate the controls. Although cost is clearly an important consideration, deciding how to use it as an evaluation factor was not clear. It may be that cost should be an initial filter through which a control type must pass to merit further consideration, or a final filter to decide between otherwise "equal" choices, but what cost cutoff should be used in any case was not obvious.

Evaluation Factors

The following factors were used to evaluate controls:

- Will the amount of vibration encountered inside an automobile traveling at highway speeds on a reasonably maintained concrete or asphalt roadway have a negative effect on the usability of the control?
- Can the control be used with (relatively) equal facility if the user moves around within the workspace?
- How much space is required for the control, relative to the other controls being rated?
- Is the control operable over the anticipated temperature range that might be encountered in the AHS environment? This was taken to be approximately -34.4 °C to +54.4 °C (-30 °F to +130 °F).
- Does the position of the control indicate its state (e.g., ON vs. OFF) and/or the state of the controlled function?
- Can the control be used effectively in ambient noise conditions with randomly occurring noise disturbances?
- Is the use of the control negatively affected by modest amounts of dirt, grease (including that from the oils in the user's fingers), etc.?
- Can the control be used if the user's hands are otherwise occupied?

Controls Rated

The following controls were rated on the factors stated above:

- Continuous controls:
  - Joystick.
  - Knob.
  - Mouse.

  - Pedal.
  - Slide.
  - Thumbwheel.
  - Trackball.
- Discrete controls:
  - Foot pushbutton.
  - Keyboard.
  - Knob.
  - Legend switch.
  - Lever.
  - Light pen.
  - Low resistance/low travel switch.
  - Pushbuttons: alternate action, single button; alternate action, two button interlocked; momentary contact; reconfigurable; single action.
  - Rocker.
  - Rotary selector.
  - Thumbwheel.
  - Touch screen.
  - Toggle.
  - Voice recognition.
- Security devices:
  - Card reader.
  - Cipher lock.
  - Key operated switch.

The Ratings and Final Controls Selection

The ratings for each of the controls stated above against each of the evaluation criteria are shown in table 38. To decide which controls to include in the handbook based on the ratings, it was necessary to determine a cutoff score below which a control would be eliminated from further consideration. There was no a priori basis for determining that score. Thus, the final selection was made after examination of the scores and discussion among the authors and other human factors professionals at the authors' place of business. On that basis, it was decided that only controls with an unweighted score of six would be included in the handbook, with the exceptions noted below. Those controls are as follows:

- Foot pushbutton.
- Joystick (isometric and isotonic).
- Key operated switch.

Table 38. Controls tradeoffs.

	Usability Under Vibration Conditions[1]	Usability from Multiple Locations	Space Required	Operability Over Temperature Range[2]	Has Built-in Display Properties?	Usability in Noise	Susceptibility to Dirt, Grease, Etc.	Allows Hands-Free Use?	SCORE	Comment Key
	Poor = 0 Good = 1	Poor = 0 Good = 1	A lot = 0 A little = 1	Poor = 0 Good = 1	No = 0 Yes = 1	Poor = 0 Good = 1	High = 0 Normal = 1	No = 0 Yes = 1		
CONTINUOUS										
Joystick	1	0	1	1	1	1	1	0	**6**	a
Knob	1	0	1	1	0	1	1	0	**5**	
Mouse	1	0	1	1	0	1	0	0	**4**	
Pedal	1	0	0	1	0	1	1	1	**5**	
Slide	1	0	1	1	1	1	1	0	**6**	
Thumb wheel	1	0	1	1	0	1	1	0	**5**	
Trackball	1	0	1	1	0	1	1	0	**5**	
DISCRETE										
Foot pushbutton	1	0	1	1	0	1	1	1	**6**	
Keyboard	1	0	0	1	0	1	1	0	**4**	b
Knob	1	0	1	1	1	1	1	0	**6**	
Legend switch	1	0	1	1	1	1	1	0	**6**	d
Lever	1	0	0	1	1	1	1	0	**5**	e
Light pen	0	0	0	1	0	1	0	0	**2**	h
Low resistance/low travel switch	1	0	1	1	0	1	1	0	**5**	i *(Table continued on next page.)*

1 "Vibration conditions" means those normally encountered inside an automobile traveling at highway speeds on a reasonably maintained concrete or asphalt roadway. This was a purely subjective judgement: no attempt was made to determine the frequencies and/or amplitudes of vibration encountered.

2 The anticipated temperature range is approximately -34.4 °C to +54.4 °C (–30 °F to +130 °F).

Table 38. Controls tradeoffs (continued).

	Usability Under Vibration Conditions[1]	Usability from Multiple Locations	Space Required	Operability Over Temperature Range[2]	Has Built-in Display Properties?	Usability in Noise	Susceptibility to Dirt, Grease, Etc.	Allows Hands-Free Use?	SCORE	Comment Key
	Poor = 0 Good = 1	Poor = 0 Good = 1	A lot = 0 A little = 1	Poor = 0 Good = 1	No = 0 Yes = 1	Poor = 0 Good = 1	High = 0 Normal = 1	No = 0 Yes = 1		
DISCRETE (CONTINUED)										
Pushbutton, alternate action, single button	1	0	1	1	0	1	1	0	**5**	
Pushbutton, alternate action, two button interlocked	1	0	1	1	1	1	1	0	**6**	
Pushbutton, momentary contact	1	0	1	1	0	1	1	0	**5**	
Pushbutton, reconfig-urable	1	0	1	1	1	1	1	0	**6**	
Pushbutton, single action	1	0	1	1	0	1	1	0	**5**	
Rocker	1	0	1	1	1	1	1	0	**6**	f
Rotary selector	1	0	1	1	1	1	1	0	**6**	
Thumb wheel	1	0	1	1	0	1	1	0	**5**	
Touch screen	1	0	1	1	0	1	0	1	**5**	
Toggle	1	0	1	1	1	1	1	0	**6**	g *(Table continued on next page.)*

Table 38. Controls tradeoffs (continued).

	Usability Under Vibration Conditions[1]	Usability from Multiple Locations	Space Required	Operability Over Temperature Range[2]	Has Built-in Display Properties?	Usability in Noise	Susceptibility to Dirt, Grease, Etc.	Allows Hands-Free Use?	SCORE	Comment Key
	Poor = 0 Good = 1	Poor = 0 Good = 1	A lot = 0 A little = 1	Poor = 0 Good = 1	No = 0 Yes = 1	Poor = 0 Good = 1	High = 0 Normal = 1	No = 0 Yes = 1		
DISCRETE (CONTINUED)										
Voice recognition	1	1	1	1	0	0	1	1	**6**	c
SECURITY DEVICES										
Card reader	1	0	1	1	0	1	1	0	**5**	
Cipher lock	1	0	0	1	0	1	1	0	**4**	
Key operated switch	1	0	1	1	1	1	1	0	**6**	

Comments:

[a] Joysticks that do not return to center have built in display properties.

[b] It is assumed that sealed keyboards can be used to keep out dirt, etc.

[c] With respect to usability in noise, what is assumed is unwanted noises present at random times, rather than a constant noise background.

[d] A legend switch has a legend on its front face that is illuminated when the function is actuated; it is visible but not illuminated when the function is not actuated.

[e] Ability to tell what function has been actuated based on position alone (built in display) may depend on total number of lever positions and/or distance between positions.

[f] Rocker switches that do not return to center have built in display properties.

[g] Toggle switches that do not return to center have built in display properties.

[h] Off axis approach to the touch area may lead to reading and pointing errors.

[i] Very susceptible to accidental actuation.

- Knob (continuous).
- Legend switch.
- Pushbutton (momentary action, alternate action, and reconfigurable).
- Rocker switch.
- Rotary selector.
- Slide switch.
- Toggle switch.
- Voice recognition.

Note that the continuous knob has been included instead of the discrete knob, although the latter had a score of five and the former had a score of six. It is believed that the continuous knob is more likely to be used as part of the in-vehicle AHS interface (e.g., for brightness control on a visual display, for volume control on an auditory display) than will the discrete knob, which is used for push-pull functions (e.g., a headlight switch). In addition, guidelines have been provided for touch screens, even though they scored fairly poorly on the tradeoffs. An exception was made in this case because touch screens are appealing for a relatively untrained population, and thus may be worth considering for reasons that are not necessarily reflected in the tradeoffs.

When to Use Each Control

To help determine which control to use in a particular situation, the information in tables 39 and 40 is provided. Table 39 tells when to use each of the controls, and table 40 provides priority rankings for some of the controls. Priority rankings were not available for all the controls selected for inclusion in the handbook.

Table 39. Controls: when to use.[1]

Control	When to Use
Foot pushbutton	Foot pushbuttons should be used only in those cases where the user is likely to have both hands occupied at the time the pushbutton is actuated, or where load-sharing among limbs is desirable. Because they are susceptible to accidental actuation, limit their uses to non-critical or infrequent operations (e.g., press-to-talk communications).
Joystick, isometric (stiff stick, force stick, pressure joystick). This stick does not move in response to user commands. The controlled object moves in relation to the amount and direction of force applied to the stick.	Isometric joysticks should be used for applications that require return to center after each entry, in which user feedback is primarily visual from some system response, and where there is minimal delay and tight coupling between control input and system reaction. They should not be used where it is necessary for the user to maintain a constant force on the stick to generate a constant output over a sustained period of time. *(Table continued on next page.)*

[1] Unless otherwise noted, all information is from reference 14.

Table 39. Controls: when to use (continued).

Control	When to Use
Joystick, isotonic (displacement stick). This stick moves in response to user commands. The controlled object moves in relation to the amount and direction of displacement of the stick.	Isotonic joysticks should be used for control of various display functions, such as data pickoff from a cathode ray tube. When used for rate control, the joystick should be spring loaded for return to center when the hand is removed.
Key operated switch	Key operated switches should be used to prevent unauthorized machine operation.[27] They may also be used to provide ON-OFF functions.
Knob (continuous)	Knobs should be used when low forces or precise adjustments of a continuous variable are required.
Legend switch	Legend switches should be used to display qualitative information on an important system status, to reduce the demands for the user to interpret information, and when functional grouping or a matrix of controls and displays is required but space is very limited.
Pushbutton • Momentary contact: for single push-HOLD/release-OFF functions. • Alternate action: the first press sets the switch to ON and a second press sets it to OFF. • Stepping action: successive presses of the switch cycle through three or more states.	Pushbuttons should be used primarily for simple switching between two conditions, selection of alternate ON-OFF functions from an array of related conditions or subsystem functions, release of a locking system (such as on a parking brake), or entry of a discrete control order.
Rocker switch	Rocker switches should be used for functions that require two discrete positions, as an alternate to toggle switches. They should be considered where the toggle switch handle might snag the user's clothing, etc., or where there is insufficient panel space for separate labeling of switch positions. Rocker switches with three positions should be used only where the use of a more suitable three-position switch (see table 40) is not feasible, or where the rocker switch is spring loaded with the center OFF.
Rotary selector	Rotary selectors should be used for discrete functions when three or more detented positions are required. They should not be used for two-position functions unless prompt visual identification is of primary importance and speed of control operation is not critical. *(Table continued on next page.)*

Table 39. Controls: when to use (continued).

Control	When to Use
Slide switch	Slide switches should be used for functions that require two discrete positions. They may also be used for functions that require more discrete positions in which the switches are arranged in a matrix to permit easy recognition of relative switch settings. They should not be used where mispositioning is to be avoided.
Toggle switch	Toggle switches should be used for functions that require two discrete positions or where space limitations are severe. They may also be used for three discrete positions, but a rotary selector is usually preferred for this application (see table 40).
Touch screen	Touch screens should be used when the opportunity for training is low; when targets are large, discrete, and spread out; when frequency of use is low; and when the task requires little or no text input.(31)
Voice recognition	Voice recognition should be used for situations where the user's hands are busy, mobility is required, or the user's eyes are busy.(31)

Table 40. Priority use rankings of controls.(14)[1]

	Function							
Control	Select Power State ON-OFF	Select One of Three States (OFF-STNDBY-ON)	Select One of 3 to 24 Discrete Alterna-tives—Sequential Order	Set Value On a Con-tinuous Scale	Select Value In Discrete Steps	Slew Counters or Other Numeric Readout	Adjust Light or Sound Level—Continu-ous	Two Coordinate Tracking
Joystick								1
Knob				1		1 (rate control)	1	
Pushbut-ton	1				1	1		
Rocker Switch	2	3						
Rotary Selector	3	1	1		1			
Toggle Switch	2	2				1		

[1] Not all controls in the handbook were ranked in the source cited. Information on rankings for other functions can be found in the source cited.

1 = most preferred; 3 = least preferred.

Appendix B. Displays Included in the Handbook

As with controls, it was decided that including guidelines for all possible displays was not reasonable in a handbook that is tailored for the automated highway system. To determine which displays were to be included in the handbook, virtually the same methodology was used as was used for controls. First, a list of the factors relevant to displays use on the AHS was determined. Then, displays were rated on the evaluation factors and a simple score determined for each: unlike with controls, no display types were rejected a priori because of obvious incompatibility with the AHS. Although a weighted score would certainly have been better, there was no obvious basis for assigning realistic weights to the evaluation factors. Also, it should be noted that cost was not used to rate the displays. Although cost is clearly an important consideration, deciding how to use it as an evaluation factor was not clear. It may be that cost should be an initial filter through which a display type must pass to merit further consideration, or a final filter to decide between otherwise "equal" choices, but what cost cutoff should be used in any case was not obvious.

Evaluation Factors

The following factors were used to evaluate displays:

- How well does the display function in a dark environment?
- How well does the display function in a bright environment?
- How well does the display function with high background noise?
- Does the display have the ability to capture the user's attention when he/she is not attending to it?
- Is the ability to get relevant information from the display contingent upon the user being in a particular location?
- Can the user get relevant information from the display if he/she is not looking at it?
- Can the display show graphics?
- Can the display show the same object in multiple colors, i.e., does it have a true color capability?
- How much space is required for the display, relative to the other displays being rated?
- Is the display operable over the anticipated temperature range that might be encountered in the AHS environment? This was taken to be approximately -34.4 °C to +54.4 °C (-30 °F to +130 °F).
- Does the display allow information to be shown in different ways (e.g., in different locations on its "face")?

Displays Rated

The following displays were rated on the factors stated above:

- Analog/mechanical (e.g., gauges).
- Cathode ray tube.
- Counter/mechanical.
- Electroluminescent.
- Head-up display (where a particular technology was assumed to provide the imagery).
- Incandescent light.
- Light-emitting diode:
  - Simple indicator.
  - Segmented characters.
  - Matrix addressed.
- Liquid crystal display:
  - Reflective, segmented characters.
  - Reflective, matrix addressed.
  - Transflective: segmented characters.
  - Transflective: matrix addressed.
  - Transmissive: segmented characters.
  - Transmissive: matrix addressed.
- Plasma:
  - Segmented characters.
  - Matrix addressed.
- Speech.
- Simple tone.
- Vibration.
- Vacuum fluorescent display:
  - Segmented characters.
  - Matrix addressed.

The Ratings and Final Displays Selection

The ratings for each display stated above against each of the evaluation criteria are shown in table 41. To decide which displays to include in the handbook based on the ratings, it was necessary to determine a cutoff score below which a display would be eliminated from further consideration. There was no a priori basis for determining that score. Thus, the final selection was made after examination of the scores and discussion

Table 41. Displays tradeoffs.

	Salience in Low Ambient Illumination	Salience in High Ambient Illumination	Salience in High Ambient Noise	Attention-Getting Properties	Visbility From Multiple Locations	Usable With Eyes Busy?	Displays Graphics?	Displays Same Object in Multiple Colors?	Space Required	Operability Over Temperature Range[1]	Flexible Formatting?	SCORE	Comment Key
	Poor = 0 Good = 1	Poor = 0 Good = 1	Poor = 0 Good = 1	Poor = 0 Good = 1	Poor = 0 Good = 1	No = 0 Yes = 1	No = 0 Yes = 1	No = 0 Yes = 1	High = 0 Low = 1	Poor = 0 Good = 1	No = 0 Yes = 1		
Analog[2]	1	1	1	0	1	0	0	0	1	1	0	**6**	a, e
CRT[3]	1	0	1	0	1	0	1	1	0	1	1	**7**	h, i
Counter[2]	1	1	1	0	1	0	0	0	1	1	0	**6**	a
EL[4]	1	0	1	0	1	0	1	0	1	0	1	**6**	i, j
Head-Up Display[5]	1	1	1	0	0	1	1	0	0	1	1	**7**	b, c, d, g, i
Incandescent Light	1	0	1	0	1	0	0	0	1	1	0	**5**	
LED[6]: Simple Indicator	1	0	1	0	1	0	0	0	1	1	0	**5**	
LED[6]: Segmented Characters	1	0	1	0	1	0	0	0	1	1	0	**5** *(Table continued on next page.)*	

1 The anticipated temperature range is approximately -34.4 °C to +54.4 °C (-30 °F to +130 °F).
2 Mechanical (not including electronic representations).
3 CRT = cathode ray tube.
4 EL = electroluminescent. A matrix addressed display is assumed.
5 Assumes a monochromatic, stroke cathode ray tube or vacuum fluorescent image source, and includes both refractive and holographic optics.
6 LED = light-emitting diode.

Table 41. Displays tradeoffs (continued).

	Salience in Low Ambient Illumination	Salience in High Ambient Illumination	Salience in High Ambient Noise	Attention-Getting Properties	Visbility From Multiple Locations	Usable With Eyes Busy?	Displays Graphics?	Displays Same Object in Multiple Colors?	Space Required	Operability Over Temperature Range[1]	Flexible Formatting?	SCORE	Comment Key
	Poor = 0 Good = 1	Poor = 0 Good = 1	Poor = 0 Good = 1	Poor = 0 Good = 1	Poor = 0 Good = 1	No = 0 Yes = 1	No = 0 Yes = 1	No = 0 Yes = 1	High = 0 Low = 1	Poor = 0 Good = 1	No = 0 Yes = 1		
LED[6]: Matrix Addressed Display	1	0	1	0	1	0	1	1	1	1	1	**8**	
LCD[7], Reflective: Segmented Characters	0	1	1	0	1	0	0	0	1	1	0	**5**	i, j
LCD[7], Reflective: Matrix Addressed Display	0	1	1	0	0	0	1	0	1	0	1	**5**	i, j
LCD[7], Transflective: Segmented Characters[8]	1	1	1	0	1	0	0	0	1	1	0	**6** *(Table continued on next page.)*	a, i, j

[7] LCD = liquid crystal display.
[8] Assumes incandescent, electroluminescent, or fluorescent edge lighting.

Table 41. Displays tradeoffs (continued).

	Salience in Low Ambient Illumination	Salience in High Ambient Illumination	Salience in High Ambient Noise	Attention - Getting Properties	Visbility From Multiple Locations	Usable With Eyes Busy?	Displays Graphics?	Displays Same Object in Multiple Colors?	Space Required	Operability Over Temperature Range[1]	Flexible Formatting?	SCORE	Comment Key
	Poor = 0 Good = 1	Poor = 0 Good = 1	Poor = 0 Good = 1	Poor = 0 Good = 1	Poor = 0 Good = 1	No = 0 Yes = 1	No = 0 Yes = 1	No = 0 Yes = 1	High = 0 Low = 1	Poor = 0 Good = 1	No = 0 Yes = 1		
LCD[7], Transflective: Matrix Addressed Display[8]	1	1	1	0	0	0	1	0	1	0	1	**6**	a, i, j
LCD[7], Transmissive: Segmented Characters[9]	1	0	1	0	0	0	0	0	1	1	0	**4**	a, i, j
LCD[7], Transmissive: Matrix Addressed Display[9]	1	0	1	0	0	0	1	1	1	0	1	**6**	a, i, j
Plasma: Segmented Characters	1	0	1	0	1	0	0	0	1	0	0	**4** *(Table continued on next page.)*	i, j

[9] Assumes electroluminescent or fluorescent back lighting.

Table 41. Displays tradeoffs (continued).

	Salience in Low Ambient Illumination	Salience in High Ambient Illumination	Salience in High Ambient Noise	Attention - Getting Properties	Visbility From Multiple Locations	Usable With Eyes Busy?	Displays Graphics?	Displays Same Object in Multiple Colors?	Space Required	Operability Over Temperature Range[1]	Flexible Formatting?	SCORE	Comment Key
	Poor = 0 Good = 1	Poor = 0 Good = 1	Poor = 0 Good = 1	Poor = 0 Good = 1	Poor = 0 Good = 1	No = 0 Yes = 1	No = 0 Yes = 1	No = 0 Yes = 1	High = 0 Low = 1	Poor = 0 Good = 1	No = 0 Yes = 1		
Plasma: Matrix Addressed Display	1	0	1	0	1	0	1	0	1	0	1	**6**	i, j
Speech	1	1	0	1	1	1	0	0	1	1	1	**8**	f
Tone	1	1	0	1	1	1	0	0	1	1	1	**8**	f
Vibration	1	1	1	1	0	1	0	0	0	1	0	**6**	
VFD[10]: Segmented Characters	1	1	1	0	1	0	0	0	1	1	0	**6**	i
VFD[10]: Matrix Addressed Display	1	1	1	0	1	0	1	0	1	1	1	**8** *(Table continued on next page.)*	i

[10] VFD = vacuum fluorescent display.

Comments

[a] Assumes backlighting or transillumination.
[b] Assumes stroke or matrix addressed imagery (raster imagery will have poor visibility in high ambient illumination).
[c] Allows "eyes busy" use if the competing visual task involves the forward visual scene.
[d] Color is possible, but not at adequate contrast levels.

Table 41. Displays tradeoffs (continued).

[e] Check reading may be done from multiple locations, even with relatively small characters.
[f] Ability to hear easily from multiple locations depends upon signal-to-noise ratio, competing speech tasks, and speaker (hardware) locations.
[g] Downrated on space required due to projection optics.
[h] Downrated on space required due to cathode ray tube depth.
[i] Contrast enhancement filters can improve visibility in high ambient illumination, but may degrade image quality.
[j] An independent heating/cooling source can be added to improve operability under extreme temperatures.

among the authors and other human factors professionals at the authors' place of business. On that basis, it was decided that only displays with an unweighted score of six or above would be included in the handbook, with the exceptions noted below. Those displays are as follows:

- Analog/mechanical.
- Cathode ray tube.
- Counter/mechanical.
- Electroluminescent.
- Head-up display.
- Light-emitting diode, matrix addressed.
- Liquid crystal display:
  - Transflective, segmented characters.
  - Transflective, matrix addressed.
  - Transmissive, matrix addressed.
- Plasma, matrix addressed.
- Speech.
- Nonspeech auditory.
- Vacuum fluorescent display:
  - Segmented characters.
  - Matrix addressed.

In addition, it was decided to add simple indicator lights—incandescent and light-emitting diode—to the list. Given that simple indicators are used in a wide variety of applications, it was thought that there was a high likelihood they might be useful for the AHS in-vehicle interface.

Vibration, which had a score of six, was not included in the handbook for lack of appropriate information with which to provide guidelines.

When to Use Each Display

To help determine which display type to use in a particular situation, the information in table 42 is provided.

Table 42. Displays: when to use.

Display	When to Use
Analog/mechanical	Analog indicators should be used in preference to digital readouts when the data displayed are of qualitative as well as quantitative value (when trends, direction of movement, and more-than–less-than relationships are of value as well as the specific numeric value), or of qualitative value only. They should not be used when the primary purpose is readout of precise quantitative information.
Cathode ray tube (CRT)	Cathode ray tubes should be used for text and graphics applications where display visibility from multiple viewer positions, high display brightness, high display mean time between failures, high display resolution, and a large range of display colors are more important than the display power consumption and physical display volume. Stroke written CRT's should be selected over raster CRT's when high symbol luminance is more important than the need to display filled or shaded objects and backgrounds.
Counter/mechanical	Mechanical counters should be used for presenting large ranges of quantitative data when users must make quick, precise readings but need not keep track of continuous trends.
Electroluminescent (EL)	Matrix-addressed EL displays should be used for graphics applications where display visibility from multiple viewer positions, high display uniformity, high display resolution, low physical display volume, and low power consumption are more important than the display of high brightness images, the luminance half-life of the display, or sunlight readability of the display.
Head-up display (HUD)	Head-up displays should be used in either of two circumstances. First, if there is a need to present an electronic image conformal with (precisely overlaid on) the outside scene, HUD's are the most obvious way to address this need. Second, a properly placed and collimated HUD may be used to decrease visual transitions from head-down displays to the outside, forward scene.
Indicator lights	Indicator lights should be used to indicate system, equipment, and/or control condition. They should be used to display qualitative information when an immediate reaction by the user is needed or to draw attention to an important system status.
Light-emitting diode (LED), matrix addressed	Matrix-addressed LED's should be used for graphics applications when display visibility from multiple viewer positions, low physical display volume, and high display mean time between failures are more important than high resolution, high brightness, low power consumption, and sunlight visibility. *(Table continued on next page.)*

Table 42. Displays: when to use (continued).

Display	When to Use
Liquid crystal display (LCD) • Transflective, segmented characters. • Transflective, matrix addressed. • Transmissive, matrix addressed.	Transflective LCD's should be used where sunlight visibility, low power consumption, and display visibility from multiple viewer positions are more important than a multicolor, high resolution display. Transmissive LCD's should be used where display brightness, display resolution, and multicolor display are more important than sunlight visibility, low power consumption, and display visibility from multiple viewer positions. Seven-segment displays should be used only for applications requiring numeric information.
Plasma (gas discharge), matrix addressed	Matrix-addressed plasma displays should be used for graphics applications when display visibility from multiple viewer positions, low physical display volume, low power consumption, and high display mean time between failures are more important than high resolution, high brightness, the display of multicolored objects, and sunlight visibility.
Speech display	Speech displays should be used in situations where the user's eyes are busy or mobility is required. Avoid using a speech display when frequency of use is high, when multiple messages must be displayed simultaneously, or when the user would be expected to remember a series of instructions.

Nonspeech auditory display	Nonspeech auditory displays should be used under the following conditions:
	• The information that is to be processed is short, simple, and transitory, requiring an immediate or time-based response.
	• The visual display is restricted by:
	  • Overburdening.
	  • Ambient light variability or limitation.
	  • User mobility.
	  • Degradation of vision (e.g., due to vibration).
	  • Other environmental considerations.
	  • Anticipated user inattention.
	• It is desirable to capture the user's attention.
	• Custom or usage has created the anticipation of an auditory display.
	• An auditory presentation is desirable to reinforce a visual presentation.

Vacuum fluorescent display (VFD) • Segmented characters. • Matrix addressed.	Vacuum fluorescent displays should be used for character displays and graphics applications when display visibility from multiple viewer positions, high display brightness, low physical display volume, and high display mean time between failures are more important than the display of high resolution, multicolored objects. Seven-segment displays should be used only for applications requiring numeric information.

References

1. Malone, T.B. (1985). Human factors in early system development. *Proceedings of the Human Factors Society 29th Annual Meeting* (pp. 1156–1160). Santa Monica, CA: Human Factors Society.

2. Meister, D. (1987). A cognitive theory of design and requirements for a behavioral design aid. In W.B. Rouse and K.R. Boff (Eds.), *System design: Behavioral perspectives on designers, tools, and organizations.* New York: North-Holland.

3. Lund, R.T., Bishop, A.B., Newman, A.E., & Salzman, H. (1993). *Designed to work: Production systems and people.* New Jersey: Prentice Hall.

4. Tsao, H.S.J., Hall, R.W., Shladover, S.E., Plocher, T.A., & Levitan, L. (1993). *Human factors design of automated highway systems: First generation scenarios.* Technical Report No. FHWA-RD-93-123. Washington, DC: Federal Highway Administration.

5. National Automated Highway System Consortium (1996). *Automated highway system concept summaries.* Troy, MI: Author.

6. Levitan, L., Llaneras, R.E., DeMers, R.E., & Plocher, T.A. (1994). *Human factors design of automated highway systems: Comparable systems analysis.* Revised Working Paper (Contract No. DTFH61-92-C-00100; unpublished). Washington, DC: Federal Highway Administration.

7. National Automated Highway System Consortium (1996). *Comparison of automated highway system concepts.* Workshop No. 3 (Minneapolis, MN). Troy, MI: Author.

8. Gordon, C.C., Churchill, T., Clauser, C.E., Bradtmiller, B., McConville, J.T., Tebbetts, I., & Walker, R.A. (1988). *Anthropometric survey of U.S. army personnel: Summary statistics and interim report.* Natick, MA: United States Army Natick Research, Development & Engineering Center.

9. Tilley, A.R. (1993). *The measure of man and woman.* New York: The Whitney Library of Design.

10. Woodson, W.E., Tillman, B., & Tillman, P. (1992). *Human factors design handbook* (2nd ed.). New York: McGraw-Hill, Inc.

11. Glorig, A., & Roberts, J. (1965). *Hearing levels of adults by age and sex. United States —1960–1962.* National Center for Health Statistics series 11, number 11. Hyattsville, MD: U.S. Department of Health, Education, and Welfare.

12. Boff, K.R., & Lincoln, J.E. (1988). *Engineering data compendium. Human perception and performance.* Wright-Patterson Air Force Base, Ohio: Armstrong Aerospace Medical Research Laboratory.

13. Department of Defense (1989). *Military standard 1472. Human engineering design criteria for military systems, equipment, and facilities.* Washington, DC: U.S. Government Printing Office.

14. Department of Defense (1992). *Military handbook 759. Human factors engineering design for Army materiel.* Washington, DC: U.S. Government Printing Office.

15. Dreyfuss, H. (1959). *The measure of man.* New York: Whitney Library of Design.

16. Society of Automotive Engineers, Inc. (1993). *Handbook volume 4: On-highway vehicles and off-highway machinery.* Warrendale, PA: Author.

17. Churchill, E., Churchill, T., McConville, J.T., & White, R.M. (1977). *Anthropometry of women of the U.S. Army—1977.* Report No. 2—the basic univariate statistics. Technical report Natick/TR-77/024. Natick, MA: United States Army Natick Research and Development Command.

18. Stoudt, H.W. (1978). Arm-leg reach and workspace layout. In Churchill, W., Laubach, L.L., McConville, J.T., & Tebbetts, I. (Eds.), *Anthropometric source book* (Vol. I: Anthropometry for designers). NASA reference publication 1024. Houston: National Aeronautics and Space Administration, Lyndon B. Johnson Space Center.

19. Pierce, B.F., Woodson, W.E., & Selby, P.H. (1973). *Human force considerations in the failure of power assisted devices.* Report DOT HS 230 2-396. Washington, DC: U.S. Department of Transportation.

20. Lerner, N. (1993). Brake perception-reaction times of older and younger drivers. *Proceedings of the Human Factors and Ergonomics Society 37th Annual Meeting* (pp. 206–210). Santa Monica, CA: Human Factors and Ergonomics Society.

21. Lings, S. (1991). Assessing driving capability: a method for individual testing. *Applied Ergonomics, 22(2),* 75–84.

22. Society of Automotive Engineers, Inc. (1994). *Direction-of-movement stereotypes for automotive hand controls.* Surface Vehicle Recommended Practice No. J1139. Warrendale, PA: Author.

23. Wickens, C.D. (1987). Information processing, decision-making, and cognition. In G. Salvendy (Ed.), *Handbook of human factors.* New York: John Wiley & Sons.

24. Department of the Air Force (1980). *AFSC design handbook 1-3. Human factors engineering* (3rd ed., rev. one). Wright-Patterson Air Force Base, OH: Author.

25. Van Cott, H.P., & Kinkade, R.G. (Eds.). (1972). *Human engineering guide to equipment design.* Washington, DC: U.S. Government Printing Office.

26. Miller, K.H. (Ed.). (1991). *NASA-STD-3000. Space station Freedom man-systems integration standards* (Vol. IV, Rev. A). Houston: National Aeronautics and Space Administration, Lyndon B. Johnson Space Center.

27. Kroemer, K.H.E., Kroemer, H.B., & Kroemer-Elbert, K.E. (1994). *Ergonomics. How to design for ease and efficiency.* Englewood Cliffs, NJ: Prentice Hall.

28. Eastman Kodak Company (1983). *Ergonomic design for people at work* (Vol. I). New York: Van Nostrand Reinhold.

29. Woodson, W.E., & Conover, D.W. (1964). *Human engineering guide for equipment designers* (2nd ed.). Los Angeles: University of California Press.

30. Diffrient, N., Tilley, A.R., & Harman, D. (1981). *Humanscale 4/5/6.* Cambridge, MA: The MIT Press.

31. Mayhew, D. J. (1992). *Principles and guidelines in software user interface design.* Englewood Cliffs, NJ: Prentice Hall.

32. Rudisill, M., Gillan, D., Lewis, R., Holden, K., Adam, S., & McKay, T. (1988). *Space station information system human-computer interface guide* (Version 2.0). Houston: National Aeronautics and Space Administration, Lyndon B. Johnson Space Center.

33. Simpson, C.A., McCauley, M.E., Roland, E.F., Ruth, J.C., & Williges, B.H. (1987). Speech controls and displays. In G. Salvendy (Ed.), *Handbook of human factors.* New York: John Wiley & Sons.

34. Halstead-Nussloch, R. (1989). The design of phone-based interfaces for consumers. *Proceedings of CHI '89* (pp. 347–352). Reading, MA: Addision-Wesley Publishing Company.

35. Jones, D., Hapeshi, K., & Frankish, C. (1989). Design guidelines for speech recognition interfaces. *Applied Ergonomics, 20(1),* 47–52.

36. Wattenberger, B. L., Garberg, R. B., Halpern, E. S., & Lively, B. L. (1993). Serving customers with automatic speech recognition—human-factors issues. *AT&T Technical Journal,* May/June, 28–41.

37. R. Whillock, personal communication, May 1997.

38. Weintraub, D.J., & Ensing, M. (Eds.). (1992). *Human factors issues in head-up display design: The book of HUD*. Report No. SOAR 92-2. Wright-Patterson Air Force Base, OH: Department of Defense.

39. American National Standards Institute (1988). American national standard for *human factors engineering of visual display terminal workstations.* ANSI/HFS standard no. 100-1988. Santa Monica, CA: The Human Factors Society.

40. Beatty, P. (1989). Automotive and marine applications. In D. Bosman (Ed.), *Display engineering.* New York: North-Holland.

41. W. Reinhart, personal communication, October 1996.

42. Smith, S.L., & Mosier, J.N. (1986). *Guidelines for designing user interface software.* Bedford, MA: MITRE Corporation.

43. Society of Automotive Engineers, Inc. (Draft 2). *Human integration for color criteria and standards.* Aerospace recommended practice (ARP) 4032. Warrendale, PA: Author.

44. Federal Aviation Administration (1987). *Transport category airplane electronic display systems.* Advisory circular FAA AC 25-11. Washington, DC: U.S. Department of Transportation.

45. Decker, J.J., Dye, C.J., Lloyd, C.J., & Snyder, H.L., (1991). *The effects of display failures and symbol rotation on visual search and recognition performance.* Technical memorandum 4-91. Aberdeen Proving Ground, MD: U.S. Army Human Engineering Laboratory.

46. Gilmore, W.E., Gertman, D.I., & Blackman, H.S. (1989). *The user-computer interface in process control: A human factors engineering handbook.* New York: Academic Press.

47. Society of Automotive Engineers, Inc. (1989). *Design objectives for liquid crystal displays for part 25 (transport) aircraft.* Aerospace recommended practice (ARP) 4256 (Draft 2). Warrendale, PA: Author.

48. U.S. Nuclear Regulatory Commission (1981). *Guidelines for control room design reviews.* NUREG-0700. Washington, DC: Author.

49. Miller, K.H. (Ed.) (1989). *NASA-STD-3000. Space station Freedom man-systems integration standards* (Vol. I, Rev. A). Houston: National Aeronautics and Space Administration, Lyndon B. Johnson Space Center.

50. Baker, C.A., & Nicholson, R.M. (1967). Raster scan parameters and target identification. *Proceedings of the 19th Annual National Aerospace Electronics Conference* (pp. 285–290). Dayton, OH: Institute of Electrical and Electronics Engineers.

51. Society of Automotive Engineers, Inc. (1982). *Minimum performance standard for airborne multipurpose electronic displays.* Aerospace standard (AS) 8034. Warrendale, PA: Author.

52. Burnette, J.T. (1976). Optimal element size-shape-spacing combinations for a 5 x 7 dot-matrix visual display under high and low ambient illumination. Unpublished Master's thesis. Cited in Decker, J.J., Pigion, R.D., & Snyder, H.L. (1987). *A literature review and experimental plan for research on the display of information on matrix-addressable displays.* Technical memorandum 4-87. Aberdeen Proving Ground, MD: U.S. Army Human Engineering Laboratory.

53. Lloyd, C.J., Decker, J.J., & Snyder, H.L. (1991). *The effects of line and cell failures on reading and search performance using matrix-addressable displays.* Technical memorandum 7-91. Aberdeen Proving Ground, MD: U.S. Army Human Engineering Laboratory.

54. Dudfield, H.J. (1991). Colour head-up displays: help or hindrance? *Proceedings of the Human Factors Society 35th Annual Meeting* (pp. 146–150). Santa Monica, CA: Human Factors Society.

55. Wood, R.B. (1992). Holographic head-up displays. In M.A. Karim (Ed.), *Electro-optical displays.* New York: Marcel Dekker.

56. Inuzuka, Y., Osumi, Y., & Shinkai, H. (1991). Visibility of head-up displays (HUD) for automobiles. *Proceedings of the Human Factors Society 35th Annual Meeting* (pp. 1574–1578). Santa Monica, CA: Human Factors Society.

57. Newman, R.L. (1987). *Improvement of head-up display standards. Volume I: Head-up display design guide (appendix).* Report AFWAL-TR-87-3055 (Vol. I). Wright-Patterson Air Force Base, OH: Air Force Systems Command.

58. Sorkin, R.D. (1987). Design of auditory and tactile displays. In G. Salvendy (Ed.), *Handbook of human factors.* New York: John Wiley & Sons.

59. Simpson, C.A., McCauley, M.E., Roland, E.F., Ruth, J.C., & Williges, B.H. (1985). System design for speech recognition and generation. *Human Factors, 27(2),* 115–141.

60. Devauchelle, P. (1991). User-friendly recommendations for voice services designers. Article in French. Cited in Schumacher, R. M., Jr. (1992). Phone-based interfaces: research and guidelines. *Proceedings of the Human Factors Society 36th Annual Meeting* (pp. 1051–1055). Santa Monica, CA: Human Factors Society.

61. Schumacher, R. M., Jr. (1992). Phone-based interfaces: research and guidelines. *Proceedings of the Human Factors Society 36th Annual Meeting*, (pp. 1051–1055). Santa Monica, CA: Human Factors Society.

62. Sanders, M. S., & McCormick, E. J. (1987). *Human factors in engineering and design.* New York: McGraw-Hill.

63. American National Standards Institute (1992). Project 0976-D: Standard user interface to voice messaging. Working document. Cited in Schumacher, R. M., Jr. (1992). Phone-based interfaces: research and guidelines. *Proceedings of the Human Factors Society 36th Annual Meeting*, (pp. 1051–1055). Santa Monica, CA: Human Factors Society.

64. Gallaway, G. R. (1981). Response times to user activities in interactive man/ machine computer systems. *Proceedings of the Human Factors Society 25th Annual Meeting* (pp. 754–758). Santa Monica, CA: Human Factors Society.

65. Demers, R.E. (1994). *Human factors for the automated highway system: second generation function definition.* Revised Working Paper (Contract No. DTFH61-92-C-00100; unpublished). Washington, DC: Federal Highway Administration.

66. Bloomfield, J.R., Buck, J.R., Carroll, S.A., Booth, M.W., Romano, R.A., McGehee, D.V., & North, R.A. (1995). *Human factors aspects of the transfer of control from the Automated Highway System to the driver.* Technical Report No. FHWA-RD-94-114. Washington, DC: Federal Highway Administration.

67. Bloomfield, J.R., Buck, J.R., Christensen, J.M., & Yenamandra, A. (1995). *Human factors aspects of the transfer of control from the driver to the Automated Highway System.* Technical Report No. FHWA-RD-94-173. Washington, DC: Federal Highway Administration.

68. Bloomfield, J.R., Christensen, J.M., Peterson, A.D., Kjaer, J.M., & Gault, A. (1995). *Human factors aspects of transferring control from the driver to the automated highway system with varying degrees of automation.* Technical Report No. FHWA-RD-95-108. Washington, DC: Federal Highway Administration.

69. R. Frazzini, personal communication, July 1996.

70. Bloomfield, J.R., Carroll, S.A., Papelis, Y.E., & Bartelme, M.J. (1996). *The driver's response to an automated highway system with reduced capability.* Technical Report No. FHWA-RD-96-067. Washington, DC: Federal Highway Administration.

71. R.E. DeMers, personal communication, June 1994.

72. Bloomfield, J.R., Levitan, L., Grant, A.R., Brown, T.L., & Hankey, J.M. (in press). *Driving performance after an extended period of travel in an automated highway system.* Washington, DC: Federal Highway Administration.

Index

Accidental actuation prevention
clearances between controls (guideline 4), 25
design of controls covers and guards (guideline 9), 27
emergency control location (guideline 7), 27
methods of (guideline 6), 26
noninterference with control operation time (guideline 5), 26
use of barrier guards as handholds (guideline 11), 28
use of protective devices for controls (guideline 8), 27
visibility of covered controls (guideline 10), 27

Acuity
Snellen (table 3), 15

Analog indicator
character heights for fixed scale indicators (guideline 165), 74
color of markings (guideline 163), 73
direction of numbers increase (guideline 171), 78
double-ended pointers (guideline 183), 83
general guidelines for scale markings (guideline 169), 77
graduation marks at scale start and end (guideline 173), 78
interpolation (guideline 174), 79
location of numbers (guideline 189), 85
luminance contrast (guideline 164), 73
methods for improving dual pointer visibility and discriminability (guideline 181), 82
multirevolution pointer movement (guideline 188), 85
orientation of numbers (guideline 170), 77
pointer color (guideline 180), 81
pointer length (guideline 176), 80
pointer mounting (guideline 179), 81
pointer pivot location (guideline 178), 81
pointer shape (guideline 175), 79
pointer tail length (guideline 182), 82
position of zero on scales with positive and negative numbers (guideline 177), 80
preferred type (guideline 159), 71
scale compatibility when comparing two or more (guideline 161), 72
scale graduation type (guideline 160), 71
specifications for graduation marks (guideline 168), 75
stroke width of numbers (guideline 166), 74
type of number for graduation marks (guideline 172), 78
use in making settings (guideline 184), 83
use of double pointers or scales (guideline 162), 72

Analog indicator
when an operating condition always falls within a limited range of the scale (guideline 186), 84
when less than a full rotation of the pointer covers the scale (guideline 187), 85
when to use (guideline 158), 71
width of numbers (guideline 167), 75
zone markings (guideline 185), 83

Cathode ray tube (CRT) display
definition, 87
image quality (guideline 192), 87
lines per symbol height (guideline 194), 88
misconvergence (guideline 195), 88
refresh rate (guideline 193), 87
use of general guidelines for electronic displays (guideline 191), 87
when to use (guideline 190), 87

Character height
formula (footnote to table 22), 64

Controls
minimum separations (guideline 3), 25
selection factors (guideline 1), 21

Counters
between-numbers spacing (guideline 207), 93
contrast between characters and immediate background (guideline 212), 95
counter drums numbering (guideline 205), 92
counter frame color (guideline 203), 91
decimal points and commas (guideline 209), 94
digital display illumination (guideline 214), 96
finish on drum surface and surround (guideline 198), 89
how numbers should change (guideline 197), 88
leading zeros (guideline 211), 94
mounting (guideline 208), 93
number height-to-width ratio (guideline 206), 93
number of digits in an open window (guideline 213), 95
numbers with more than five digits (guideline 210), 94
orientation of numbers (guideline 201), 90
rate of numbers change (guideline 199), 90
resetting counters used to indicate sequencing of equipment (guideline 200), 90
spacing between number drums (guideline 202), 91
specifications (guideline 204), 92
when to use (guideline 196), 88

Displays, electronic
accentuating color differences (guideline 133), 63
air from display components (guideline 120), 60
avoiding glare (guideline 129), 62
between-characters spacing (guideline 149), 67
between-lines spacing (guideline 150), 68
between-words spacing (guideline 151), 68
brightness/contrast compensation (guideline 140), 65
character height for legibility (guideline 153), 68
character height for nontime-critical reading (guideline 155), 68
character height for readability (guideline 154), 68
character height-to-width ratio (guideline 144), 66
character heights and color discrimination (guideline 138), 64
color as a stand-alone cue (guideline 130), 62
color coding quantitative information (guideline 131), 62
color conventions (guideline 135), 63
contrast enhancement filter (guideline 125), 61
display luminance (guideline 123), 60
flashing symbols (guideline 143), 66
font type (guideline 152), 68
immediate display surround (guideline 121), 60
luminance adjustment (guideline 119), 59
luminance half-life (guideline 126), 61
luminance range (guideline 124), 60
luminance uniformity (guideline 141), 65
matrix size for numeric and upper case characters (guideline 146), 67
matrix size for reading or legibility (guideline 147), 67
matrix size for special characters (guideline 145), 66
matrix size for symbol rotation (guideline 148), 67
minimum contrast ratio (guideline 122), 60
minimum viewing distance (guideline 156), 69
number of colors to use (guideline 132), 62
polarity (guideline 139), 65
relative brightness and chromaticity of colors (guideline 134), 63
relative discrimination and luminance differences (guideline 142), 66
surface temperatures (guideline 128), 61
symbol/image motion (guideline 157), 70
use of pure blue (guideline 136), 64
use of pure red and pure blue together (guideline 137), 64
visibility envelope (guideline 127), 61
when to use (guideline 118), 59

Electroluminescent (EL) display
definition, 96
failure rates for pixels and lines (guideline 219), 97
matrix anomalies (guideline 217), 96

Electroluminescent (EL) display
pixel shape (guideline 218), 97
use of general guidelines for electronic displays (guideline 216), 96
when to use (guideline 215), 96

Eye and head movements
horizontal (table 3), 15
vertical (table 3), 15

Fields of view
binocular (table 3), 15

Foot pushbuttons
indication of actuation (guideline 16), 30
location (guideline 14), 29
specifications (guideline 17), 30
use in a wet environment (guideline 15), 29
use of general controls guidelines (guideline 13), 29
when to use (guideline 12), 29

Function keys dialogue
consistency in key assignments (guideline 438), 149
continuously available functions (guideline 437), 149
definition, 147
feedback about actuation (guideline 434), 149
function label (guideline 443), 150
generic labeling of hard keys associated with soft key labels (guideline 441), 150
hard keys and use of general labeling guidelines (guideline 444), 150
if a key is used for more than one function (guideline 433), 147
indicating active keys (guideline 435), 149
number and use (guideline 442), 150
pressing a function key in a sequence of unrelated key presses (guideline 447), 151
results of pressing a function key (guideline 446), 151
soft key labels and use of displays guidelines (guideline 445), 150
spatial relationship between soft key labels and hard keys (guideline 440), 149
unneeded keys (guideline 436), 149
use of qualifier keys (guideline 439), 149
when to use (guideline 432), 147

Head-up display (HUD)
angular displacement of real-world objects (guideline 227), 99
between-characters spacing (guideline 233), 101
between-words spacing (guideline 234), 101
character heights (guideline 229), 100
combining glass assembly design (guideline 226), 99

Head-up display (HUD)
definition, 97
factors to consider in selecting an image source (guideline 222), 98
field of view (guideline 240), 102
head motion box (eye box) size (guideline 223), 98
image (focus) distance (guideline 238), 102
image impact on normal vehicle operation (guideline 225), 99
matrix size (guideline 235), 101
raster lines per symbol height (guideline 230), 100
salience of edges around the combiner (guideline 228), 99
stroke-width-to-symbol-height ratio (guideline 231), 100
symbol luminance (guideline 237), 101
symbol width (guideline 232), 101
transmission through the windshield (guideline 224), 99
use of color (guideline 236), 101
use of general guidelines for electronic displays (guideline 221), 98
vergence angle (guideline 239), 102
when to use (guideline 220), 98

Hearing thresholds
females (table 3), 14
males (table 3), 14

Heights
females, ages 17 to 51 (table 3), 12
females, ages ≥70 (table 3), 12
males, ages 17 to 51 (table 3), 11
males, ages ≥70 (table 3), 11

Indicator light
between-lights spacing (guideline 245), 104
brightness of warning and caution signals (guideline 257), 108
false indications (guideline 258), 108
flashing (guideline 262), 110
incandescent lamp color conventions (guideline 259), 108
indicators on a control panel (guideline 254), 107
inferring system or equipment status (guideline 249), 106
labeling location (guideline 246), 105
lamp removal and replacement (guideline 253), 107
light-emitting diode color conventions (guideline 260), 109
location of a critical function indicator (guideline 251), 107
location of an indicator associated with a control (guideline 250), 106
luminance (guideline 256), 108
meaning of absence or extinguishment of a light (guideline 248), 105
meaning of changes in light status (guideline 247), 105

Indicator light
prevention of indicator lens interchanging (guideline 255), 107
size coding (guideline 261), 109
state indications (guideline 243), 103
use of a light-emitting diode (guideline 252), 107
use of an LED and general displays guidelines (guideline 242), 103
use under varied ambient illuminance (guideline 244), 104
when to use (guideline 241), 103

Joysticks
isometric
definition, 31
indicators for how to bring the controlled object back onto the display when used in rate control applications (guideline 20), 32
relationship between applied force and x/y output (guideline 22), 32
specifications (guideline 23), 32
use of general controls guidelines (guideline 19), 31
use of wrist or forearm support (guideline 21), 32
when to use (guideline 18), 31
isotonic
definition, 31
in rate control applications (guideline 25), 33
indicators for how to bring the controlled object back onto the display when used in rate control applications (guideline 24), 33
specifications (guideline 27), 33
use of general controls guidelines (guideline 19), 31
use of wrist or forearm support (guideline 26), 33
when to use (guideline 18), 31

Key operated switches
color, shape, and size coding (guideline 30), 34
direction of movement (guideline 33), 34
location of key teeth (guideline 31), 34
location of OFF (guideline 32), 34
removing the key from the lock (guideline 34), 34
specifications (guideline 35), 35
use of general controls guidelines (guideline 29), 34
when to use (guideline 28), 34

Knobs
serrated edge on (guideline 41), 37
shape coding (guideline 42), 37
specifications (guideline 44), 37
use of fixed pointer, moving scale arrangement (guideline 40), 37
use of general controls guidelines (guideline 37), 36
when adjustment requires reference to a scale (guideline 38), 36

Knobs
when located where they can be contacted in a crash (guideline 43), 37
when movement involves more than 360° of rotation (guideline 39), 36
when to use (guideline 36), 36

Labeling
basis for choosing words and symbols (guideline 366), 133
between-labels spacing (guideline 390), 140
between-lines spacing (guideline 381), 136
between-words spacing (guideline 380), 136
bold faced letters (guideline 377), 135
character heights (guideline 378), 135
character polarity (guideline 383), 136
control position labeling (guideline 387), 140
controls and displays used together (guideline 374), 134
extended instructions (guideline 385), 136
functional groups of controls and displays (guideline 388), 140
general content (guideline 367), 133
general rules for locating labels (guideline 369), 134
height-to-width ratios (guideline 379), 136
hierarchical scheme (guideline 386), 137
identical function and application (guideline 375), 134
illuminated labels (guideline 382), 136
letter case (guideline 376), 135
nomenclature consistency (guideline 368), 133
number of words (guideline 365), 133
orientation of words (guideline 372), 134
permanence (guideline 364), 133
rotating controls (guideline 370), 134
shadows and glare (guideline 389), 140
type of words (guideline 371), 134
units of measurement (guideline 384), 136
unrelated controls and displays (guideline 373), 134
use of abbreviations (guideline 363), 133
when to use (guideline 362), 133

Legend switches
indication of switch actuation (guideline 48), 39
lamp replacement (guideline 51), 40
lamp test conditions (guideline 50), 40
legend legibility (guideline 49), 40
location within the visual field (guideline 53), 40
number of lines of lettering (guideline 52), 40
specifications (guideline 54), 40
use of barriers (guideline 47), 39
use of general controls guidelines (guideline 46), 39

Light-emitting diode (LED) display
when to use (guideline 45), 39
definition, 111
failure rates for pixels and lines (guideline 267), 112
matrix anomalies (guideline 265), 111
pixel shape (guideline 266), 111
use of general displays guidelines (guideline 264), 111
when to use (guideline 263), 111

Liquid crystal display (LCD)
color discriminability (guideline 270), 113
daytime use of transflective, segmented LCD's (guideline 271), 113
definition, 112
failure rates for pixels and lines (guideline 275), 114
luminance of transmissive LCD's (guideline 272), 113
matrix anomalies (guideline 273), 114
pixel shape (guideline 274), 114
use of general displays guidelines (guideline 269), 113
when to use (guideline 268), 113

Luminance contrast
formula (guideline 164), 73

Menu selection dialogue
actuation when selection is by pointing (guideline 452), 152
code presentation when selection is by code entry (guideline 454), 153
command area when selection is by code entry (guideline 453), 152
cursor placement when selection is by pointing (guideline 459), 153
definitions, 151
feedback about choice selection (guideline 462), 154
feedback about commanded-action completion (guideline 463), 154
general rules for choices (guideline 466), 155
hierarchy depth vs. breadth (guideline 464), 154
if character codes are used with choices (guideline 469), 156
if numbers are used with choices (guideline 468), 155
inactive choices (guideline 465), 154
indication of current position in a hierarchy (guideline 460), 153
menu list format (guideline 451), 152
menu selection short cuts (guideline 471), 156
menu title (guideline 450), 152
null entry when control is by keyed command or option code (guideline 455), 153
ordering of choices (guideline 467), 155
returning to the next higher level in a hierarchy (guideline 461), 154
when a cursor is used to select a choice (guideline 470), 156

Menu selection dialogue
when menu selection is the primary means of sequence control (guideline 449), 151
when selection is by letter code (guideline 457), 153
when selection is from a long list (guideline 458), 153
when to use (guideline 448), 151
wording of choices (guideline 456), 153

Nonspeech auditory display
alert and warning signal audibility (guideline 321), 124
alert and warning signal distinctiveness (guideline 322), 124
alerting signal repetition, persistence, and reset (guideline 309), 122
attention-demanding signal (guideline 302), 121
automatically-initiated warning signal persistence and reset (guideline 316), 123
caution signal persistence and reset (guideline 312), 123
coding principles (guideline 290), 120
definitions, 118
direction of sound (guideline 294), 120
discriminability among signals (guideline 307), 122
false alarms (guideline 305), 122
frequency range (guideline 297), 121
harmonics (guideline 298), 121
intensity (guideline 299), 121
number of warning signal frequency components (guideline 320), 124
onset rate (guideline 300), 121
operability test (guideline 289), 120
prominent frequency components (guideline 298), 121
signal burst duration (guideline 303), 121
signal types to avoid (guideline 304), 121
simultaneous warning signals (guideline 317), 123
single element signal, definition, 118
strengths and weaknesses (guideline 288), 119
time to contain essential information in single-element signal (guideline 296), 121
time to contain information in a two-element warning signal (guideline 315), 123
transmission system (guideline 293), 120
two element signal, definition, 118
use of a single-element warning signal (guideline 314), 123
use of unique codes (guideline 291), 120
volume control (guideline 306), 122
warning signal failure (guideline 319), 123
warning signal power source (guideline 318), 123
when a failure can result in sustained actuation of the display (guideline 292), 120

Nonspeech auditory display
when an alerting signal consists of a glissando (guideline 308), 122
when the signal is to be quantifiable (guideline 295), 120
when the total number of caution signals is small (guideline 310), 122
when the total number of warning signals is small (guideline 313), 123
when to use (guideline 286), 118
when to use a nonspeech auditory display vs. a speech display (guideline 287), 119
when using a single-element caution signal (guideline 311), 123
when using multiple frequencies (guideline 301), 121

Operational guidelines
alerting the driver that the AHS roadway is ending (guideline 506), 165
automated-lane width (guideline 512), 169
between-vehicles gaps in strings of vehicles (guideline 508), 166
critical safety systems and false alarms (guideline 504), 165
disengaging the automation in an emergency (guideline 505), 165
driver steering when under automated control (guideline 500), 164
if the driver disregards an alarm (guideline 498), 163
if the driver must accurately position the vehicle (guideline 499), 163
manual lane changes (guideline 503), 164
method of transferring control from the AHS to the driver (guideline 514), 170
method of transferring control from the driver to the AHS (guideline 511), 167
preventing unwanted transfer of control to the automation (guideline 502), 164
speeds of vehicles entering the automated lane (guideline 509), 166
speeds of vehicles leaving the automated lane (guideline 510), 167
transferring control to the automation (guideline 501), 164
use of a backup display in the vehicle (guideline 507), 165
use of simple barriers to segregate manual and automated vehicles (guideline 513), 169

Perception-reaction time
braking (table 3), 18

Plasma display
definition, 115
failure rates for pixels and lines (guideline 280), 116
matrix anomalies (guideline 278), 115
pixel shape (guideline 279), 115
use of general displays guidelines (guideline 277), 115
when to use (guideline 276), 115

Pushbuttons
color of a palm pushbutton when used as an emergency control (guideline 69), 44

Pushbuttons
diameter when mounted at the end of a handle (guideline 63), 43
feedback with a single-button alternate action pushbutton (guideline 66), 43
feedback with a two-button alternate action pushbutton (guideline 67), 43
height above the panel when depressed (guideline 60), 42
indication of switch actuation/deactuation (guideline 57), 42
labeling (guideline 62), 43
noninterference with the host control when mounted on the end of a handle (guideline 65), 43
prevention of accidental actuation (guideline 68), 44
specifications (guideline 70), 44
switchcap shape (guideline 61), 42
use in the dark (guideline 58), 42
use of general controls guidelines (guideline 56), 41
visibility when mounted at the end of a handle (guideline 64), 43
when internal illumination is used (guideline 59), 42
when to use (guideline 55), 41

Question and answer dialogue
contextual information for answering a question (guideline 476), 157
definition, 157
distinguishing among displayed information (guideline 481), 158
feedback for commands (guideline 477), 157
grammatical form for questions (guideline 479), 158
number of control actions to respond to a question (guideline 482), 159
number of questions to be displayed simultaneously (guideline 473), 157
space for answering the question, and cursor location (guideline 475), 157
transaction title (guideline 478), 158
use of capital letters in user inputs (guideline 483), 159
use of negatives in questions (guideline 480), 158
when a series of questions is interrelated (guideline 474), 157
when to use (guideline 472), 157

Reach
as a function of height above the sitting surface (table 3), 16
as a function of seat back angle (table 3), 16
elbow to grip length (table 3), 16
functional/extended (table 3), 16
functional/normal (table 3), 16

Reaction time
braking/choice (table 3), 18
braking/simple (table 3), 18
steering/choice (table 3), 19
steering/simple (table 3), 19

Rocker switches
character dimensions for internally illuminated switches (guideline 76), 47
differentiating switch positions (guideline 75), 46
orientation when used for ON-OFF functions (guideline 73), 46
specifications (guideline 78), 47
switch feel (guideline 74), 46
use of a guard to prevent accidental actuation (guideline 77), 47
use of general controls guidelines (guideline 72), 46
when to use (guideline 71), 46

Rotary selectors
general criteria (guideline 83), 49
number of selectable positions (guideline 82), 48
preferred shape (guideline 81), 48
specifications (guideline 85), 50
use of a guard to prevent accidental actuation (guideline 84), 50
use of general controls guidelines (guideline 80), 48
when to use (guideline 79), 48

Slide switches
indication of setting when there are more than two positions (guideline 90), 52
orientation (guideline 89), 52
specifications (guideline 92), 52
switch feel (guideline 88), 52
use of a guard to prevent accidental actuation (guideline 91), 52
use of general controls guidelines (guideline 87), 52
when to use (guideline 86), 51

Speech display
alerting sounds with machine-quality warnings (guideline 337), 126
alerting with machine-sounding warnings (guideline 338), 126
appropriate use (guideline 333), 125
capability to cancel warnings (guideline 343), 127
digitized vs. synthetic speech (guideline 335), 126
false alarms (guideline 328), 125
intensities of cautions and warnings (guideline 339), 126
interval between successive warnings (guideline 340), 127
message priority system (guideline 341), 127
number of syllables in warnings (guideline 342), 127
operability test (guideline 327), 125
order of information in an instructional prompt (guideline 331), 125
output rate (guideline 325), 124
phrasing of prompts (guideline 347), 128
presenting long messages or stand-alone information (guideline 334), 125
repeat capability (guideline 332), 125

Speech display
rules for recording messages (guideline 344), 127
structure of unpredictable messages (guideline 326), 125
synthetic speech intelligibility (guideline 336), 126
use of single letters as codes (guideline 345), 128
warning signal failure (guideline 329), 125
when a failure can result in sustained actuation of the display (guideline 330), 125
when to repeat prompts (guideline 346), 128
when to use (guideline 323), 124
when to use a speech display vs. a nonspeech auditory display (guideline 324), 124

Strength
foot push (table 3), 16
two handed rotational force (table 3), 16

Toggle switches
orientation (guideline 95), 53
specifications (guideline 98), 54
switch feel (guideline 96), 54
use of a guard to prevent accidental actuation (guideline 97), 54
use of general controls guidelines (guideline 94), 53
when to use (guideline 93), 53

Touch screens
actuation force (guideline 105), 56
criterion touch duration (guideline 106), 56
indication of actuation (guideline 104), 56
indication of touch sensitive areas (guideline 101), 55
luminance transmission (guideline 103), 56
size of touch sensitive areas (guideline 102), 56
use of general controls guidelines (guideline 100), 55
when to use (guideline 99), 55

User-computer interactions
affirmative wording (guideline 413), 144
availability of meanings of abbreviations and acronyms (guideline 410), 144
browsing through HELP (guideline 420), 145
canceling an operation (guideline 421), 145
character case (guideline 401), 143
check-in procedures (guideline 393), 141
codes and abbreviations, and conventions (guideline 409), 144
cursor design (guideline 402), 143
cursor image quality (guideline 404), 143
cursor visibility (guideline 403), 143

User-computer interactions
destructive commands (guideline 417), 145
direction of paging (guideline 426), 146
direction of scrolling (guideline 425), 146
electronic checklists (guideline 394), 142
error handling
cursor positioning following an error (guideline 492), 161
error message content (guideline 487), 160
error message when a small set of alternatives is available (guideline 488), 160
removing an error message (guideline 495), 161
timing of error messages (guideline 491), 161
tone of error messages (guideline 489), 161
use of exclamation points (guideline 496), 161
use of hostile words (guideline 497), 161
user requirement in error correction (guideline 494), 161
what to display following an error (guideline 493), 161
when multiple errors are detected (guideline 490), 161
format of prompts (guideline 415), 144
help function (guideline 419), 145
how to form abbreviations (guideline 407), 143
information about whether the system or the driver is in control (guideline 395), 142
integer numbers (guideline 429), 146
leading zeros (guideline 431), 147
manual steering in an emergency (guideline 396), 142
message voice (guideline 405), 143
minimizing driver workload (guideline 392), 141
movement of information when paging (guideline 427), 146
order of information in prompts (guideline 414), 144
preferred scrolling method (guideline 423), 145
presenting information to guide the user through a transaction (guideline 399), 142
real numbers (guideline 430), 147
response time specifications (guideline 484), 159
response time variability (guideline 486), 160
response to user control actions (guideline 485), 160
screen title (guideline 400), 143
scroll increment (guideline 424), 146
scrolling and paging (guideline 422), 145
structure of screen formats (guideline 398), 142
symbols and pictures (guideline 391), 141
system-delay messages (guideline 428), 146
terminology (guideline 416), 145
understandability of abbreviations and acronyms (guideline 408), 143
undoing the last action (guideline 418), 145
what information to present (guideline 397), 142

User-computer interactions
when to use abbreviations and acronyms (guideline 406), 143
wording in prompts and control entries (guideline 412), 144
wording of messages (guideline 411), 144

Vacuum fluorescent display (VFD)
definition, 116
failure rates for pixels and lines (guideline 285), 117
matrix anomalies (guideline 283), 117
pixel shape (guideline 284), 117
use of general displays guidelines (guideline 282), 117
when to use (guideline 281), 116

Vergence angle
formula (guideline 239), 102

Voice recognition
combined with other tasks (guideline 117), 58
expected system accuracy (guideline 112), 57
minimizing recognition errors (guideline 115), 58
nondisruption of task sequences (guideline 114), 58
restrictions on use (guideline 109), 56
training conditions for speaker-dependent systems (guideline 111), 57
use for security purposes (guideline 110), 57
use of general controls guidelines (guideline 108), 56
user feedback (guideline 113), 57
when not to use (guideline 116), 58
when to use (guideline 107), 56

Workspace design
enhancement of emergency displays and controls (guideline 358), 132
enhancement techniques for groups of controls and displays (guideline 355), 130
general arrangement of displays and controls (guideline 352), 130
general location of controls and displays (guideline 354), 130
general methods for control and display placement (guideline 348), 129
glare (guideline 360), 132
illuminated displays and controls (guideline 361), 132
lighting for critical displays (guideline 359), 132
location of displays requiring accurate read-out (guideline 353), 130
location of emergency displays and controls (guideline 357), 131
locations of frequently used displays and controls (guideline 351), 130
multiple control actions for a single function (guideline 350), 129
nonobscuration of displays (guideline 356), 131
when there are related controls and displays (guideline 349), 129