PB2002-104410

DOT/FAA/AR-01/76

Office of Aviation Research
Washington, D.C. 20591

A Study of Helicopter Crash-Resistant Fuel Systems

February 2002

Final Report

This document is available to the U.S. public through the National Technical Information Service (NTIS), Springfield, Virginia 22161.

U.S. Department of Transportation
Federal Aviation Administration

NOTICE

This document is disseminated under the sponsorship of the U.S. Department of Transportation in the interest of information exchange. The United States Government assumes no liability for the contents or use thereof. The United States Government does not endorse products or manufacturers. Trade or manufacturer's names appear herein solely because they are considered essential to the objective of this report. This document does not constitute FAA certification policy. Consult your local FAA aircraft certification office as to its use.

REPRODUCED BY: NTIS
U.S. Department of Commerce
National Technical Information Service
Springfield, Virginia 22161

PROTECTED UNDER INTERNATIONAL COPYRIGHT
ALL RIGHTS RESERVED
NATIONAL TECHNICAL INFORMATION SERVICE
U.S. DEPARTMENT OF COMMERCE

Reproduced from best available copy.

This report is available at the Federal Aviation Administration William J. Hughes Technical Center's Full-Text Technical Reports page: actlibrary.tc.faa.gov in Adobe Acrobat portable document format (PDF).

Technical Report Documentation Page

1. Report No.	2. Government Accession No.	3. Recipient's Catalog No.
DOT/FAA/AR-01/76		

4. Title and Subtitle	5. Report Date
A STUDY OF HELICOPTER CRASH-RESISTANT FUEL SYSTEMS	February 2002
	6. Performing Organization Code
7. Author(s)	8. Performing Organization Report No.
S.H. Robertson, N.B. Johnson, D.S. Hall and I.J. Rimson	RA-FAA-01-130
9. Performing Organization Name and Address	10. Work Unit No. (TRAIS)
Robertson Aviation, L.L.C. 1024 East Vista Del Cerro Drive Tempe, AZ 85281	
	11. Contract or Grant No. DTFA03-98-C-00016
12. Sponsoring Agency Name and Address	13. Type of Report and Period Covered
U.S. Department of Transportation Federal Aviation Administration Office of Aviation Research Washington, DC 20591	Final Report
	14. Sponsoring Agency Code ASW-110

15. Supplementary Notes

The FAA William J. Hughes Technical Center Technical Monitor was Mr. Gary Frings.

16. Abstract

This report presents the results of a study, funded by the Federal Aviation Administration (FAA), of helicopter Crash-Resistant Fuel Systems (CRFS). It covers the historical efforts that led to the current state of the art in military helicopter fuel systems and the more recent modifications to civil certification standards in Title 14 Code of Federal Regulations (CFR) Part 27 (Normal Category Rotorcraft) and Part 29 (Transport Category Rotorcraft).

It describes the basic research, testing, field investigations, and production efforts that have led to the highly successful CRFS, that have saved many lives and have reduced the costs of accidents. While the hardware and fabrics are available today to create the CRFS, the adequacy of the integration of these items into existing and new civil fuel system designs cannot be assessed because of the lack of current field investigation data on civil helicopter crashes. This report reviews this problem, including the forms used for reporting and the current level of available data, which is essentially nonexistent. Training of field investigators in specific crashworthiness technology is of great importance, as well as the need for trained engineers in the design and certification process.

A discussion of the civil and military crash environments is provided to give a background for the discussion of the need for re-evaluation of the rationale used in establishing the current civil regulatory standards. The value of full-scale crash testing during the early development of the military CRFS is reviewed. The lack of any planned tests for the CRFS in current civil helicopters is an area of concern.

A section of the study discusses the individual components of a CRFS, with guidance on the application of each item to the overall system design. This report provides guidance to designers looking for information about CRFS design problems and analytical tools for use in product improvements.

A summary of the changes currently taking place in the regulatory environment (specifications, standards, and regulations) for both military and civil rotorcraft development is included. This is also an area of concern.

This report provides information to the FAA and other governmental organizations that can help them plan their efforts to improve the state of postcrash fire protection in the civil helicopter fleet.

17. Key Words	18. Distribution Statement
Fuel systems, Rotorcraft Fuel systems, Crash-resistant fuel systems, Rotorcraft, Helicopters, Helicopter fuel systems	This document is available to the public through the National Technical Information Service (NTIS) Springfield, Virginia 22161.

19. Security Classif. (of this report)	20. Security Classif. (of this page)	21. No. of Pages	22. Price
Unclassified	Unclassified	170	

Form DOT F1700.7 (8-72) Reproduction of completed page authorized

PREFACE

This research effort and report was prepared by Robertson Aviation, L.L.C. (RA) under Contract No. DTFA03-98-C-00016 with the Federal Aviation Administration (FAA) William J. Hughes Technical Center, where Mr. Gary Frings served as the Technical Representative.

The RA Program Manager for this work was S. Harry Robertson. Major research and writing tasks were provided at RA by crashworthiness engineers Neva B. Johnson, David Hall, and Jeffrey Bracken. Additional research support at RA was provided by David Stover, William York, and Ira Rimson, and by the Aviation Safety Center at Embry-Riddle Aeronautical University in Prescott, Arizona.

Technical assistance was provided by a number of individuals and organizations actively involved in the Aviation Safety field, including the FAA; the NTSB; the Air Line Pilots Association (ALPA); Simula, Inc.; Dr. Dennis Shannahan; Roy Fox of Bell Helicopter; Dan Sydow of Engineered Fabrics Corporation in Rockmart, Georgia; Brian Carnell, retired crashworthiness engineer from Sikorsky Aircraft in Stratford, Connecticut; Dr. James W. Turnbow, retired engineering professor from Arizona State University and Chief Scientist from the Aviation Safety Engineering Research (AvSER) team of crashworthiness researchers in Phoenix, Arizona; and various engineers from the Aeroquip Corporation in Jackson, Michigan, and The Aviation Safety Center at Fort Rucker, Alabama.

TABLE OF CONTENTS

		Page
EXECUTIVE SUMMARY		ix
1.	INTRODUCTION	1-1
2.	HISTORY OF HELICOPTER CRASH-RESISTANT FUEL SYSTEMS	2-1
2.1	Background	2-1
2.2	Defining the Postcrash Fire Problem	2-1
2.2.1	Airplane Crash Testing	2-1
2.2.2	Helicopter Crash Testing	2-2
2.2.3	The Postcrash Fire Environment	2-4
2.3	Development of the Crash-Resistant Fuel System (CRFS)	2-4
2.3.1	Early Developments	2-4
2.3.2	Helicopter Fuel System Development	2-6
2.3.3	Implementation of CRFS in Military Helicopters	2-9
2.3.4	Crash-Resistant Fuel System in Civil Helicopters	2-13
3.	ACCIDENT DATA	3-1
3.1	Military Helicopters	3-1
3.2	Civil Helicopters	3-2
3.3	Accident Report Forms	3-10
3.3.1	Civil Accident Investigation Forms	3-10
3.3.2	U.S. Army Accident Investigation Forms	3-12
3.4	Comparison of Military and Civil Crash Environments	3-13
4.	STATUS OF CURRENT TECHNOLOGY AND IMPLEMENTATION OF CRFS	4-1
4.1	Crash-Resistant Fuel System Design Issues	4-1
4.2	General System Design Criteria	4-1
4.2.1	Aircraft Performance	4-2
4.2.2	Overall Fuel System Design	4-3
4.2.3	Individual Component Design	4-4
4.2.4	Tanks and Fittings	4-4
4.2.5	Self-Sealing Breakaway Valves	4-7
4.2.6	Fuel Lines	4-10
4.2.7	Vent Valves	4-11

4.2.8 Drain Valves 4-13
4.2.9 Spillage Control Valve 4-13

4.3 Assessment of Current Status of CRFS Design 4-15

5. CURRENT CRFS STANDARDS (MILITARY AND CIVIL) 5-1

5.1 Overall System 5-1
5.2 Military Standards and Specifications 5-1

5.2.1 MIL-STD-1290 (series): Light Fixed- and Rotary-Wing Aircraft Crash Resistance 5-1

5.2.2 ADS-11 (series): Survivability Program, Rotary Wing 5-2

5.2.3 ADS-36: Rotary Wing Aircraft Crash Resistance 5-3

5.2.4 Aircraft Crash-Survival Design Guide (TR-89-D-22E) 5-4

5.2.5 Military Specifications (MIL-SPECs) 5-4

5.2.6 Joint Service Specifications 5-5

5.2.7 JSSG-2009: Air Vehicle Subsystems Specification Guide 5-7

5.2.8 MIL-STD-882D, Dated 10 February 2000: "Standard Practice for System Safety" 5-9

5.3 Civil Specifications 5-9

5.3.1 Normal Category Rotorcraft 5-9
5.3.2 Transport Category Rotorcraft 5-13

6. FUEL SYSTEM CRASH-SURVIVABILITY EVALUATION 6-1

6.1 Postcrash Fire Potential Rating System 6-1

6.1.1 Spillage Control 6-3
6.1.2 Ignition Control 6-5

6.2 Fuel System Fire Hazard Level Reduction 6-7

6.2.1 Evaluation Criteria and Process 6-7
6.2.2 Example Fuel System Fire Hazard Level Evaluation 6-13

7. AC 29-2B DISCUSSION 7-1

7.1 Background 7-1

7.2 AC 29-2B, 29.952, General Comments 7-1
7.3 AC 29-2B, 29.952, Increasing the CRFS Capability 7-6

8. CONCLUSIONS 8-1

9. RECOMMENDATIONS 9-1

10. REFERENCES 10-1

11. BIBLIOGRAPHY 11-1

APPENDICES

A—Accident Investigation Forms
B—AC 29-2B Original Advisory Circular

LIST OF FIGURES

Figure Page

2-1 UH-1A Crash-Resistant Fuel System 2-9

2-2 Resistance to Tear for Tank Materials 2-10

2-3 Crash-Resistant UH-1D/H Fuel System 2-13

3-1 Percentage of All Helicopter Crashes That Are Survivable and Nonsurvivable 3-14

3-2 Severity Scale of All Helicopter Crashes 3-14

4-1 Frangible Type Self-Sealing Breakaway Valve 4-7

4-2 Quick Disconnect Valve Installed to Operate a Self-Sealing Breakaway Valve 4-7

4-3 Cable Lanyard Used to Transmit the High Load Required to Separate a Typical Self-Sealing Breakaway Valve 4-9

4-4 Cable Lanyard Used to Transmit Load to Pull Release Ring That Uncouples Quick-Disconnect Valve 4-9

4-5 Self-Sealing Breakaway Valve Used as a Tank-To-Tank Interconnect 4-10

4-6 Rollover Vent Valve Passes Air But Closes in Any Attitude When Fuel Tries to Escape 4-12

4-7 Sump Drain Valve Designed to Resist Opening or Damage During Crash Impact 4-13

4-8 Spillage Control Valve Designed to Stop Fuel Flow if Engine Quits or if Downstream Fuel Lines Separate 4-14

6-1 Hypothetical Helicopter Fuel System 6-9

LIST OF TABLES

Table		Page
2-1	Summary of Test Results—Full-Scale Crash Tests	2-7
2-2	Crash-Resistant Fuel Systems Fuel-Cell Material Comparison (Circa 1983)	2-15
3-1	Turbine Helicopter Accidents With Postcrash Fire	3-6
4-1	Crash-Resistant Fuel System Components	4-16
4-2	Factors Affecting Civil CRFS Design	4-17
6-1	Aircraft Survivability Hazard Rating	6-2
6-2	Postcrash Fire Potential Rating	6-2
6-3	Fuel System Fire Hazard Level—Unmodified Original	6-9
6-4	Fuel System Fire Hazard Level—Modified/Option A	6-15
6-5	Fuel System Fire Hazard Level—Modified/Option B	6-16

EXECUTIVE SUMMARY

This report presents the results of a study, funded by the Federal Aviation Administration (FAA), of helicopter Crash-Resistant Fuel Systems (CRFS). It covers the historical efforts that led to the current state of the art in military helicopter fuel systems and the more recent modifications to civil certification standards in Title 14 Code of Federal Regulations (CFR) Part 27 (Normal Category Rotorcraft) and Part 29 (Transport Category Rotorcraft).

It describes the basic research, testing, field investigations, and production efforts that have led to the highly successful CRFS, that have saved many lives and have reduced the costs of accidents. While the hardware and fabrics are available today to create the CRFS, the adequacy of the integration of these items into existing and new civil fuel system designs cannot be assessed because of the lack of current field investigation data on civil helicopter crashes. This report reviews this problem, including the forms used for reporting and the current level of available data, which is essentially nonexistent. Training of field investigators in specific crashworthiness technology is of great importance, as well as the need for trained engineers in the design and certification process.

A discussion of the civil and military crash environments is provided to give a background for the discussion of the need for re-evaluation of the rationale used in establishing the current civil regulatory standards. The value of full-scale crash testing during the early development of the military CRFS is reviewed. The lack of any planned tests for the CRFS in current civil helicopters is an area of concern.

A section of the study discusses the individual components of a CRFS, with guidance on the application of each item to the overall system design. This report provides guidance to designers looking for information about CRFS design problems and analytical tools for use in product improvements.

A summary of the changes currently taking place in the regulatory environment (specifications, standards, and regulations) for both military and civil rotorcraft development is included. This is also an area of concern.

This report provides information to the FAA and other governmental organizations that can help them plan their efforts to improve the state of postcrash fire protection in the civil helicopter fleet.

1. INTRODUCTION.

Postcrash fires account for a high percentage of injuries and fatalities in aircraft accidents that would, in the absence of such fires, be survivable. The successful development and implementation of crash-resistant fuel systems by the U.S. Army in its rotorcraft fleet has proven that technology is available to virtually eliminate fire fatalities in otherwise survivable helicopter accidents. The transference of this technology to civil helicopters has been slow in several decades since the Army implemented this technology. Although the level of crash resistance in some civil helicopters has been improved over the years, progress has been uneven.

The Federal Aviation Administration (FAA) funded several studies of civil helicopter crash resistance, primarily in structure, seats, and fuel systems, in the 1980s and early 1990s. In an effort to minimize fuel spillage and reduce the postcrash fire hazard, the FAA issued amendments to 14 Code of Federal Regulations (CFR) Parts 27 and 29 in 1994 requiring certain features be installed to improve fuel system crash resistance in civil rotorcraft.

The focus of this study is to assess the current crash-resistant fuel system (CRFS) technology and standards applicable to civil and military rotorcraft. Based on this assessment, changes necessary to further implement CRFS technology into the fuel system and fuel system components section of AC29-2B are recommended.

As the study progressed, it became clear that historical information regarding military CRFS technology and knowledge of the current CRFS technology can be combined to provide the civil fuel system designer with the necessary understanding of crash-resistant design principles to assist the civil designer in developing a truly crash-resistant fuel system. Design aids, in the form of evaluation techniques, as well as design principles, are also formulated to assist the design effort.

This report begins in section 2 with an analysis and summary of the history of military crash-resistant fuel system development and the implementation of CRFS technology into military and civil rotorcraft.

Section 3 reviews and analyzes the quantity and quality of available accident data for both civil and military helicopters. The roles that accident data and its collection play in CRFS development also are discussed.

The status of current CRFS design principles and technology is described and discussed in section 4, along with an assessment of CRFS implementation into civil and military helicopters. In addition to the discussion, tables are included that summarize the current status of CRFS design technology and related factors, as well as the level of implementation. These tables highlight those areas most in need of improvement.

Section 5 summarizes and analyzes military and civil standards applicable to CRFS for normal and transport category rotorcraft.

CRFS evaluation methods are contained in section 6. A rating system is described to evaluate the postcrash fire potential of any fuel system. This section also contains an evaluation

technique that can determine the relative "fire hazard level" for each fuel system component and/or hazardous area. This technique allows the designer to make optimum choices and trade-offs in the selection of designs and components.

Section 7 identifies a small number of modifications to AC29-2B that the authors believe more fully articulate the crash-resistant fuel system requirements of 14 CFR Part 29. If 14 CFR Part 29 is made more stringent at a later date, to further enhance survivability, the authors have also identified corresponding elements of AC 29-2B in which more stringent requirements must be added.

Conclusions of the study are presented in section 8.

Note: The research program embodied in this report does not attempt to evaluate the appropriateness of the severity level of the upper limit survivable accident established by the FAA for civil helicopters. Rather, the report attempts to document the history of the CRFS, and to suggest that further research and data collection should be undertaken by the FAA to consider increasing the severity level for the civil helicopter. While this report focuses on the CRFS in civil helicopters, it should be noted that the authors are unanimous in their opinion that the standards used to develop the military CRFS should continue to apply to new military CRFS programs, and that new research should be undertaken by the military to determine how much these standards should be raised because of enhancements in the design of survivability components (e.g., seats, restraint systems, airbags, etc.).

2. HISTORY OF HELICOPTER CRASH-RESISTANT FUEL SYSTEMS.

2.1 BACKGROUND.

The development of crash-resistant fuel systems for helicopters began 50 years ago with extensive testing and research conducted by National Advisory Committee for Aeronautics (NACA) now the National Aeronautical and Space Administration (NASA) and Civil Aviation Authority (CAA) the Federal Aviation Administration (FAA). This effort was precipitated by statistical studies of airplane accidents, which showed that those accidents with postcrash fires had a much higher fatality rate than those without fires. For instance, the 1946 statistics on U.S. air carrier accidents showed that two to three times as many people were killed in fire accidents as in nonfire accidents [1].

The increasing use of rotary-wing aircraft in military and civilian operations prompted similar studies to determine the hazard of postcrash fires in accidents with helicopters. A study of 1,317 major accidents involving both civilian and military helicopters showed that, although only 8.7 percent of the accidents resulted in fire, 60.4 percent of all the fatalities occurred in those fire accidents [2]. Similar results were found in an analysis of U.S. Army helicopter accidents from July 1957 to June 1960. Seven percent of the 579 accidents examined resulted in postcrash fires, but 63 percent of the fatalities occurred in those postcrash fire accidents [3]. This study also found that 78.5 percent of the postcrash fires could be attributed to ruptured fuel cells and/or fuel lines.

In September 1959, the U.S. Army Transportation Command funded a 1-year contract with the Flight Safety Foundation to conduct research, generally in fields related to Army Aviation Safety, with particular reference to crash injury and crashworthiness programs. The work was conducted largely by Aviation Crash Injury Research (AvCIR), a division of the Foundation in Phoenix, Arizona. This collaboration continued for over 10 years and resulted, among other crashworthy improvements, in the development, design, and installation of crash-resistant fuel systems in the entire fleet of U.S. Army helicopters.

2.2 DEFINING THE POSTCRASH FIRE PROBLEM.

2.2.1 Airplane Crash Testing.

Studies to define the causes of aircraft postcrash fires and the specific hazards such fires pose to the occupants began in 1924 during crash tests of United States Army DH-4 aircraft used to carry mail. By removing ignition sources from areas of anticipated fuel spillage, crash fires were prevented. While these and other efforts, such as the selective placement of fuel tanks, offered some help in reducing the postcrash fire problem, the first major scientific effort to address the problem in detail began in the late 1940s with several test programs conducted by the CAA and NACA in conjunction with the U.S. Air Force. NACA proposed in 1948 that full-scale crash tests be conducted to determine if the use of low-volatility fuel offers significant safety benefits over gasoline and to obtain further information on the origin and propagation of fire during crashes [1]. Subsequently, a series of 17 full-scale crash tests was conducted using low-wing and high-wing, twin-engine cargo transport airplanes. All the airplanes had reciprocating engines and most tests used gasoline, although some used low-volatility fuel. The tests were

structured to simulate a takeoff accident in which the plane fails to become airborne. The airplanes were accelerated along a guide rail under their own power, then released just before impacting an earthen barrier that tore off the landing gear and disrupted the engines and nacelles. The airplanes then struck embedded poles, designed to rupture the wing fuel tanks and slid along the ground until they stopped [4].

These pioneering tests showed that fuel spilled in liquid form from broken fuel lines and tanks formed a fuel mist around the plane while the plane was in motion. Depending on the nature of the aircraft deceleration phase, the fuel could be projected ahead of the slowing aircraft, it could surround the slowing aircraft, or it could trail the aircraft. Spilled fuel usually surrounded the aircraft wreckage after it came to rest. The mist generally dissipated within 2 to 17 seconds after the plane stopped, depending on wind speed. Ignition of the mist occurred in as little as 0.6 second after impact. Flames spread rapidly through the mist (as high as 45 ft/sec) as the flame front velocity was accelerated by the expanding burning mass of fuel and air. The tests also showed that the use of low-volatility fuel did not prevent ignition or fire.

Ignition sources determined during the tests were:

1. Hot surfaces (e.g., exhaust system, heat exchangers, etc.)
2. Friction sparks from abraded airplane metals
3. Engine-exhaust flames
4. Engine induction system flames
5. Electric arcs, electrically-heated wiring and lamp filaments
6. Flames from burning hydraulic fluid, engine oil, and alcohol
7. Electrostatic sparks.

NACA advocated in 1948 that efforts be continued on fuel system configurations and construction methods to contain fuel during a crash. An extensive test series was being conducted at this time by the CAA to determine the effectiveness of fixed-wing integral tanks and conventional bladder-cell tanks in containing fuel during crashes [5]. The test program consisted of three basic test series of wing sections, including fuel tanks. These tests were (1) deceleration, (2) impact, and (3) deformation. The first two test series were conducted with the tanks mounted on a carriage accelerated down a test track; the first with the tank rigidly attached to the carriage and the second with the tank catapulted from the carriage onto a flat sandbag surface. The deformation tests consisted of torsional and bending tests conducted in a test rig.

The results of these tests showed that, although integral tanks could withstand over 20 G's without leaking (resulting in fluid pressures of 30 to 40 psi), they had very low resistance to direct impacts. The tests showed that bladder cells were structurally weak and easily elongated. The investigators concluded that no fuel tank of the era had any significant crash-resistant capabilities and that no particular type of tank was best.

2.2.2 Helicopter Crash Testing.

The FAA had conducted six helicopter drop tests by 1959, but these tests were designed primarily to measure structural load factors during crashes [6]. The crash tests conducted by AvCIR for the Army in the early 1960s were the first designed to determine the behavior of

helicopter fuel systems during crashes. The first of what would eventually be over forty crash tests was conducted in October 1960 [7]. This test consisted of raising a twin-rotor, light-cargo helicopter (weight of 6,250 lbs.) 30 feet up in the air with a crane, driving the crane down a paved airport runway at 30 mph, at a designated point, releasing the helicopter to free fall to the runway, and impacting at velocities simulating severe but known survivable conditions. High-speed onboard and ground-based cameras documented the test and allowed visual analysis of events occurring during the crash. The test was designed to measure structural loads, seat restraint and test dummy loads, and to determine the performance of the regular fuel system and an experimental range extension fuel tank carried in the right-hand copilot's seat. The seats collapsed during the impact and the range extension fuel tank was ruptured in several places, resulting in large amounts of fuel spillage in and around the helicopter. The regular fuel system was not ruptured. More importantly, the test proved that this was a satisfactory and inexpensive method for crash testing.

Four more helicopter crash tests were conducted in the following year, all using the same test methodology as in the first test [2]. The basic purpose of these tests was to obtain acceleration and force data to help define the upper-limit survivable crash environment. This, in turn, helped the aircraft designer develop better components, such as seats, restraint systems, and fuel systems.

Meanwhile, in-depth investigations of U.S. Army helicopter accidents began in the 1950s and extended through the 1960s. Numerous U.S. Army accident investigations, coupled with full-scale crash tests, detailed some of the most common fuel system failures that occurred during helicopter crashes. These were

1. Many helicopter fuel tanks were located low in the structure and/or very near the outer surface of the aircraft, subjecting them to severe loads. Additional loads were often added by heavy cargo and, in some cases, by the engine or transmission. These loads caused the tanks to rupture during the crash.

2. The tank was punctured by jagged metal and broken components of the failing structure. When puncture coincided with the high-pressure loading of the tank, the fuel tank wall was torn. This tear progressed rapidly away from the wound.

3. Fuel tank fittings were torn from the tank wall as the airframe structure moved relative to the tank.

4. Fuel lines were cut, torn, or pulled apart if they were located in areas of displacing or failing structure.

From this knowledge, a system was developed to allow evaluation of the crash survival potential of a fuel system even though no accident record was available for that aircraft. Four crash tests were conducted on OH-4A and OH-5A helicopters after they were evaluated in flyable condition [8 and 9]. The fuel systems were re-evaluated after the crash tests and close correlations between the pretest and posttest evaluations occurred in every case. The authors concluded that a trained evaluator could reliably evaluate the crash-survival potential of an aircraft fuel system in the absence of accident data and that reliable estimates could be made even during the design

stages of a specific aircraft. This system has been further refined over the years. Today, it can be used to reliably estimate the crash survival potential, and to identify and evaluate intelligent tradeoffs in crash-resistant design. (See section 6 of this report.)

2.2.3 The Postcrash Fire Environment.

NACA was the first to investigate and quantify the postcrash fire environment and to determine available escape times based on this data [10]. The data was obtained from the full-scale airplane crash tests previously conducted and from supplemental burns of aircraft hulls. It included measurements of the radiant heat, ambient air temperatures, and concentrations of carbon monoxide (CO). Escape times were calculated from the measured data and known human tolerance levels. Escape time from thermal injury was based on occupant skin temperature, which resulted in severe pain and second degree burning. Escape times based on thermal injury varied from 50 to 300 seconds, depending on the position of the occupant in relation to the fire, size of the fire, and environmental conditions at the crash site. It was found that fuel volatility did not affect escape times when fuel mists, occurring in most aircraft crashes, was ignited. Escape time based on CO concentration was longer than for thermal injury, although the times did not differ greatly.

The first tests to quantify the postcrash fire environment in helicopters were conducted by AvCIR. These tests, along with accident reports and statistical data, indicated that the postcrash fire environment of helicopters was significantly different and more severe than that of fixed-wing aircraft [11]. Four cargo-type helicopters were crashed with colored water in the fuel tanks to obtain fuel spillage patterns. After these crashes, fuel was distributed around the crashed hulls in the same fuel spillage pattern and ignited. Ambient air temperatures and CO concentrations were measured inside the burning helicopters. The average escape time for this series of tests was only 17 seconds, based on human tolerance to inhaled hot air. Since crash tests and accident reports showed that postcrash fires in helicopters generally began during or shortly after impact, and tended to engulf the whole aircraft, skin temperature from radiant heat was often the limiting factor and the escape time was even shorter. Carbon monoxide was not a limiting factor in escape time because, although CO concentrations built up rapidly, they also dissipated rapidly because of the swift destruction of the fuselage by fire and the dilution of the CO concentration by air rushing in to replace the heated air, which was rising rapidly above the fire.

2.3 DEVELOPMENT OF THE CRASH-RESISTANT FUEL SYSTEM (CRFS).

2.3.1 Early Developments.

Following the dismal results of the FAA's wing fuel tank tests conducted in the late 1940s, the researchers concluded that any type of tank was safer if it was protected by heavier structure (e.g., the front spar) and located away from areas of structure prone to pronounced displacement during a crash (e.g., wing roots and landing gear) [5]. They also proposed the development of high strength and energy absorbing properties in flexible bladders as offering the most promising solution. They recommended the use of flexible fuel lines and breakaway self-sealing couplings at the firewall to prevent fuel line failure and the use of inertia operated shutoff valves at the fuel tank outlets.

The FAA embarked on a 10-year program, from 1950 to 1960, to develop improved crash-resistant fuel tanks and self-sealing breakaway valves for use in aircraft fuel systems. Accident reports and accident investigation data were studied to determine impact attitudes and load factors in severe but survivable accidents for both fixed-wing and rotary-wing aircraft. Based on this data and the data obtained during the previous wing tank tests, a resultant load factor of 35 Gs was recommended for the fuel tank design in a fixed-wing aircraft [6]. It was also proposed that crash-resistant fuel cells be equipped with accessories and components which would not tear the cell and which could seal the fuel inside the cell in the event of appreciable cell movement.

Six helicopter drop tests were conducted to furnish additional data for a rotary-wing aircraft [6]. The helicopters were dropped from a height of 26 feet, resulting in a vertical impact velocity of 41 ft/sec. Accelerometers measured structural loads and loads on crash dummies. The tests resulted in an average structural load factor of 32. The instrumented dummies indicated the impacts were survivable, although injuries could be expected. The investigators concluded that a resultant load factor of 35 was also justified for helicopter fuel systems.

Three of the drop tests were of helicopters with the fuel tank located in the bottom of the structure, underneath the two rear seats. In the first drop test, the bottom structure displaced upward of 4.75 inches (out of a total cavity depth of 16 inches). The conventional bladder fuel cell ruptured on impact and the fluid in the cell flooded the cabin interior. The two additional drop tests used self-sealing fuel cells made from material possessing a higher tensile strength. These cells did not rupture. The investigators concluded that, although previously thought to be impossible or at least impractical, it was feasible to design "squash-resistant" fuel tanks for helicopters.

During this timeframe, five different fuel cell materials, developed in a cooperative effort with the rubber manufacturers, were tested [12]. These materials were a composite, nonmetallic flexible construction made from elastomer-impregnated fabric arranged in layers or plies. Two types of tests were conducted: (1) strength and energy absorbing properties of material samples were determined using a compressed air gun and (2) impact tests were conducted of completed fuel cells mounted in two different simulated wing structures. The researchers found that the impact resistance varied linearly with the tensile strength and energy absorbing properties of the material and was affected greatly by the fuel-cell construction (e.g., diffusion barrier liners in the cell and reinforcement at vulnerable locations of the cell).

A method for calculating the tensile strength of crash-resistant bladder cell materials was developed based on the wing impact tests. The required tensile strength was determined by using a compressed air gun [13]. This entire effort ultimately resulted in the issuance of specification MIL-T-27422A for fuel tanks in 1961.

As the bladder-cell program neared completion, the FAA began a program to develop crashworthy safety valves and accessories for the new tanks. This program arose from the recognition that the ability of the fuel cell to remain intact as it moved during a crash was influenced by the accessories attached to it. It was concluded that crash actuated shutoff valves were needed at all cell openings and breakaway attachments to aircraft structure were needed for all fuel cell components and fuel cell hangers. Guidance for development of shutoff valves and

breakaway accessories were obtained from fuel cell fitting manufacturers, aircraft manufacturers, and fuel cell manufacturers at a conference sponsored by the FAA's Technical Development Center in the 1950s. After this conference, the Center designed, fabricated, and tested shutoff valves and frangible attachments to be used with the new crash-resistant fuel cells [14]. The results of 91 dynamic tests provided sufficient design and performance data to derive specification requirements for prototype valves and accessories.

In 1958, contracts were awarded to aircraft valve manufacturers for prototype breakaway valves and accessories. Valve assemblies were received the following February and tested [15]. As a result of this program, the Air Force prepared a specification for self-sealing breakaway valves (MIL-V-27373) that was issued in 1960.

2.3.2 Helicopter Fuel System Development.

The first extensive testing of the new crash-resistant fuel tanks occurred as a part of the U.S. Army-funded research conducted by AvCIR (Aviation Crash Injury Research, later to be known as AvSER or Aviation Safety Engineering and Research). Several fuel tank manufacturers had qualified fuel cells to MIL-T-27422A. Several of these cells were installed in two CH-21 helicopters, which were crash tested in October 1963 [16]. The first test helicopter was flown and crashed by a radio link remote control system. Impact velocities were 38.5 ft/sec longitudinal and 11 ft/sec vertical. The second helicopter was dropped from a mobile crane, impacting with a longitudinal velocity of 38.6 ft/sec and a vertical velocity of 36.8 ft/sec. The tanks were punctured in the low-limit crash and failed catastrophically in the more severe crash. These tests clearly showed that the current crash-resistant tanks, and the standards which governed their design, were not adequate. The vertical loading of the underfloor tanks had been underestimated. Puncture and tearing of the tank material from jagged metal and the pulling out of fuel tank fittings had not been addressed in MIL-T-27422A. It was apparent that resistance to puncture and tear propagation were equally as important as the material's tensile strength.

A cooperative effort with AvCIR engineers was undertaken with several fuel cell manufacturers to develop and test improved tank materials [16 and 17]. A large number of materials were screened and the most promising were tested for penetration and tear resistance using a chisel dropped onto a material sample and a pull test of material with a slit, respectively. Full-scale tanks for crash testing were then constructed from the most promising of these materials. These tanks, as well as typical aluminum tanks, standard aircraft bladder tanks and MIL-T-27422A tanks were tested in three fixed-wing and three helicopter crash tests conducted in 1964 and 1965. The fixed-wing (C-45) aircraft was accelerated along a monorail into a 35-degree barrier on the left and embedded poles on the right so that both wings suffered extensive damage. The helicopters (CH-34 and CH-21) were dropped from a mobile crane. The helicopter fuel tanks were located under the floor with rocks mounted beneath the fuselage or heavy cargo above the tanks. All were severe, upper-limit survivable crashes.

The test results are shown in table 2-1. All of the tanks tested exhibited massive failures except for those made by Goodyear ("tough wall" and "fuzzy wall") which showed good impact resistance. The tough wall material consisted of three to four plies of nylon cloth oriented at various angles and bonded together with a resin. The fuzzy wall tanks were made from a 3/8-inch-thick nylon felt pad with a variety of inner membrane sealing films or layers. The

investigators concluded that fuel tanks constructed of materials, such as those made by Goodyear, could provide excellent crash resistance at a reasonable weight. They also concluded that MIL-T-27422A was inadequate and should be revised to include provisions and tests for impact, penetration, and tear resistance.

TABLE 2-1. SUMMARY OF TEST RESULTS—FULL-SCALE CRASH TESTS

	LOCATION									
	WING				FUSELAGE		UNDERFLOOR			
Tank Type	No. Tests	Pole Impact	No. Tests	Wing-Tip Impact	No. Tests		No. Tests	No Cargo	No. Tests	1,000-lb. Cargo
"Pliocell"	0	-	0	-	3	3 Failed****	3	3 Failed	0	-
Crash Resistant***	0	-	0	-	2	2 Failed	0	-	0	-
Aluminum	2	2 Failed	2	1 Failed	0	-	1	1 Failed	0	-
Exp. Tank (A)**	0	-	1	No Failure	0	-	0	-	1	Failed
Exp. Tank (B)**	0	-	0	-	0	-	0	-	1	Failed
Exp. Tank (C)**	0	-	0	-	0	-	0	-	1	Failed
Self-Sealing	0	-	0	-	0	-	4	4 Failed	0	-
Net Tank	0	-	0	-	0	-	0	-	1	Failed*****
"Tough Wall" Hollow	2	No Failure*	2	No Failure	1	1 Failed	1	No Failure	1	Failed
"Tough Wall"/Honeycomb	1	No Failure*	1	No Failure	0	-	2	No Failure*	1	No Failure*
"Fuzzy Wall"	1	No Failure	0	-	0	-	0	-	1	No Failure

* Minor Seepage – One Tank
** Firestone Experimental Tanks
*** MIL Specification T27422A
**** Previous CH-21 Tests by AvSER
***** Spillage Approximately 1 gal./min.

Development of new fuel tank materials continued. The team of AvSER and Goodyear soon developed two new materials known as ARM-018 and ARM-021 [18]. Both were laminates using woven ballistic nylon cloth impregnated with a urethane elastomer. The typical crash-resistant cell then in use had a tear strength that was only nine percent of the tear strength of ARM-021.

In 1966, Goodyear Aerospace, The Aeroquip Corporation, E. B. Wiggins Corporation, and AvSER, working together, began a comprehensive program to improve the crash resistance of U.S. Army helicopters and to extend the crash resistance of the new, improved fuel cells to the entire fuel system. The fuel systems of four U.S. Army helicopters (UH-1B, UH-1D, CH-47, and OH-6A) were analyzed and evaluated using design drawings, inspections of as-built aircraft, and available accident records [19]. Components analyzed included fuel cells (location, shape, and installation), fuel cell components and their attachments (drains, vents, filler necks, and boost pumps), and the fuel transfer system (fuel cell interconnects, fuel lines, and fuel line fittings). The electrical systems and other potential ignition sources also were evaluated. Recommendations were made for improving the crash resistance of all four helicopter fuel

systems. These recommendations included, among others, the use of the new crash-resistant fuel tanks, frangible attachments for all fuel tank components which had to be attached to the aircraft structure, flexible fuel lines, stronger fuel line fittings, and self-sealing breakaway valves at all tank outlets and at high-risk locations in the fuel lines.

A fuel system fire hazard level reduction technique was developed to assist the fuel system designers, working in conjunction with crash investigators, trained in fuel system crashworthiness investigation, in estimating the relative fire hazard of a given fuel system design. This engineering tool allowed the designers to evaluate various fire threat remedies in an effort to select the one most suited to achieve the desired results (see section 6 of this report).

In addition to the fuel system analyses, a comprehensive testing program was conducted on currently available aircraft fuel lines and fittings. Static tension and shear tests were conducted on both aluminum tubing and flexible, steel-braid covered hose. All common sizes of standard (AN) fuel line fittings (straight and elbow) were tested in conjunction with the related hoses and tubing. It was found that aluminum tubing and smaller aluminum fittings were unsatisfactory for most crash-resistant systems.

Meanwhile, prototype frangible attachments for fuel-cell components were fabricated and subjected to extensive testing [19]. Results showed that plastic inserts in the metal attachment fittings could be readily developed for any application.

Since no self-sealing breakaway valves were commercially available, quick-disconnect valves in use at the time were modified for use in tank outlets and in-line applications. These valves underwent an extensive series of static and dynamic tests and performed well under a wide range of conditions. This effort showed that a high degree of protection was possible with this type of valve and that the development of specifically designed self-sealing valves was feasible. The investigators also determined that MIL-V-27393A was inappropriate for self-sealing breakaway valves because it was too specific and restrictive in design.

The first crash test of a complete crash-resistant fuel system was conducted by AvSER early in 1968 [20]. A UH-1A helicopter was equipped with crash-resistant fuel, oil, and electrical systems. The system included (1) special crash-resistant fuel tanks and a felt-covered oil tank, (2) flexible fuel and oil lines in areas where rigid metal lines characteristically failed, and (3) self-sealing breakaway valves and fuel and oil line disconnects at strategic locations to allow for relative displacement of aircraft components. A diagram of the crash-resistant fuel system is shown in figure 2-1. The self-sealing breakaway valves in the fuel lines were modified with quick-disconnect valves. The breakaway valves installed in the tanks at the aft crossover tube outlets were prototype valves made to safely separate by actually fracturing portions of the valve when crash forces were great enough, allowing each side of the valve to close. These "one shot" valves were made by the participating valve manufacturers to meet AvSER specifications. All of the individual crash-resistant fuel system components had been extensively tested beforehand by both static and dynamic tests.

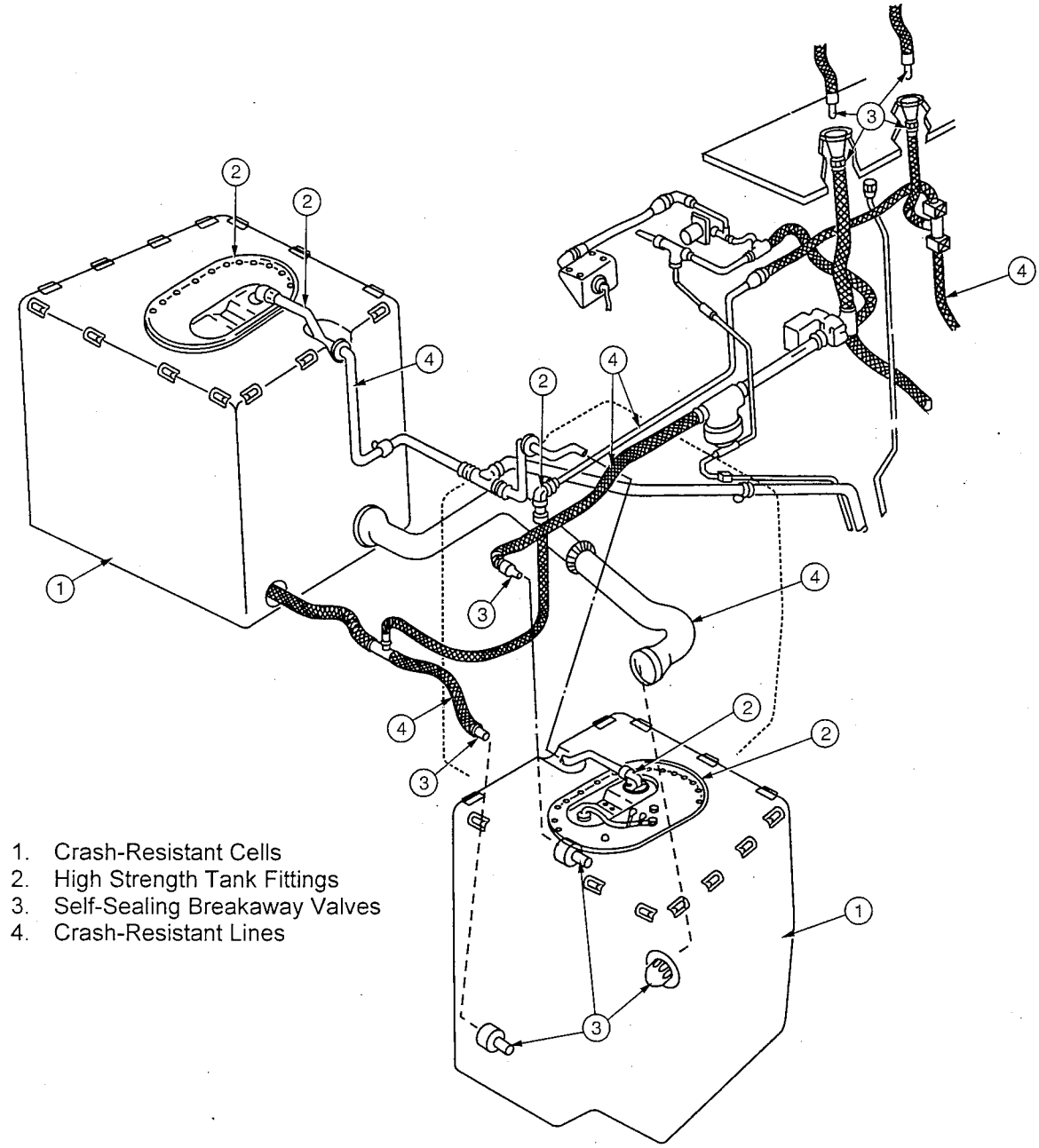

FIGURE 2-1. UH-1A CRASH-RESISTANT FUEL SYSTEM

The helicopter was remotely flown to a severe, upper-limit survivable impact, experiencing a longitudinal velocity of 81 ft/sec and a vertical velocity of 23 ft/sec. The impact angle was 15.5 degrees. All of the systems functioned satisfactorily and there was no fuel or oil spillage.

2.3.3 Implementation of CRFS in Military Helicopters.

The implementation of CRFS technology proceeded along two complementary paths. One path was the preparation of design guides and specifications incorporating the new technology and the

other was the actual design and installation of crash-resistant fuel systems in U.S. Army helicopters.

In 1965, the U.S. Army initiated, under its contract with AvSER, a project to consolidate the knowledge and design criteria published in the previous AvSER reports into one report. This report summarized state-of-the-art crashworthy technology and included pertinent work conducted by other agencies in addition to AvSER. This report was published in 1967 as the "Crash Survival Design Guide" [21]. The Design Guide, as it came to be known, included all aspects of crashworthiness (aircraft crash survival impact conditions and design pulses, airframe crashworthiness, seat and restraint harness design criteria, occupant environment criteria, emergency escape provisions, and postcrash fire safety). The section on postcrash fire safety was devoted primarily to the design of crash-resistant fuel systems. Some design criteria were presented for ignition source control, such as de-energizing electrical sources, inerting hot surfaces, and shielding wires and electrical components. A brief discussion of the postcrash fire environment as related to human tolerance and escape times also was presented.

The criteria for crash-resistant fuel systems included a detailed analysis of MIL-T-27422A and showed why the cut and tear resistance of the fuel tank material was vital to its survival during a crash. Properties of the new materials were presented along with those of then standard materials, as shown in figure 2-2. The areas under the curves in figure 2-2 denote the energies necessary to fail these materials. The newer materials absorbed 8 to 12 times more energy than the MIL-T-27422A material.

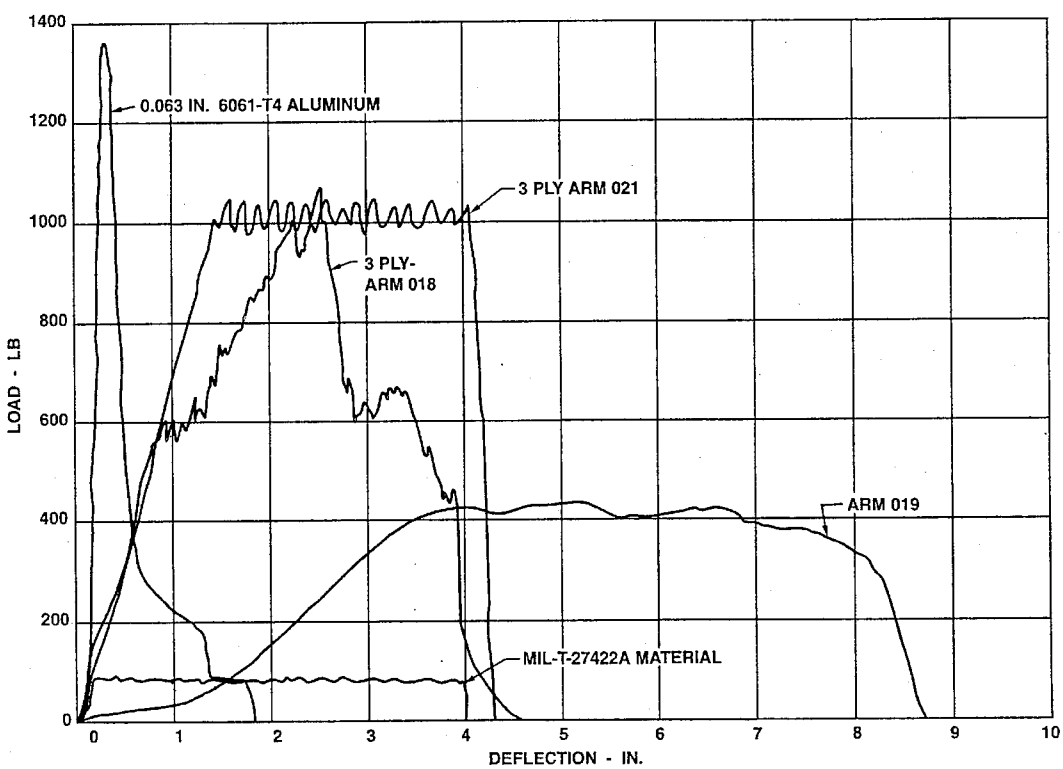

FIGURE 2-2. RESISTANCE TO TEAR FOR TANK MATERIALS

The Design Guide also stressed the interaction of the fuel system components and aircraft structure during the crash. Since failure of the tank was often caused by the tearing of the tank wall around the attachments, as the tank moved in relation to the surrounding structure, the use of frangible attachments and self-sealing breakaway valves was specified. Protected locations for fuel lines, extra length in the lines, and the use of flexible hose with a braided steel covering were recommended.

The Design Guide was updated to include research completed by AvSER (now a division of Dynamic Science) and Goodyear through January 1969 [22]. Major additions to the CRFS design criteria included examples of high-strength fuel tank metal insert retention methods and the requirement that the inserts have a retention strength of at least 80 percent of the tank wall strength. Drawings showing different applications of self-sealing valves also were included along with the requirement that such valves, as well as all frangible attachments, should separate at less than 50 percent of the load required to fail the attached component. In addition, the vent system design was expanded to prevent vent-line failure or spillage during tank compression or a rollover. Minimum loads for fuel line fittings were also specified.

Additional research and testing of fuel tanks resulted in the formulation and publication of MIL-T-27422B in February 1970 [23]. The specification was completely revised and included new requirements to ensure the fuel tanks would, indeed, be crash resistant. In addition to laboratory tests of the fuel tank material, to measure the puncture and tear resistance, tests were also required to assure satisfactory tank fitting retention strength. Perhaps the most important change was the inclusion of dynamic testing of the completely configured fuel tank by dropping it, filled with water, onto a flat surface from a height of 65 feet.

The research, design, and testing involved for the development of the UH-1D/H helicopter CRFS (begun in 1968) yielded much more knowledge about design criteria for crash-resistant fuel systems and their components. Accordingly, the Design Guide was revised again in 1971 [24]. Extensive additions were added in all areas, including that section devoted to CRFS design. Requirements from MIL-T-27422B were added, including the 65-foot drop test of the fuel tank with no leakage. Test methodology was included to assure tank fitting retention strength of 80 percent of tank wall strength. Requirements for the separation loads of frangible attachments and self-sealing breakaway valves specified that the attachments and valves must meet all operational requirements, but should separate at 25 to 50 percent of the load required to fail the attached system or component. Methods of analyzing and calculating the force in the most likely direction of occurrence during impact were presented. Criteria for the self-sealing valves stated that the valves should be specifically designed for a "one shot" emergency breakaway function. Additionally, minimum loads were required for fuel lines and their fittings and test methods were specified. This edition of the Design Guide was the basis for the criteria contained in MIL-STD-1290 released in January 1974 [25]. The Design Guide has since been revised and expanded with twice as much knowledge available in all areas of crashworthiness. The latest revision was published in 1989.

The parallel effort to design and install crash-resistant fuel systems in U.S. Army helicopters began in 1968, when the U.S. Army committed itself to markedly reducing postcrash fires in survivable helicopter accidents. Dynamic Science then began a program for the U.S. Army to

integrate a CRFS into the UH-1D/H helicopter, manufactured by Bell Helicopter Company [26 and 27]. The effort began by studying UH-1D and related accident cases to determine problem areas. The fuel system also was evaluated by the previously developed rating system (which had been expanded to include a more detailed process) to determine the overall fire hazard attributable to specific fuel system components. Crashed, but intact hulls provided data for dimensions, possible interferences, and general system layout. As work progressed, a close liaison was maintained with the Bell Helicopter engineers and component suppliers. The design used many off-the-shelf items, but some items (which were only laboratory specimens at the beginning) had to be designed and built by various suppliers, then tested for operational and crashworthy acceptability. Almost 700 static and dynamic tests were conducted to assess the crash effectiveness of the various components in the fuel system.

The UH-1D/H crash-resistant fuel system is illustrated in figure 2-3. The CRFS consisted of five interconnected MIL-T-27422B fuel tanks and tank outlets; self-sealing breakaway valves at the most vulnerable tank outlets; flexible steel-braid covered hose with in-line breakaway valves at probable failure points; and frangible connectors at tank-to-structure interfaces (tank components and hangers). Three full-scale crash tests were conducted with helicopters containing the CRFS; one vertical drop and two by allowing the helicopter to free fall down an inclined cable, all onto irregular terrain consisting of several large rocks and a stump. Overall, the fuel system performed as designed, however, several plumbing components allowed a small amount of leakage. The fuel tanks safely contained their contents throughout the test programs. The UH-1D/H crash-resistant fuel system was judged to be highly resistant to failure in survivable accidents.

In April 1970, with the component leakage problem resolved, the first UH-1H helicopter with a CRFS came off the production line and all subsequent production helicopters were equipped with the CRFS. The manufacturers of the other military helicopters, i.e., Boeing, Sikorsky, Hughes and Bell, started designing crash-resistant fuel systems for their helicopters using consulting input from the AvSER group of Dynamic Science, and past AvSER employees who had joined the Robertson Research Group at Arizona State University. An extensive retrofit program was also begun to equip already manufactured helicopters with a CRFS.

A study conducted by the U.S. Army of helicopter accidents, from 1970 through mid-1973, showed that the crash-resistant fuel system performed remarkably well [28]. There were no thermal injuries or fatalities in any of those helicopters equipped with a CRFS. A later study of U.S. Army helicopter accidents, from 1970 through 1976, corroborated the outstanding performance of the crash-resistant fuel systems [29]. Data from this study showed that the CRFS had reduced thermal injuries by 75 percent and had eliminated thermal fatalities. The investigators concluded that the CRFS "..... has been shown to be a highly successful and operationally effective mechanism."

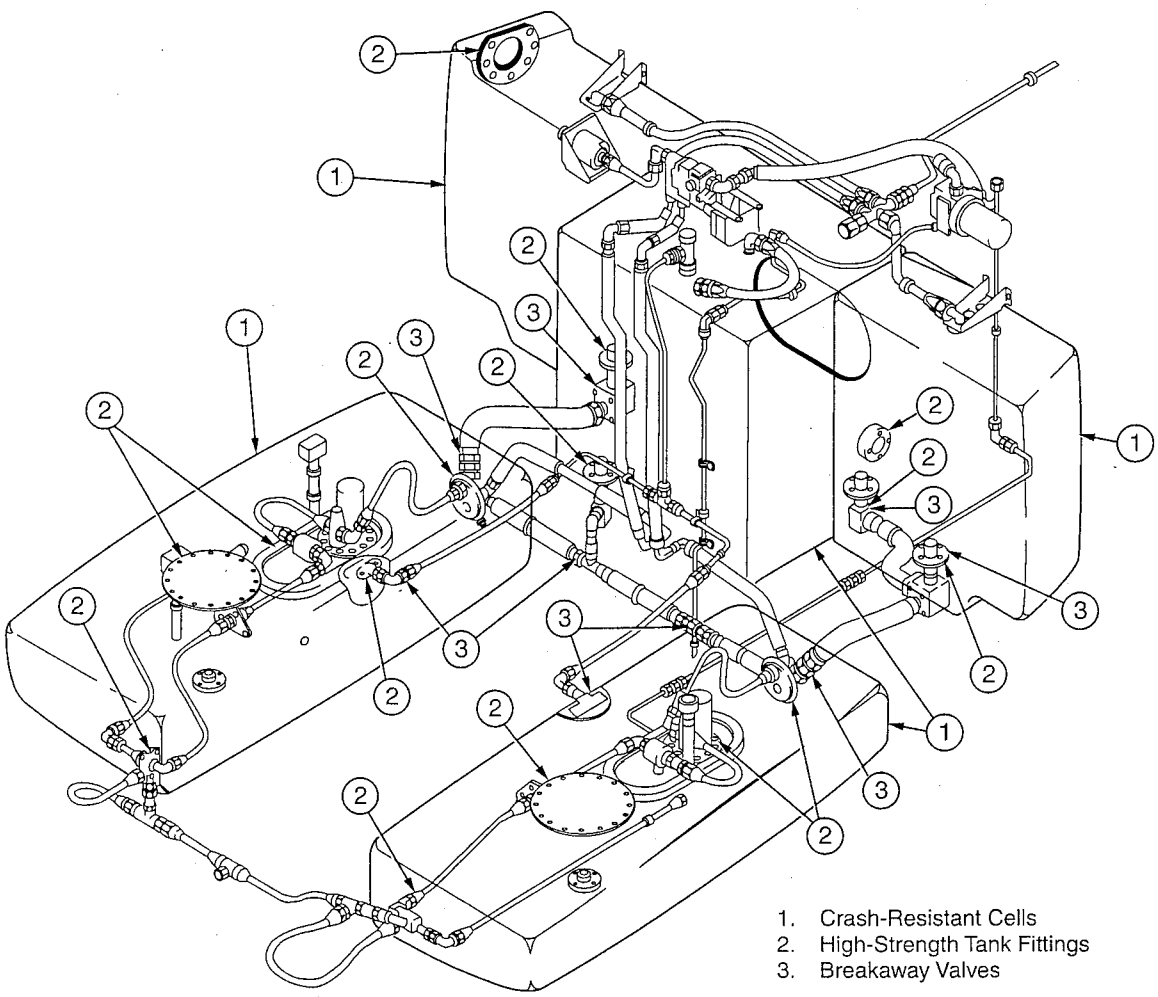

FIGURE 2-3. CRASH-RESISTANT UH-1D/H FUEL SYSTEM

2.3.4 Crash-Resistant Fuel System in Civil Helicopters.

In 1975, researchers who had been instrumental in developing the CRFS for military helicopters concluded that the next logical step was to provide postcrash fire protection to the civilian aviation industry and that no new scientific breakthroughs would be necessary to do this [30]. Shortly thereafter, at least one manufacturer was planning to incorporate some CRFS technology into one of its civil helicopters [31]. This twin-engine, eight passenger helicopter was first flight tested in 1976 and scheduled for delivery in 1979 (actual delivery started early in 1980). The helicopter contained four crash-resistant fuel cells—two in the sponson structures and two in the fuselage, just aft of the passenger compartment. The attaching sponson fuel and vent lines incorporated self-sealing breakaway fittings at the junctures of the sponsons and fuselage. The fuel cells, though not as crash resistant as MIL-T-27422B fuel cells, had improved cut, fitting pull out, and tear resistance, and had passed a 50-foot drop test. They were a marked improvement over the regular bladder cells previously in use.

By 1986, the Aerospace Industries Association of America (AIA) had established a Helicopter Crashworthiness Project Group to determine if crash safety improvements were needed for future civil helicopters. This group concluded that "Energy attenuating seats with shoulder harnesses and a crash-resistant fuel system are significant crash safety improvements that can be made for future civil helicopters ...." [32]. They also called for lower crash-resistant requirements for the fuel system since they believed the civil survivable crash environment was not as severe as the military's. They recommended that the test methods of MIL-T-27422B be used but with lower criteria, e.g., a drop height of 50 feet (56 ft/sec) with the fuel tank only 80 percent full of water. They also determined that the CRFS should tolerate displacement between components due to structural deformation during a crash and, that stretchable hoses, extra length hoses, self-sealing breakaway valves, and frangible fuel cell attachments might be needed.

The criteria recommended by the committee for crash-resistant fuel tanks in civil helicopters is shown inside the heavily-lined area of table 2-2. This table shows the range of fuel-cell bladder material in use at the time. (Uniroyal and FPT are shown because their data was immediately available, but other manufacturers also made fuel cell materials in the same range.) Most civil helicopters flying then were using material similar to the standard bladder material shown on the left of table 2-2, but the author reported that nine models of civil helicopters did incorporate some degree of crash resistance in their fuel systems by 1986.

It is doubtful that the fuel-cell drop tests reported in table 2-2 included the surrounding aircraft structure. The low-tear resistance and puncture resistance of some of the materials tested as compared to that of the MIL-T-27422B materials (shown on the right of table 2-2) could compromise the integrity of the fuel cell during a crash in which the cell wall must bridge a gap in the surrounding structure caused by structural displacement during a crash. If the cell wall comes in contact with sharp objects or torn structure at this time, it would be very vulnerable to puncturing and tearing. This type of failure was discovered early in the development of crash-resistant fuel systems and has been discussed at some length in the literature [16 and 21]. Certainly, the crash experience of the military helicopters, both with and without crash-resistant fuel systems, as well as the numerous helicopter crash tests conducted over the years, substantiate the need for high levels of puncture and tear resistance of fuel-cell materials in all helicopters.

A study conducted for the FAA in 1994 reported that ten models of civil helicopters incorporated some degree of crash resistance in their fuel systems at that time [33]. The primary purpose of this study was to identify levels of crash resistance that could be incorporated into civil helicopters in different areas, including the fuel system. This study also recommended a 50-foot drop test for the fuel cell versus the 65-foot drop required by the military.

Design configurations proposed for civil helicopter CRFS included: crash-resistant fuel cells; flexible, steel-braid covered hose for fuel lines; self-sealing breakaway valves where the fuel line passes through the firewall and at other locations where necessary (e.g., tank outlets, and tank cross-feed lines); frangible attachments for all tank component-to-structure attachments; suction fuel feed; and means of preventing fuel spillage through the vents. The development of CRFS had matured enough that the study report was able to list manufacturers of crash-resistant fuel cells, fuel lines, and self-sealing breakaway valves for the civil aircraft industry. However, as of today, there still have not been any full-scale crash tests of helicopters incorporating CRFS built to the new Part 27 and 29 Regulations to verify that the requirements of the new regulations are appropriate.

TABLE 2-2. CRASH-RESISTANT FUEL SYSTEMS FUEL-CELL MATERIAL COMPARISON (CIRCA 1983)

Test/Description	Standard Bladder US-566RL	Safety Cell US-770	Safety Cell US-756	FPT** FPT/ CR.615	Military MIL-T-27422B US-751
Drop Height with No Spillage (ft)	NA	50 (80% Full)	50* (80% Full)	65 (Full)	65 (Full)
Constant Rate Tear (ft-lb)	NA	400	210.0	42	400
Tensile Strength (lb)					
Warp	140	168	1717	NA	NA
Fill	120	158	1128	NA	NA
Impact Penetration (5 lb Chisel)					
Drop Height (ft))					
Parallel/Warp	NA	1.2	8.5	10.5	15
45° Warp	NA		8.5		15
Screw Driver (lb)	25	333-446	370.5	NA	NA
Material Weight (lb/ft^2)	.12	.36	.40	.55	1.04
Weight Increase Factor	1.0x	3.0x	3.3x	4.6x	8.7x

* Also dropped from 65 FT with no spillage
** 350% Elongation

3. ACCIDENT DATA.

3.1 MILITARY HELICOPTERS.

The incorporation of helicopters into military operations occurred during the Korean conflict, 1950-1953. These were mostly small, reciprocating-engine-powered craft, and were designed for the lightest possible airframe and system weight. Very little attention was paid to crashworthiness in these early years, either in design or in accident investigation.

One of the earliest studies of rotary-wing accident experience involving fire was by the U.S. Army Board for Aviation Accident Research (USABAAR) in 1960, based on accidents from 1957-1960 [34]. An attempt was made to assess the costs and effects of postcrash fire. Under contract to the U.S. Army Transportation Research Command (TREC), the Flight Safety Foundation's AvCIR also reported on the crashworthiness aspects of several helicopter accidents during this time frame [35].

These studies resulted in increased emphasis on developing a database of crashworthiness information from military accident investigations. The first five formal classes for military crash injury investigators were conducted in 1960. An outline of the first handbook for Crash Survival Design Criteria also was prepared in this time period. However, it was not until 1975 that the current formal U.S. Army investigative data collection procedures were established, and in 1978 major investigations began to be conducted by teams from the U.S. Army Safety Center, which included trained crashworthiness investigators. This resulted in improvements in both the quantity and quality of the crashworthiness data collected.

CRFS were incorporated into U.S. Army rotary-wing aircraft beginning in 1970, accident data from these aircraft have established the value of crash-resistant specifications and design features. A "Summary of U.S. Army Crashworthy Fuel Systems Accident Experience, 1970-1973," [28] showed that for rotary-wing aircraft without CRFS, there was a fire in 1 out of 11 mishaps, while with the CRFS, fire occurred in only 1 in 50 mishaps. During this period, there were no fire injuries or deaths in helicopters with CRFS. Seventeen years elapsed (1970-1987) before the first thermal fatality in a CRFS equipped aircraft.

In 1989, Shanahan and Shanahan reported on the kinematics of helicopter crashes [36]. This paper updated the impact kinematic parameters from accident reports of rotorcraft that were designed to the earlier Crash Survival Design Guide data, and noted significant changes. This work was possible because the U.S. Army investigators have been trained and are now required to collect these impact parameters.

Shanahan also reported on the experience of the Black Hawk helicopter, the first designed and built to modern crashworthiness standards. In the first 11 years of service, "The Black Hawk has proven itself to be highly crash survivable even in impacts up to 18.3 m/s (60 ft/s) vertical velocity" [37]. This report confirms that the most important factor in crash survival in helicopters is prevention of postcrash fires, but the other factors are also significant, as the benefits of a CRFS "... would be severely mitigated if occupants were fatally injured by collapsing structure or by failure of seats... ." In these 11 years, there was not a single fatality due to thermal injury in the Black Hawk, in spite of its higher accident rate and higher impact

velocities. The report noted, "In several cases, the fuselage has ruptured allowing the fuel cells to separate from the aircraft without significant spillage."

In a 1994 unpublished study of U.S. Army mishap reports [38], there were no accidents, injuries, or aircraft damage due to failures of crash-resistant frangible fuel line couplings installed in U.S. Army helicopters in the 22 years from 1972 through 1993. There were 11 reports of shutoff events, six attributed to maintenance error and one to an overstressed coupling. This data produced a fuel shutoff event rate of one per 2.5 million flight hours. During this study, three manufacturers of these couplings were contacted and they reported no claims of in-flight activation in any military units they had delivered.

The following recent accident summaries from U.S. Army files show the effectiveness of CRFS. There were no postcrash fires in these accidents.

- UH-60L

  The accident occurred during the conduct of a daytime visual flight rules flight at 120 feet AGL and 100 knots. The UH-60L descended during a 60° to 70° bank-angle turn and crashed through 15-foot-tall jungle undergrowth and hardwood trees. The aircraft was destroyed. The two passengers were fatally injured and the three crewmembers were seriously injured.

- AH-64A

  The training accident occurred during a night terrain flight at 100 knots and 70 feet AGL, with the crew using a target acquisition designation system/pilot night vision system. The aircraft struck and descended through approximately 70-foot-tall pine trees to ground impact. The aircraft was destroyed and both crewmembers received major injuries.

- UH-1V

  During 90-knot cruise flight about 1,820 feet AGL, the UH-1V nose abruptly pitched down 30° to 40° and the aircraft yawed right. Even with both the pilot in command (PC) and the pilot on the controls (PI), only minimal control could be maintained. The aircraft descended in a right turn to ground impact in a left-side-low, nose-low attitude. The aircraft was destroyed and the PC, the PI, and the medical attendant received serious injuries.

In summary, the military history of CRFS is outstanding. The systems work as designed, fires are prevented in survivable accidents, lives are saved, and injuries reduced.

3.2 CIVIL HELICOPTERS.

Civil helicopters became available immediately after WWII, with the first civil certifications in the late 1940s. They were certified to Civil Aeronautics Board (CAB) standards that did not mention crashworthiness and had minimal impact force survivability requirements.

One of the earliest studies of the helicopter crash fire problem [39] reported that fire occurred in 8.7 per cent of helicopter accidents and 60.4 per cent of all fatalities occurred in these fire accidents. Reviews of accident reports during this time frame showed a lack of data on impact parameters, but some general conclusions were available that showed that many were at high vertical impact angles. Some specific accidents were reviewed, and a few drop tests of helicopters were conducted to obtain more data [6].

In 1978, Richard G. Snyder studied civil helicopter accident records from 1964-1977 and concluded that: "Detailed investigations of impact injuries have not been conducted in civil helicopter accidents..." and "because of this lack of attention to occupant protection and crashworthiness, no large body of statistical data is available for analysis of the nature, site, and frequency of injuries" [40].

In 1980, the National Transportation Safety Board (NTSB) published a special study "General Aviation Accidents: Postcrash Fires and How to Prevent or Control Them" [41]. In this study, it reviewed the history of postcrash fire prevention efforts, surveyed the state-of-the-art technology, and showed how the U.S. Army efforts had succeeded in reducing helicopter fire deaths by the application of techniques in the Crash Survival Design Guide. It also reviewed the minimal regulatory provisions dealing with postcrash fire and made six recommendations to the FAA for corrective action. They were

- "Amend the airworthiness regulations to incorporate the latest technology for flexible, crash-resistant fuel lines, and self-sealing frangible fuel line couplings at least equivalent in performance to those used in recent FAA tests and described in Report No. FAA-RD-78-28 for all newly certificated general aviation aircraft. (Class II, Priority Action) (A-80-91)"

- "Amend the airworthiness regulations to incorporate the latest technology for light weight, flexible crash-resistant fuel cells at least equivalent in performance to those used in recent FAA tests and described in Report No. FAA-RD-78-28 for newly certificated general aviation aircraft having nonintegral fuel tank designs. (Class II, Priority Action) (A-80-91)"

- "Require after a specified date that all newly manufactured general aviation aircraft comply with the amended airworthiness regulations regarding fuel system crashworthiness. (Class II, Priority Action) (A-80-92)"

- "Fund research and development to develop the technology and promulgate standards for crash-resistant fuel systems for aircraft having integral fuel tank designs equivalent to the standards for those aircraft having nonintegral fuel tank designs. (Class II, Priority Action) (A-80-93)"

- "Assess the feasibility of requiring the installation of selected crash-resistant fuel system components, made available in kit form from manufacturers, in existing aircraft on a retrofit basis and promulgate appropriate regulations. (Class II, Priority Action) (A-80-94)"

- "Continue to fund research and development to advance the state-of-the-art with the view toward developing other means to reduce the incidence of postcrash fire in general aviation aircraft. (Class II, Priority Action) (A-80-95)"

In the 20 years that followed, not one of these recommendations was implemented for fixed-wing aircraft, and the first two were partially implemented for helicopters in 14 CFR Parts 27 and 29.

As the FAA began to seek data in preparation for regulatory changes regarding crashworthiness following the NTSB study, another detailed review of civil helicopter accident data was conducted from 1981 to 1985 [42]. This study reviewed 1351 accident files from 1974 to 1978 and found that over 1,000 cases had insufficient data to determine impact conditions. Cases where there was pending litigation were also omitted from the sample. This left 311 cases in the sample. One hundred of these were determined to be not survivable, or of unknown survivability. Impact data was derived from 154 of the remaining "significant survivable" accidents, which occurred during that time frame. The balance of 57 cases were low severity accidents. No field investigations were performed during this study, and in many cases, only photos and witness statements were used to estimate data in the absence of specific reported data. It is clear from this report that accident investigation data collection for crashworthiness evaluation is severely lacking. One of the recommendations in this report was to improve the NTSB data collection procedures. This has not been done. Despite the deficiency of substantiated data from which the authors estimated the 95th percentile survivable accident envelope, they nevertheless extended their impact protection criteria to all civil helicopters, including those weighing more than 12,500 lbs.

The 95th percentile accident impact conditions based on this report, and used in developing the criteria for the current CRFS regulations, are not based on the kind of data that should be used for this purpose. While a great degree of effort went into this report, to fill in the blanks in the accident files, the post hoc character of the study, and the large number of accidents not included in the analysis, does not provide the degree of confidence needed to insure that a proper engineering basis exists for the current standards.

Current NTSB and FAA computerized accident data files do not contain any specific code for postcrash fire. For this present study, NTSB and FAA files of helicopter accidents were searched for the words "fire" and "burn" in the text, for the period 1983 to present. For pre-1995 accidents, the microfiche files were read at the NTSB and cases with clear indications of postcrash fire were copied. For more recent years, the NTSB and FAA web sites were used to print out available data on fatal helicopter accidents, and the files were reviewed and studied on the NTSB computer for postcrash fire information. No attempt has been made to do statistical analysis of postcrash fire rates from this information because insufficient data exists. However, a partial list of typical accidents to turbine powered helicopters in the U.S. over the past 17 years is included (table 3-1) to show that the postcrash fire problem still exists. Although there were many additional cases of reciprocating powered rotorcraft having postcrash fires, these are not included in the table because the study focused on turbine-powered helicopters. Detailed descriptions of injuries, crash damage, CRFS configuration, and fuel and ignition sources are largely ignored by civil accident investigators. Until such time as these data are collected

regularly and accurately, it will be impossible to verify or validate the efficacy of CRFS applications in civil rotorcraft to any degree of reliability.

The general practice for the NTSB in helicopter accidents is to do a "limited" investigation, i.e., a phone call from the investigator's desk, if the accident is not fatal, regardless of whether postcrash fire occurred. If fatal, the FAA is often delegated to do the field work. Specific qualifications in crash-fire investigation is not a requirement for investigators, although some have been trained by the FAA or by attending various schools. All of these factors seem to be budget driven decisions.

It has been reported that some helicopters have been built with fuel systems designed to the latest CRFS requirements in 14 CFR Parts 27 and 29 [42]. In an attempt to determine if this data was being collected for these newer aircraft, all known fire accidents of these aircraft were extracted from the NTSB files and examined. In no case was there a specific evaluation, and rarely an acknowledgement of the CRFS in the public record. Although it is likely that manufacturers possess data that would confirm the CRFS configuration of accident aircraft, it is not explored by either the NTSB or FAA, and would not be released by manufacturers to the authors of this study. Thus, there is no data available in NTSB records for this study to evaluate the effectiveness of the current CRFS regulations.

In addition, some fire accidents shown in table 3-1 were ex-military UH-1 aircraft. There was no indication in the docket whether these aircraft had the military CRFS, whether these systems had been maintained as such, or modified with non-CRFS parts, but the aircraft burned in accidents similar to military accidents where a fire would not be expected. No discussion of fuel system details was included in these reports.

Nineteen helicopter accidents in the U.S. during 1999 were identified, which involved aircraft with CRFS installed. These accidents did not have a postcrash fire. Most of these were not fatal and received a limited investigation (i.e., were not investigated). Current NTSB and FAA investigation methodologies do not elicit valuable data about the effectiveness of CRFS technology from accident events.

In 1996, the rotorcraft fatal accident rate was 1.67 per 100,000 hours flown, which is slightly higher than the overall general aviation fatal accident rate of 1.45. There were 29 fatal accidents with 43 fatally injured occupants. No data were available on fire injuries or fatalities [43].

TABLE 3-1. TURBINE HELICOPTER ACCIDENTS WITH POSTCRASH FIRE

DATE	LOCATION	TYPE	CLASS	FATAL	SERIOUS	MINOR/ NONE	TOTAL	SURVIVABLE	DETAILS
830322	SALINAS, CA	B206B3	N2	1			1	U	CFIT, BRIEF FIRE NOT SUSTAINED
830813	TOUTLE, WA	FH1100	N3	5			5	N	CFIT, TREES
831018	HUDSON, NH	B206B3	N2	1			1	U	STEEP DESCENT INTO PARKING LOT, REPORTED NO CRFS
831028	SALT LAKE, UT	SE3180	N3			4	4	Y	UNCONT. IMPACT ON MT, TUMBLED DOWN 200'
840503	TRAMMEL, VA	B206B	N3		1		1	Y	WIRE STRIKE, PILOT THROWN OUT BEF. FIRE, GOOD DATA
840718	MESA, AZ	H369D	N3	2			2	N	MR DISCONNECT,
840724	DALLAS, TX	B206B	N3	2			2	N	TOWER STRIKE, LONG FALL
840824	STRAWBERRY, CA	AS355E	N3			1	1	Y	LOUD BANG, SPUN LEFT, HIT TAIL
840901	KNOXVILLE, TN	B222	T1		1	4	5	Y	LOST RPM, LDG ON CARS, CRFS, FITTING & TANK LEAKS
840904	HOUMA, LA	B206B	N3			1	1	Y	ELECT FIRE IN FLT, LAND & BURN
840925	KERNERSVILLE, NC	B206B	N3	2			2	N	TOWER STRIKE DURING RESCUE
841010	RIVERSIDE, CA	B206B	N3	3			3	U	TREE STRIKE ON LDG
841227	LABELLE, FL	FH1100	N3	1			1	N	ENG FAIL, HIT NEAR INVERTED
850109	GLENALLEN, AK	FH1100	N3			4	4	Y	SLID DOWN SLOPE, ENG FIRE THEN DEST AC
850118	NEWHALL, CA	B205A	T2	1	1		2	U	CFIT DURING FILMING, NO REF TO CRFS
850505	SPOKANE, WA	H369D	N3	2			2	U	WIRE STRIKE
850619	SQUAW VALLEY, CA	B214B1	T1	2			2	U	ENG FAIL & FIRE, TANK RUPTURE AT IMPACT
850804	CHAMBLEE, GA	AS355F	N3		6		6	Y	HARD VERT IMPACT, TANK RUPTURE, ONLY SML ENG FIRE
851120	CHESHIRE, CT	B206B	N3	2			2	U	WX, CFIT, EXPLOSION AFTER IMPACT
860121	ELLENDALE, MN	B206B	N3	3			3	U	WX, CFIT, LARGE FIRE
860531	WENATCHEE, WA	UH1L	R2	1			1	U	TR FAIL, HIT TREES ON LDG, SMALL FIRE, TRAUMA

TABLE 3-1. TURBINE HELICOPTER ACCIDENTS WITH POSTCRASH FIRE (Continued)

DATE	LOCATION	TYPE	CLASS	FATAL	SERIOUS	MINOR/ NONE	TOTAL	SURVIVABLE	DETAILS
860616	JACKSONVILLE, FL	H369HE	N3	2	1		3	Y	TR FAIL, HIT POLE, TRAUMA DEATH, INJ. DELAYED FIRE
860923	GALAX, VA	B222UT	T1	3			3	N	CFIT, WX
861009	GAHANNA, OH	MD369E	N3		2		2	Y	ENG FAIL, C&B, AUX TANK DID NOT BURN
861029	BRATTLEBORO, VT	B206B	N3	1			1	N	CFIT, TRAUMA
861209	ZEPHERHILLS, FL	H369HS	N3	2			2	N	ENG FAIL, H ARD RUN ON, FLIPPED AND EXPLODED
870415	BEN WHEELER, TX	B222	T1	2			2	N	MECH FAIL, C&B, TRAUMA DEATH
870605	CHOTEAU, MT	B206L1	N3	4			4	Y	CFIT, THERMAL DEATHS
870607	BAY CITY, MI	BO105	N3	2		1	3	Y	CFIT
870913	PINEDALE, WY	FH1100	N3	1			1	U	CFIT
871221	GULF OF MEXICO	SA330J	T3	15			15	U	HIT RIG ON LANDING
880120	OMAHA, NE	AS350B	N3			2	2	Y	CONTROL FAILURE
880417	CAJON, CA	AS355F	N3	2	1		3	U	WIRE STRIKE, SMALL FIRE
880909	ENTIAT, WA	B204B	T2	2			2	N	MAST BUMP
881222	CAP GIRARDEAU,	B206L1	N3	3	1		4	U	WIRE STRIKE
890213	TYLER, TX	BK117A3	N3	3			3	U	WIRE STRIKE, TRAUMA
890322	ATLANTA, GA	B206B	N3		1		1	Y	WIRE STRIKE, SMALL FIRE
890506	GIRDWOOD, AK	B412	T1			2	2	Y	FLT CONT FAIL, CRASH IN HILLS
890522	OLDTOWN, MD	UH1B	R2	2			2	U	WIRE STRIKE, SMALL FIRE FROM GAS FOR SPRAY PUMP
890525	CAMP VERDE, AZ	B206B	N3	1			1	N	WIRE STRIKE, TRAUMA
890615	PUNTILLA LAKE, AK	AS350B	N3	1			1	N	CFIT
890920	TUCKERTOWN, NJ	BO105	N3	1			1	U	CFIT
891013	BOTHELL, WA	H369D	N3	1			1	N	WIRE STRIKE, IMC
900506	ULYSSES, KS	B204	T2	1			1	Y	LOW ROTOR RPM

TABLE 3-1. TURBINE HELICOPTER ACCIDENTS WITH POSTCRASH FIRE (Continued)

DATE	LOCATION	TYPE	CLASS	FATAL	SERIOUS	MINOR/ NONE	TOTAL	SURVIVABLE	DETAILS
900512	CARMEL VALLEY, CA	B206B	N3	1		1	2	Y	WIRE STRIKE,
900819	MEETEETSE, WY	SA316B	N3		3	4	7	Y	CONTROL FAIL, ROLLED INVERTED ON RUNON LDG
910828	WALTON, OR	AS350B1	N3	3			3	U	CFIT, TRAUMA
911108	SALT LAKE, UT	B206B	N3	1			1	U	PILOT ERROR, TRAUMA
920115	EDISON, NJ	H369D	N3	1			1	U	WIRE STRIKE
920211	WELLINGTON, UT	B206B	N3	2			2	U	WX, CFIT, TRAUMA
920516	YAMHILL, OR	SA341G	N3	2	3		5	Y	CFIT
920629	BESSEMER, AL	B206B	N3	1			1	U	WIRE STRIKE
920916	HANA, HI	AS350B	N3	7			7	N	FLEW INTO MOUNTAIN, TRAUMA DEATHS,
921211	FORNEY, TX	FH1100	N3	1			1	N	CFIT, TRAUMA
930423	AUSTIN, TX	B206B3	N2	2			2	N	UNCONT IMPACT, BELL REPORT HAS NO REF TO CRFS
931203	CAMERON, LA	B412	T1			4	4	Y	IFR, HIT SHORT, DELAYED FIRE
940120	LEBEC, CA	AS350D	N3	2			2	N	WIRE STRIKE
940128	SAN JOSE, CA	S58JT	T3	1			1	U	ENG FAIL, ROLLED ON LDG ON BLDG
940221	WALNUT CK, CA	S58T	T3	3			3	N	ENG FAIL, LOST RPM, INVERTED
940520	IKIAH, CA	B206A	N3			2	2	Y	LOSS OF TR EFFECT
940812	WHITING, NJ	B206L4	N1	3			3	N	LOST CONTROL, WX
940818	VAN HORN, TX	FH1100	N3	2			2	N	UNQUAL PILOT, DIVE IN
940819	ALBERT LEA, MN	B230	T2			4	4	Y	HARD LDG, FIRE AFTER 2 MIN
941104	PERRY, FL	BO105S	N3	2	1		3	U	WIRE STRIKE
950118	JACKSON TWP, PA	A109C	N3	3			3	N	LOST CONT, WX
950722	BORGER, TX	B206L3	N2	1	1		2	U	LOSS OF CONTROL, WX
951026	LEAGUE CITY, TX	BO105S	N3	2			2	N	LOST CONT, IMC

TABLE 3-1. TURBINE HELICOPTER ACCIDENTS WITH POSTCRASH FIRE (Continued)

DATE	LOCATION	TYPE	CLASS	FATAL	SERIOUS	MINOR/ NONE	TOTAL	SURVIVABLE	DETAILS
951205	THIBODAUX, LA	H369E	N3	1		1	2	Y	POLE STRIKE IN HOVER
960203	CHANDLER, OK	B206B3	N2			1	1	Y	HARD LDG, SKID SEPARATION, FIRE
960404	CHARLSTON, WV	B206L1	N3	2			2	N	LOST TAIL, HIT INVERTED
961004	CANBY, OR	BV107II	T2	3			3	N	FLT CONT DISCONNECT
961212	PENN YAN, NY	BO105C	N3	3			3	N	CFIT
970224	MT. SPRINGS, NV	B206B3	N2		1	2	3	Y	DOWNDRAFT, HIT HARD AND ROLLED
970416	CALDERWOOD, TN	B204B	T2			1	1	Y	POWER LOSS, C&B
970510	PUAKO, HI	H369D	N3	2	2		4	Y	ENG FAIL, THERMAL DEATHS
970610	HERON, CA	B204	T2			1	1	Y	POWER FAIL, ROTOR HIT TAIL BOOM
971030	FRANKFORT, IL	AS350B	N3	2			2	U	C&B, NIGHT
971108	FOREST GROVE, OR	B206B	N3			1	1	Y	SLING CABLE INTO ROTOR
980111	SANDY, UT	B222UT	T1	4			4	N	CFIT, WX
980426	STEVENSVILLE, MD	FH1100	N3	2			2	N	LOSS OF MR IN FLT
980520	LANAI, HI	MD520N	N3			4	4	U	ENG FAIL, HARD LDG, FIRE
980820	SPENCER, IA	B222SP	T1	3			3	N	INFLT BREAKUP
990404	INDIAN SPRINGS, NV	BO105C	N3	3			3	U	IMC, C&B
990608	ASHCAMP, KY	AS350BA	N3	1			1	U	WIRE STRIKE, C&B
990712	JACKSON, KY	S76A	T2	4			4	N	CFIT
990909	BAKERSFIELD, CA	B212	T1			1	1	Y	WIRE STRIKE, C&B
991127	PHILADELPHIA, PA	B212	T1	2			2	U	LOSS OF CONTROL, MR STRIKE ON TAIL, C&B

CLASS

N = Normal Category
T = Transport Category
R = Restricted Category

1 = CRFS Installed
2 = CRFS Status Unknown
3 = No CRFS

SURVIVABLE

Y = Yes
N = No
U = Undetermined

The following are two examples of fuel system performance in typical small and large turbine powered rotorcraft respectively.

- Accident Example: Small Turbine Helicopter

  Engine failed en route (due to loss of compressor air signal to fuel control) and a landing was made on a divided highway. The glide was stretched to avoid a large wall and several cars, and the aircraft hit hard on the center median and skidded to the shoulder. Fire erupted at impact and left evidence across the highway. The two occupants escaped with serious burn injuries. The fuselage was consumed by fire, but the auxiliary tank did not leak or burn. No statement was provided as to whether this auxiliary tank was a crash-resistant tank, although this information could be obtained from the aircraft maintenance records.

- Accident Example: Large Turbine Helicopter

  A transport category helicopter, which has a crash-resistant fuel system reported to be equivalent to the current 14 CFR Part 29 requirements, experienced loss of rotor RPM and settled. The pilot elected to land in a street intersection and landed on parked automobiles. The right side of the helicopter burned through exposing the interior. The report states that the aircraft was equipped with a CRFS and that "The system ruptured and fuel was spilled over the roadway and parked cars." Report Supplement I, Crash Kinematics, is mostly filled in. Supplement N, Fire Explosion, is filled in, and good data on injuries is provided. A portion of the fuel system section of the maintenance manual is included in the report, but there are no details of how the CRFS worked or failed or whether valves operated and, if so, whether they sealed properly. No specific information is provided on bladder failures, type of material, or number and location of tanks that still contained fuel. Photos show a reasonably intact fuselage. This example shows that, even where the documentation of CRFS performance could easily have been reported by the investigator, it was not.

3.3 ACCIDENT REPORT FORMS.

3.3.1 Civil Accident Investigation Forms.

The NTSB has several specific crash impact data forms in their accident investigation report package (Form 6120.4, see appendix A). These forms are all dated 1-84.

Supplements A & C, "Wreckage Documentation" (the form to be used depends on the number of engines) have a section on Fuel Tanks, allowing for entries of fuel quantities (items A, B, and C). Item D on this form pertains to "Tank Construction" with the following choices: 1. Wet wing; 2. Bladder; 3. Metal; and E. Other

Item F is "Spillsafe Fittings," with choices Yes, No, Other. Item H is "Fuel Leakage Rupture" with the following choices: 1. None, 2. Line; 3. Fitting; 4. Tank; and I. Other.

There is no place to indicate if the bladders are of any special material and no details of how or why any "spill safe valves" might have worked or not worked, nor are they defined or their location given. Even if the box indicating a "fitting" leaked is checked, there is no correlation to the spill safe valves, so one cannot determine if they worked or not. There is one blank row for data on tanks in locations other than wing and fuselage, such as tailplane tanks in some transports. There is no place to specify the location of the fuselage tank, whether this is a helicopter underfloor tank, a center wing section tank, a baggage compartment tank in the front or rear of the aircraft, or a passenger compartment range extension tank often used in helicopters.

Supplement G is titled "Rotorcraft," and the 1983 version of this page had one section, No. 4, called "Crashworthiness Provisions." This section had the following check box entries:

1. Fuselage
2. Fuel systems
3. Crew seats
4. Passenger seats
5. Passenger shoulder harness
6. None

In the 1984 version of the form, this box was removed and this data is no longer collected.

Supplement I is called "Crash Kinematics." It provides places to record information about the impact sequence and is fairly comprehensive. However, if Box 13, "Fuselage Totally Destroyed" is checked yes, then the rest of the form, regarding specific fuselage damage and exits, is to be skipped. In reviewing many of the accidents listed in table 3-1, very few had Supplement I filled out in any detail. This is the key form to provide statistical data on impact parameters and very little data is being collected.

Supplement K, "Occupant, Survival and Injury Information," is five pages long and a set may be filled out for each individual. If the accident is judged "nonsurvivable," boxes 3 to 35 are skipped. No definition of nonsurvivable is given on the form. Box 74 provides a location to indicate if death was due to "Fire/Smoke."

Supplement L, "Seat, Restraint System and Fuselage Deformation," is three pages long and provides for information on many parts of the seats. However, if the seats or restraint systems are marked "Totally Destroyed" no other specific information about them is collected.

Supplement N is called "Fire/Explosion." It provides entries for where the fire started in the sequence, location of initial fire or explosion, boxes to be checked for ignition sources, fuel sources, fire propagation direction, percent of occupiable space in fire area at time of evacuation, ground structures burned, and one and one half pages for details on sensors and extinguishing systems. Some files had this data filled in.

Until 1991, some of the data from these forms was entered into a computer database. In 1991, when the NTSB moved to their current facility, a new computer system was put into use and the

crashworthiness data was no longer entered into any database. If needed, images of these forms must be found in the individual accident docket one at a time.

For pre-1995 accidents, these docket files are on microfiche. Later files are in a computer image file. The microfiche files are readable, although the quality of the photos is poor, and copies may be made in the NTSB Public Inquiries office at 15 cents a page. The computer used for accessing the later files is extremely slow, taking about 1.5 minutes to print a file page. Some dockets are over 1000 pages long. In short, accessing whatever information exists is time consuming and difficult.

In summary, the NTSB forms provide a place to record some critical data for CRFS evaluation and criteria development. Unfortunately, the forms lack for precision, adequate space for sufficient information, and are rarely filled out in any detail. The little data that is collected is not available in usable form in any database.

3.3.2 U.S. Army Accident Investigation Forms.

Appendix A contains four U.S. Army accident investigation forms. These are dated July 1994.

DA Form 2397-6-R, "In-Flight or Terrain Impact and Crash Damage Data," is specifically for rotorcraft and provides places to note the relevant impact parameters, crushing and deformation of structure, displacement of components, and many details of "Postcrash Flammable Fluid Spillage." In two pages, it is much more comprehensive than the NTSB forms.

DA Form 2397-9-R, "Injury/Occupational Illness Data," uses a coding format to document injuries, mechanisms, and cause factors. Specific information on lost work time, loss of consciousness, amnesia, and cause of death (if applicable) is requested.

DA Form 2397-10-R, "Personnel Protective/Escape/Survival/Rescue Data," allows for detailed information in each of these areas. Civil aviation does not use much of the equipment listed on this form.

DA Form 2397-12-R, "Fire Data," is also quite detailed, with many specific fire locations, materials, ignition sources, and extinguishing systems listed and boxes to check for involvement. There is also a location to indicate if the information is definite or suspected.

These U.S. Army forms are the result of years of collecting impact and fire data in order to establish the best possible computer database for developing crashworthiness specifications and for system performance evaluations. Because the U.S. Army pays for both the accident costs and the crash protection features, it has established a good system of feedback to optimize the overall system.

The NTSB has no similar economic motivation since they pay only the investigative costs, but not the accident costs or prevention costs. Under this system, and its inadequate budget, the NTSB has an incentive to keep investigative costs low and has no economic payoff for collecting detailed crashworthiness data.

3.4 COMPARISON OF MILITARY AND CIVIL CRASH ENVIRONMENTS.

Helicopter accidents, both civil and military, have been studied for over 40 years. Some of those studies were specifically directed toward crashworthiness, and some of the crashworthiness studies were specifically focused on the postcrash fire situation. During this period, the military studies were quite involved and continue to be so today. Conversely, the civil studies have been more sporadic; however, they have been able to benefit greatly from the knowledge gained during the military effort.

A review of past military and civilian studies indicate that there is quite a difference in what the researchers concluded was the upper level serious but survivable accident. When presented as a function of vertical velocity change, it has been suggested that the upper level for the civilian helicopter is around 26 ft/sec. The military helicopter is engineered for greater survivability and can protect its occupants in accidents with vertical impact velocities of up to 42 ft/sec or more, depending on whose study is being reviewed.

Each helicopter group (military and civil) tends to think that their helicopters are different from the other group. While this is true to some extent (e.g., AH-64s and AH-1s), most other military helicopters have civilian counterparts. It is also believed by the civil sector that, because their helicopters fly different missions, they crash differently. It is the opinion of the researchers and authors of this report that the crash differences are not as great as believed by the civil sector. Whichever opinion is correct, the primary issue is the lack of a clear understanding of the actual civil crash scenario, caused by the lack of sufficient data collection to support any conclusion.

The overall intent of crashworthiness integration into a given aircraft design is to save lives. Charts, such as those shown in figures 3-1 and 3-2, can quickly put the crash survivability issue into perspective. Enlarging the survivability segment is an obvious goal. Although the actual segment sizes portrayed on the charts are for illustration purposes only, charts such as these need to be developed to support the research effort focused toward the saving of lives.

Both the military and the civil sectors have endeavored to design enough crash resistance into their respective aircraft to be able to state that their aircraft are capable of protecting occupants up to and including the 95th percentile upper-limit survivable accident. While this statement tends to convey a level of protection provided, it does not give any indication of the percentage of all accidents that are protected. The 95th percentile upper limit survivable accident, simply put, says that 95% of the survivable accidents are at this severity or less. It does not indicate what percentage of all accidents is survivable. The percentage of survivable accidents out of all accidents depends on the crash resistance of the airframe and the level of protection afforded by the seats and restraint systems, as well as the fuel system. Before they can begin to design significant crash-resistant improvements, aircraft designers must think of survivable accidents* in terms of human tolerance levels, and not in terms of the number of accidents in which people are killed. This is obviously necessary when designing a new aircraft that has no accident record available.

---

* A survivable accident, as defined by the FAA, the NTSB, and by crash survivability researchers in the field, is an accident in which the forces transmitted to the occupant through his seat and restraint system do not exceed the limits of human tolerance and in which a safe space around the occupant is maintained throughout the entire crash sequence.

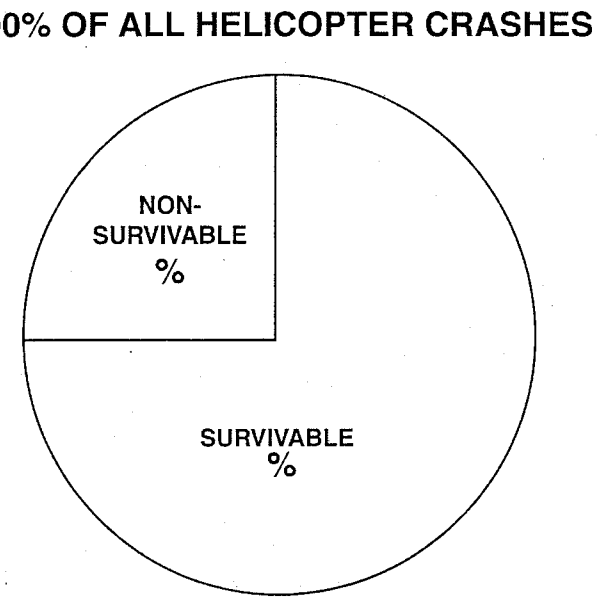

FIGURE 3-1. PERCENTAGE OF ALL HELICOPTER CRASHES THAT ARE SURVIVABLE AND NONSURVIVABLE
(Segment sizes are for illustrative purposes only and are not based on actual data)

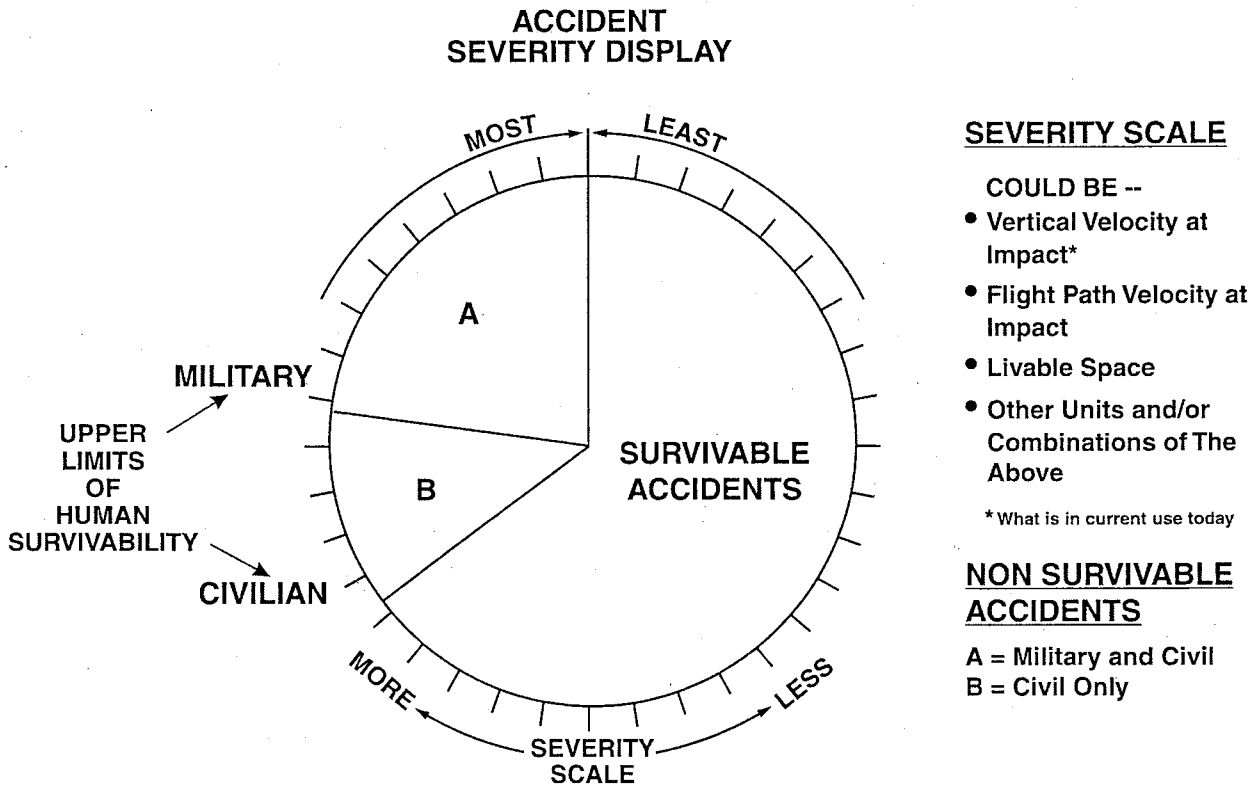

FIGURE 3-2. SEVERITY SCALE OF ALL HELICOPTER CRASHES
(Segment sizes are for illustrative purposes only and are not based on actual data)

Some researchers who have studied accident severity (relative to human survival in elevated G environments) have concluded that speed in the vertical direction is the most life threatening because, as it is being reduced to zero quickly during most ground impacts, it is transmitting high G forces to the occupants. The researchers and authors of this report agree that vertical forces are a major threat, but not at the exclusion of the longitudinal forces. This is especially true when one considers that the longitudinal speeds, which are usually the higher of the two, combine with the vertical speeds to form the actual crash forces transmitted to the occupants and the fuel systems during the impact and slide out. Longitudinal speeds usually transmit lower G forces to the aircraft occupants because the aircraft takes longer to stop in the longitudinal direction.

While this low G environment is favorable from the standpoint of the occupant, it creates two additional major fuel system threats.

The first threat results when portions of the aircraft, starting to slow down in the longitudinal direction, are brought to an abrupt halt by contacting heavy or unyielding objects, such as automobiles, telephone poles, stumps, rocks, etc. The localized G forces generated by these abrupt stops are usually far greater than those transmitted to the occupants in both the longitudinal and vertical direction. If part of the fuel system is located in these areas (e.g., front or bottom of the aircraft), it will experience these higher, localized forces. Therefore, unless the entire fuel system is located away from these anticipated impact areas, it must be designed to withstand much higher G levels than the occupants. Thus, overall aircraft velocity change data cannot be used directly as criteria for CRFS design. Any attempt to establish different design and/or test criteria for civil versus military CRFS should be based on detailed accident studies and extensive testing, not just on differences in overall aircraft velocity changes.

The second threat results when extensive structural displacement occurs during the wreckage slide out. This displacement literally pulls the fuel system apart. The CRFS designer must factor in this displacement by allowing the fuel system to move separately from the structure without significant leakage. Where the displacement is not expected to be large, frangible attachments and flexible, extra-length fuel lines might suffice. In areas of extensive structural displacement, the CRFS designer must either (1) move the fuel system out of the area or (2) design in "safe failure points" by using self-sealing breakaway valves, etc. In both cases, the fuel system components must also be able to withstand all the crash forces in their locations.

4. STATUS OF CURRENT TECHNOLOGY AND IMPLEMENTATION OF CRFS.

4.1 CRASH-RESISTANT FUEL SYSTEM DESIGN ISSUES.

The principal objective of implementing crash-resistant fuel systems in helicopters is to protect the occupants of the aircraft from injuries due to postcrash fire. Properly designed and configured crash-resistant fuel systems can (in order of preference): prevent the onset of a postcrash fire by containing all fuel and other flammable liquids; delay the onset or minimize the severity of postcrash fire by minimizing spillage or directing it away from potential ignition sources; or isolate a postcrash fire from impinging on occupied areas of the airframe long enough for occupants to make their way to safety.

The predominant criterion for aircraft designers is the level of severity of a crash that must be accommodated by the CRFS. The traditional approach has attempted to provide a CRFS that will survive accidents that have impact velocities that are typical of the 95th percentile "survivable" crash. In addition, the CRFS must safely survive crash environments in which extensive structural displacement occurs, such as often occurs during accidents that impact with high longitudinal speeds. As straightforward as the objective appears, it is difficult to achieve in practice unless the designer has sufficient knowledge and data available to define the approximate crash parameters of survivable accidents in the type of aircraft in question. In addition, advances in other areas of crash survivability, e.g., seats and restraints, which attenuate crash forces transmitted to occupants, have allowed occupants to survive in accidents that are severe enough to totally destroy the aircraft. It is, therefore, not unreasonable to expect the CRFS to safely contain its contents throughout the entire severe crash sequence.

The CRFS must be designed within the constraints of aircraft performance requirements and within the boundaries of numerous rules and regulations. Standards, regulations, and specifications have been established for CRFS design for both civil and military helicopters. These standards are discussed in detail in section 5 of this report.

The acceptable crash fire environment must also be defined. While complete elimination of postcrash fire is the surest way to prevent fire injuries, it is sometimes possible to prevent injuries even if a postcrash fire occurs by minimizing the size of the fire and isolating it from the occupants long enough for them to escape. The designer can estimate the reduction of the postcrash fire hazard of various CRFS modifications by using appropriate hazard analyses and risk assessment procedures discussed in section 6 of this report.

Within the framework of all of these considerations, highly successful crash-resistant fuel systems have been designed and utilized. This section of the report summarizes the current status of knowledge in CRFS technology and the level of implementation of CRFS in both military and civil helicopters.

4.2 GENERAL SYSTEM DESIGN CRITERIA.

Crashworthy fuel system design must fit within the framework of established fuel system design parameters. These overall criteria may be summarized in the following outline:

- Aircraft Performance

  - Operating Conditions
  - Crash Conditions
  - Occupant Survivability Level Desired/Possible
  - Structural Reaction to Crash

- Overall Fuel System Design

  - Performance
  - Simplicity
  - Reliability
  - Location

- Individual Component Design

  - Location
  - Performance (operational and crash resistant)
  - Materials
  - Reliability
  - Maintenance

- Design Aids

  - Standards
  - Checklists
  - Hazard Analyses
  - Handbooks and Guides

4.2.1 Aircraft Performance.

The primary factor to be considered in fuel system design is the performance required of the aircraft. The system must be designed to allow the aircraft to accomplish its design goals and to operate successfully during all required operational modes of the aircraft. This principal must be followed in successful CRFS design as well. However, the CRFS also must be designed to perform its intended function of preventing or minimizing dangerous spillage and resulting fire following a crash. To that end, the criteria listed in italics above pertain specifically to crash-resistant design and generally have not been included previously in standard fuel system design criteria.

The common parameters of crash conditions for the type of aircraft in question must be defined and quantified in order to determine the level of performance expected for the CRFS. For example, helicopters tend to crash with higher vertical-to-longitudinal velocity ratios than do fixed-wing aircraft. Expected crash velocities must be obtained from accident data gathered for the aircraft in question or extrapolated from crash data on similar specific aircraft models. The

occupant survivability level in these crashes must be ascertained. The survivability criteria for helicopter crashes has been defined in terms of crash loads transmitted to properly restrained occupants and to the preservation of occupiable space around the occupant, irrespective of whether the occupants did or did not survive [44]. This is possible because the occupiable area and overall aircraft structure experience a similar crash pulse due to the relatively small size of a helicopter. Once this data is obtained it is integrated with the level of occupant survivability desired.

Before the CRFS can be designed, the aircraft structural response to these anticipated crash conditions must be determined. Crash data can be helpful in determining structural response of similar designs. Design analyses and computer studies should also be utilized to determine anticipated failure modes and locations of structural deformation during crashes. This information is essential in determining CRFS component locations and performance requirements.

4.2.2 Overall Fuel System Design.

The fuel system as an integrated system must be designed to function under all foreseeable environmental and operational conditions that might be encountered during the life cycle of the aircraft. The CRFS must perform its function within the desired survivable crash envelope as a whole system and not simply a collection of individual components. Whatever conditions are imposed upon a component and its reaction to those conditions could well compromise the integrity of an adjacent component (e.g., if a fuel line is trapped in deforming and separating structure, the forces transmitted through the line might pull the hose out of the hose end fitting, break the hose end fitting, or break the component that is attached to the hose end fitting, allowing fuel leakage even if the integrity of the hose itself is maintained).

The location of the fuel system and its components is constrained by the configuration and performance requirements of the aircraft. However, the CRFS fuel system location must be incorporated into the aircraft very early in the design process so that the fuel system and its components are protected from crash damage to the maximum extent possible.

The design philosophy for the CRFS must, by necessity, follow two paths. One defines the probable or anticipated fuel spillage methods that will occur at the crash severity level selected, while the other evaluates the relative crash-resistant features of the specific items making up the CRFS. As an example, if a fuel filter assembly does not incorporate a high level of crashworthiness in its design, it could still function safely in a crash if it were mounted in an area that was deemed to remain "safe" during the upper-limit survivable accident. However, if the component must be located in an area where extensive crash damage is likely, the component must incorporate crash safety features inherent in its design.

The design of the fuel system should be kept as simple as possible commensurate with its design objectives. Simplicity generally leads to increased reliability and ease of maintenance. There is an added benefit for the CRFS system—simplicity generally reduces the number of possible failure points during a crash.

4.2.3 Individual Component Design.

Fuel system components are routinely designed to be structurally sound during all normal flight and service loads. These components, with no modification, could be used to create a CRFS that would function as desired in the selected upper level survivable accident. To do so, however, could require that the airframe behave in a specific manner regardless of the crash environment. Further, it is probable that structural enhancement and reinforcement would be required in areas where the noncrashworthy components were located. While such a CRFS could be built, the weight and other design considerations, i.e., component location and fuel line routing, render the approach less than desirable.

A great deal of information has been written about the design of crashworthy fuel system components. The Aircraft Crash-Survival Design Guide is the most comprehensive and most current source of this material [45] and should be the designers' principal reference for design guidance. There are several key components of the CRFS, however, that are worthy of additional discussion. They are the fuel tanks and its fittings, the self-sealing breakaway valve, the fuel lines and their fittings, vent valves, drain valves and spillage control valves. If the reader wishes to obtain more detailed information regarding these components, the reader should refer to the Aircraft Crash-Survival Guide that has been the basis for the following discussion [45].

4.2.4 Tanks and Fittings.

Helicopters flying today carry their fuel in a variety of different type tanks. Some are merely open areas within the fuselage, sealed with a coating to prevent seepage. Others utilize bladders with varying degrees of crashworthiness. Others use metal cans, while still others use containers that are cast of various synthetic materials, some even appearing as large plastic bottles.

The ideal fuel system is one that completely contains its contents both during and after an accident of such severity as to be at or slightly above the upper limit of human survivability. The fuel must be contained no matter how the basic structure fails and regardless of the magnitude of the displacements of the fuel system components relative to the aircraft structure. Similarly, all possible crushing loads, penetrative loads, and inertia loads must be carried without leakage. The "fuel containment concept" today involves, as a prime element, the use of flexible, high strength, cut-resistant and tear-resistant fuel bladders built with construction materials and fittings that improve the ability of a fuel system to contain fuel under survivable impact conditions. Although this ideal fuel system is, at times, difficult to achieve, the accident history over the past 25 years clearly demonstrates that it can be done.

While the researchers and developers of the 1950s would undoubtedly embrace the definition of the ideal fuel system, and while they would applaud today's application of the fuel containment concept, their own efforts were generally unsuccessful. Their early work [12 and 13] ultimately resulted in the issuance of MIL-T-27422 and MIL-T-27422A, but exhaustive testing of the requirements contained in those specifications was not undertaken until the AvSER research of the 1960s.

The testing of the crash-resistant fuel tanks, developed in accordance with MIL-T-27422A, revealed at least three major shortcomings. The first was the underestimation of the vertical,

longitudinal, and lateral loads being applied to the fuel system in severe but survivable accidents. Since many helicopter fuel tanks are located low in the structure and/or very near the airframe outer surfaces, they are subject to severe loads. Additional loads can be added to the tanks by the close proximity of passengers, cargo, and, in some cases, transmission or engine units.

The second shortcoming was the failure to consider the fuel tank fitting pull-out problem and the puncture and tear-resistance properties of the fuel tank that are needed to prevent penetration by the jagged metal and broken spear-shaped components of the failing structure. When puncture coincides with the high-pressure loading of the tank during the crash sequence, the tearing of the fuel tank wall progresses rapidly away from the wound. Although the early CAA work recognized the potential danger from puncture and tear, no attempt was made to establish a material requirement in MIL-T-27422A for this phenomenon, for the problem related to tank wall strength relative to the metal fitting sizes or shapes, or for the fitting locations in the fuel bladder.

The third shortcoming was the failure to recognize that fuel system components, including the tanks, are often subjected to aircraft structure that is being torn apart and displaced a considerable distance. Requirements for tank design that would allow for safe separation from the displacing structures were not even considered.

With the demonstration of improved materials in the crash testing conducted during the 1960s [46], and with the development of new tests for measuring fuel bladder crash-resistant properties, MIL-T-27422A was completely revised. In addition to the standard qualification tests of noncrashworthy fuel tanks, as specified in MIL-T-6396 (bladder tanks) and MIL-T-4478 (self-sealing tanks), a draft of MIL-T-27422B [47] was issued containing a battery of new requirements related to crash-resistant fuel bladder testing. These new requirements included a series of tear-resistance tests, followed by tank drop tests. Both test series are noteworthy.

- Tear Tests. During the extensive research test activities of the 1960s and 1970s, as well as during the concurrent detailed crashworthiness fuel system investigations of aircraft crashes, it became readily apparent that the level of bladder material tear resistance was a key factor in preventing dangerous fuel spillage. In many crashes, metal fittings integral to the bladders would remain attached to the displacing airframe structure, tearing out of the bladder walls, and would thereby release large quantities of fuel. In addition, bladder punctures that frequently occurred would continue to tear the bladder, especially during the fluid pressure build-up phase of the crash impact. These tears also allowed large quantities of fuel to escape. The need to safely retain the metal fittings in the bladder and the need to find a satisfactory solution to the puncture-tear propagation problem were key concerns in establishing the tear-resistance requirement. After almost 10 years of testing, 400 ft-lbs of energy were determined by the authors of MIL-T-27422B to be the appropriate constant-rate tear requirement for small- to medium-sized airplanes and helicopters with fuel tank quantities of up to 1,000 gallons. The research team concluded that additional research in all aspects of fuel tank crash resistance should be conducted before tanks with capacities exceeding 1,000 gallons were used, or before such tanks were installed in thicker skinned airliner sized aircraft.

- Fuel Tank Crash Impact Test. A 65-foot free-fall drop test was established by the researchers and authors of MIL-T-27422B after almost 10 years of test activity, including hundreds of actual tests. The 65-foot height was identified as the minimum drop test height that would verify the load-carrying capability of an unsupported bladder with all of the bladder metal fittings installed, and that would verify bladder seam continuity and strength, particularly in the bladder sidewalls. These are key issues that are brought into play when the bladders are required to bridge gaps appearing in the airframe due to structural displacement associated with an upper-limit survivable accident and/or when the bladders are also being compressed by strong, heavy, and often sharp structures.

  Bladders constructed of highly extendable materials, but low in cut- and tear-resistance, have been able to easily pass 65-foot drop tests; however, if the bladders contact a sharp edge or a penetrative object while being distended at impact, massive fuel spills will occur. The failure is analogous to sticking a pin in an inflated balloon. Bladders must also possess a high degree of cut-and tear-resistance to safely survive the upper-level survivable accident.

  Because the 65-foot drop test height was determined to be the minimum height required to verify necessary bladder strength, no margin of safety was built into the height of the drop test. Instead, a margin of safety was obtained by specifying that the tank be filled to 100% of capacity with water. Because the weight of water is approximately 25% greater than the weight of fuel, a margin of safety is achieved. In many applications, this margin of safety for a critical item might appear to be low, but given the track record the CRFS has established during the last 25 years, the margin of safety appears to have been appropriate.

  It is interesting to note that shortly after the 65-foot crash, impact test height was established as a result of the extensive military research program, units of measurement defining a reasonable upper-level survivable accident were emerging in the form of velocity changes occurring during the crash in three directions—vertical, longitudinal, and lateral. The resultant speed, the speed and direction actually traveled by the occupants, when all three speeds were combined, often exceeded 75 ft/sec. However, further study of the data indicated that the frequency of occurrence of the higher-velocity accidents was quite remote. Consequently, a resultant speed for the upper-level survivable military accident has been focused in the 65 ft/sec range.

  If the same exhaustive research that gave rise to the original 65-foot drop test height were undertaken today, the drop test height might be increased. The military helicopters of today are clearly more crashworthy than were their predecessors. Seat technology has been greatly improved, airbag programs are being implemented, in some cases survivable space is being enhanced, and other safety features are continually being added. As a result, occupants are surviving more severe crashes today than ever before. In fact, many helicopters crash onto soft ground containing rocks, stumps, and trees at higher longitudinal velocities than the 100 ft/sec (68 mph) speed referenced in MIL-STD-1290A, and those crashes are still being considered survivable. An indication that the

current fuel systems are not overdesigned is that postcrash fires are still occurring in crashes that are only slightly above the upper-limit survivable accident.

4.2.5 Self-Sealing Breakaway Valves.

Fuel and oil is moved from one location to another within the helicopter airframe through flexible and/or rigid hoses or tubes. During accidents, where structural displacement is great enough, these fluid carrying lines are often pulled beyond their stretching capability, causing them to separate and spill readily ignitable fluid. Spillages due to this type of plumbing failure can be greatly reduced by the use of self-sealing breakaway valves.

Self-sealing breakaway valves are valves designed to separate into two or more sections and seal the open ends of designated fluid-carrying passages. The openings may be in fuel/oil lines, tanks, pumps, fittings, etc. The valves fall into two general categories: the "frangible" type, which incorporate a portion that breaks apart, allowing valve closure and separation (figure 4-1) and the quick-disconnect type, which is installed so that it will be disconnected during the crash sequence (figure 4-2). Some valves in use today have both these features incorporated into their design. Each fuel system design will dictate which of the two types of valves can or should be used. In either case, the valves must be installed in a manner that precludes inadvertent operation.

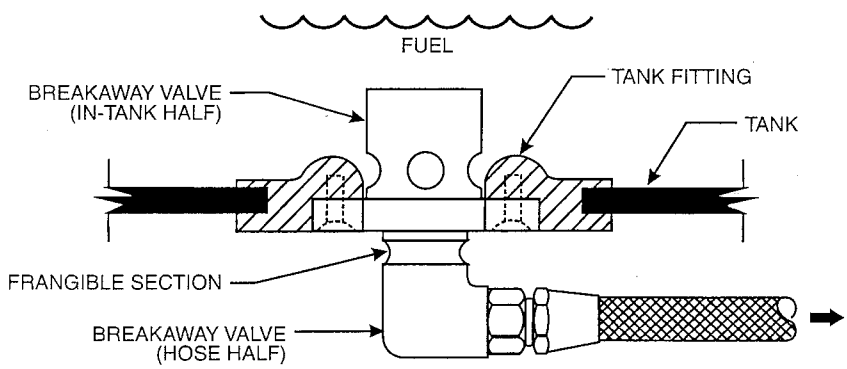

FIGURE 4-1. FRANGIBLE TYPE SELF-SEALING BREAKAWAY VALVE
(These type valves are closed and separated by displacement of one of the valve halves.)

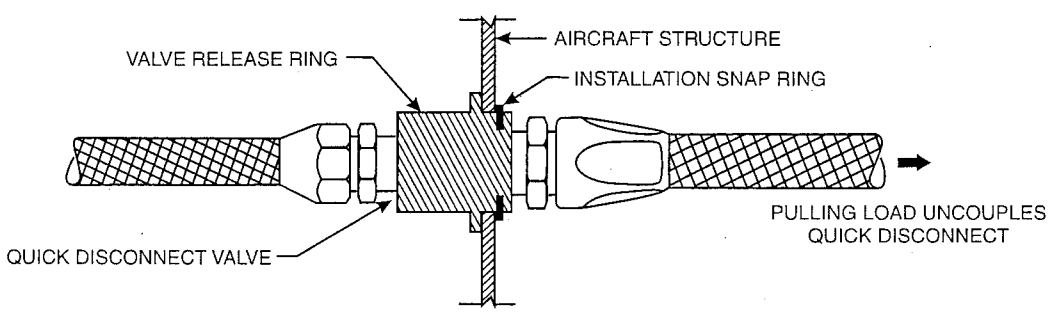

FIGURE 4-2. QUICK DISCONNECT VALVE INSTALLED TO OPERATE A SELF-SEALING BREAKAWAY VALVE

The forces that are usually applied to self-sealing breakaway valves to cause separation and closure are transmitted by a pulling movement of the flexible fluid-carrying hose. As the hose stretches, a force is transmitted to the valve. If the force is great enough, a component finally fails. Hopefully, it is the valve. Unfortunately, however, sometimes it is the other end of the hose or a hose end fitting. Care should be taken to ensure that the weak link in each load-producing system is the frangible section of the self-sealing breakaway valve and not some other link in the chain.

There are design situations where, for one reason or another, a load path other than the hose must be used. Cable lanyards are an acceptable alternative load path technique, and they are used today in some aircraft installations (figure 4-3). If lanyards are used to transmit the force to cause a valve to fracture and separate, they should be capable of carrying at least twice the amount of load it takes to fracture the valve. If they are used to move a release ring, such as on a quick-disconnect valve (figure 4-4), they should be at least twice as strong as the force required to move the ring. As a general rule, the force required to move a quick-disconnect release ring is considerably less than the force required to fracture the frangible section of a self-sealing breakaway valve; consequently, a lighter-weight overall system can result.

Self-sealing breakaway valves should be located at each fuel-carrying tank outlet and at locations within the fuel line network where extensive displacement is foreseeable, such as tanks mounted external to the fuselage, or in engine compartments. The purpose of these valves is to prevent rupture of the tank, hoses, or fitting components by placing a "safety fuse" in the load path.

A self-sealing breakaway valve (figure 4-5) should be used to connect two fuel tanks in a direct side-by-side arrangement if there is a reasonable probability that structure failure or displacement will occur in the immediate area of the tanks.

Tank-to-line interconnect valves should be recessed sufficiently into the tank so that the tank half is flush with the tank wall or protrudes only a minimal distance beyond the tank wall after separation. This feature reduces the tendency of the valve to snag on adjacent structures during the crash sequence.

The frangible interconnecting member of each of these valves should be sufficiently strong to meet all operational and service loads of the aircraft within a reasonable margin, but should separate at 25 to 50 percent of the minimum failure load for the weakest component in the fluid-carrying line. Subsection 29.952(c)(1) of AC 29-2B explains in detail how these loads are derived and calculated.

Each valve application should be analyzed to assure that the probable separation load will be exerted in a direction and manner to which the valve is best suited. These loads, whether tension, shear, compression, or combinations thereof, are obtained by analyzing the aircraft for probable impact force and direction and by determining the consequent structural deformation around the valve.

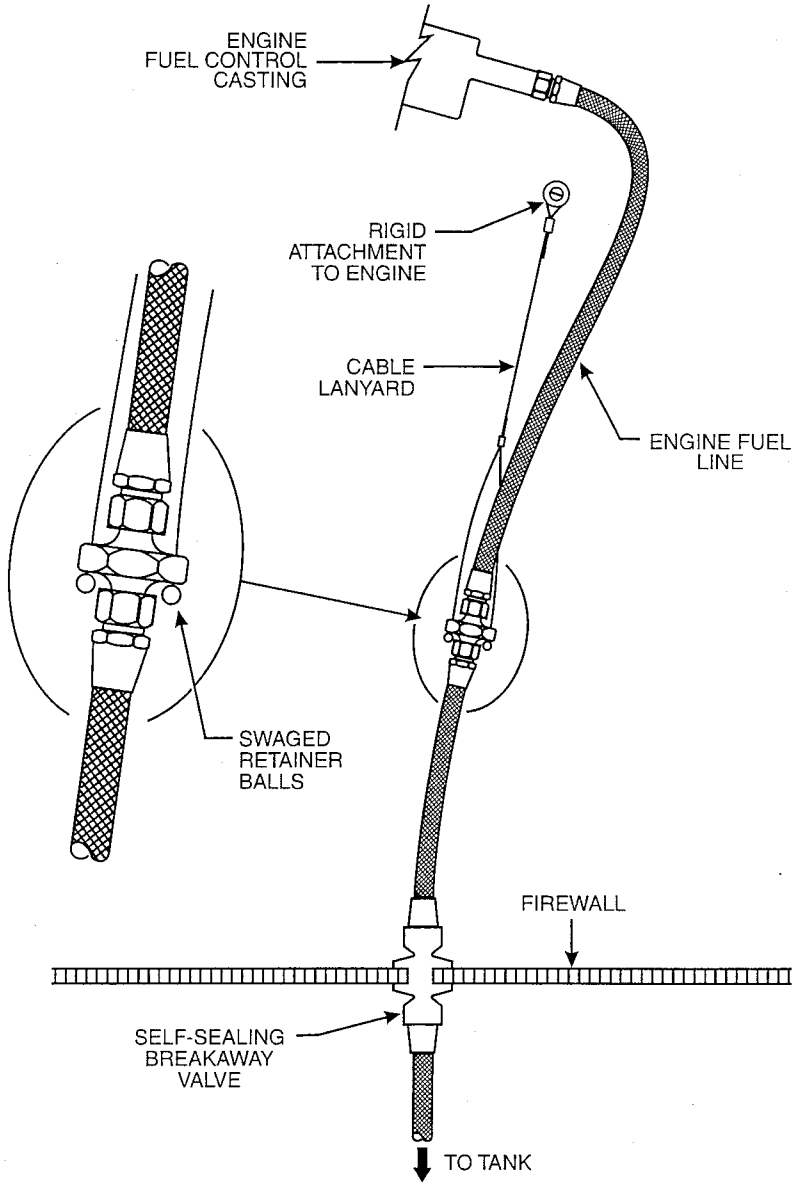

FIGURE 4-3. CABLE LANYARD USED TO TRANSMIT THE HIGH LOAD REQUIRED TO SEPARATE A TYPICAL SELF-SEALING BREAKAWAY VALVE

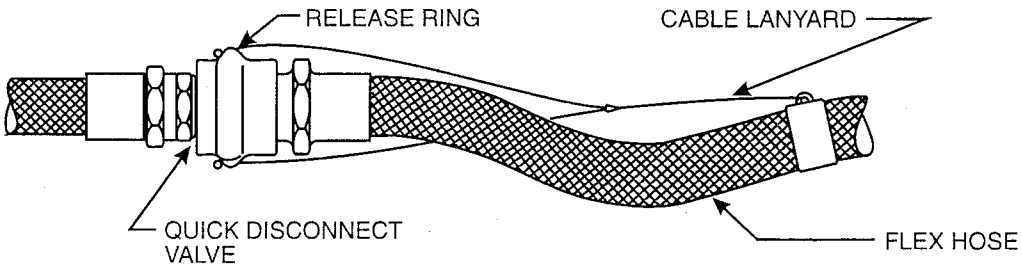

FIGURE 4-4. CABLE LANYARD USED TO TRANSMIT LOAD TO PULL RELEASE RING THAT UNCOUPLES QUICK-DISCONNECT VALVE

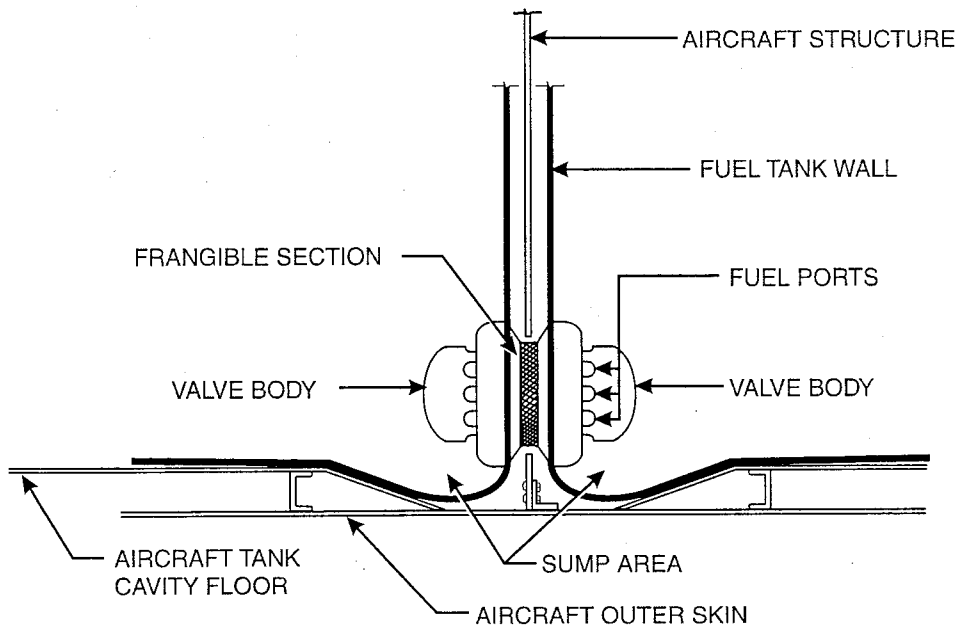

FIGURE 4-5. SELF-SEALING BREAKAWAY VALVE USED AS A TANK-TO-TANK INTERCONNECT

Self-sealing breakaway valve designs should not allow dangerous spillage during or after valve separation. The valve should permit no external leakage when partially separated. For this reason, valves with a very short triggering stroke are superior to those with a long stroke.

Operational pressures are dependent on specific applications, but the valve designs can take advantage of the available line pressure to assist in keeping the self-sealing mechanism closed. As in all valve designs, light weight and minimal pressure drop are major design objectives, but the resistance of the valve to direct impact or to high compressive loads should not be sacrificed for the sake of weight reduction.

4.2.6 Fuel Lines.

Damaged fuel lines frequently cause spillage in aircraft accidents. Lines often are cut by surrounding structure or worn through by chaffing rough surfaces. The use of flexible rubber hose armored with a steel-braided harness is strongly suggested in areas of anticipated dragging or structural impingement. In systems where breakaway valves are not provided, these stretchable hoses should be 20 to 30 percent longer, before stretching, than the minimum required hose lengths. This will allow the hose to shift and displace with collapsing structure rather than be forced to carry high tensile loads. For this reason, it is equally important that couplings and fittings be used sparingly because of their propensity to snag and restrict the natural ability of the hose to shift.

All fittings used in the fuel system should meet specific strength requirements when tested in the designated modes. The loads are always applied through the hose with freedom allowed for the hose to form the bend radius. Thus, the effective moment arm for the bending test changes primarily with the line size and secondarily as the applied load produces changes in the bend

radius. This test procedure is much easier to mechanize than one requiring a constant moment arm and is typical of what happens in an actual accident.

All fuel lines should be secured with breakaway (frangible) attachment clips in areas where structural deformation is anticipated. When fuel lines pass through areas where extensive displacement or complete separation is anticipated, self-sealing breakaway valves should be used.

In designing a system using line-to-line breakaway valves, one should consider potential hazards of cross-axis shear loading on the valve halves. While omnidirectional separation is not an absolute requisite for most line-to-line valves, it is highly desirable, and every attempt should be made to procure omnidirectional valves if there is any possibility of cross-axis shear loading.

Fuel lines are often used as the means of applying the loads necessary to cause self-sealing breakaway valves to close and separate. While hose and end fitting strengths are discussed in this report and in AC29-2B (appendix B), it must be remembered that, in order for a valve to be pulled apart at a predetermined load value, the structure supporting the opposite end of the hose-to-valve connection also must be capable of carrying the load. This includes bulkhead fittings and fittings terminating in components such as engine fuel controls, filters, pumps, etc. Failure to recognize and design around these often overlooked weak links in the fuel plumbing system and can negate the overall crash-resistant design effort.

Fuel line routing should be carefully considered during the design stage. Fuel lines should be routed along the heavier structural members, since those members are less likely to deform or separate in an accident. Avoid placing fuel lines that will normally be carrying fuel, if a crash should occur, in areas of anticipated impact damage, such as adjacent to the lower external skin. Evacuated fuel lines can be considered possible exceptions to this rule. Also, it is important that hoses have a space into which they can deform when necessary. For example, when hoses pass through large flat-plate areas, such as bulkheads or firewalls, the hole allowing line passage should be considerably larger than the outside diameter of the line. Hose stabilization as well as liquid-tight, fire-tight seals still can be maintained if frangible paneling or baffles are used.

If design requirements limit the use of the protective measures discussed above, full use should be made of self-sealing breakaway couplings located in areas of anticipated failures and structural displacements. Crossover connections, drains, and outlet lines present a special problem since they are usually located in the lower regions of the tank where they are vulnerable to impact damage. Space and flexibility should be provided at the connections to allow room for the lines to shift with collapsing structure. Utmost consideration should be given to using self-sealing breakaway fittings at each line-to-tank attachment point.

4.2.7 Vent Valves.

Helicopter vent systems become involved in the crash-fire episode when the aircraft remains upright and the fuel tank is compressed, the aircraft rolls far enough to one side to allow fuel to drain out of the vent lines and/or when the vent lines fail.

Vent line failure often occurs at the point of exit from the tank. Failure at this point can be reduced by using short, high-strength fittings between the metal insert in the tank and the vent line. The vent line should be made of wire-covered flexible hose and should be routed in such a manner that it will not obviously become snagged in a displacing structure and torn from the tank. Self-sealing breakaway valves also can be placed at the tank-to-line attachment area. This approach becomes mandatory if there is danger of the tank being torn free of the supporting structure.

Vent lines can be routed inside the fuel tank in such a manner that, if rollover occurs, spillage cannot continue. This can be accomplished with siphon breaks and/or U-shaped traps in the line routing.

Many fuel systems are ideally suited for the integration of rollover float/vent valves inside the fuel tank. These valves are designed to operate in any attitude and to allow a free flow of air while prohibiting the flow of fuel. They are particularly advantageous during rollover accidents and can be used in lieu of flexible lines, breakaway valves, and all other alternate considerations. One current type of vent valve is illustrated in figure 4-6.

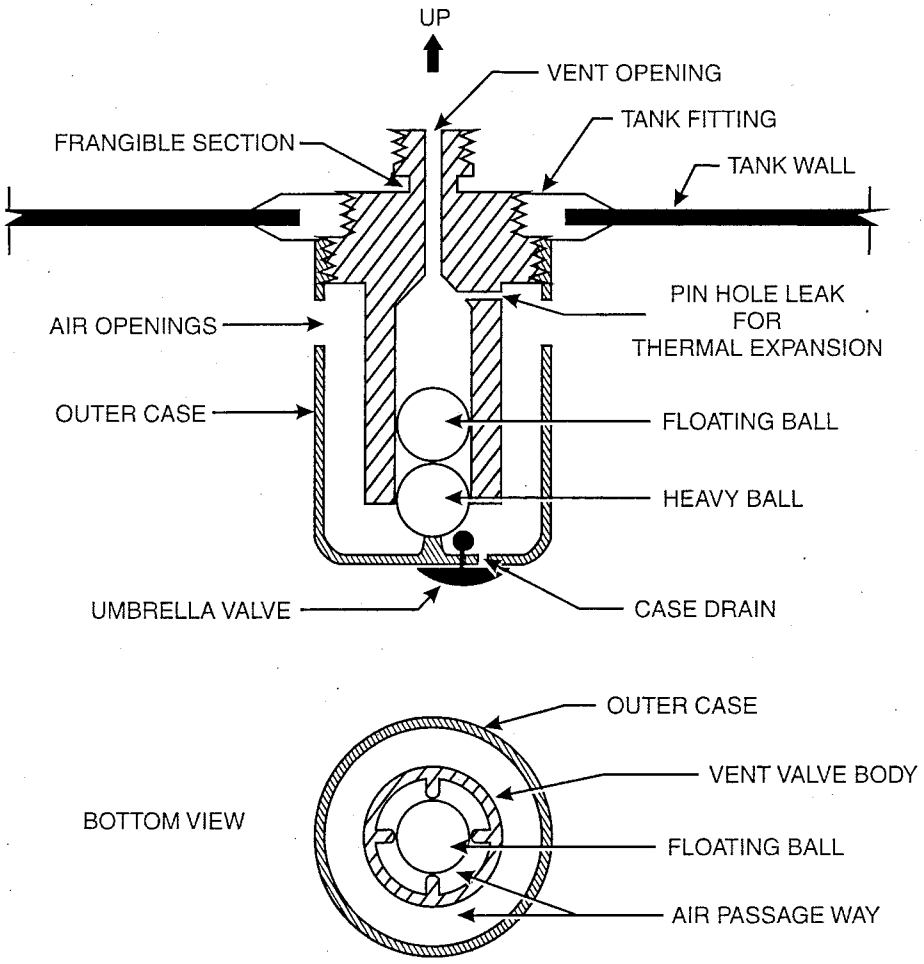

FIGURE 4-6. ROLLOVER VENT VALVE PASSES AIR BUT CLOSES IN ANY ATTITUDE WHEN FUEL TRIES TO ESCAPE

If the fuel system is to be pressure refueled, it should be noted that a large bypass system for tank overpressurization should be considered. This capability can be built into the vent valve or can be incorporated in a separate unit. Large spring-loaded pressure-relief valves are in current use today. Rollover protection is provided by the spring valve, but tank overpressurization due to tank compression causes fuel to be expelled at the vent outlet. In either case, however, care must be taken to ensure that spillage resulting from overpressurization due to tank compression during a crash is released away from aircraft occupants and ignition sources.

4.2.8 Drain Valves.

Sump drains are a frequent source of fuel spillage because their design dictates that they be located at the lowest point in the tank, in close proximity to the most probable impact area. Figure 4-7 illustrates some design concepts that permit sump drainage without the drain protruding beyond the face of the tank.

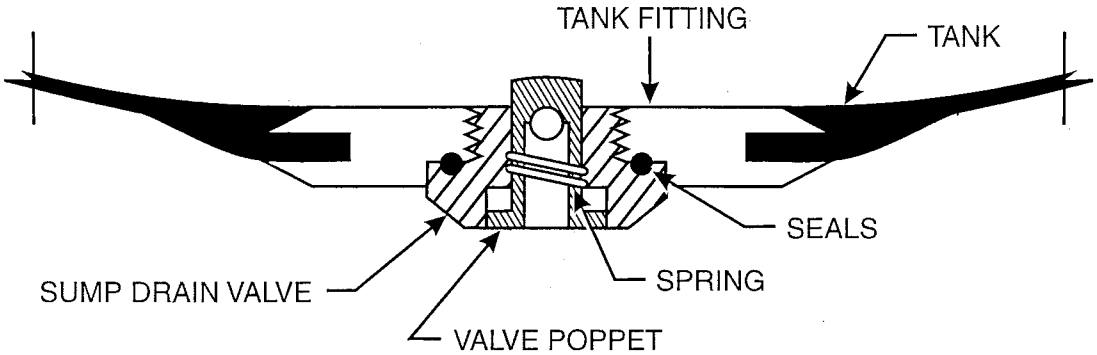

FIGURE 4-7. SUMP DRAIN VALVE DESIGNED TO RESIST OPENING OR DAMAGE DURING CRASH IMPACT

4.2.9 Spillage Control Valve.

During the 1980s, two different valves were designed, developed, tested, and the FAA certified them for use on light aircraft [48]. These valves, installed in the main engine fuel line before it enters the engine compartment, were designed to stop the flow of fuel to the engine area when the engine is not running, as in a crash. Normally, when a fuel or oil line is broken, fluid will drain out. If this drainage is in the engine area, ignition by the hot surfaces or other sources is likely. The use of breakaway self-sealing valves of either the frangible or quick-disconnect type can stop the spillage flow, but they require displacement and resistive forces to be triggered or operated. In many small aircraft, the structure is simply not strong enough to allow the creation of forces great enough to operate the breakaway valves. The structure can be locally reinforced, cable lanyards can be used, or both if necessary; however, the reinforced approach depicted in figure 4-8 uses neither.

The spillage control valve assembly shown in figure 4-8 consists of a valve body assembly, pilot-pressure-operated check valve components, a manual by-pass plunger, a manual by-pass control cable assembly, and associated seals and O-rings. When the aircraft engine is operating under normal conditions, fuel is drawn from the fuel tanks through fuel lines to the spillage control

valve. Fuel enters the spillage control valve assembly, passes through the internal valve components and exits, passing on to the airframe-mounted fuel filter and on to the engine-driven fuel pump.

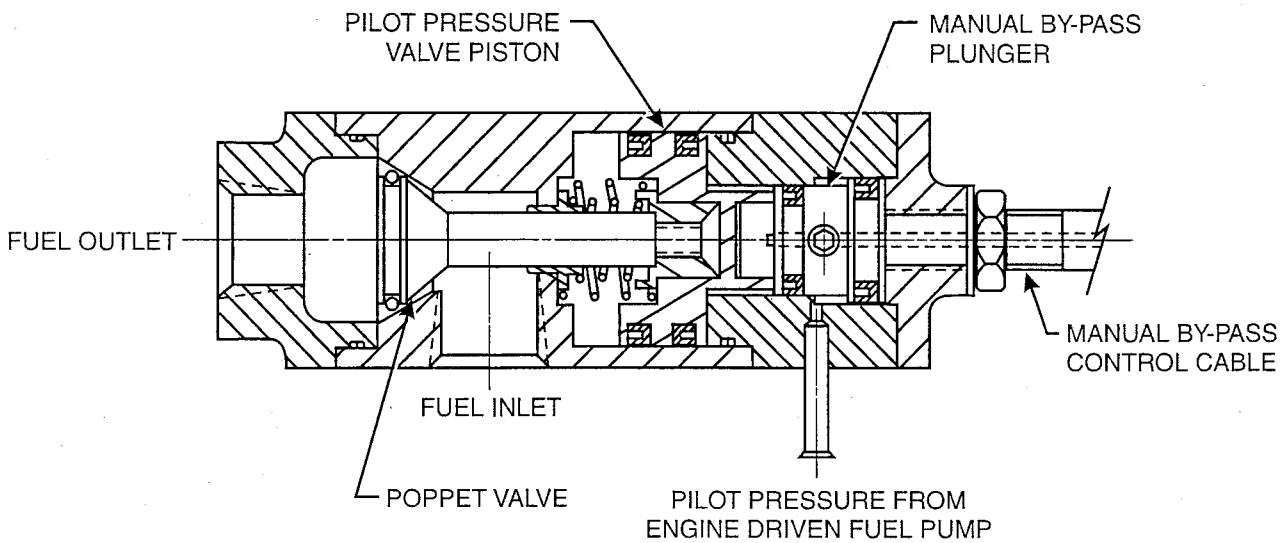

FIGURE 4-8. SPILLAGE CONTROL VALVE DESIGNED TO STOP FUEL FLOW IF ENGINE QUITS OR IF DOWNSTREAM FUEL LINES SEPARATE

When the aircraft engine is operating under normal conditions, pilot pressure holds the valve open. Statically, when the aircraft is not operating and the engine start-fuel boost pump is off, fuel is prevented from flowing past the engine firewall by the spillage control valve assembly. In the static condition, no fuel pressure (pilot pressure) is available to the spillage control valve assembly so the valve remains closed.

The FAA certified spillage control valves require more than twice the head pressure produced by full fuel tanks, located as high above the valve as is probable in an accident, to open the poppet.

Under conditions in which sudden engine stoppage is encountered i.e., blade strike, fuel system line failure, or foreign object ingestion, the spillage control valve assembly reacts to the loss of pilot pressure and stops fuel flow. The condition of sudden engine stoppage is identical to the static condition of the system.

Normal starting and engine operation on aircraft equipped with the spillage control valve is in accordance with the normal aircraft procedure, with the exception that the manual bypass lever of the spillage control valve must be actuated prior to turning on the start-fuel boost pump. After engine start-up, the manual bypass lever is returned to the normal position.

In-flight restart of the engine is also in accordance with the recommended normal aircraft procedure, except that the manual bypass lever must be activated prior to turning on the start-fuel boost pump. Subsequent to a successful engine restart, the manual bypass lever is returned to the normal position.

The valve is designed so that failure of pilot-fuel pressure to reach the valve, i.e., pilot-pressure line breakage, will not cause engine stoppage. The valve is sized so that the engine-driven fuel pump can pull enough fuel through the spillage control valve to obtain the maximum, as well as idle, engine power. Operating with the valve in this mode is similar to operating in the bypass mode of a filter or similar type component. Should the pilot-pressure fuel line break (rupture), the resulting spillage can be prevented or held to a minimum by incorporating a self-sealing breakaway valve, a flow restricting orifice, or both.

4.3 ASSESSMENT OF CURRENT STATUS OF CRFS DESIGN.

The current status of CRFS design can be assessed from three different aspects: (1) the importance a particular item has in the overall system; (2) the technical knowledge available for the design of crash-resistant fuel systems and components; and (3) the level of implementation in current systems. The authors have attempted to make this assessment, albeit arbitrarily, from their perspective of each having over 35 years of experience developing CRFS technology. Their assessments are contained in table 4-1, which addresses specific CRFS components, and in table 4-2, which addresses the correlative factors.

Both tables list specific components and/or factors that must be considered in CRFS design. Each of these items is evaluated with respect to (1) how critical this particular factor is in CRFS design, (2) how much knowledge relating to CRFS design is known about the factor, and (3) how much this knowledge has been implemented in actual CRFS designs.

Each factor is rated in all three areas on a scale from 1 to 5, with 1 being the worst or lowest level and 5 being the best or most important. For instance, a 5 in column A of both tables signifies that this component or factor is of primary importance in CRFS design, while a 1 means that the component or factor should be considered but does not take precedence over other considerations in CRFS design. A 5 in column B of table 4-1 means that the knowledge to design a particular crash-resistant component is extensive and complete, or, in column C, that this particular component is being extensively used in current CRFS designs. Likewise, a rating of 1 in column B of table 4-2 means that very little is known about the factor or that the knowledge is unsatisfactory for CRFS design. A 1 in column C of table 4-2 indicates that this factor is not being used effectively to any extent in CRFS design. In many instances, there is a significant difference in the assessment of a factor involved in CRFS design for military and for civil helicopters. In this instance, the ratings for both the civil and military designs are given. The civil rating is listed first, followed by the military rating (e.g., 2/5 means that the civil sector received a rating of 2 while the military sector received a rating of 5).

Tables 4-1 and 4-2 provide a general idea of areas where future research is most necessary and where implementation of CRFS is most lacking. To use the tables for prioritizing or selecting research and/or design projects, the level of importance should be of the highest order (e.g., a rating of 5 in column A). Then, for whichever major component or factor is selected, the lowest number under column B indicates where more research is needed. The lowest number in column C signifies the lowest implementation or application of the factor. A low number here indicates a need for design and/or implementation of a CRFS component (table 4-1) or better utilization of available knowledge in CRFS design (table 4-2).

TABLE 4-1. CRASH-RESISTANT FUEL SYSTEM COMPONENTS

Component		A	B	C	
1.1	Tanks	5		C	M
	Bladders		5	3	5
	Integral		2	1	2
	Other		2	1	1
1.2	Fuel Lines	5		C	M
	Flexible		4	3	5
	Rigid		4	3	4
1.3	Valves	4		C	M
	Tank selector		4	2	4
	ON/OFF		4	2	4
	Single point pressure refueling		4	2	5
	Check		5	3	5
	Drain		5	3	5
	Vent		5	1	5
1.4	Couplings	5		C	M
	Self-sealing (quick disconnect)		5	2	5
	Self-sealing, breakaway (quick disconnect)		4	1	5
	Self-sealing, breakaway (frangible)		5	3	5
	AN/MS plumbing		4	3	5
	Nipples		2	1	1
1.5	Miscellaneous Components	5		C	M
	Pumps		4	3	5
	Filler openings		5	3	5
	Filler caps		5	3	5
	Filters		3	3	3
	Frangible fasteners		5	3	4
	Fuel quantity sensor		5	3	4

A = Level of crash resistance importance
B = Level of crash resistance knowledge available for component integration
C = Level of crash resistance knowledge integrated into component design

C = Civil
M = Military

5 = Best/highest
1 = Worst/lowest

TABLE 4-2. FACTORS AFFECTING CIVIL CRFS DESIGN

FACTOR		A	B		C	
			C	M	C	M
1.1	Level of Crash Severity Desired	5				
	Human tolerance		5	5	4	4
	Load attenuation		3	5	3	4
1.2	Crash Environment at the Severity Level Selected	5				
	Impact velocities		2	4	2	5
	Impact attitudes		2	4	2	5
	Anticipated structural deformation		3	5	3	5
1.3	Fuel System Behavior	5				
	Probable fuel spillages		3	5	2	5
	Probable ignition sources		3	5	3	5
1.4	Fuel Characteristics	4				
	Typical liquid fuels		4	4	4	4
	Modified fuels		2	2	1	1
1.5	Standards	4				
	FARs		4	N/A	5	N/A
	SAE/DOD		3	3	4	5
	Design guides		3	5	3	4
	Advisory circulars		4	N/A	5	N/A
1.6	Quality and Quantity of Accident Data	5				
	Investigator competence		2	4	2	5
	Investigator training		2	4	2	5
	Data storage		1	4	2	5
	Data retrieval		1	5	2	5
	Feedback		1	5	2	5

A = Level of crash resistance importance
B = Level of knowledge related to crash resistance issues
C = Level of knowledge being applied

C = Civil
M = Military

5 = Best/highest
1 = Worst/lowest

In examining table 4-1, several general trends are apparent. Perhaps the most noticeable is that all but one of the general component areas have the highest level of importance (5 in column A). This reflects the fact that a CRFS must work as a complete system. It is only as effective as its weakest link. Also apparent, with only a few exceptions, is that the basic knowledge for CRFS component design and implementation in rotary-wing aircraft is well advanced.

Column C in table 4-1 has been divided into separate ratings for the civil and military sectors. This was necessary because of the much lower implementation of CRFS components in the civil sector. The lower ratings in column C indicate which components must be improved or better

utilized in civil CRFS. Some components can be made more crash resistant by making them sturdier or redesigning them. The latter is usually better, especially if weight is a concern. In the case of the fuel tanks, bladders have been chosen for crash resistance because the knowledge to make integral and other tanks crash resistant has not been developed.

In table 4-2 the level of knowledge (column B), as well as utilization of that knowledge (column C), has been divided into separate ratings for the civil and military factors. This is because the knowledge of the actual crash environment of civil helicopters is not nearly as complete as for military helicopters. Much of this discrepancy is due to the lack of adequate accident investigation procedures and accident data storage and retrieval in the civil sector. This issue has been discussed at length in section 3 of this report.

The predominant criterion for manufacturers and designers is the level of crash severity that must be accommodated by the CRFS. Since the principal objective of the CRFS is to protect the aircraft occupants from fire in accidents that approach the limits of survivability due to impact forces, the crash environment must be well understood in order to establish the severity level for CRFS design. Although civil helicopter manufacturers could adopt the well-defined severity levels based on military accident data, they have chosen, instead, to rely on the inadequate data available in the civil sector. Thus, the level of knowledge being applied in the civil sector (column C, table 4-2) must also be rated considerably lower than for the military sector.

5. CURRENT CRFS STANDARDS (MILITARY AND CIVIL).

5.1 OVERALL SYSTEM.

Current helicopter crashworthiness standards have evolved from U.S. Army-sponsored studies that began in 1960. The Aviation Safety Engineering and Research Division of the Flight Safety Foundation studied specific relationships among crash forces, structural failure, postcrash fires, and occupant injuries. By 1965, sufficient data had been generated to support consolidation into a summary of the then-current state-of-the-art crash survival design techniques which were published in the first issuance of the U.S. Army's Crash-Survival Design Guide (CSDG), TR 67-22, published in 1967 [21].

5.2 MILITARY STANDARDS AND SPECIFICATIONS.

5.2.1 MIL-STD-1290 (series): Light Fixed- and Rotary-Wing Aircraft Crash Resistance.

The third edition (1971) of the CSDG, TR-71-22, formed the basis for the original (1974) version of the U.S. Army-sponsored military standard for "Light Fixed- and Rotary-Wing Aircraft Crash Resistance," Military Standard 1290 [25].

§5.5 of MIL-STD-1290: "Postcrash Fire Protection," established detailed standards for:

a. Fuel containment

b. Fuel tank design criteria, including fittings and interconnections for both main and extended range tanks

   (1) Fuel lines
   (2) Frangible attachments
   (3) Self-sealing breakaway couplings and valves

c. Separation of fuel and ignition sources

d. Separation of flammable fluids from occupiable areas

e. Barriers

§5.5.2 contains detailed design requirements for minimizing susceptibility to postcrash fires from all flammable fluids.

Appendix A, §10, includes test methods for determining qualifications of fuel system components.

The original MIL-STD-1290 (January 25, 1974) was superseded by MIL-STD-1290A on September 26, 1988, which in turn was cancelled by the Department of Defense in December 1995. There is currently no superseding documented standard. Nevertheless, the criteria

established by MIL-STD-1290A are acknowledged to be the current state-of-the-art of helicopter crashworthiness.

5.2.2 ADS-11 (series): Survivability Program, Rotary Wing.

The current version, ADS-11B, was issued in May 1987, superseding ADS-11A, which was issued in April 1976. ADS-11B is currently in effect [49].

§5.3, "Crashworthiness," establishes the criteria for designers to address, as a minimum, structural crashworthiness, crew and troop retention, injurious environment, postcrash fire potential, and evacuation.

§5.3.1 requires that contractors define their design concepts for achieving the levels of crashworthiness specified in the System Specification. It expects descriptions of features, analyses and estimates for effectiveness of each of the components and subsystems listed in appendix I to the standard. Appropriate crashworthiness tests are specified in Aeronautical Design Standard ADS-36: "Rotary Wing Aircraft Crash Resistance."

Appendix I to ADS-11B sets out specific criteria for evaluating aircraft crash survivability. Postcrash fire potential rating areas include:

a. Spillage Control

(1) Fuel containment
(2) Oil and hydraulic fluid containment
(3) Flammable fluid lines
(4) Firewall
(5) Fuel flow interruptors

b. Ignition Control

(1) Induction and exhaust flame location
(2) Location of hot metals and shielding
(3) Engine location and tiedown strength
(4) Battery location and tiedown strength
(5) Electrical wire routing
(6) Boost pump location and tiedown strength
(7) Inverter location and tiedown strength
(8) Generator location and tiedown strength
(9) Lights location and tiedown strength
(10) Antenna locations and tiedown strength

¶10.2.a. is significant in that it specifies a total systems approach to assigning evaluation ratings; e.g., "...specific shortcomings in ignition control...need not be partially or totally penalized if spillage control is substantiated...."

¶10.2.b. establishes even more stringent requirements that: "the evaluation will be conducted against the optimum crashworthiness criteria stated herein in lieu of RFP and/or System Specification requirements which may have been subject to tradeoff."

Detailed criteria for determining the postcrash fire potential ratings for the areas specified above are contained in ¶10.2.3 of ADS-11B.

5.2.3 ADS-36: Rotary Wing Aircraft Crash Resistance.

Aeronautical Design Standard (ADS) 36: "Rotary Wing Aircraft Crash Resistance," was issued on 1 May 1987 and currently remains in effect [50].

§5.5 requires that aircraft systems be designed to possess specific postcrash fire protection characteristics, specified therein. Major characteristics addressed include:

a. Fuel containment

    (1) Fuel tanks, main
    (2) Fuel tanks, extended range
    (3) Fuel lines
    (4) Frangible attachments
    (5) Self-sealing breakaway couplings/valves

b. Separation of fuel and ignition sources
c. Separation of flammable fluids and occupiable areas
d. Shielding
e. Fuel drains
f. Fill units and access covers
g. Fuel pumps
h. Fuel filters and strainers
i. Fuel quantity indicators
j. Vents
k. Hydraulic and oil systems

    (1) Hydraulic and oil lines and couplings
    (2) Hydraulic and oil systems components
    (3) Oil coolers

l. Electrical system

    (1) Wiring
    (2) Batteries and electrical components

m. Airframe and interior materials

Appendix A, §10, to ADS-36 sets forth methods for testing systems, subsystems and components, including:

a. Fuel tank crashworthiness
b. Frangible attachments (static and dynamic testing)
c. Self-sealing breakaway valves (static and dynamic tests)
d. Hose assemblies (fuel, oil, and hydraulic)
e. Flammability tests for airframe and interior materials
f. Full scale whole aircraft and sectional crash tests

5.2.4 Aircraft Crash-Survival Design Guide (TR-89-D-22E).

The most recent edition of the U.S. Army's Aviation Systems Command (AVSCOM) Crash Survival Design Guide (CSDG) was issued in 1989 and contains the most up-to-date guidance for designing crashworthy fuel systems to minimize and mitigate the effects of postcrash fires in Volume 5, "Aircraft Postcrash Survival" [45]. Section 4 establishes basic design guidelines that will inherently resist flammable fuel spillage and ignition during survivable accidents. This objective requires that designs must integrate all potentially contributory aircraft systems by considering optimization between operational and maintenance functionality and crashworthiness. The CSDG's priority goals assume the following priority:

a. Prevent spillage; but if some does occur, design to:
b. Prevent ignition; but if some does get ignited, design to:
c. Isolate.

5.2.5 Military Specifications (MIL-SPECs).

Numerous military specifications were developed over the years to address specific component requirements within crashworthy fuel systems. Many were cancelled without supersession by the Department of Defense during the 1990s in its attempt to minimize the number of detailed specifications visited upon contractors and to transition to performance specifications. Unfortunately, there was little evaluation of the significance of the cancelled specifications for their effect on the suitability, safety, and survivability of weapons systems that might be procured absent detailed performance criteria. Although there is currently an effort underway to memorialize the knowledge and experience of DoD agencies and appropriate civilian standards and practices organizations (e.g., SAE and ASTM), designers and procurers of aeronautical systems must guard that the current absence of corporate memory does not permit the loss of historical lessons so dearly learned (see §5.2.6).

- MIL-T-27422B: "Tank, Fuel, Crash-Resistant Aircraft"

  Of the various military specifications relating to CWFS the most significant is undoubtedly MIL-T-27422B [23]. Although published in February 1970 (Amended in April 1971), MIL-T-27422B remains the most current specification covering suitable design and materials for fabrication and testing of crashworthy fuel tanks.

Other pertinent specifications include:

- MIL-H-25579E (current version): "Hose Assembly, Tetrafluoroethylene, High Temperature, Medium Pressure, General Requirements for"

- MIL-V-27393/A: "Valve, Safety, Fuel Cell Fitting, Crash-Resistant General Specification for" Cancelled, superseded by SAE ARP 1616A dtd April 5, 1991

- MIL-H-38360: "Hose Assembly, Tetrafluoroethylene, High Temperature, High Pressure, Hydraulic and Pneumatic" Cancelled, superseded by SAE AS 604 and AS1339

- MIL-H-83796: "Hose Assembly, Rubber, Lightweight, Medium Pressure, General Specification"

- U.S. Air Force Guide Specification (AFGS-87154A): "Fuel Systems—General Design Specification for"

Air Force Guide Specification 87154A, issued 1 July 1992, is a "fill in the blanks" design specification for aircraft fuel systems which appears to have been developed as an initial effort toward replacement of detailed specifications and standards by performance specifications [51]. AFGS-87154A contains no reference either to postcrash fires or to crash-resistant fuel systems' design. (Current military initiatives toward replacing detailed specifications and standards are discussed in sections 5.2.6 and 5.2.7.)

5.2.6 Joint Service Specifications (From Foreword to Draft Joint Service Specification Guide—Air System (JSSG-2000) Dated 29 October 1998, Superseding AFGS-87253A of 19 March 1993 [52]).

During the 1970s, the Department of Defense (DoD) and the Defense Science Board (DSB) investigated the cost of DoD acquisition development programs. DoD results were reported in a 1975 memorandum from the Deputy Secretary of Defense that cited the blanket application and unbounded subtiering of development specifications and standards as a major cost driver. The DSB investigation concluded that, rather than specifying functional needs, the documents dictated design solutions. It also noted that blanket applications of layer upon layer of "design specifications" actually represented a "bottom-up" versus a "top-down" process that not only failed to develop systems responsive to user operational needs but also inhibited technical growth. As a result of these findings, DoD directed that policies be established to require tailored application of development specifications to all new system acquisitions. The June 1994 Memorandum from the Secretary of Defense on "Specifications & Standards—a New Way of Doing Business" further emphasized these policies. (p.ii)

Draft JSSG-2000 Release Note states:

> This specification guide supports the acquisition reform initiative and is predicated on a performance based business environment approach to product development. As such it is intended to be used in the preparation of performance specifications. It is one of a set of specification guides. It is the initial release of

this guide. In this sense this document will continue to be improved as the development program is accomplished. (p. ii)

Draft JSSG-2000 defines the Specification Guides as:

> ...generic documents, intended to provide a best starting point for tailoring a specification for specific development program applications. Furthermore, they are intended for common use among the services. This not only facilitates joint programs, but also provides industry a single, consistent approach on defining requirements. (p. ii)
>
> Joint Service Specification Guides state generic performance parameters with the design-specific portions of the requirements left blank. Specification Guides provide a one-to-one correlation of...performance requirements to verifications. They include a guidance handbook to assist the document user in tailoring the specification requirements and verifications for program-specific applications. The handbook provides, for each requirement and associated verification, rationale for including the requirement, guidance to assist in filling in the blanks and tailoring, and
>
> ***"lessons learned that present valuable experiences related to the requirements and verifications." (p. ii) (emphasis added)***
>
> The fundamental objectives of Draft JSSG-2000 are to provide consistent organization and content guidance for describing system requirements as translated from validated needs. System requirements must be:
>
> - meaningful in terms of meeting user operational needs;
> - performance-based and avoid specifying the design;
> - measurable during design, development, and verification;
> - achievable in terms of performance, cost, and schedule; and
> - complete in the context of the system life cycle and in treating system products and processes. (p. iii)

The final paragraph of the Foreword to Draft JSSG-2000 contains the following caveat:

> "There is, however, requirement information that remains in work along with most of the verification information. These will be supplied at a later date. Expect this document to be periodically updated as the requirement and verification information is completed and comments/concerns from potential document users are received and evaluated."; and
>
> ***"a. This specification guide has not been specifically reviewed to assure that the requirements, verifications, and their guidance are adequate for application to rotary wing or unmanned air vehicles." (p.iv) (emphasis added)***

An example of the requirements information proposed in Draft JSSG-2000 relevant to mitigation of postcrash fires and consequent crashworthy fuel systems is quoted from §3.3.6: "System Safety":

> The cumulative system loss rate shall not be greater than ____ per flight hour at a system maturity of not less than ____ flight hours. This rate includes system losses resulting from ground and flight operations as well as material and design related losses. The cumulative system loss rate for materials and design causes shall be not greater than ____ per flight hour at system maturity of not less than ____ flight hours.

¶3.3.6.1: "Operational Safety," offers the following boilerplate for requirements specifications:

> The system shall incorporate design features that promote safety of the crew, passengers, and maintenance and training personnel at all levels. The system design shall conform to the following safety and health standards: _____. [fill in the blank]

Specific subsets of Operational Safety are limited to Foreign Object Damage (FOD), Acoustic Noise and Explosives. Postcrash fire as an operational safety consideration is conspicuous by its absence.

Draft JSSG-2000's apparent exclusion of application to rotary-wing aircraft is particularly disturbing in view of the DoD's prior cancellation of specifications and standards that apply to their design. Operators, designers, and manufacturers will do well to ensure that verified methods for minimizing postcrash fires, by applying established crashworthy fuel system design criteria, are specified for future procurements.

5.2.7 JSSG-2009: Air Vehicle Subsystems Specification Guide.

Appendix E to JSSG-2009 presents representative examples of boilerplate "fill-in-the-blanks" specification criteria [53]. ¶E.3.4.5.6.13 is the exemplar requirement specification for "Crashworthiness." It reads

> E.3.4.5.6.13 Crashworthiness
>
> If required, all fuel tanks, attachments, manifolds, fuel lines, and fittings installed inside the air vehicle shall be crashworthy. Each fuel tank configuration in the air vehicle shall be capable of withstanding, without leakage, __(TBS)__ foot per second impact.
>
> Fuel tanks, attachments, manifolds, fuel lines, and fittings shall be designed to allow relative movement and separation between the tank and structure without fuel spillage during a survivable crash.

Requirement Rationale (3.4.5.6.13)

Relative motion between fuel tank, plumbing and structure is unavoidable during a survivable crash. Leakage at fittings, valves, or attach points will occur unless specifically designed to prevent leakage.

Requirement Guidance (3.4.5.6.13)

TBS should be filled in with the maximum survivable impact velocity of a human being. It is currently understood to be approximately 60 ft/sec.

NOTE: The source of the 60 ft/sec. figure in the above paragraph is unknown and its use is confusing and misleading. Human tolerance to rapid speed changes is measured in terms of G forces over a specific time period, applied in a specific direction. Military helicopters that crash with impact velocities in the 60 to 70 ft/sec. speed range are considered to be potentially survivable if they incorporate crashworthy features such as safe occupant space, energy absorbing seats, CRFS.

Requirement Lessons Learned (3.4.5.6.13)
(TBD)

¶E.4.4.5.6.13 is the exemplar verification specification for "Crashworthiness." It reads:

E.4.4.5.6.13 Crashworthiness

If required, all fuel tanks installed inside the air vehicle shall be crashworthy. Each fuel tank configuration in the air vehicle shall be capable of withstanding, without leakage, a __(TBS)__ foot free-fall drop, onto a non-deforming surface when filled with water to normal capacity. If desired, the test can be performed with a representative portion of air vehicle structure surrounding the tank. The capability of each fuel tank configuration to withstand the free-fall drop test shall be verified by __(TBS)__.

Verification Rationale (4.4.5.6.13)
(TBD)
Verification Guidance (4.4.5.6.13)

TBS should be filled in with component test.

Verification Lessons Learned (E.4.4.5.6.13)

The production tank with all openings suitably closed should be filled to normal capacity with water and air removed. The fuel tank should be placed upon a platform and raised to a height of 65 feet. A light cord may be used to support the tank in its proper attitude. Tanks installed in air vehicle structure should be raised to a height of 65 feet; no platform should be used. The platform and structure

should be released and allowed to drop freely onto a non-deforming surface so that the tank and structure should impact in a horizontal position ±10°. After the drop, there should be no leakage.

Despite these limited exemplars' attempts to memorialize at least the qualitative characteristics of current CRFS specifications, current efforts underway to replace validated specifications and standards with performance specifications for the "new way of doing business" threatens to forfeit historical lessons dearly learned. Wholesale cancellation of utilitarian specifications and standards by the DoD during the 1990s, without supersession, reflected little esteem for those characteristics which have had positive effects on weapons systems' suitability, safety, and survivability. Detailed performance criteria must be derived from effective prior specifications and standards which themselves grew out of operational experience in order to avoid resurrecting the fatal errors of history.

5.2.8 MIL-STD-882D, Dated 10 February 2000: "Standard Practice for System Safety".

This document states: "The system safety requirements to perform throughout the life cycle for any system, new development, upgrade, modification, resolution of deficiencies, or technology development. When properly applied, these requirements should ensure the identification and understanding of all known hazards and their associated risks; and mishap risk eliminated or reduced to acceptable levels. The objective of system safety is to achieve acceptable mishap risk through a systematic approach of hazard analysis, risk assessment, and risk management. This document delineates the minimum mandatory requirements for an acceptable system safety program for any DoD system."

5.3 CIVIL SPECIFICATIONS.

The most recent advance in civil rotorcraft CRFS regulatory requirements is contained in Amendments 27-30 and 29-35 to Title 14, U.S. Code of Federal Regulations, Parts 27 and 29, respectively. These amendments, effective on November 2, 1994, were originated by Notice of Proposed Rulemaking (NPRM) No. 90-24, issued September 27, 1990 and subsequently corrected on December 11, 1990. The Final Rule was published in Federal Register, Vol. 59, No. 190, dated Monday October 3, 1994, 50380-50388.

5.3.1 Normal Category Rotorcraft.

Amendments 27-30 and 29-35 modified 14 CFR Part 27 and Part 29 in substantially identical ways. The text for Part 27 follows:

Original §27.561: General

This section was amended by adding new paragraph (d) as follows:

> (d) Any fuselage structure in the area of internal fuel tanks below the passenger floor level must be designed to resist the following ultimate inertial factors and loads and to protect the fuel tanks from rupture when those loads are applied to that area:

(i) Upward – 1.5g
(ii) Forward – 4.0g
(iii) Sideward – 2.0g
(iv) Downward – 4.0g

New §27.952: Fuel System Crash Resistance

This section was added as follows:

Unless other means acceptable to the Administrator are employed to minimize the hazard of fuel fires to occupants following an otherwise survivable impact (crash landing), the fuel systems must incorporate the design features of this section. These systems must be shown to be capable of sustaining the static and dynamic deceleration loads of this section, considered as ultimate loads acting alone, measured at the system component's center of gravity, without structural damage to system components, fuel tanks, or their attachments that would leak fuel to an ignition source.

(a) Drop test requirements. Each tank, or the most critical tank, must be drop-tested as follows:

(1) The drop height must be at least 50 feet.

(2) The drop impact surface must be nondeforming.

(3) The tank must be filled with water to 80 percent of the normal, full capacity.

(4) The tank must be enclosed in a surrounding structure representative of the installation unless it can be established that the surrounding structure is free of projections or other design features likely to contribute to rupture of the tank.

(5) The tank must drop freely and impact in a horizontal position ±10°.

(6) After the drop test, there must be no leakage.

(b) Fuel tank load factors. Except for fuel tanks located so that tank rupture with fuel release to either significant ignition sources, such as engines, heaters, and auxiliary power units, or occupants is extremely remote, each fuel tank must be designed and installed to retain its contents under the following ultimate inertial load factors, acting alone.

(1) For fuel tanks in the cabin:

(i) Upward – 4g.

(ii) Forward – 16g.
(iii) Sideward – 8g.
(iv) Downward – 20g.

(2) For fuel tanks located above or behind the crew or passenger compartment that, if loosened, could injure an occupant in an emergency landing:

(i) Upward – 1.5g.
(ii) Forward – 8g.
(iii) Sideward – 2g.
(iv) Downward – 4g.

(3) For fuel tanks in other areas:

(i) Upward – 1.5g.
(ii) Forward – 4g.
(iii) Sideward – 2g.
(iv) Downward – 4g.

(c) Fuel line self-sealing breakaway couplings. Self-sealing breakaway couplings must be installed unless hazardous relative motion of fuel system components to each other or to local rotorcraft structure is demonstrated to be extremely improbable or unless other means are provided. The couplings or equivalent devices must be installed at all fuel tank-to-fuel line connections, tank-to-tank interconnects, and at other points in the fuel system where local structural deformation could lead to the release of fuel.

(1) The design and construction of self-sealing breakaway couplings must incorporate the following design features:

(i) The load necessary to separate a breakaway coupling must be between 25 to 50 percent of the minimum ultimate failure load (ultimate strength) of the weakest component in the fluid-carrying line. The separation load must in no case be less than 300 pounds, regardless of the size of the fluid line.

(ii) A breakaway coupling must separate whenever its ultimate load (as defined in paragraph (c)(1)(i) this section) is applied in the failure modes most likely to occur.

(iii) All breakaway couplings must incorporate design provisions to visually ascertain that the coupling is locked together (leak-free) and is open during normal installation and service.

(iv) All breakaway couplings must incorporate design provisions to prevent uncoupling or unintended closing due to operational shocks, vibrations, or accelerations.

(v) No breakaway coupling design may allow the release of fuel once the coupling has performed its intended function.

(2) All individual breakaway couplings, coupling fuel feed systems, or equivalent means must be designed, tested, installed, and maintained so that inadvertent fuel shutoff in flight is improbable in accordance with §27.955(a) and must comply with the fatigue evaluation requirements of §27.571 without leaking.

(3) Alternate, equivalent means to the use of breakaway couplings must not create a survivable impact-induced load on the fuel line to which it is installed greater than 25 to 50 percent of the ultimate load (strength) of the weakest component in the line and must comply with the fatigue requirements of §27.571 without leaking.

(d) Frangible or deformable structural attachments. Unless hazardous relative motion of fuel tanks and fuel system components to local rotorcraft structure is demonstrated to be extremely improbable in an otherwise survivable impact, frangible or locally deformable attachment of fuel tanks and fuel system components to local rotorcraft structure must be used. The attachment of fuel tanks and fuel system components to local rotorcraft structure, whether frangible or locally deformable, must be designed such that its separation or relative local deformation will occur without rupture or local tearout of the fuel tank or fuel system components that will cause fuel leakage. The ultimate strength of frangible or deformable attachments must be as follows:

(1) The load required to separate a frangible attachment from its support structure, or deform a locally deformable attachment relative to its support structure, must be between 25 and 50 percent of the minimum ultimate load (ultimate strength) of the weakest component in the attached system. In no case may the load be less than 300 pounds.

(2) A frangible or locally deformable attachment must separate or locally deform as intended whenever its ultimate load (as defined in paragraph (d)(1) of this section) is applied in the modes most likely to occur.

(3) All frangible or locally deformable attachments must comply with the fatigue requirements of §27.571.

(e) Separation of fuel and ignition sources. To provide maximum crash resistance, fuel must be located as far as practicable from all occupiable areas and from all potential ignition sources.

(f) Other basic mechanical design criteria. Fuel tanks, fuel lines, electrical wires, and electrical devices must be designed, constructed, and installed, as far as practicable, to be crash resistant.

(g) Rigid or semirigid fuel tanks. Rigid or semirigid fuel tank or bladder walls must be impact and tear resistant.

Other Sections of 14 CFR Part 27

New §27.967 was added to Part 27, and §§27.963, 27.973, and 27.975 were revised for consistency with other changes and to incorporate the load factors cited in §27.952.

5.3.2 Transport Category Rotorcraft.

New §29.952 was added, reading identically to §27.952 except for references to §§29.xxx in lieu of 27.xxx. Changes were also incorporated into §§29.963, 29.967, 29.973, and 29.975 for consistency with similar sections of 14 CFR Part 27.

These amendments incorporated the successful strategies that were imposed in military rotorcraft by MIL-T-27422B. The FAA issued Advisory Circular (AC) 29-2B on July 30, 1997, to specify alternative means for compliance and proof testing of the requirements established by 14 CFR 29.952 [54]. As of this writing, the FAA has yet to issue any Advisory Circular Guidance for CRFS in Normal Rotorcraft. However, in view of the identical wording of §27.952 to §29.952, it seems logical that normal rotorcraft designers following the guidance of AC 29-2B would not be far off the mark.

Among the related material, AC 29-2B cites military specification MIL-V-27393 (USAF), July 12, 1960: "Valve, Safety, Fuel Cell Fitting, Crash Resistant, General Specification for." (AC 29-2B, ¶447.b.@p.700). Both the original release of MIL-V-27393 in 1960 and its 1964 revision have been criticized for specifying restrictive features for self-sealing breakaway fittings designs that might not be necessary in an otherwise satisfactory fitting [11]. Almost 35 years ago that report concluded that:

> The sequence of operations, movement distances, loads required to operate the valves, and the envelope dimensions appear to be suitable for one particular design concept only, whereas the actual functional requirements of preventing fuel loss should be of primary importance....The restrictive requirements established by MIL-V-27393A have hindered the development of other design concepts. No fittings have ever been operationally certified to this specification.

MIL-V-27393 has been cancelled, and the AC 29-2B reference should be amended to read "SAE Aerospace Recommended Practice ARP 1616 Rev. A," dated April 05, 1991 [55].

It is ironic that civil rotorcraft design guidance has begun to incorporate military specifications for mitigating the incidence of postcrash helicopter fires at the same time that the DoD has chosen to rescind its detailed CRFS specifications in favor of more broadly based performance specifications. It is hoped that both communities can find common definitions that can incorporate the best design parameters from historical lessons to minimize the incidence of postcrash fires and their resultant carnage.

6. FUEL SYSTEM CRASH-SURVIVABILITY EVALUATION.

6.1 POSTCRASH FIRE POTENTIAL RATING SYSTEM.

The Aircraft Crash Survivability Evaluation process that is part of Aeronautical Design Standard (ADS)-11B [48] is designed to numerically relate the crash survival potential of a particular aircraft design to what is considered optimum for each specific issue to be rated, e.g., the fuel system. Throughout the past thirty years, the rating system has been highly reliable in pinpointing potential crash survivability problem areas.

The primary objective of the evaluation process is to provide a tool for use during the preliminary design phase of new aircraft or for modification to existing aircraft. These early evaluations identify problem areas in sufficient time to accomplish design changes with a minimum cost in time and dollars.

The Aircraft Crash Survivability Evaluation is based on the probable performance of an aircraft in an upper limit survivable crash, since it is assumed that protection of the occupants to their upper limits of human survivability is the major goal in aircraft crashworthiness design.

When evaluating any aircraft from a crash survival point of view there are six basic factors that must be considered.

1. Crew retention system,
2. Passenger retention system,
3. Postcrash fire potential,
4. Basic airframe crashworthiness,
5. Evacuation, and
6. Injurious environment.

In order to develop a reasonable crash survivability rating, weighted values have been assigned to the various factors. The percent of weight assigned to each is based on their relative hazard potential. The six factors with their hazard potential are shown in table 6-1.

When performing the rating, the hazard potential percentage has been converted to an optimum point value where a perfect score on all six factors would equal 720. For existing aircraft not incorporating a crashworthy fuel system, inadequate restraint systems and postcrash fire have been equally responsible for injuries and fatalities in accidents so they were weighted at approximately 35% each. A poor score on either of these important items indicates a critical situation from a crash survival point of view—depending on such variables as number of occupants carried, operating terrain, and rescue facilities.

TABLE 6-1. AIRCRAFT SURVIVABILITY HAZARD RATING

	Hazard Potential	Optimum Points
1. Crew retention system	17.9%	125
2. Passenger retention system	17.2%	125
3. Postcrash fire potential	35.2%	255
4. Basic airframe crashworthiness	17.2%	125
5. Evacuation	8.3%	60
6. Injurious environment	4.2%	30
Totals	100%	720

Each of the six factors is in turn broken down into subfactors against which a hazard potential percentage has been assigned and converted to an optimum point value. The evaluator selects that portion of the optimum point value that each subfactor is worth and lists it accordingly. The criteria for the postcrash fire potential rating subfactors are listed in table 6-2 and discussed briefly on the following pages. When rating an aircraft, the subfactors are given a point value proportional to the desirable qualities outlined in this discussion.

TABLE 6-2. POSTCRASH FIRE POTENTIAL RATING

	Optimum Points	Actual Points
Spillage Control		
Fuel containment	60*	
Oil containment	20	
Flammable fluid lines	30	
Firewall	9	
Fuel flow interrupters	9	
Ignition Control		
Induction and exhaust flame location	30	
Location of hot metals and shielding	30	
Engine location and tiedown strength	15	
Battery location and tiedown strength	12	
Electrical wire routing	12	
Boost pump location and tiedown strength	7	
Inverter location and tiedown strength	6	
Generator location and tiedown strength	6	
Lights location and tiedown strength	5	
Antenna location and tiedown strength	4	
Total Points	255	

* If a range extension system is included in the evaluation, allow 40 points for primary fuel system and 20 points for the range extension system.

6.1.1 Spillage Control.

- Fuel Containment (Optimum = 60 points)

  Location (20% of total value) – 12 points

  The location of the fuel tank should be evaluated with respect to the anticipated impact area, occupiable area, large weight masses, and primary ignition sources.

  Vulnerability (20% of total value) – 12 points

  The vulnerability of a fuel tank should be evaluated with respect to possible tank ruptures caused by various aircraft structural failures, such as landing gear failure and vertical column deflection. Tank failures associated with structural displacement, such as ruptures around the filler neck, the fuel line entry and exit area, the quantity indicators, and the tiedown devices should also be considered.

  Construction Technique (50% of total value) – 30 points

  The construction technique is evaluated for two primary considerations. One is tank geometry and the other is tank construction materials.

  Tank Geometry

  Smooth contoured shapes are given the highest number of points, whereas irregular shapes and interconnected multicell tanks are given the lowest number of points.

  Cell Material

  The tank is given a certain number of points, depending on its construction.

Crash Resistant per MIL-T-27422B	30 points
Crash Resistant per MIL-T-5578C dated 26 July 1983*	12 points
Metal Canister	6 points
Integral	3 points

* MIL-T-5578 deals with self-sealing characteristics of fuel tanks when subjected to various caliber projectiles, and does NOT address crash resistance directly.

Fuel Boost System (10% of total value) – 6 points

The fuel boost pump should be evaluated according to its potential for causing fuel spillage due to fuel cell rupture or line failure. This includes location and method of fuel cell attachment.

- Oil and Hydraulic Fluid Containment (Optimum = 20 points)

Location (34% of total value) – 7 points

The location of the oil tank should be evaluated from the standpoint of its proximity to the anticipated impact area, occupiable area, large weight masses, and primary ignition sources.

Vulnerability (34% of total value) – 7 points

Evaluate from the standpoint of rupture resistance from other aircraft structure; e.g., control linkage failures causing puncture to the tank.

Construction and Tiedown Adequacy (32% of total value) – 6 points

Construction Methods

Construction methods are evaluated in descending order of oil-containing ability.

Cellular	6 points
Bladder	4 points
Sheet Metal	2 points

Tiedown Adequacy

Tiedown should be evaluated primarily on the adequacy of the system to safely support the tank during typical crash accelerations.

- Flammable Fluid Lines (Optimum = 30 points)

Construction (33% of total value) – 10 points

The construction of fuel lines should be judged in accordance with the hose material and couplings. Experience has shown that rigid lines fail before the flexible type; thus, flexible lines with a steel braided outer sheath are given the most points. Also included in this phase of the evaluation are the couplings. The fewer the couplings the better. Ninety degree couplings are less desirable than the straight type. Any coupling is less desirable than an uncut hose. Aluminum fittings usually fail before steel ones.

Routing (33% of total value) – 10 points

The routing of the fuel lines is an important consideration. The lines must not pass through areas where they can get trapped, cut, or pulled. Extra hose length (20-30% in areas of anticipated structural deformation) should be provided. Holes through which the fuel lines pass should be considerably larger than the O.D. of the hose.

Breakaway Fittings (33% of total value) – 10 points

Breakaway fittings or self-sealing breakaway valves should be installed on each fuel line that enters and exits the fuel tank. It is also advisable to have them installed at strategic locations throughout the system.

Firewall (Optimum = 9 points)

Evaluate the firewall from the standpoint of how well it will function as a shield between crash-induced fluid spillage and the various engine ignition sources.

Fuel Flow Interrupters (Optimum = 9 points)

Fuel flow interrupters are devices that block or divert the flow of spilled flammable fluids. There are many different methods to perform this function; including baffles, drain holes, drip fences and curtains.

6.1.2 Ignition Control.

Induction and Exhaust Flame Location (Optimum = 30 points)

Evaluate from the standpoint of:

(1) Location of expelled flames in relation to location of spilled flammable liquids.
(2) Fuel ingestion.

Location of Hot Metals and Shielding (Optimum = 30 points)

Evaluate from the standpoint of how well the hot items (temperatures above 400° F) are shielded or protected from fuel spillage. Components included are:

(1) Engine (external and internal)
(2) Exhaust System
(3) Heater
(4) APU

Engine Location and Tiedown Strength (Optimum = 15 points)

Consider sequences of engine separation. Where will the engine go and how will it affect the fuel cell, exhaust system, electrical wiring, and fuel and oil lines? Will the engine come into contact with spilled flammable fluids?

Retention strength is more important for helicopters in which the engine may be located above or just behind the fuel cell; it is of less consequence for pod-mounted engines.

Battery Location and Tiedown Strength (Optimum = 12 points)

Evaluate from the standpoint of tiedown strength and of vulnerability of the battery and attached wiring to damage during a crash. Location should also be as far as possible from fuel and oil tanks and anticipated areas of flammable fluid spillage.

Electrical Wire Routing (Optimum = 12 points)

Evaluate from the standpoint of crashworthiness of routing and vulnerability to damage during crash. Some excess length (20-30%) should be provided to allow for airframe deformation during a crash.

Fuel Boost System (Optimum = 7 points)

The fuel boost system should be evaluated with respect to its function as an ignition source. The following items should be considered:

(1) Power Supply. (An air pressure system is best, a hydraulic system is next best, and an electrical system is least desirable.)

(2) Pump Location. (A suction system with the pump located on the engine is best. A pump located outside the tank is next best and an internal tank mounted pump is least desirable.)

Inverter Location and Tiedown Strength (Optimum = 6 points)

Evaluate from the standpoint of tiedown strength and of vulnerability of the inverter and attached wiring to damage during crash. Location should be as far as possible from fuel and oil tanks and anticipated areas of flammable fluid spillage.

Generator Location and Tiedown Strength (Optimum = 6 points)

Evaluate from the standpoint of tiedown strength and of vulnerability of the generator and attached wiring to damage during a crash. Location should be as far as possible from fuel and oil tanks and anticipated areas of flammable fluid spillage.

Lights (Beacons, Search and Navigation (Optimum = 5 points)

Are the light filament and/or wires immediately surrounding the light attachments in the area of possible flammable fluid spillage?

Antenna Location (Optimum = 4 points)

Evaluate the antenna systems and their respective wiring from the standpoint of vulnerability to damage and location in the areas of possible flammable fluid spillage.

6.2 FUEL SYSTEM FIRE HAZARD LEVEL REDUCTION.

The previous section discussed the postcrash fire survivability factors and ratings criteria for helicopter fuel and electrical systems. This section presents a more detailed postcrash fire evaluation based on a rating system that has been used to determine the percent of overall fire hazard attributable to selected fuel system components [56]. An example evaluation is included to illustrate how the evaluation process is used to reduce the fire hazard level of the fuel system.

6.2.1 Evaluation Criteria and Process.

6.2.1.1 General.

Now that truly crash-resistant fuel systems exist in most U.S. military helicopters, and crashworthy hardware is available from many aerospace manufacturers, the fuel system designer is confronted with the problem of trying to determine how much fire safety can (or should) be included in any given fuel system design. An evaluation technique has been developed which allows a fuel system design to be evaluated to determine the relative "fire hazard level" for each component and/or hazardous area. Proposed crashworthy design changes can then be integrated into the original design and the system re-evaluated to determine the fire hazard level reduction. This process allows the designer to make intelligent tradeoffs, when necessary, in the fuel system design to achieve the desired reduction in the postcrash fire hazard.

For the evaluation to be performed, several assumptions must be made to establish a baseline or starting point.

1. The only fire threat being evaluated is the one from the fuel system. (The cargo, oils, etc. are not included in this evaluation, although they, too, could be evaluated if they were included in the evaluation process.)

2. The fire threat associated with the original fuel system is the basis from which the fuel system improvements are to be measured. As an example, the overall fire threat associated with the original fuel system is assumed to be 100%. Improvements in fuel system design are measured in percentage of reduction from the original 100% fire hazard level.

3. In order to evaluate the behavior of various fuel system designs, a crash environment that is typical of the serious, marginally survivable accident must be used as the basic reference point.

4. The evaluator must be skilled in accident investigation and reconstruction, fuel system design, aircraft and aircraft systems behavior during crash situations, and crash-resistant design.

The evaluation process is performed in the following manner.

1. The original fuel system is defined and the various component and/or hazardous areas are noted, as shown in figure 6-1 and in table 6-3.

2. Each identified component or hazardous area in the original fuel system is evaluated in accordance with the rating system (defined below) to determine its relative fire hazard level.

3. The original fuel system design is modified to incorporate various crashworthy hardware and/or design changes, and then re-evaluated in accordance with the rating system to determine the fire hazard level reductions attributable to the improved design.

NOTE: The original fuel system may be upgraded by the addition of only one crashworthy item, or by the addition of many crashworthy items. Each upgraded system must be evaluated as a complete system to determine the fire hazard level reduction attributable to separate design changes. The reason for the complete re-evaluation of each upgraded system is that the changing of one or more components and/or hazardous areas can, and usually does, influence the behavior of the remaining components and/or hazardous areas.

6.2.1.2 The Rating System.

The rating system evaluates the following four items:

1. The likelihood of fuel spillage occurring from the designated components and/or hazardous areas during the serious, marginally survivable crash.

2. The likelihood of fuel spillage from the designated component/area catching fire.

3. The likelihood of an existing fire that started at a designated component/area functioning as an ignition source for other probable spillages in other designated areas. (The chain reaction situation.)

4. The probable escape time available to occupants if a fire occurs at a designated component/area.

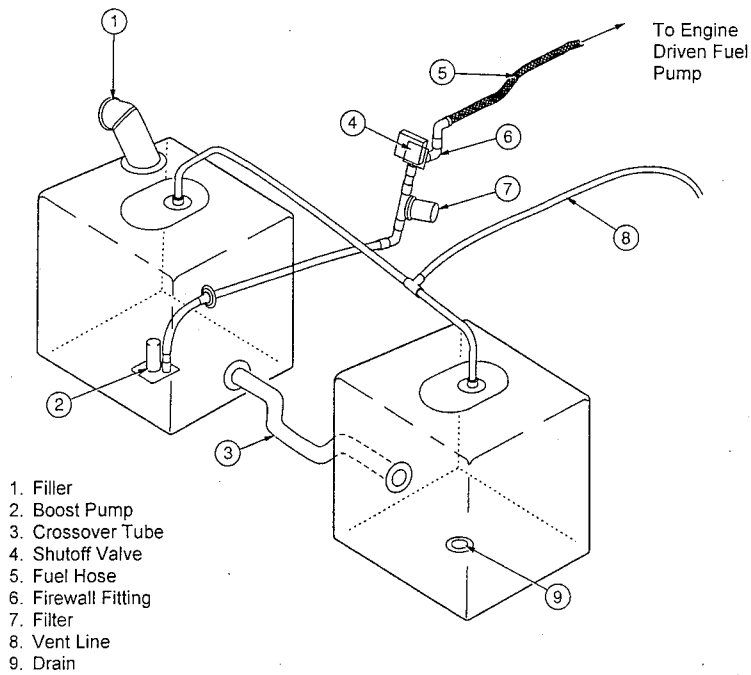

FIGURE 6-1. HYPOTHETICAL HELICOPTER FUEL SYSTEM

TABLE 6-3. FUEL SYSTEM FIRE HAZARD LEVEL—UNMODIFIED ORIGINAL

Item	Description	% FCS[1]	% LSCF[2]	Points FSOF[3]	Points EET[4]	Hazard Units[5].	Fire Hazard Level[6]	% Hazard Reduction[7]
	Main Fuel System							
1	Bladder – Wall	75	75	8	10	10.1	20.4	N/A
2	Bladder – Filler	75	60	8	10	8.1	16.4	N/A
3	Bladder – Access	25	50	5	9	1.8	3.7	N/A
4	Bladder – Outlets	50	50	6	8	3.5	7.2	N/A
5	Crossover line	75	50	9	10	7.1	14.3	N/A
6	Fuel lines	50	90	8	7	6.8	13.7	N/A
7	Vent lines	25	40	6	7	1.3	2.6	N/A
8	Drain valves	50	30	6	5	1.6	3.2	N/A
9	Fuel pump	50	40	6	8	2.8	5.7	N/A
10	Fuel cap	25	75	8	10	3.4	6.9	N/A
11	Fuel filter	25	75	8	6	2.6	5.3	N/A
12	Quantity probe (N/A)							
13	Fuel shutoff valve	10	25	5	6	0.3	0.6	N/A
					Totals	49.4	100.0	

NOTE:

1. FCS = Likelihood of a component to fail and cause spillage
2. LSCF = Likelihood of spillage catching fire
3. FSOF = Likelihood of fire starting other fires
4. EET = Numeric code representing estimated escape time for occupants
5. Hazard Units = (FCS/100 x LSCF/100) x (FSOF + EET)
6. Fire Hazard Level =

$$\frac{\text{Hazard Units (by item)}}{\text{Hazard Units (total unmodified)}} \times 100$$

7. Percent Fire Hazard Reduction =

$$\frac{\text{Basic Hazard Level} - \text{Modified Hazard Level}}{\text{Basic Hazard Level}} \times 100$$

- Failure of a Component Which Causes Spillage

When rating the fuel system components and/or hazardous areas for the likelihood of fuel spillage during the serious, marginally survivable crash, the following items should be included in the evaluation:

1. Vulnerability of the component and/or area during impact.

    a Location
    b Specific component or area design

2. Probability that a destructive impact will occur. Each designated component/area rated in each specific system configuration. The rating is given in the form of percentage of probable spillage occurrence. Example: If the designated component/area will cause spillage during every serious crash, it is given a 100% rating, whereas if it will cause spillage in only one out of every four accidents, it is given a rating of 25%.

- Likelihood of Spillage Catching Fire

When rating the fuel system components and/or hazardous areas for the likelihood of fuel spillage catching fire, the following items should be included in the evaluation.

1. Availability of ignition sources.

    a. Type
    b. Available energy and duration
    c. Location

2. Size of fuel spill
3. Probable spillage paths

Spillage occurring at each designated component/area is rated in each specific system configuration. The rating is given the form of percentages of probable ignition.

Example: If the spillage will catch fire every time during the serious crash environment, it is given a 100% rating. If it will ignite in only one out of every four accidents, it is given a rating of 25%.

- Fire Starting Other Fires

When rating the fuel system components and/or hazardous areas for the likelihood of an existing fire serving as an ignition source for other spillages, the following items should be included in the evaluation:

1. Location of fire
2. Size of fire

3. Location of other ignitable material
4. Possible spillage paths
5. Possible flame spread paths

Each fire is rated in each specific system configuration. The rating is given in the form of points. If an existing fire is 90% to 100% likely to ignite surrounding spillages, a rating of 10 is given. If the likelihood of an ignition chain reaction is 80% to 90%, a rating of 9 is given. The point rating decreases at the rate of 1 point per each 10% decrease in likelihood of occurrence, as shown below.

Likelihood of Chain Rating Points	Reaction Occurrence
10	90% - 100%
9	80% - 90%
8	70% - 80%
7	60% - 70%
6	50% - 60%
5	40% - 50%
4	30% - 40%
3	20% - 30%
2	10% - 20%
1	0% - 10%

- Estimated Escape Time

When rating the fuel system components and/or hazardous areas for the probable escape time available to occupants if a fire occurs, the following items should be included in the evaluation:

1. Location of initial fire relative to the occupants.
2. Growth potential of the fire.

    a. Initial spillage quantity
    b. Sustained spillage quantity

3. Egress considerations

    a. Location of occupants relative to the escape routes

    b. Complexity of the escape (doors, hatches, handles, cargo, and other potentially delaying problems)

Each fire is rated in each specific system configuration. The rating is given in the form of points. If the escape time is estimated to be less than 20 seconds, the fire is given a rating of 10. If the escape time is more than 20 seconds, but less than 40 seconds, the fire is

rated 9. The point rating decreases at the rate of one point for each 20 second increase in escape time as shown below.

Rating Points	Available Escape Time
10	0 - 20 Seconds
9	20 - 40 Seconds
8	40 - 60 Seconds
7	60 - 80 Seconds
6	80 - 100 Seconds
5	100 - 120 Seconds
4	120 - 140 Seconds
3	140 - 160 Seconds
2	160 - 180 Seconds
1	180 -

For a discussion of why 180 seconds is chosen as the maximum time duration, see Escape Time Discussion, section 6.2.1.3.

- Hazard Units

"Hazard Units" are arbitrary numbers derived by the following formula.

$$(FCS/100 \times LSCF/100) \times (FSOF + EET)$$

FCS = Rating in percent for each component/area when evaluated for the likelihood of the component "failing and causing spillage."

LSCF = Rating in percent for each component/area when evaluated for the "likelihood of the spillage catching fire."

FSOF = Rating in points for each fire when evaluated for the likelihood of "fire starting other fires."

EET = Rating in points for each fire when evaluated for "estimated escape time" for occupants.

- Fire Hazard Level

The fire hazard level is 100% for the complete, original fuel system design. For a specific component and/or designated area it is derived by the following formula.

$$FHL = \frac{\text{Component and/or area "Hazard Units"}}{\text{Total System "Hazard Units}} \times 100$$

6.2.1.3 Escape Time Discussion.

The length of time required for evacuation from a crashed aircraft can differ for a variety of reasons. Examples include ratio of occupants to usable exits, ease of exit operation, interference

problems with things such as cargo, fire, the degree of occupant injury, and the availability of rescue personnel.

Studies by these authors and others of aircraft crash fire growth rates and of evacuation times used by survivors in over 4,500 air crashes have shown that most evacuations fall into one of two categories. Either the occupants are out of the aircraft within a few seconds to a minute or so or they are in the aircraft for a much longer period of time—in some cases hours or days.

The growth rates of typical postcrash fires are such that they usually start out small, grow in intensity for several minutes, then start to subside. One's ability to survive these fires is usually predicated on the clothing one is wearing, the air one is breathing, the temperature to which one is being exposed, and the duration of one's exposure.

A summary of actual crash data, as well as experimental crash test data, indicates that 3 minutes is about as long as one can expect to survive in a major crash fire. In fact, the survival time will be much less in many crashes, due primarily to the close proximity of the fuel to the occupants. The FAA currently requires that an aircraft be capable of evacuation within 90 seconds.

For further study of the subject, the reader is referred to the scientific literature, much of which is summarized in Volume 5 of the U.S. Army "Aircraft Crash Survival Design Guide," USAAVSCOM TR 89-D-22E [44], coauthored by the researchers who performed this study. It is the basic handbook in the field and is available from the U.S. National Technical Information Service.

6.2.2 Example Fuel System Fire Hazard Level Evaluation.

The fuel system used as an example is shown in figure 6-1.

6.2.2.1 Fuel System Fire Hazard Level—Original System.

The Original Fuel System Hazard Level is shown in table 6-3. The fuel system items were evaluated in accordance with the procedures described under section 6.2.1. The table shows that the original fuel system has a total fire hazard level of 100%, and that the 100% level was derived from a hazard unit level of 49.4.

Study of the individual fire hazard level percentage clearly shows that the helicopter fuel bladders and the fuel lines are the principal contributors to the fire problem, whereas the other items, even though they too contribute, are a lesser threat.

6.2.2.2 Fuel System Fire Hazard Level—Modified System.

Once the evaluation process yields the fire hazard level for the original fuel system, design change options are theorized, which, if implemented, will reduce the overall fire threat.

The options derived for the example fuel system are as follows:

- Option A. This option leaves the original fuel system as is, with two exceptions: upgrading the fuel feed line in the engine compartment and making the crossover line more crashworthy. This option would install a self-sealing breakaway valve (SSBV) where the tank-to-engine fuel pump line passes through the firewall, and it would beef up each end fitting of the hose and the engine fuel pump fitting to assure that the valve would separate, rather than the hose end or the pump fitting failing. The crossover tube would be replaced with a tough, flexible steel-braided hose and the hose-fuel bladder attachments strengthened.

- Option B. This option utilizes the original fuel system with option A incorporated. In addition, the current helicopter fuel bladders would be replaced by more crash-resistant bladders incorporating high-strength fittings at all tank outlets.

The next step in the evaluation process subjects the fuel system items and their respective rated qualities, shown in table 6-3, to an iteration process whereby each item is re-evaluated assuming that the subject option had been performed.

The fire hazard levels for the unmodified original system and for optional systems A and B show that option A (table 6-4) reduces the fire hazard level by 19 percent while option B (table 6-5) reduces the fire hazard level by 54 percent.

TABLE 6-4. FUEL SYSTEM FIRE HAZARD LEVEL—MODIFIED/OPTION A

Item	Description	% FCS[1]	% LSCF[2]	Points FSOF[3]	Points EET[4]	Hazard Units[5]	Fire Hazard Level[6]	% Hazard Reduction[7]
Main Fuel System								
1	Bladder – Wall	75	75	8	10	10.1	20.4	0.0
2	Bladder – Filler	75	60	8	10	8.1	16.4	0.0
3	Bladder – Access	25	50	5	9	1.8	3.7	0.0
4	Bladder – Outlets	40	50	6	8	2.8	5.7	20.8
5	Crossover line	25	50	9	10	2.4	4.9	65.7
6	Fuel lines	20	90	8	7	2.7	5.5	59.9
7	Vent lines	25	40	6	7	1.3	2.6	0.0
8	Drain valves	50	30	6	5	1.6	3.2	0.0
9	Fuel pump	50	40	6	8	2.8	5.7	0.0
10	Fuel cap	25	75	8	10	3.4	6.9	0.0
11	Fuel filter	25	75	8	5	2.6	5.3	0.0
12	Quantity probe (N/A)							
13	Fuel Shutoff valve	10	25	5	6	0.3	0.6	0.0
					Totals	39.9	80.9	19.1

NOTE:

1. FCS = Likelihood of a component to fail and cause spillage
2. LSCF = Likelihood of spillage catching fire
3. FSOF = Likelihood of fire starting other fires
4. EET = Numeric code representing estimated escape time for occupants
5. Hazard Units = (FCS/100 x LSCF/100) x (FSOF + EET)
6. Fire Hazard Level =

$$\frac{\text{Hazard Units (by item)}}{\text{Hazard Units (total unmodified)}} \times 100$$

7. Percent Fire Hazard Reduction =

$$\frac{\text{Basic Hazard Level} - \text{Modified Hazard Level}}{\text{Basic Hazard Level}} \times 100$$

TABLE 6-5. FUEL SYSTEM FIRE HAZARD LEVEL—MODIFIED/OPTION B

Item	Description	% FCS[1]	% LSCF[2]	Points FSOF[3]	Points EET[4]	Hazard Units[5]	Fire Hazard Level[6]	% Hazard Reduction[7]
Main Fuel System								
1	Bladder – Wall	30	60	7	10	3.1	6.3	69.7
2	Bladder – Filler	30	50	7	10	2.6	5.3	68.6
3	Bladder – Access	15	40	4	9	0.8	1.6	53.3
4	Bladder – Outlets	20	40	5	8	1.0	2.0	62.3
5	Crossover line	20	40	7	9	1.3	2.6	56.4
6	Fuel lines	20	90	8	7	2.7	5.5	81.4
7	Vent lines	25	35	6	7	1.1	2.2	11.3
8	Drain valves	50	20	6	5	1.1	2.2	34.5
9	Fuel pump	45	40	6	8	2.5	5.1	10.5
10	Fuel cap	25	75	8	10	3.4	6.9	5.2
11	Fuel filter	25	75	8	5	2.6	5.3	44.4
12	Quantity probe (N/A)							
13	Fuel shutoff valve	10	25	5	6	0.3	0.6	16.7
					Totals	22.5	45.6	54.4

NOTE:

1. FCS = Likelihood of a component to fail and cause spillage
2. LSCF = Likelihood of spillage catching fire
3. FSOF = Likelihood of fire starting other fires
4. EET = Numeric code representing estimated escape time for occupants
5. Hazard Units = (FCS/100 x LSCF/100) x (FSOF + EET)
6. Fire Hazard Level =

$$\frac{\text{Hazard Units (by item)}}{\text{Hazard Units (total unmodified)}} \times 100$$

7. Percent Fire Hazard Reduction =

$$\frac{\text{Basic Hazard Level} - \text{Modified Hazard Level}}{\text{Basic Hazard Level}} \times 100$$

7. AC 29-2B DISCUSSION.

7.1 BACKGROUND.

In October 1994, 14 CFR Parts 27 and 29 of the Code of Federal Regulations, were amended by adding, among others, 14 CFR 29.952, which for the first time established a set of requirements that defined the civil CRFS for rotorcraft. While the requirements were contained in 14 CFR 29.952, no compliance guidelines were provided until July 30, 1997 when AC 29-2B was issued.

Section 7.2 of this report comments on the adequacy and content of AC 29-2B in providing the aircraft fuel system designer with appropriate information to permit the designer to satisfy the CRFS criteria established in 14 CFR 29.952. Section 7.3 of this report comments on the acceptance test levels that will most likely increase if the severity levels of the civil upper-limit survivable crash are increased to levels commensurate with the current state of the art for CRFS knowledge and technology.

NOTE: While it is apparent that the FAA expended considerable resources in preparing AC 29-2B, it is equally apparent that the FAA and NTSB have expended few resources in determining whether the new civil CRFS are performing as anticipated. Virtually no data is available from FAA and NTSB crash investigations to determine the performance of the new CRFS in preventing or controlling postcrash fires. The data used in preparing section 7 of this report is based only upon the observations and opinions of the authors and upon anecdotal information based on informal discussions with FAA and NTSB crash investigators and with engineers of civil helicopter manufacturers. If CRFS performance is to be enhanced, it is absolutely essential that the FAA and the NTSB place a higher priority on collecting data relative to CRFS performance.

Comments on certain paragraphs of AC 29-2B, and a reason for each proposed change, are set forth in section 7.2.

7.2 AC 29-2B, 29.952, GENERAL COMMENTS.

Paragraph 447, §29.952, a.(1), line 1: Delete the phrase "safety standards" and replace it with the phrase "design standards."

Reason: The phrase "design standards" is more accurate.

Paragraph 447, §29.952, a.(1)(ii), line 3: Delete the phrase "occupant safety" and replace it with the phrase "occupant protection."

Reason: The word "protection" is more specific and more accurate.

Paragraph 447, §29.952, a.(4), line 6: Delete the numbers "0.03" and "0.018" and replace them with the numbers "0.08" and "0.18."

Reason: The thickness measurements are incorrect and should be corrected. These errors may have been typographical.

Paragraph 447, §29.952, b.(1), line 2: Add the following at the end of the line: "(Cancelled, but in the process of being reissued.)"

Reason: The Army has informally acknowledged that MIL-T-27422B should not have been cancelled. The SAE, Army and Navy, in conjunction with technical personnel from the aircraft manufacturers, bladder manufacturers, fuel system manufacturers and researchers are developing a new version of this Specification for likely release in 2001.

Paragraph 447, §29.952, b.(2), line 1: Delete the phrase "MIL-STD-1290(AV), Jan 25, 1974" and replace it with: "MIL-STD-1290A (AV) dated Sept 26, 1988. (Cancelled, without replacement.)"

Reason: MIL-STD-1290A (AV) is the most current version of the specification and it was cancelled in the mid-1990s. ADS 11b and ADS 36 remain in effect and contain most of the same data. It appears likely that this specification will be reissued in the near future.

Paragraph 447, §29.952, b.(4), line 2: Add at the end of the line: "(Cancelled, superseded by SAE ARP 1616A dtd Apr. 5, 1991.)"

Reason: The cited specification is no longer in effect.

Paragraph 447, §29.952, b.(7): Delete the sentence and replace with: "U.S. Army Publication USA AVSCOM TR 89-D-22E, 'Aircraft Crash Survival Design Guide, Volume D, Aircraft Postcrash Survival,' dated Dec 1989."

Reason: The deleted report reference is for the early draft version of the report. The current document identification is offered to replace the earlier version.

Paragraph 447, §29.952, b. End Note: Delete the Note and replace it with: "Note: section 4, "Postcrash Fire Protection" of Volume V of the Design Guide is the most recent update to MIL-STD-1290A (AV). Section 4 contains a comprehensive design guide for military CRFS designs that will be useful for civil CRFS designs. In addition, some of the referenced Military Specifications listed above have been superceded and some have been canceled and not reissued, but they remain valuable and useful guides for the designer."

Reason: The military is in the process of changing many of its Military Specifications to Performance Standards. Unfortunately, it cancelled many of its Specifications before the corresponding Performance Specifications could be written. The ASME and the SAE have undertaken the task of rewriting many of the cancelled Specifications, but it will be years before the task is completed. The

cancelled MIL SPECS contain much of the data needed by CRFS designers to design their systems. The MIL SPECS remain a valuable tool.

Paragraph 447, §29.952, c.(1), lines 8 and 9: Delete the phrase "In lieu of a more rational, approved criteria . . ." and replace it with the phrase: "Until approved criteria are established... "

Reason: In the future, a better definition of human survivability limits will be developed based on accident data and/or tests. It is essential to remember that human tolerance depends on the time duration of G loads and not on G loads alone.

Paragraph 447, §29.952, c.(6), line 2: Delete the phrase "nonhazardously to an external drain" and replace it with the phrase: "safely away from the aircraft."

Reason: The phrase adds clarification.

Paragraph 447, §29.952, c.(10), line 2: After "line-to-tank connection," insert "or fuel vent line."

Reason: Dangerous fuel spillage often occurs through open fuel vent lines.

Paragraph 447, §29.952, c.(10), line 4: Delete the words "Each half self-seals . . ." and replace them with the words: "One half or both halves self-seal(s). . ."

Reason: Many self-sealing breakaway valves only seal one end, such as a vent line that exits a tank. It is essential that the tank half seals to prevent fuel spillage, but there is no need to seal the other half unless other vent lines could drain fuel into it.

Paragraph 447, §29.952, c.(10), line 9: Delete the phrase "usually less than" and replace it with the phrase: "not more than."

Reason: The goal is to allow as small an amount of fuel spillage as possible (and practical). Engine compartment valves should require even less spillage.

Paragraph 447, §29.952, d.(1), line 20. Delete the phrase "should be covered" and replace it with the phrase: "may be covered by the applicant."

Reason: See comment to lines 22-24 below.

Paragraph 447, §29.952, d.(1), line 21. Delete the phrase "should be tinted" and replace it with the phrase: "may be tinted by the applicant."

Reason: See comment to lines 22-24 below.

Paragraph 447, §29.952, d.(1), lines 22-24. Delete the following sentence: "The tank (except for the vent openings) should be wrapped in light plastic sheet to ensure that minor leakage or seepage (and its source) is detected."

> Reason: Based upon the observation of hundreds of fuel bladder and fuel cell drop tests during the development of the military CRFS, any covering of the tank or the airframe structure (actual or simulated) hampers photographic or video coverage during the actual impact and during the subsequent post drop examination. Furthermore, covering the tank or dying the fluid is not typically needed. Leakage can be readily detected, even if the rate is only a few drops per minute.

Paragraph 447, §29.952, d.(1), lines 25. Add the following words at the start of the sentence: "If the tank water is tinted, . . ."

> Reason: Dying the water for tank testing is normally not necessary, but if the applicant decides to do so, the dye must not influence potential leakage.

Paragraph 447, §29.952, d.(1), lines 34. Add the word "airframe" before the word "puncture."

> Reason: Only airframe puncture risks are relevant. Possible puncture from other sources such as the drop tower and the test apparatus are not relevant.

Paragraph 447, §29.952, d.(1)(iii), line 5: Add after the word "cover" the phrase: ", if used," and delete the phrase "or tank wrapping sheet."

> Reason: Brown paper and plastic sheets should not be required and the tank should not be wrapped.

Paragraph 447, §29.952, d.(2); (3)(ii); and (12): In each of these paragraphs, delete the notation "1×10^{-9}" and replace it with "1×10^{-5}."

> Reason: The number 1×10^{-9} is excessively small. At best, only a paper analysis can be used to show a one in a billion probability of occurrence. It is the equivalent of 1000 helicopters flying 1000 hours per year for 1000 years with no more than one failure. There are no known tests or experiences that can lead to this probability, and therefore, the results are unverifiable. A more realistic number is 1×10^{-5}. (See, for example, §29-952d,(10)).

Paragraph 447, §29-952, d.(5), line 2: Delete the phrase "to separate" and replace it with the phrase: "to fracture and separate."

> Reason: See next comment below.

Paragraph 447, §29-952, d.(6), lines 1 and 2: Delete the phrase "to separate" and replace it with the phrase: "to fracture and separate."

Reason: These paragraphs should be interpreted to apply only to couplings that breakaway (separate) by fracturing valve components. Because the valves must not be "fragile," the minimum fracture value, when applied during the crash sequence should not be less than 300 lbs. This is a realistic value that has been demonstrated during the past 30 years of military CRFS experience. However, when quick disconnect valves are installed as breakaway valves, they are installed in such a manner that movement caused by the crash pulls a device (e.g., the hose or a cable lanyard) that uncouples the valve halves, allowing an easy, clean separation. Since the force required to uncouple quick disconnect valves can be as low as 5 lbs, they should only be installed in areas where activities surrounding the normal flight and service environment can not cause them to be inadvertently separated.

Paragraph 447, §29.952, d.(9): Delete the third sentence, and replace it with the following: "This should be no more than 8 ounces of fuel per coupling, except for couplings used in the engine compartment that should release no more than 4 ounces of fuel per coupling."

Reason: 8 ounces of fuel spilled in an engine compartment where the fuel could spread or spray over the hot components, and where there could be significant electrical sparking if wires are cut or torn, is likely to start a hazardous fire.

Paragraph 447, §29.952, d.(11)(i), line 3: Add "(superseded by SAE AS 604 and AS 1339)" after the cite "MIL-H-38360.

Reason: MIL-H-38360 has been superseded by the newer SAE documents.

Paragraph 447, §29.952, d.(11)(ii), lines 1 and 2: Delete the phrase "Hoses should neither pull out of their fittings nor should the end fittings break" and replace it with: "Hoses should not pull out of their end fittings and the end fittings should not break. . . ."

Reason: The change adds clarity.

Paragraph 447, §29.952, d.(12), line 6: See comments above under §29.952,d.(2) and (3).

Paragraph 447, §29.952, d.(18)(i), lines 3-8: Delete the third and fourth sentences and replace them with: "Flexible liners can resist only pure tension loads acting as a membrane (i.e., it has negligible bending strength). The rigid shell structure required by §29.967(a)(3) that surrounds the flexible liner (membrane) carries the crash-induced impact and tear loads; however, the liner can be subjected to penetration and/or cutting by sharp surfaces if the shell structure is similarly damaged.

Reason: The flexible liner should be cut-and-tear resistant to the same level as the other components surrounding the fuel tank.

Paragraph 447, §29.952, d.(18)(iv)(A), (B) and (C): Comment – These values are considerably less than those required by the military fuel system specifications. Future civil helicopter crash

testing and field crash investigation data must be gathered to determine if these FAA requirements are adequate for civil helicopter crash-resistant fuel systems.

7.3 AC 29-2B, 29.952, INCREASING THE CRFS CAPABILITY.

This section of the report provides comments on the acceptance test levels that will most likely be increased if the severity levels of the civil upper-limit survivable crash are increased to a level commensurate with the current state of the art for CRFS knowledge and technology.

Paragraph 447, §29.952, a.(iv).

> Comment: The height for the tank drop test should be increased. The military uses 65 feet, which has helped produce a very effective CRFS. It is hoped that when the existing 50 ft. drop height is increased, it will be raised as a result of a comprehensive test program.

Paragraph 447, §29.952, a.(4).

> Comment: The CRFS bladder wall thickness now in use will likely be increased slightly; however, future research programs could yield new materials that are lighter and thinner than those now available.

Paragraph 447, §29.952, c.(11).

> Comment: When the severity level of the survivable civil helicopter crash is increased, the tank puncture resistance will, by necessity, also be increased. It will likely be increased either in TSO-C80, or by the proven standards described in MIL-T-27422B, which measure it differently. If the MIL-T-27422B standards are selected, their existing levels may be used, or they may be modified as a result of a research effort.

Paragraph 447, §29.952, d.(1).

> Comment: The increase in crash severity will likely dictate that, for drop test purposes, the tank will be filled to a greater water level than the 80% now in use. The safety margin gained by the increase will be needed because civil helicopters will be crashing at greater velocities and at flight attitudes that have never been tested, even during the current FAR 29.952 certification process. Investigation of these upper level, serious but survivable, accidents will likely show that when the bladders are called upon to bridge gaps in displacing structure, especially when the gap edges are sharp, the bladders will tear, their seams will open and their fittings will pull out. Each of these failures can release large quantities of fuel and contribute significantly to the postcrash fire.

Paragraph 447, §29.952, d.(1)(ii).

Comment: As CRFSs are designed and built to comply with the current FAR 29.952, consideration must be given to controlling the dangerous fuel spillage from tank vents. The technical knowledge exists today to prevent vent spillage; it is only a matter of implementation into civil helicopter design.

Paragraph 447, §29.952, d.(2)(i).

Comment: As the knowledge that was developed during the military CRFS research programs is adopted in the civil sector, one of the areas that will likely be changed relates to restraint issues for auxiliary fuel cells located in the cabin. Load limiting restraint systems will be employed to safely restrain the tanks during a defined crash deceleration scenario of G forces versus time. This can be done safely and at low weight using current technology.

Paragraph 447, §29.952, d.(2)(iv)(v).

Comment: Same as Para 447, §29.952,a.(iv).

Paragraph 447, §29.952, d.(18)(iv)(A),(B) and (C).

Comment: The existing AC 29-2B paragraphs discuss the MIL-T-27422B, "Military Specification: Tank, Fuel, Crash-Resistant Aircraft" portions relating to a series of six separate tests: the constant rate tear, the impact penetration, the impact tear, the panel strength calibrations and the fitting strength. These six tests are the key standards used to evaluate the crashworthiness of the military fuel cell.

The authors of AC 29-2B chose to adopt three of the tests: the constant rate tear, the impact penetration and the impact tear; however, the values were lowered from the corresponding military CRFS values. The constant rate tear test was lowered form 400 ft/lbs to 200 ft/lbs, the impact penetration dart drop height was lowered from 15 feet to 8 feet, and the impact tear test drop height was lowered from 10 feet to 8 feet with the resulting tear length being increased from 0.5 inches to 1.0 inches.

As the fuel cell is called upon to function safely in accidents of increasing severity, these three test levels will likely be increased. Also, the other three tests that are currently omitted from FAR certification requirements may be reconsidered for inclusion because these tests are known to work and all of the major fuel cell manufacturers incorporate them in their fully developed products that satisfy all MIL-T-27422B requirements.

Paragraph 447, §29.952, d.(18) Note.

Comment: Same as Para 447, §29.952,c.(11).

8. CONCLUSIONS.

The following are conclusions reached as of a result of this study of helicopter Crash-Resistant Fuel Systems (CRFS).

1. Crash-resistant fuel systems developed and utilized by the U.S. Army are highly effective in preventing helicopter postcrash fuel fires that cause thermal fatalities and injuries.

2. The research conducted to date indicates that the crash severity level of the upper-limit survivable accident for civil helicopters is considerably lower than the corresponding level of the upper-limit survivable accident for military helicopters.

3. Increasing the civil helicopter severity level of the upper-limit survivable accident is not caused by the lack of knowledge regarding CRFS technology or the availability of CRFS hardware, but rather it appears to be more related to economic considerations.

4. As of this date, the civil helicopter crash severity level of the upper-limit survivable accident is, at best, only an estimation because of the almost complete lack of crashworthiness data recorded at the accident scene.

5. The percentage of all civil helicopter crashes that are survivable or partially survivable, when measured in terms of (i) G forces versus time and (ii) livable space, is unknown. This value, when calculated and considered in conjunction with the frequency of occurrence, will provide a baseline for engineers to use when designing to reduce the postcrash fire threat.

6. Advisory Circular 29-2B, issued in July 1997, contains the new, well reasoned Fuel System Crash Resistance Subsection 29-952. Based on the limited accident data available since issuance, it appears that it is assisting the aircraft designer in reducing the postcrash fire hazard.

7. The integration of CRFS technology into the civil helicopter fleet can be accomplished more efficiently and at a lower cost and at reduced weight when more is known about civil helicopter airframe behavior during the more severe accidents. Knowledge about the more severe accidents can be assembled more quickly and evaluated more easily through the use of ratings systems, such as the ones discussed in this report.

9. RECOMMENDATIONS.

The recommendations, based on this study, outline the research efforts which should be undertaken by the FAA and NASA to support the development of improved crash-resistant fuel systems for civil helicopters.

The knowledge surrounding upper level severity accidents, and the behavior of civil helicopter structures in those accidents, is not well known or understood. This lack of knowledge hampers the engineering effort to design and integrate optimal CRFS technology into new helicopter designs. This knowledge can be obtained by accomplishing the following recommendations:

1. Elevate the FAA and the NTSB accident investigators' level of expertise in the area of crash survivability, with special emphasis related to crash kinematics and the behavior of the fuel, oil and electrical systems.

2. Using investigators skilled in the field of crash survivability, develop crash kinematic data for each accident to include impact velocities and stopping distances related to the vertical, longitudinal, and lateral directions, determine and note the behavior of the fuel system overall, its specific individual components, and the airframe structure surrounding the fuel system; and further develop and implement a method of compiling and storing this data for easy retrieval.

3. Conduct a limited number of crash tests using helicopters built to the new FAA CRFS requirements to assess CRFS effectiveness.

4. As knowledge is gained under Task 2 and 3, determine the percentage of nonsurvivable and partially survivable accidents*, as a function of all civil helicopter accidents. This information will identify those areas where enhancements to future CRFS technology will save additional lives.

5. As knowledge is gained under Tasks 2, 3, and 4, select a desired survivability level as a goal and fund the research and test efforts that are necessary to attain that goal. The efforts should include:

   A. Crash testing of helicopter hulls;

   B. Crash testing of CRFS components;

   C. Crash testing of helicopters containing various CRFS designs;

---

* A nonsurvivable accident is defined as an accident having a G force versus time history applied to occupants that is above their human survival range, or one that fails to provide livable space for the occupants throughout the entire crash sequence. A partially survivable accident is an accident wherein some occupiable areas are survivable and other occupiable areas are not.

D. Developing programs to optimize the performance and physical characteristics of various CRFS components, including:

(i) lighter and more crashworthy bladders;

(ii) lighter fuel lines and end fittings;

(iii) self-sealing breakaway valves, with an emphasis on valve standardization and simplification; and

(iv) frangible fastening schemes to include bolts, clips, clamps, and other structural techniques.

E. Developing programs to improve the airframe structural crashworthiness in and around the various fuel system components and line routings.

6. While Tasks 1-5 are being performed, start a concurrent effort to develop a method for predicting the probable success of a proposed design. Relative risk* levels should be used in tradeoff studies, similar to those employed in System Safety analysis procedures (MIL-STD-882D) in which the probability of occurrence is estimated on a fleet level and the degree of hazard is estimated for the specific event. Costs (weight penalty, dollars, etc.) should be weighed against risk levels during these tradeoff studies. Evidence should be provided that the incorporation of a crashworthiness feature in each specific situation will decrease the risk, at an acceptable cost. The specific risk acceptance levels established by the regulatory agencies will then become a part of the certification decision process.

7. Adopt the revision suggested by the work effort embodied in this report for inclusion in future editions of AC 29-2

* Risk = Probability of occurrence multiplied by the severity of the specific hazard.

10. REFERENCES.

1. Cleveland Laboratory Aircraft Fire Research Panel, "Preliminary Survey of the Aircraft Fire Problem," NACA Research Memorandum No. E8B18, Flight Propulsion Laboratory, Cleveland, Ohio, May 1948.

2. "United States Army Aviation Crash Injury Research," TREC Technical Report 62-13, Aviation Crash Injury Research, Phoenix, Arizona, September 1961.

3. Spencer, Lloyd E., "Breakaway Fuel Cell Concept," TREC Technical Report 62-37, Aviation Crash Injury Research, Phoenix, Arizona, May 1962.

4. Pinkel, I. Irving, G. Merritt Preston, and Gerard J. Pesman, "Mechanism of Start and Development of Aircraft Crash Fires," NACA Report 1133, Lewis Flight Propulsion Laboratory, Cleveland, Ohio, 1953.

5. Field, R.L., Melvin F. Miller, and George L. Pigman, "An Investigation of the Crash Fire Problems in Transport Aircraft Fuel Tanks," CAA Technical Development Report No. 134, Technical Development and Evaluation Center, Indianapolis, Indiana, January 1951.

6. Bennett, Charles V. and Robert R. Rodgers, Jr., "Development of Crash-Resistant Aircraft Flammable Fluid Systems, Part I, Delineation of the Problem," Technical Development Report No. 397, FAA Technical Development Center, Indianapolis, Indiana, March 1959.

7. Turnbow, J.W., "A Dynamic Crash Test of an H-25 Helicopter", SAE Paper 517A,Society of Automotive Engineers, New York, New York, April 1962.

8. Haley, J.L., Jr., S.H. Robertson, and J.W. Turnbow, "Crash Survival Evaluation OH-4A Helicopter," Memorandum Report No. M-65-9, Aviation Safety Engineering and Research, Phoenix, Arizona, June 1965.

9. "Crash Survival Evaluation OH-5A Helicopter," AvSER Memorandum Report M66-11, Aviation Safety Engineering and Research, Phoenix, Arizona, April 1966.

10. Pesman, Gerard J., "Appraisal of Hazards to Human Survival in Airplane Crash Fires," NACA Technical Note 2996, Lewis Flight Propulsion Laboratory, Cleveland, Ohio, September 1953.

11. Johnson, Neva B., Donald E. Goebel, and S. Harry Robertson, "An Appraisal of the Postcrash Fire Environment," Technical Report 70-22-CE, U.S. Army Natick Laboratories, Natick, Massachusetts, September 1969.

12. Bennett, Charles V. and Robert J. Schroers, "Impact Tests of Flexible Nonmetallic Aircraft Fuel Tanks Installed in Two Categories of Simulated Wing Structures," CAA Technical Development Report No. 291, Technical Development Center, Indianapolis, Indiana, January 1957.

13. Hillman, D.A. and R.J. Schroers, "Calculation of the Strength of Crash-Resistant Fuel Cells for the Wings of a Twin-Engine and a Four-Engine Transport Airplane," Final Report Task No. 59-203.4, National Aviation Facilities Experimental Center, Atlantic City, New Jersey, April 1961.

14. Clark, John H., "Development of Crash-Resistant Aircraft Flammable Fluid Systems, Part IIA, Specifications for Prototype Fittings for Bladder-Type Fuel Tanks," Interim Report Task No. 59-203.8, FAA Test and Experimentation Division, Atlantic City, New Jersey, May 1960.

15. Sommers, John, Jr. and John H. Clark, "The Development of Aircraft Crash-Resistant Fuel Cells, Safety Valves, and Breakaway Accessories," SAE Paper 517D, Society of Automotive Engineers, New York, New York, April 1962.

16. Robertson, S. Harry and James W. Turnbow, "Aircraft Fuel Tank Design Criteria," USAAVLABS Technical Report 66-24, U.S. Army Aviation Materiel Laboratories, Fort Eustis, Virginia, March 1966.

17. Robertson, S. Harry and Victor E. Rothe, "Experimental Crash-Resistant Fuel Tank Program," AvSER Report No. 65-23, Aviation Safety Engineering and Research, Phoenix, Arizona, December 1965.

18. McDonald, W.C., "New Energy-Absorbing Materials for Crash-Resistant Fuel Tanks", SAE Paper 680210, Society of Automotive Engineers, New York, New York, April 1968.

19. Johnson, N.B., J.H. Rogers, and R.L. Cook, "Aircraft Fuel Systems Design Study," USAAVLABS Technical Report 67-33, U.S. Army Aviation Materiel Laboratories, Fort Eustis, Virginia, 1967.

20. Robertson, S. Harry, "Development of a Crash-Resistant Flammable Fluids System for the UH-1A Helicopter," USAAVLABS Technical Report 68-82, U.S. Army Aviation Materiel Laboratories, Fort Eustis, Virginia, January 1969.

21. Turnbow, J.W., et al, "Crash Survival Design Guide," USAAVLABS Technical Report 67-22, U.S. Army Aviation Materiel Laboratories, Fort Eustis, Virginia, July 1967.

22. Turnbow, J.W., D.F. Carroll, J.L. Haley, Jr. and S.H. Robertson, "Crash Survival Design Guide," USAAVLABS Technical Report 70-22, U.S. Army Aviation Materiel Laboratories, Fort Eustis, Virginia, August 1969.

23. Military Specification MIL-T-27422B, "Tank, Fuel, Crash-Resistant, Aircraft," Department of Defense, Washington, D. C., February 1970.

24. "Crash Survival Design Guide," USAAMRDL Technical Report 71-22, U.S. Army Air Mobility Research and Development Laboratory, Fort Eustis, Virginia, October 1971.

25. Military Standard MIL-STD-1290A (AV), "Light Fixed- and Rotary-Wing Aircraft Crashworthiness," Department of Defense, Washington, D.C., September 1988.

26. Robertson, S. Harry, "The UH-1D/H Crash-Resistant Fuel System Development Program," Dynamic Science, Phoenix, Arizona, December 1969.

27. Cook, Richard L. and Donald E. Goebel, "Evaluation of the UH-1D/H Helicopter Crashworthy Fuel System in a Crash Environment," USAAMRDL Technical Report 71-47, U.S. Army Air Mobility Research and Development Laboratory, Fort Eustis, Virginia, November 1971.

28. Gabella, William F. and Wade L. Young, "Summary of U.S. Army Crashworthy Fuel Systems Accident Experience, 1970-1973", *System Safety Newsletter*, Vol. 2, No. 3, U.S. Army Agency for Aviation Safety, Fort Rucker, Alabama, 1973.

29. Knapp, Stanley C., Pierre Allemond, and David H. Karney, "Helicopter Crashworthy Fuel Systems and Their Effectiveness in Preventing Thermal Injury", *AGARD Conference Proceedings No. 225*, Technical Editing and Reproduction Ltd., Harford House, London, England, December 1978.

30. Robertson, S. Harry and Ted J. Adamczyk, "Crashworthy Fuel Systems", *Aircraft Crashworthiness*, University Press of Virginia, Charlottesville Virginia, 1975.

31. Garrison, James R. and Herman H. Waldrup, "The Bell Model 222", SAE Paper 770951, Society of Automotive Engineers, Warrendale, Pennsylvania, November 1977.

32. Fox, Roy G., "Realistic Civil Helicopter Crash Safety," *Crashworthy Design of Rotorcraft*, Georgia Institute of Technology, Atlanta, Georgia, April 1986.

33. Coltman, Joseph W., "Rotorcraft Crashworthy Airframe and Fuel System Technology Development Program," Report No. DOT/FAA/CT-91/7, FAA Technical Center Atlantic City International Airport, New Jersey, October 1994.

34. "Army Rotary Wing Accidents Involving Fire," Report No. 2-60, United States Army Board for Aviation Accident Research, Fort Rucker, Alabama, 1960.

35. "Army Aviation Safety with reference to Crash Injury and Crashworthiness Programs." TREC Technical Report 60-77, Flight Safety Foundation, New York, New York, December 1960.

36. Shanahan, Dennis F. and Maureen O. Shanahan, "Kinematics of U.S. Army Helicopter Crashes: 1979-85," *Aviation, Space, and Environmental Medicine*, Feb. 1989, 112-121.

37. Shanahan, Dennis F., "Crash Experience of the U.S. Army Black Hawk Helicopter," U.S. Army Aeromedical Research Division, Fort Rucker, Alabama, 1992.

38. Hall, D.S., "Report of the Reliability of Crash Resistant Fuel System Components Used in Army Helicopters," Hall Research, Stockton, California, July 1994.

39. Bennett, Charles V. and James V. Burkhard, "A Summary of Crash Fire and Injury Rates in Helicopter Accidents," Technical Development Report No. 313, FAA Technical Development Center, Indianapolis, Indiana, June 1957.

40. Snyder, Richard G., "Occupant Injury Mechanisms in Civil Helicopter Accidents," *AGARD Conference Proceedings No. 255*, Technical Editing and Reproduction Ltd., Harford House, London, England, December 1978.

41. "General Aviation Accidents: Postcrash Fires and How to Prevent or Control Them," Report No. NTSB-AAS-80-2, National Transportation Safety Board, Washington, D.C., August 1980.

42. Coltman, Joseph W., Akif O. Bolukbasi, and David H. Laananen, "Analysis of Rotorcraft Crash Dynamics for Development of Improved Crashworthiness Design Criteria," DOT/FAA/CT-85/11, FAA Technical Center, Atlantic City International Airport, New Jersey, June 1985.

43. "Annual Review of Aircraft Accident Data, U.S. General Aviation Calendar Year 1996," NTSB/ARG-99/01, National Transportation Safety Board, Washington, D.C., May 1999.

44. Aircraft Crash Survival Design Guide, Volume II, Aircraft Design Crash Impact Conditions and Human Tolerance," Report No. USAAVSCOM TR89-D-22B, U.S. Army Aviation Research and Technology Activity (AVSCOM), Fort Eustis, Virginia, December, 1989.

45. Johnson, N.B., S. H. Robertson, and D.S. Hall, "Aircraft Crash Survival Design Guide, Volume V – Aircraft Postcrash Survival," Report No. USAAVSCOM TR 89-D-22E, U.S. Army Aviation Research and Technology Activity (AVSCOM), Fort Eustis, Virginia, December, 1989.

46. Robertson, S. Harry, "Experimental Crash Resistant Fuel Tank Program," AvSER Report 65-23, Aviation Safety Engineering and Research, Phoenix, Arizona, December 1965.

47. Robertson, S. Harry, "Proposed Military Specification MIL-T-27422B, Tank, Fuel, Crash-Resistant, Aircraft," AvSER M-69-3, Dynamic Science (the AvSER Facility), Phoenix, AZ, April 1969.

48. Robertson, S. H., and Macaraeg, P., "A Program to Reduce the Postcrash Fire Potential of the Cessna 185 and 206 Aircraft," Robertson Aviation, Inc., Tempe, Arizona, May 1985.

49. Aeronautical Design Standard (ADS) 11B, "Survivability Program Rotary Wing," U.S. Army Aviation Systems Command, St. Louis, MO, Directorate for Engineering, May 1987. (Superseding ADS-11A, April 1976).

50. Aeronautical Design Standard (ADS) 36, "Rotary Wing Aircraft Crash Resistance," U.S. Army Aviation Systems Command, St. Louis, MO, Directorate for Engineering, 1 May 1987.

51. Air Force Guide Specification (AFGS) 87154 A, "Fuel Systems, General Design Specification for, ASC/ENES," Wright-Patterson Air Force Base, Ohio, 1 July 1972 (Superseding MIL-F-87154, August 1980).

52. Joint Service Specification Guide (JSSG) 2000, "Air System (Draft)," Joint Aeronautical Commanders' Group (JACG), Aviation Engineering Board (AEB), Wright-Patterson AFB, Ohio, Release 1 – 20 November 1998.

53. Joint Service Specification Guide (JSSG) 2009, "Subsystems – 30 October 1998," Joint Aeronautical Commanders' Group (JACG), Aviation Engineering Board (AEB), Wright-Patterson AFB, Ohio, Release 1–20 November 1998.

54. Advisory Circular (AC) 29-2B, "Certification of Transport Category Rotorcraft," Federal Aviation Administration, Washington, D.C., July 30, 1997.

55. Aerospace Recommended Practice (ARP) 1616, Revision A, "Self-Sealing Breakaway Valves for Crash-Resistant Aircraft Fuel and Oil Systems," Society of Automotive Engineers, Warrendale, Pennsylvania, April 1991.

56. Robertson, S. Harry and James W. Turnbow, "A Method for Selecting a Crashworthy Fuel System Design," *AGARD Conference Proceedings No. 255*, Technical Editing and Reproduction Ltd., Harford House, London, England, December 1978.

11. BIBLIOGRAPHY.

"A Comparison of Army Rotary and Fixed Wing Fire Accident Experience," Report No. HF 5-61, U.S. Army Board for Aviation Accident Research, Fort Rucker, Alabama, September 1961.

Abramowitz, Allan, Ingraham, Philip A., and McGuire, Robert, "Vertical Drop Test of a Shorts 3-30 Airplane," DOT/FAA/AR-99/87, FAA William J. Hughes Technical Center, Atlantic City International Airport, New Jersey, November 1999.

Advisory Circular (AC) 29-2B, "Certification of Transport Category Rotorcraft," Federal Aviation Administration, Washington, D.C., July 30, 1997.

Aeronautical Design Standard (ADS) 11B, "Survivability Program Rotary Wing," U.S. Army Aviation Systems Command, St. Louis, Missouri, Directorate for Engineering, May 1987, (Superseding ADS-11A, April 1976).

Aeronautical Design Standard (ADS) 36, "Rotary Wing Aircraft Crash Resistance," U.S. Army Aviation Systems Command, St. Louis, Missouri, Directorate for Engineering, 1 May 1987.

Aerospace Recommended Practice (ARP) 1616, "Revision A, Self-Sealing Breakaway Valves for Crash-Resistant Aircraft Fuel and Oil Systems," Society of Automotive Engineers, Warrendale, Pennsylvania, April 1991.

Ahlers, Robert H., "Investigation of Two Methods for Improving the Crashworthiness of Integral Fuel Tanks," FAA-RD-70-56, Federal Aviation Administration, Washington, D.C., November 1970, AD715445.

"Aircraft Crash Survival Design Guide, Volume V – Aircraft Postcrash Survival," Final Report USARTL-TR-79-22, U.S. Army Aviation Research and Technology Activity (AVSCOM), Fort Eustis, Virginia, January 1980.

"Aircraft Evacuation Testing: Research and Technology Issues," U.S. Office of Technology Assessment, PB94-107 620, Washington, D.C., September, 1993.

"Aircraft Fires—A Study of Transport Accidents From 1975 to the Present," *AGARD Conference Proceedings-467*, Advisory Group for Aerospace Research and Development, Neuilly-sur-Seine, France, 1989.

"Aircraft Fire Safety," *AGARD-LS-123*, Advisory Group for Aerospace Research and Development, Neuilly-sur-Seine, France, May 1982, AD-A116380.

"Aircraft Fire Safety," *AGARD Conference Proceedings-467*, Advisory Group for Aerospace Research and Development, Neuilly-sur-Seine, France, February 1990, AD-217575.

"Aircraft Fire Safety," *AGARD Conference Proceedings-587*, Advisory Group for Aerospace Research and Development, Neuilly-sur-Seine, France, October 1996, ADA 330134.

Aerospace Recommended Practice (ARP) 1664, "Aircraft Flexible Tanks General Design and Installation Recommendations," Society of Automotive Engineers, Warrendale, Pennsylvania.

Air Force Guide Specification (AFGS) 87154 A, "Fuel Systems, General Design Specification for, ASC/ENES," Wright-Patterson Air Force Base, Ohio, 1 July 1972 (Superseding MIL-F-87154, August 1980).

"Airworthiness Standards; Crash-Resistant Fuel Systems," NTSB response to ANPRM 85-7, July 1985.

"Airworthiness Standards; Crash-Resistant Fuel Systems," NPRM, Federal Aviation Administration, February 28, 1990.

"Airworthiness Standards; Crash-Resistant Fuel Systems in Normal and Transport Category Rotorcraft; Notice of Proposed Rulemaking," NPRM 90-24, Federal Aviation Administration, October 5, 1990.

"Airworthiness Standards; Crash-Resistant Fuel Systems in Normal and Transport Category Rotorcraft; Final Rule," Federal Aviation Administration, October 3, 1994.

"Annual Review of Aircraft Accident Data, U.S. General Aviation Calendar Year 1996," NTSB/ARG-99/01, National Transportation Safety Board, Washington, D.C., May 1999.

Anson, B., "Evaluation of Self-Sealing Breakaway Valves for Crashworthy Aircraft Fuel Systems," Dynamic Science Engineering Operations, USAAMRDL Technical Report 71-65, Eustis Directorate, U.S. Army Air Mobility Research and Development Laboratory, Fort Eustis, Virginia, November 1971, AD 738204.

"Army Aviation Safety With Reference to Crash Injury and Crashworthiness Programs," TREC Technical Report 60-77, Flight Safety Foundation, New York, New York, December 1960.

"Army Fixed Wing Accidents Involving Fire," Report No. HF1-61, U.S. Army Board for Aviation Accident Research, Fort Rucker, Alabama, September 1961.

"Army Rotary Wing Accidents Involving Fire," Report No. 2-60, United States Army Board for Aviation Accident Research, Fort Rucker, Alabama, 1960.

Arnold, D. B., Burnside, J. V., and Hajari, J. V., "Development of Lightweight Fire-Retardant, Low-Smoke High-Strength, Thermally Stable Aircraft Floor Paneling," Boeing Commercial Airplane Company, Technical Report NASA-CR-147750, National Aeronautics and Space Administration, Houston, Texas, April 1976.

Artis, Donald R., Jr., "Wire-Braided Hose Chafing Tests," USAAMRDL Technical Report 72-1, Eustis Directorate, U.S. Army Air Mobility Research and Development Laboratory, Fort Eustis, Virginia, January 1972, AD738842.

Asher, W. J., "Conceptual Design Study and Demulsification of Fuel Emulsions by a Coalescence Process," Esso Research and Engineering Cp., USAAVLABS Technical Report 69-16, U.S. Army Aviation Material Laboratories, Fort Eustis, Virginia, April 1969, AD 688973.

"A Study of United States Air Carrier Accidents Involving Fire 1955-1964," BOSP 7-6-3, Bureau of Safety Pamphlet, Civil Aeronautics Board, Washington, D.C., March 30, 1966.

"Aviation Safety: Installation of Smoke Detection and Fire Suppression Systems in U.S. Transport Aircraft," PB99112757, U.S. General Accounting Office, Washington, D.C., Resources, Community and Economic Development Division, December 19, 1997.

Badrocke, M. and Gunston, B., "Lockheed Aircraft Cutaways," Osprey Publishing, Ltd., London, England, 1998.

Badrocke, M. and Gunston, B., "The Illustrated History of Mcdonnell Douglas Aircraft," Osprey Publishing, Oxford, England, 1999.

Benner, L., Jr., Clark, R., and Lawton, R., "Study of General Aviation Fire Accidents (1974-1983)," Report No. DOT/FAA/CT-86-24, FAA Technical Center, Atlantic City International Airport, New Jersey, February 1987.

Bennett, Charles V. and Schroers, Robert J., "Impact Tests of Flexible Nonmetallic Aircraft Fuel Tanks Installed in Two Categories of Simulated Wing Structures," CAA Technical Development Report No. 291, Technical Development Center, Indianapolis, Indiana, January 1957.

Bennett, Charles V. and Burkhard, James V., "A Summary of Crash Fire and Injury Rates in Helicopter Accidents," Technical Development Report No. 313, FAA Technical Development Center, Indianapolis, Indiana, June 1957.

Bennett, Charles V. and Rodgers, Robert R., Jr., "Development of Crash-Resistant Aircraft Flammable Fluid Systems, Part I, Delineation of the Problem," Technical Development Report No. 397, FAA Technical Development Center, Indianapolis, Indiana, March 1959.

Berry, V. L. and Chronkhite, J. D., "KRASH Analysis Correlation With Full Scale Yah-63 Helicopter Crash Test," Bell Helicopter Textron, Inc., July 1981.

Berry, V. L., Chronkhite, J. D., and Haas, T. J., "Yah-63 Helicopter Crashworthiness Simulation and Analysis," USAAVRADCOM-TR-82-D-34, U.S. Army Research and Technology Laboratories (AVRADCOM), Fort Eustis, Virginia, February 1983.

Black, Dugald O., "Facilities and Methods Used in Full-Scale Airplane Crash-Fire Investigation," NACA Research Memorandum RM E51L06, Washington, March 1952.

Black, Dugald O. and Moser, Jacob C., "Full-Scale Performance Study of a Prototype Crash-Fire Protection System for Reciprocating-Engine-Powered Airplanes," NACA, Washington, November 15, 1955.

Blake, N.A., "Controlled Impact Demonstration Review," SAE Technical Paper Series 851884, Aerospace Technology Conference and Exposition, Long Beach, California, October 1985.

Boitnott, Richard L., Bolukbasi, Akif, O., and Kellas, Sotiris, "Helicopter Fuel Bladder Drop Tests and Analyses," American Helicopter Society, Washington, D.C., May 1994.

Bragg, Kenneth R., "An LN_2 Fuel Tank Inerting System For Commercial Transports," SAE 740852, SAE, Warrendale, Pennsylvania, October 1974.

Bridgman, A.L. and Nelson, G.L., "Heat Release Rate Calorimetry of Engineering Plastics," *Journal of Fire and Flammability*, Volume 13, April 1982, pp. 114.

Bruggink, G., "Impact Survival in Air Transport Accidents," Aviation Crash Injury Research, AvCIR-8-CSS-129, Phoenix, Arizona, January 20, 1961.

Buckson, W., Schlegel, W., and Smith, I.R., "Design, Development, and Evaluation of a Crash-Resistant Fuel System Installation," Technical Report FAA-ADS-27, Federal Aviation Agency, December 1965.

Byerley, D.L., "Evaluation of Various Sizes and Configurations of Fuel Tanks," Firestone Tire & Rubber Co., USAAMRDL Technical Report 73-74, Eustis Directorate, U.S. Army Air Mobility Research and Development Laboratories, Fort Eustis, Virginia, December 1973, AD 777801.

Carden, H.D., "Correlation and Assessment of Structural Airplane Crash Data With Flight Parameters at Impact," NASA Technical Paper 2083, Langley Research Center, Hampton, Virginia, November 1982.

Carden, Huey D., "Impulse Analysis of Airplane Crash Data With Consideration Given to Human Tolerance," SAE Technical Paper 830748, SAE, Warrendale, Pennsylvania, April 1983.

Carhart, H.W., Pinkel, I.I., and Warren, J.H., "Aircraft Kerosene Versus Wide-Cut Fuel-Safety Considerations," paper presented at Air Transportation meeting at New York City, Society of Automotive Engineers, New York, May 1976.

Carnell, Brian L., "Crash Survivability of the UH-60A Helicopter," *AGARD*, Aerospace Medical Panel Specialists Meeting, Fort Rucker, Alabama, May 1978.

Carroll, D.F., Robertson, S.H., and Cook, R.L., "Crash Survival Evaluation of the CH-47 Helicopter (A, B And C Models)," AvSER Memorandum Report M69-1, *Dynamic Science*, Phoenix, Arizona, January, 1969.

Catiller, J.B., Major, USAF, ed., "Aircraft Fire Safety," *AGARD Conference Proceedings No. 166*, North Atlantic Treaty Organization, Advisory Group for Aerospace Research and Development, Neuilly-sur-Seine, France, October 1975, AD A018180.

Chandler, R.F. ed., "Aircraft Crashworthiness," PT-50, Society of Automotive Engineers, Warrendale, Pennsylvania, 1995.

Chaturvedi, A.K. and Sanders, D.C., "Aircraft Fires, Smoke Toxicity, and Survival: An Overview," DOT/FAA/AM-95/8, Civil Aeromedical Institute, Federal Aviation Administration, Oklahoma City, Oklahoma, February, 1995.

Clark, John H., "Development of Crash-Resistant Aircraft Flammable Fluid Systems, Part IIA, Specifications for Prototype Fittings for Bladder-Type Fuel Tanks," Interim Report Task No. 59-203.8, FAA Test and Experimentation Division, Atlantic City, New Jersey, May 1960.

Cleveland Laboratory Aircraft Fire Research Panel, "Preliminary Survey of the Aircraft Fire Problem," NACA Research Memorandum No. E8B18, Flight Propulsion Laboratory, Cleveland, Ohio, May, 1948.

Coltman, Joseph W., Bolukbasi, Akif O., and Laananen, David H., "Analysis of Rotorcraft Crash Dynamics for Development of Improved Crashworthiness Design Criteria," DOT/FAA/CT-85/11, FAA Technical Center, Atlantic City Airport, New Jersey, June 1985.

Coltman, Joseph W. and Neri, Lawrence M., "Analysis of U.S. Civil Rotorcraft Accidents for Development of Improved Design Criteria," FAA Technical Center, Atlantic City Airport, New Jersey, 1986.

Coltman, Joseph W., "Rotorcraft Crashworthy Airframe and Fuel System Technology Development Program," Report No. DOT/FAA/CT-91/7, FAA Technical Center, Atlantic City International Airport, New Jersey, October 1994.

Cominsky, A., "Study of Aircraft Crashworthiness for Fire Protection," Contract NAS2-10583, Ames Research Center, Moffett Field, California, January 1981.

Cominsky, A., "Transport Aircraft Accident Dynamics," DOT/FAA/CT-82/70, NASA CR-165850, FAA Technical Center, Atlantic City International Airport, New Jersey, March 1982.

Cook, Richard L. and Goebel, Donald E., "Evaluation of the UH-1D/H Helicopter Crashworthy Fuel System in a Crash Environment," USAAMRDL Technical Report 71-47, U.S. Army Air Mobility Research and Development Laboratory, Fort Eustis, Virginia, November 1971.

"Crash Survival Design Guide," U.S. Army Air Mobility Research and Development Laboratory, Fort Eustis, Virginia, October 1971.

"Crash Survival Evaluation OH-5A Helicopter," AvSER Memorandum Report M66-11, Aviation Safety Engineering and Research, Phoenix, Arizona, April 1966.

"Crash Survival Evaluation OH-6A Helicopter," AvSER Memorandum Report M67-3, Aviation Safety Engineering and Research, Phoenix, Arizona, April 1967.

"Crashworthiness Design Handbook (Proposed)," Department of Transportation, Federal Aviation Administration, July 1971.

Chronkhite, J.D., Haas, T.J., Berry, V.L., and Winter, R., "Investigation of the Crash-Impact Characteristics of Advanced Airframe Structures," Final Report USARTL-TR-79-11, AVRADCOM, Fort Eustis, VA, September 1979.

Denney, M.A. and Broadley, D., "The Influence of Fire and Smoke Emission Properties on the Selection of Materials for Aircraft Interiors," American Institute of Aeronautics and Astronautics, New York, New York, November 1971.

Dougherty, James E., Jr., and Shapter, Nelson, N., "FAA Crashworthiness Program for Large and Small Airplanes," SAE, New York, 1969.

Edwards, W. Thomas and Perrella, William M. Jr., "Crash-Resistant Fuel Systems for General Aviation Aircraft," SAE Technical Paper Series 790592, SAE, Warrendale, Pennsylvania, 1979.

Enders, J.H. and Wood, E.C., "Final Report of the Special Aviation Fire and Explosion Reduction (SAFER) Advisory Committee," FAA-ASF-80-4, Federal Aviation Administration, Washington, D.C., June 1980.

Fasanella, Edwin, L., Alfaro-Bou, Emilio, and Hayduk, Robert J., "Impact Data From a Transport Aircraft During a Controlled Impact Demonstration," NASA Technical Paper 2589, NASA, 1986.

Field, R.L., Melvin F. Miller, and George L. Pigman, "An Investigation of the Crash Fire Problems in Transport Aircraft Fuel Tanks," CAA Technical Development Report No. 134, Technical Development and Evaluation Center, Indianapolis, Indiana, January, 1951.

"Final Report Lightweight Crash-Resistant Fuel Tank Material," Contract No. DAAJ02-91-C-0025, TR-91102, AATD, Fort Eustis, Virginia, May 27, 1992.

"Fire-Resistant Materials: Progress Report," DOT/FAA/AR-97/100, Federal Aviation Administration William J. Hughes Technical Center, Atlantic City International Airport, New Jersey, November 1998.

"Fire Safety Aspects of Polymeric Materials, Volume 6 – Aircraft: Civil and Military," Publication NMAB 318-6, National Materials Advisory Board, National Academy of Sciences, Washington, D.C., 1977.

Fitzgibbon, D.P. and Vollmer, Reuben P., "Crash Loads Environment Study," Technical Report FAA DS-67-2, Federal Aviation Agency, Washington, D.C., February 1967.

Fox, Roy G., "Realistic Civil Helicopter Crash Safety," *Crashworthy Design of Rotorcraft*, Georgia Institute of Technology, Atlanta, Georgia, April 1986.

"Fuel Spillage, Ignition Sources and Postcrash Fire in Survivable General Aviation Airplane Accidents," prepared by B & M Technological Services, Inc., Cambridge, MA, presented to General Aviation Safety Panel Meeting, Wichita, Kansas, June 4, 1986.

Gabella, William F. and Young, Wade L., "Summary of U.S. Army Crashworthy Fuel Systems Accident Experience," 1970-1973, *System Safety Newsletter*, Vol. 2, No. 3, U.S. Army Agency for Aviation Safety, Fort Rucker, Alabama, 1973.

Galaxy Scientific Corporation, "Proceedings of the International Conference for the Promotion of Advanced Fire-Resistant Aircraft Interior Materials," DOT/FAA/CT-93/3, Federal Aviation Administration Technical Center, Atlantic City International Airport, New Jersey, February, 1993, N94-10766.

Garrison, James R. and Waldrup, Herman H., "The Bell Model 222," SAE Paper 770951, Society of Automotive Engineers, Warrendale, Pennsylvania, November 1977.

"General Aviation Accidents: Postcrash Fires and How to Prevent or Control Them," Report No. NTSB-AAS-80-2, National Transportation Safety Board, Washington, D.C., August 1980.

Geyer, G.B., "Effect of Ground Crash Fire on Aircraft Fuselage Integrity," Report No. NA-69-37, Department of Transportation, Federal Aviation Administration, National Aviation Facilities Experimental Center, Atlantic City, New Jersey, December 1969, AD698806.

Gilewicz, A.E., "Assessment of the Benefits of Aircraft Crashworthiness," *USAAAVS System Safety Newsletter*, U.S. Army Agency for Aviation Safety, Vol. 5, No. 3, 1976.

Grand, A.F. and Valys, A.J., "Assessment of Burning Characteristics of Aircraft Interior Materials," Southwest Research Institute, 166390, NASA, Ames Research Center, Moffett Field, California, April 1982.

Hackler, Larry W., "Wing Leading Edge Fuel Tank Impact Tests, Final Report," FAA-RD-72-83, Federal Aviation Administration, Washington, D.C., October 1972.

Haley, J.L., Jr., Robertson, S.H., and Turnbow, J.W., "Crash Survival Evaluation OH-4A Helicopter," Memorandum Report No. M-65-9, Aviation Safety Engineering and Research, Phoenix, Arizona, June 1965.

Haley, J.L., Jr., "Helicopter Structural Design for Impact Survival," SW-70-16, U.S. Army Board for Aviation Accident Research, Fort Rucker, Alabama, presented at the Joint Symposium on Environmental Effects of VTOL Designs, in Arlington, Texas, November 1970.

Hanagud, S. and Sarkar, S., "Kane's Method for Analyzing Crash Sequences and Crashworthy Design," Georgia Institute of Technology, 1983.

Hansberry, H.L., "Aircraft Fire Protection Developments by the Federal Aviation Administration (1940-1970)," Federal Aviation Administration, Atlantic City International Airport, New Jersey, 1970.

Hardtmann, Dirk J., "Lightweight Crash-Resistant Fuel Tank Material," Report No. TR-91102, Simula Inc., Phoenix, Arizona, May 1992.

Harris, J.C. and Steinmetz, E.A., "Optimization of JP-4 Fuel Emulsions and Development of Design Concepts for Their Demulsification," USAAVLABS Technical Report 68-79, U.S. Army Aviation Materiel Laboratories, Fort Eustis, Virginia, November 1968.

Hayduk, Robert J., Alfaro-Bou, Emilio, and Fasanella, Edwin L., "NASA Experiments Onboard the Controlled Impact Demonstration," SAE Technical Paper Series 851885, SAE, Warrendale, Pennsylvania, 1985.

Hibbard, R.P. and Hacker, P.T., "An Evaluation of the Relative Fire Hazards of Jet A and Jet B for Commercial Flight," NASA Technical Memorandum X-71437, Lewis Research Center, National Aeronautics and Space Administration, Washington, D. C., October 1973.

Hillman, D.A. and Schroers, R.J., "Calculation of the Strength of Crash-Resistant Fuel Cells for the Wings of a Twin-Engine and a Four-Engine Transport Airplane," Final Report Task No. 59-203.4, National Aviation Facilities Experimental Center, Atlantic City, New Jersey, April 1961.

Horeff, Thomas G., "A Crashworthiness Analysis With Emphasis on the Fire Hazards: U.S. and Selected Foreign Turbine Aircraft Accidents 1964-1974, Final Report," FAA-RD-75-156, Federal Aviation Administration, July 1976.

"Installation of Plastic Foam and Metallic Mesh in Fuel Tanks of Helicopters and Small Airplanes," Advisory Circular, 20.XX, Federal Aviation Administration, April 1984.

Institute for Research, Inc., "Development of a Protective, Decorative, Fire-Resistant, Low-Smoke Emitting, Thermally Stable Coating Material," Report No. N 76-18234, Houston, Texas, January 1976.

Johnson, N.B., Rogers, J.H., and Cook, R.L., "Aircraft Fuel Systems Design Study," USAAVLABS Technical Report 67-33, U.S. Army Aviation Materiel Laboratories, Fort Eustis, Virginia, 1967.

Johnson, Neva B., Goebel, Donald E., and Robertson, S. Harry, "An Appraisal of the Postcrash Fire Environment," Technical Report 70-22-CE, U.S. Army Natick Laboratories, Natick, Massachusetts, September 1969.

Johnson, Neva B., "Crashworthy Fuel System Design Criteria and Analyses," USAAVLABS Technical Report 71-8, U.S. Army Air Mobility Research and Development Laboratory, Fort Eustis, Virginia, March 1971.

Johnson, N.B., Robertson, S.H., and Hall, D.S., "Aircraft Crash Survival Design Guide, Volume V – Aircraft Postcrash Survival," Report No. USAAVSCOM TR 89-D-22E, U.S. Army Aviation Research and Technology Activity (AVSCOM), Fort Eustis, Virginia, December 1989.

Johnson, Richard and Wade, Barry, "Longitudinal Impact Test of a Transport Airframe Section," Final Report DOT/FAA/CT-87/26, FAA Technical Center, Atlantic City International Airport, New Jersey, July 1988, ADA 199309.

Joint Service Specification Guide (JSSG) 2000, "Air System (Draft)," Joint Aeronautical Commanders' Group (JACG), Aviation Engineering Board (AEB), Wright-Patterson AFB, Ohio, Release 1-20 November 1998.

"Joint Service Specification Guide (JSSG) 2009, "Subsystems—30 October 1998," Joint Aeronautical Commanders' Group (JACG), Aviation Engineering Board (AEB), Wright-Patterson AFB, Ohio, Release 1-20 November 1998.

Kimura, C.Y., "World Commercial Aircraft Accidents, 2nd Edition, 1946-1992," Lawrence Livermore National Laboratory, January 1993, UCRL-ID-112905.

Knapp, S.C., Allemond, Pierre, and Karney, David H., "Helicopter Crashworthy Fuel Systems and Their Effectiveness in Preventing Thermal Injury," *AGARD Conference Proceedings No. 225*, Technical Editing and Reproduction Ltd., Harford House, London, England, December 1978.

Knapp, S.C., ed., "Operational Helicopter Aviation Medicine," *AGARD Conference Proceedings No. 255*, Technical Editing and Reproduction Ltd., Harford House, London, England, December 1978.

Kosvic, T.C., Holgeson, N.L., and Breen, B.P., "Flight Vibration and Environmental Effects on Formation of Combustible Mixtures Within Aircraft Fuel Tanks," *Dynamic Science*; USAAVLABS Technical Report 70-43, U.S. Army Aviation Material Laboratories, Fort Eustis, Virginia, September 1970.

Kourtides, D.A., and Parker, J.A., "The Relative Fire Resistance of Select Thermoplastic Materials," *Plastics Design & Processing*, April 1978.

Kuchta, Joseph M., Cato, Ralph J., and Gilbert, Whittner H., "Flame Arrestor Materials for Fuel Tank Explosion Protection," AFAPL-TR-70-40, U.S. Department of Commerce, NTIS, July 1970, AD874047.

Kuchta, Joseph M., "Fire and Explosion Manual for Aircraft Accident Investigators," AFAPL-TR-73-74, USAF Contract No. F33615-72-M-5008, July 1973.

Kuchta, J.M. and Clodfelter, R.G., "Aircraft Mishap Fire Pattern Investigations," Report No. AFWAL-TR-85-2057, AF Wright Aeronautical Laboratories, Wright-Patterson AFB, Ohio, August 1985.

Kuhn, R.L., Potts, W.J., and Waterman, T.E., "A Study of the Inhalation Toxicity of Smoke Produced Upon Pyrolysis and Combustion of Polyethylene Foams," *Fire Retardants:*

Proceedings of 1978 Conference on Flammability and Fire Retardants, Westport, Connecticut, Technomic Publishing Co., 1978.

Logue, Thomas V., McGuire, Robert J., Reinhardt, John W., and Vu, Tong V., "Vertical Drop Test of a Narrow-Body Fuselage Section With Overhead Stowage Bins and Auxiliary Fuel Tank System on Board," Final Report DOT/FAA/CT-94/116, Federal Aviation Administration Technical Center, Atlantic City International Airport, New Jersey, April 1995.

Lucha, G.V., Robertson, M.A. and Schooley, F.A., "An Analysis of Aircraft Accidents Involving Fires," NASA CR 137690, Stanford Research Institute, Menlo Park, California, May 1975.

Madgwick, T., "Aircraft Postcrash Fire Reduction/Survivability Enhancement From a Manufacturer's Viewpoint," AGARD, *AGARD-LS-123*, North Atlantic Treaty Organization, 1982.

Malmberg, Q.C. and Wiggins, E.W., "Advanced Flame Arrestor Materials and Techniques for Fuel Tank Protection," McDonnell Douglas Corp., Technical Report 72-12, Air Force Aero Propulsion Laboratory, Wright-Patterson Air Force Base, Ohio, March 1972, AD 743016.

Malmberg, Q.C., "Integrated Aircraft Fuel Tank Fire and Explosion Protection Systems-Phase I And II," McDonnell Douglas Corp., St. Louis, Missouri, NTIS, Air Force System Command, Wright-Patterson Air Force Base, Ohio, July 30, 1975, AD A020589.

Mason, R.V., "Smoke and Toxicity Hazards in Aircraft Cabin Furnishings," *Annual of Occupational Hygiene*, Vol. 17, 1974, pp. 159-165.

McDonald, W.C., "New Energy-Absorbing Materials for Crash-Resistant Fuel Tanks," SAE Paper 680210, Society of Automotive Engineers, New York, New York, April 1968.

McGuire, Robert J., Nissley, William J., and Newcomb, James E., "Vertical Drop Test of a Metro III Aircraft," DOT/FAA/CT-93/1, FAA Technical Center, Atlantic City International Airport, New Jersey, Final Report, June 1993.

McGuire, R. and Vu, T., "Vertical Drop Test of a Beechcraft 1900C Airliner," DOT/FAA/AR-96/119, Federal Aviation Administration William J. Hughes Technical Center, Atlantic City International Airport, New Jersey, May 1998, PB 98152770.

McGuire, R. and Vu, T., "Beechcraft 1900C Vertical Impact Test," DOT/FAA/AR-TN99/25, Federal Aviation Administration William J. Hughes Technical Center, Atlantic City International Airport, New Jersey, May 1999, PB99149726.

McGuire, R. and Macy, T., "Longitudinal Acceleration Tests of Overhead Luggage Bins and Auxiliary Fuel Tank in a Transport Airplane Airframe Section," DOT/FAA-AR-99/4, Federal Aviation Administration William J. Hughes Technical Center, Atlantic City International Airport, New Jersey, June 1999.

Military Specification MIL-T-27422B, "Tank, Fuel, Crash-Resistant, Aircraft," Department of Defense, Washington, D.C., February 1970.

Military Standard MIL-STD-1290, "Light Fixed- and Rotary-Wing Aircraft Crashworthiness," Department of Defense, Washington, D.C., January 1974.

Miller, R.E. and Wilford, S.P., "The Development of an Aircraft Safety Fuel," Royal Aircraft Establishment, England; Report No. A76-14419, American Institute of Aeronautics and Astronautics, New York, April 1975.

"Minutes of the Crash-Resistant Fuel Tank Conference," Technical Development Center, Indianapolis, Indiana, June 1956.

Monaco, S., "Fuel Line Study; Technical Note," Atlantic Science and Technology Corp., DOT-FAA Technical Center, Report No. DOT/FAA/CT-TN94/14, FAA William J. Hughes Technical Center, Atlantic City International Airport, New Jersey, July 1994, ADA 284-918.

Naegeli, D.W., et al., "A Study of Aircraft Post-Crash Fuel Fire Mitigation," Interim Report BFLRF No. 292, Contract No. DAAK70-92-C-0059, U.S. Army Tardec, Fort Belvoir, Virginia, prepared for Federal Aviation Administration, Atlantic City Airport, New Jersey, June 1994.

National Transportation Safety Board, "Aircraft Accident Report, Uncontained Engine Failure," NTSB/AAR-98/01, Washington, D.C., July 6, 1996.

National Transportation Safety Board, "Aircraft Accident Report, In-Flight Fire/Emergency Landing," NTSB/AAR-98/03, Washington, D.C., September 5, 1996.

Nissley, P.M. and Held, T.L., "Structural Design for Fuel Containment Under Survivable Crash Conditions," General Dynamics/Convair, FAA Technical Report ADS-19, Department of Transportation, Federal Aviation Administration, Washington, DC, August 1964.

North, David E., 2nd Lt., USAF, "Criteria for the Design and Installation of Crash-Resistant Fuselage Fuel Cells," WADC Technical Note 58-236, Wright Air Development Center, Wright-Patterson Air Force Base, Ohio, June 1958.

Onishi, Masayoshi and Yoshimura, Tsutomu, "Full Scale Crash Test of a BK117 Helicopter," Kawasaki Heavy Industries, Ltd., Gifu Works, Japan, March 1985.

"Operational Helicopter Aviation Medicine," A*GARD-Conference Proceedings-255*, Advisory Group for Aerospace Research and Development, AGARD Conference Pro Neuilly-sur-Seine, France, May 1978.

"Piper Navajo Fuel Tanks FAA Crash Resistant Modifications Tanks and Testing," Final Report FC-1641-77, Contract DOT-FA75NA-2122, Project Number 5-75-1017, Uniroyal, Inc., Engineered Systems Department, Mishawaka, Indiana, March 1977.

Pedriani, C.M., "A Study of the Fuel/Air Vapor Characteristics in the Ullage of Aircraft Fuel Tanks," USSAVLABS Technical Note 3, U.S. Army Aviation Materiel Laboratories, Fort Eustis, Virginia, June 1970.

Perrella, W.N., Jr., "Tests of Crash-Resistant Fuel System for General Aviation Aircraft," Department of Transportation, Federal Aviation Administration, Washington, D.C., March 1978.

Pesman, Gerard J., "Appraisal of Hazards to Human Survival in Airplane Crash Fires," NACA Technical Note 2996, Lewis Flight Propulsion Laboratory, Cleveland, Ohio, September 1953.

Pinkel, I. Irving, G. Merritt Preston, and Gerard J. Pesman, "Mechanism of Start and Development of Aircraft Crash Fires," NACA Report 1133, Lewis Flight Propulsion Laboratory, Cleveland, Ohio, 1953.

Pinkel, I. Irving, Weiss, Solomon, Preston, G. Merritt, and Pesman, Gerard J., "Original and Prevention of Crash Fires in Turbojet Aircraft," Report 1363, NACA, 1958.

"Preliminary Survey of the Aircraft Fire Problem," NACA RM No. E8B18, Washington, May 21, 1948.

Preston, G. Merritt and Pesman, Gerard J., "Accelerations in Transport-Airplane Crashes," NACA, Washington, February 1958.

Quintiere, J.B., Babrauskas, V., Cooper, L., Harkleroad, M., and Steckler, K., "The Role of Aircraft Panel Materials in Cabin Fires and Their Properties, National Bureau of Standards; DOT/FAA/CT-84/30, FAA Technical Center, Atlantic City International Airport, New Jersey, June 1985.

Reed, T.O., "Effects of Polyurethane Foam on Fuel System Contamination," Technical Memorandum ENJI-70-10, Fluid Systems Branch, Directorate of Propulsion and Power Subsystems Engineering, Wright-Patterson Air Force Base, Ohio, November 1970.

Reed, W.H., Robertson, S.H., Weinberg, L.W.T., and Tyndall, L.H., "Full-Scale Dynamic Crash Test of a Douglas DC-7 Aircraft," Technical Report, FAA-ADS-37, Federal Aviation Agency, AvSER, April 1965.

Reed, W.H., Robertson, S. H., Weinberg, L.W.T., and Tyndall, L.H., "Full-Scale Dynamic Crash Test of a Lockheed Constellation Model 1649 Aircraft," Technical Report FAA-ADS-38, Federal Aviation Agency, October 1965.

Robertson, S. Harry and Rothe, Victor E., "Experimental Crash Resistant Fuel Tank Program," AvSER Report No. 65-23, Aviation Safety Engineering and Research, Phoenix, Arizona, December 1965.

Robertson, S. Harry, "A New Look at Fuel System Design Criteria," SAE 660794, AvSER, 1966.

Robertson, S. Harry and Walbout, G.I., "Crashworthy Fuel System Design," Technical Report, AvSER 66-13, May 6, 1966.

Robertson, S. Harry and Turnbow, James W., "Aircraft Fuel Tank Design Criteria," USAAVLABS Technical Report 66-24, U.S. Army Aviation Materiel Laboratories, Fort Eustis, Virginia, March 1966.

Robertson, S. Harry, "Development of a Crash-Resistant Flammable Fluids System for the UH-1A Helicopter," USAAVLABS Technical Report 68-82, U.S. Army Aviation Materiel Laboratories, Fort Eustis, Virginia, January 1969.

Robertson, S. Harry, "Proposed Military Specification MIL-T-27422B, Tank, Fuel, Crash-Resistant, Aircraft," AvSER M-69-3, Dynamic Science (the AvSER Facility), Phoenix, Arizona, April 1969.

Robertson, S. Harry, "The UH-1D/H Crash Resistant Fuel System Development Program," Dynamic Science, Phoenix, Arizona, December 1969.

Robertson, S. Harry and Adamczyk, Ted J., "Crashworthy Fuel Systems," *Aircraft Crashworthiness*, University Press of Virginia, Charlottesville, Virginia, 1975.

Robertson, S.H., and Turnbow, J.W., "A Method for Selecting a Crashworthy Fuel System Design," AGARD, *Agard-Conference Proceedings-255*, North Atlantic Treaty Organization, 1978.

Robertson, S.H., "Improvements in Fuel Containment Crashworthiness for Aircraft Operated by the Mission Aviation Community, Phase I Report," Mission Aviation Fellowship, Redlands, California, September 15, 1980.

Robertson, S.H., and Macaraeg, P., "A Program to Reduce the Postcrash Fire Potential of the Cessna 185 and 206 Aircraft," Robertson Aviation, Inc., Tempe, Arizona, May 1985.

Robertson, S. Harry and Bracken, Jeffrey W., "Crashworthy Fuel Tanks: How We Got Where We Are and Where We Should go From Here," American Helicopter Society, May 1999.

Robinson, K.D., "An Investigation of Methods to Control Postcrash Fuel Spill From Integral Fuel Tanks," Final Report, FAA-RD-71-75, Federal Aviation Administration, Washington, D.C., December 1971. AD733607.

Saczalski, K., Singely, G.T., III, Pilkey, W.D., and Huston, R.L., eds., "Aircraft Crashworthiness," University Press of Virginia, Charlottesville, Virginia, 1975.

Scheuerman, H.P., "Crash Resistant Fuel Systems Demonstrations and Evaluation," Report No. FAA-RD-71-27, National Aviation Facilities Experimental Center, Atlantic City, New Jersey, August 1971.

Schroers, Robert J., "Some Developments for Greater Crash Safety in Aircraft," SAE National Aeronautic Meeting, Los Angeles, California, October 1951.

Scott, Richard P., "Review and Evaluation of the Literature on Fuel Containment and Fuel Tank Explosion Suppression Technology to Assess Applicability to General Aviation Airplanes," Final Report, FAA Technical Center, Atlantic City Airport, New Jersey, August 1985.

Scull, W.D., "Relation Between Inflammables and Ignition Sources in Aircraft Environments," Lewis Flight Propulsion Laboratory, NACA Report 1019, National Advisory Committee for Aeronautics, Cleveland, Ohio, 1951.

Shanahan, Dennis F. and Shanahan, Maureen O., "Kinematics of U.S. Army Helicopter Crashes: 1979-85," *Aviation, Space, and Environmental Medicine*, February 1989, pp. 112-121.

Shannon, S.G. and Shanahan, D.F., "Estimating the Impact of Crashworthiness Standards on Mortality and Morbidity Events In U.S. Army Rotary-Wing Aircraft Mishaps," USAARL Report No. 93-37, United States Army Aeromedical Research Laboratory, Fort Rucker, Alabama, September, 1993, AD-277 121.

Shanahan, Dennis F., "Crash Experience of the U.S. Army Black Hawk Helicopter," U.S. Army Aeromedical Research Division, Fort Rucker, Alabama, 1992.

Shaw, L.M., "Safety Evaluation of Emulsified Fuels," USAAMRDL Technical Report 71-29, Eustis Directorate, U.S. Army Air Mobility Research and Development Laboratory, Fort Eustis, Virginia, June 1971.

Singley, George T., III, "Full Scale Crash Testing of a CH-47C Helicopter," American Helicopter Society, Washington, D.C., May 1976.

Skifstad, J.G., et al., "Ignition of Fuel Sprays by Hot Surfaces and Stabilization of Aircraft Fires," AFOSR-TR-79-0079, DTIC, Alexandria, Virginia, November 1978, AD-A065153.

Smith, H.D., "Crash-Resistant Fuel Tanks for Helicopters and General Aviation Aircraft," presented at National Business Aircraft Meeting, Wichita, Kansas, Society of Automotive Engineers, New York, April 1974.

Smith, K.F., "Full Scale Crash Test (T-41) of the Yah-63 Attack Helicopter," USAAVSCOM TR-86-D-2, U.S. Army Aviation Research and Technology Activity (AVSCOM), Fort Eustis, Virginia, April 1986.

Snyder, Richard G., "Occupant Injury Mechanisms in Civil Helicopter Accidents," *Operational Helicopter Aviation Medicine, AGARD Conference Proceedings No. 255*, Technical Editing and Reproduction Ltd., Harford House, London, England, December 1978.

Soltis, S., Caiafa, C., and Wittlin, G., "FAA Structural Crash Dynamics Program Update—Transport Category Aircraft," SAE Technical Paper 851887, SAE, Warrendale, Pennsylvania, October 1985.

Sommers, John, Jr. and Clark, John H., "The Development of Aircraft Crash-Resistant Fuel Cells, Safety Valves, and Breakaway Accessories," SAE Paper 517D, Society of Automotive Engineers, New York, New York, April 1962.

"Special Study: U.S. Air Carrier Accidents Involving Fire, 1965 Through 1974 and Factors Affecting the Statistics," NTSB-AAS-77-1, NTSB, Washington, D.C., February 1977, PB266883.

Spencer, Lloyd E., "Breakaway Fuel Cell Concept," TREC Technical Report 62-37, Aviation Crash Injury Research, Phoenix, Arizona, May 1962.

Spezia, E., "U.S. Army Helicopter Accidents Involving Fire," Report 1-64, U.S. Army Board of Aviation Accident Research, Fort Rucker, Alabama, 1963.

Spicer, Herbert C., Jr., Voyls, Donald W., and Carroll, Donald F., "Crash Safety Tests of Two Transport Aircraft," SAE 920C, SAE, New York, October 1964.

Stuart, Jay W., "Fuselage Ventilation Due to Wind Flow About a Postcrash Aircraft," JPL Publication 80-36, NASA, June 15, 1980.

"Systems and Techniques for Reducing the Incidence of Post-Crash Fuel System Fires and Explosions," Report to Congress FAA-P-8110.3, U.S. Department of Transportation, Washington, D.C., December 1988.

Taylor, A.F., "A Study of Survivable Aircraft Accidents Involving Post Impact Fire," College of Aeronautics Memo 7602, Cranfield Institute of Technology, College of Aeronautics, January 1976.

Taylor, A. Frank, "WO2449, Airworthiness Requirements: Accidents Investigation & Safety Recommendations," ISASI '98 Seminar, Barcelona, October 1998.

Taylor, A. Frank, "A Review of Fire Related Accidents, 1985-1995," College of Aeronautics Memo 7602, Cranfield Institute of Technology, College of Aeronautics, 1996.

Thomson, R.G. and Caiafa, C., "Structural Response of Transport Airplanes in Crash Situations," Final Report, DOT/FAA/CT-83/42, NASA-TM-85654, FAA Technical Center, Atlantic City Airport, New Jersey, November 1983.

Thompson, R.G. and Goetz, R.C., "NASA/FAA General Aviation Crash Dynamics Program—A Status Report," AIAA Paper No. 79-0780, NASA Langley Research Center, Hampton, Virginia, April 1979.

Thompson, R.G., Carden, H.D., and Hayduk, R.J., "Survey of NASA Research and Crash Dynamics," NASA Technical Paper 2298, Langley Research Center, Hampton, Virginia, April 1984.

"Transport Airplane Fuel Tank System Design Review, Flammability Reduction, and Maintenance and Inspection Requirements; Proposed Rule, Part VI," NPRM 99-18, FAA/DOT, October 29, 1999.

Turnbow, James W., "A Dynamic Crash Test of an H-25 Helicopter," SAE Paper 517A, Society of Automotive Engineers, New York, New York, April 1962.

Turnbow, J.W., et al, "Crash Survival Design Guide," USAAVLABS Technical Report 67-22, U.S. Army Aviation Materiel Laboratories, Fort Eustis, Virginia, July 1967.

Turnbow, J.W., Carroll, D.F., Haley, J.L., Jr., and Robertson, S.H., "Crash Survival Design Guide," USAAVLABS Technical Report 70-22, U.S. Army Aviation Materiel Laboratories, Fort Eustis, Virginia, August 1969.

Tuttle, Major Warren D., USAF, BSC, "Aircraft Crashworthiness: History, Requirements, and Goals," The Advanced Medium STOL Transport System Program Office, Wright-Patterson AFB, Ohio, January 27, 1976.

"United States Army Aviation Crash Injury Research," TREC Technical Report 62-13, Aviation Crash Injury Research, Phoenix, Arizona, September 1961.

"United States Army Aviation Crash Survival Research—Summary Report," USAAVLABS Technical Report 66-43, U.S. Army Aviation Materiel Laboratories, Fort Eustis, Virginia, June 1966.

"U.S. Army Aviation R&D Technical Reports Published in 1972," Air Mobility Research and Development Laboratory, Ames Research Center, Moffett Field, California, June 1973.

U.S. Army Trecom Contract DA-44-177-TC-624, "Army Aviation Safety: Crash Injury, Crashworthiness," TREC Technical Report 60-77, AvCIR 70-0-128, December 30, 1960.

Villemain, H.F., "Design and Evaluation of Crashworthy, Ballistically Tolerant Fuel Tank Material," The Goodyear Tire & Rubber Company, USAAMRDL Technical Report 74-103, Eustis Directorate, U.S. Army Air Mobility Research and Development Laboratory, Fort Eustis, Virginia, January 1975, AD B002702.

Warrick, James C. and Desjardins, Stanley P., "The Status of Crashworthiness Design Criteria," Simula Inc. March 9, 1987.

Webster, Harry, "Fuselage Burnthrough From Large Exterior Fuel Fires," DOT/FAA/CT-90/10, Federal Aviation Administration Technical Center, Atlantic City International Airport, New Jersey, July 1984, ADA 286 925.

Webster, Harry, "Full-Scale Air Transport Category Fuselage Burnthrough Tests," DOT/FAA/CT-TN89/65, FAA Technical Center, Atlantic City International Airport, New Jersey, February 1990, N9020967.

Webster, Harry, "Fuel Fire Penetration Test and Destruction of a Transport Aircraft," Final Report, DOT/FAA/AR-96/48, FAA Technical Center, Atlantic City International Airport, New Jersey, December 1996, PB98158272.

Weiss, Solomon and Pesman, Gerald J., "Bibliography of Unclassified Aircraft-Fire Literature," RM E9H03, National Advisory Committee for Aeronautics, Washington, November 10, 1949.

Weitz, P.G., "Commercial Aircraft Airframe Fuel Systems Survey," DOT/FAA/CT-82/08, FAA Technical Center, Atlantic City Airport, New Jersey, July 1982, ADA119572.

Widmayer, E., and Brende, Otto B., "Commercial Jet Transport Crashworthiness," DOT/FAA/CT-82/86, NASA CR-165849, FAA Technical Center, Atlantic City International Airport, New Jersey, April 1982, N8223207.

Williams, M. Susan and Fasanella, Edwin L., "Crash Tests of Four Low-Wing Twin-Engine Airplanes With Truss-Reinforced Fuselage Structure," NASA Technical Paper 2070, September 1982.

Williams, M. Susan and Hayduk, Robert J., "Vertical Drop Test of a Transport Fuselage Section Located Forward of the Wing," NASA Technical Memorandum 85679, Langley Research Center, Hampton, Virginia, August 1983.

Williams, M. Susan and Hayduk, Robert J., "Vertical Drop Test of a Transport Fuselage Center Section Including the Wheel Wells," NASA Technical Memorandum 85706, Langley Research Center, Hampton, Virginia, October 1983.

Wittlin, G., Gamon, M., and Shycoff, D., "Transport Aircraft Crash Dynamics," DOT/FAA/CT-82/69, NASA Contractor Report 165851, FAA Technical Center, Atlantic City International Airport, New Jersey, March 1982.

Wittlin, Gil, "Fuel Containment Concepts—Transport Category Airplanes," DOT/FAA/CT-87/18, FAA Technical Center, Atlantic City International Airport, New Jersey, November 1987, ADA 189818.

Wittlin, Gil, "Investigation of Transport Airplane Fuselage Fuel Tank Installations Under Crash Conditions," DOT/FAA/CT-88/24, FAA Technical Center, Atlantic City International Airport, New Jersey, July 1989, ADA 212227.

Wyeth, H.W.G., "Fuel System Protection Methods," *AGARD-LS-123*, North Atlantic Treaty Organization, 1982.

Yaffee, Michael L., "Antimisting Fuel Research and Development for Commercial Aircraft—Final Summary Report," DOT/FAA/CT-86/7, Federal Aviation Administration Technical Center, Atlantic City International Airport, New Jersey, April 1986, AD172183.

Yancey, Merritt M. and Headrick, Richard T., "An Engineering Investigation and Analysis of Crash-Fire Resistant Fuel Tanks," FA-67 NF-245, U.S. Department of Commerce, NTIS, July 1970, AD 709846.

Zapp, J.A., Jr., "The Toxicology of Fire," Medical Division Special Report No. 4, Army Chemical Center, Maryland, April 1951.

Zinn, S.U., Jr., "Crash Fire Hazard Evaluation of Jet Fuels," Federal Aviation Administration; Paper No. 720324, presented at National Business Aircraft Meeting at Wichita, Kansas, Society of Automotive Engineers, Inc., New York, March 1972.

APPENDIX A—ACCIDENT INVESTIGATION FORMS

NTSB Form 6120.4, Supplement A – Wreckage Documentation, Single and Twin Reciprocating Engine and Unpowered Aircraft, page 2.

NTSB Form 6120.4, Supplement C – Wreckage Documentation, Multi-(3 or more) Reciprocating Engine and Turbine-Powered Aircraft, page 2.

NTSB Form 6120.4, Supplement G – Rotorcraft

NTSB Form 6120.4, Supplement I – Crash Kinematics, 3 pages

NTSB Form 6120.4, Supplement K – Occupant, Survival and Injury Information, 5 pages.

NTSB Form 6120.4, Supplement L – Seat, Restraint System and Fuselage Deformation, 3 pages.

NTSB Form 6120.4, Supplement N – Fire/Explosion, 2 pages.

Army DA Form 2397-6-R Part VII Inflight or Terrain Impact and Crash Damage Data, 2 pages

Army DA Form 2397-9-R Part X Injury/Occupational Illness Data

Army DA Form 2397-10-R Part XI Personnel Protective/Escape/ Survival/Rescue Data

Army DA Form 2397-12-R Part XIII Fire Data

National Transportation Safety Board

FACTUAL REPORT
AVIATION

NTSB Accident/Incident Number

Supplement A—Wreckage Documentation, Single and Twin Reciprocating Engine and Unpowered Aircraft (continued)

Fuel Tanks	Fuel on Board at Accident			D Tank Construction				F Spillsafe Fittings			H Fuel Leakage/Rupture				
	A Gallons Estimated	B Gallons Verified	C Other	1 Wet Wing	2 Bladder	3 Metal	E Other	1 Yes	2 No	G Other	1 None	2 Line	3 Fitting	4 Tank	I Other
33 Left Wing															
34 Right Wing															
35 Left Tip															
36 Right Tip															
37 Fuselage															
38 (Specify)															

41 Fuel Found in #1 Engine *(Multiple entry)*

1 ☐ None
2 ☐ Lines
3 ☐ Gascolator/strainer
4 ☐ Carburetor/fuel injector
5 ☐ Engine driven pump
6 ☐ Auxiliary fuel pump
7 ☐ Filter(s)
8 ☐ Selector valve
9 ☐ Fuel manifold/spider
10 ☐ Accumulator tank
A Other

42 Fuel Found in #2 Engine *(Multiple entry)*

1 ☐ None
2 ☐ Lines
3 ☐ Gascolator/strainer
4 ☐ Carburetor/fuel injector
5 ☐ Engine driven pump
6 ☐ Auxiliary fuel pump
7 ☐ Filter(s)
8 ☐ Selector valve
9 ☐ Fuel manifold/spider
10 ☐ Accumulator tank
A Other

43 Flight Controls, Evidence of Operational Failure or Malfunction *(Multiple entry)*

1 ☐ None
2 ☐ Pitch control
3 ☐ Roll control
4 ☐ Yaw control
A Other

44 Airframe/Structure, Evidence of In-Flight Separation/Failure *(Multiple entry)*

1 ☐ None
2 ☐ Helicopter *(Complete Supp. G)*
3 ☐ General disintegration
4 ☐ Left wing
5 ☐ Right wing
6 ☐ Left stab/elevator
7 ☐ Right stab/elevator
8 ☐ Vertical fin/rudder
9 ☐ Canard
10 ☐ Powerplant
11 ☐ Cabin/cargo door
A Other

45 Propeller, Evidence of In-Flight Separation/Failure

1 ☐ Yes
2 ☐ No
A Other

46 Powerplant, Evidence of In-Flight Mechanical Malfunction

1 ☐ Yes
2 ☐ No
A Other

47 Fuel, Evidence of Improper Grade or Contamination *(Multiple entry)*

1 ☐ None
2 ☐ Improper grade
3 ☐ Contamination
A Other

48 Oil, Evidence of Improper Grade or Contamination *(Multiple entry)*

1 ☐ None
2 ☐ Improper grade
3 ☐ Contamination
A Other

Emergency Locator Transmitter (ELT) Information

51 ELT Manufacturer

_____

A Other

52 ELT Model No.

_____

A Other

53 ELT Battery Type

1 ☐ Alkaline
2 ☐ Cadmium
3 ☐ Nicad
4 ☐ Nickel
5 ☐ Lithium
A Other

54 ELT Battery Expiration Date *(Nos. for M, D, Y)*

_____

A Other

55 Preimpact ELT Location(s) *(Multiple entry)*

1 ☐ Cockpit
2 ☐ Cabin
3 ☐ Tailcone
4 ☐ Empennage
5 ☐ Raft
6 ☐ Survival Kit
A Other

56 ELT-Reason for Noneffectiveness/Failure *(Multiple entry)*

1 ☐ Operated effectively
2 ☐ Insufficient G's
3 ☐ Improper installation
4 ☐ Battery dead
5 ☐ Battery corroded
6 ☐ Battery installation incorrect
7 ☐ Incorrect battery
8 ☐ Fire damage
9 ☐ Impact damage
10 ☐ Antenna broken/disconnected
11 ☐ Water submersion
12 ☐ Unit not armed
13 ☐ Shielded by wreckage
14 ☐ Shielded by terrain
15 ☐ Internal failure
16 ☐ Test satisfactorily after accident
17 ☐ Signal direction altered by terrain
18 ☐ Packing device still installed
19 ☐ Remote switch off
A Other

National Transportation Safety Board

FACTUAL REPORT
AVIATION

NTSB Accident/Incident Number

Supplement C--Wreckage Documentation, Multi-(3 or more) Reciprocating Engine and Turbine-Powered Aircraft (continued)

39 Flight Control System, Evidence of Operational Failure or Malfunction *(Multiple entry)*

1 ☐ None
2 ☐ Pitch Control
3 ☐ Roll control
4 ☐ Yaw control
A Specify _____
B Other

40 Aircraft STOL Modification Installed

1 ☐ Yes
2 ☐ No
A Other

Computed Weight and Balance Information— *Complete when weight and/or center of gravity limitations are exceeded. Otherwise, go to block 51.*

Takeoff

45 Weight	46 Center of Gravity	47 CG Range *(Multiple entry)*
_____ Lbs.	A _____ % MAC or B _____ Inches	1 ☐ At takeoff weight 2 ☐ At max gross weight A _____ % MAC to _____ MAC or B _____ Inches to _____ Inches

Accident

48 Weight	49 Center of Gravity	50 CG Range *(Multiple entry)*	51 Fuel On Board at Accident
_____ Lbs.	A _____ % MAC or B _____ Inches	1 ☐ At takeoff weight 2 ☐ At accident weight A _____ % MAC to _____ MAC or B _____ Inches to _____ Inches	1 ☐ Estimated 2 ☐ Verified A _____ Gallons B _____ Pounds C Other

uel Tanks	Fuel On Board at Accident			D Tank Construction				F Spillsafe Fittings			H Fuel Leakage/Rupture				
	A Gallons Estimated	B Gallons Verified	C Other	1 Wet Wing	2 Bladder	3 Metal	E Other	1 Yes	2 No	G Other	1 None	2 Line	3 Fitting	4 Tank	I Other
52 Left Wing															
53 Right Wing															
54 Left Tip															
55 Right Tip															
56 Fuselage															
57 *(Specify)* _____															

Engine/Propeller Historical Information

Engines	A Engine #1	B Engine #2	C Engine #3	D Engine #4	E Other
60 Serial Number					
61 Hours, Total					
62 Date, Last Overhaul *(Nos. for M, D, Y)*					
63 Hours, Since Last Overhaul					
64 Date, Last Inspection *(Nos. for M, D, Y)*					
65 Hours, Since Last Inspection					

National Transportation Safety Board

FACTUAL REPORT
AVIATION

NTSB Accident/Incident Number

Supplement G—Rotorcraft

1 Main Rotor Blade Type
1 ☐ Wood
2 ☐ Metal
3 ☐ Composite
A Other

2 Tail Rotor Blade Type
1 ☐ Wood
2 ☐ Metal
3 ☐ Composite
A Other

3 Auxiliary Fuel Tanks
1 ☐ None
2 ☐ Internal
3 ☐ External
A Other

4 IFR Certification
1 ☐ Single pilot
2 ☐ Dual Pilot IFR
3 ☐ None
A Other

5 Stability Augmentation System
1 ☐ Not installed
2 ☐ On
3 ☐ Off
4 ☐ On/off unknown
A Other

6 Engine Out Warning
1 ☐ Not installed
2 ☐ On
3 ☐ Off
4 ☐ On/off unknown
A Other

7 Low Rotor Speed Warning
1 ☐ Not installed
2 ☐ On
3 ☐ Off
4 ☐ On/off unknown
A Other

8 External Load Operations *(Multiple entry)*
1 ☐ Yes
2 ☐ No *(Go to block 16)*
3 ☐ Holds FAR 133 certificate
A Other

9 Type External Load Operation
1 ☐ Construction
☐ Aerial Application
3 ☐ Logging
4 ☐ Medevac
5 ☐ Aerial survey
A Specify _____
B Other

10 Long Line
1 ☐ Yes
2 ☐ No *(Go to block 13)*
A Other

11 Length of Long Line
_____ Feet
A Other

12 Load Cell/Computer Utilized
1 ☐ Yes
2 ☐ No
A Other

13 Weight of External Load
1 ☐ Estimated
2 ☐ Verified
A _____ Lbs
B Other

14 Load Jettisoned *(Multiple entry)*
1 ☐ External load
2 ☐ Long line
A Other

15 Landing Area *(Multiple entry)*
1 ☐ Level
2 ☐ Pinnacle
3 ☐ Confined area
A Slope _____ deg.
B Other

16 Obstructions
1 ☐ Trees
2 ☐ Wires/poles
3 ☐ Buildings/construction
4 ☐ Equipment/vehicles
5 ☐ Terrain
A Specify _____
B Other

17 Component Separation in Flight *(Multiple entry)*
1 ☐ None
2 ☐ General disintegration
3 ☐ Tailboom/cone
4 ☐ Stabilizer
5 ☐ Main rotor blade(s)
6 ☐ Main rotor hub assembly
7 ☐ Tail rotor blade(s)
8 ☐ Tail rotor hub assembly
9 ☐ Main transmission
10 ☐ Intermediate gear box
11 ☐ Tail rotor gear box
12 ☐ Vertical fin/pylon
13 ☐ Skids/Float(s)
14 ☐ Door(s)
A Other

18 Component Separation Postimpact *(Multiple entry)*
1 ☐ None
2 ☐ General disintegration
3 ☐ Tailboom/cone
4 ☐ Stabilizer
5 ☐ Main rotor blade(s)
6 ☐ Main rotor hub assembly
7 ☐ Tail rotor blade(s)
8 ☐ Tail rotor hub assembly
9 ☐ Main transmission
10 ☐ Intermediate gear box
11 ☐ Tail rotor gear box
12 ☐ Vertical fin/pylon
13 ☐ Skids/Float(s)
14 ☐ Door(s)
A Other

National Transportation Safety Board

FACTUAL REPORT
AVIATION

NTSB Accident/Incident Number

Supplement I—Crash Kinematics

1 Accident Site Geographic Coordinates—Latitude *(Multiple entry)*

1 ☐ North
2 ☐ South
A _____ deg. _____ minutes
B Other

2 Accident Site Geographic Coordinates—Longitude *(Multiple entry)*

1 ☐ East
2 ☐ West
A _____ deg. _____ minutes
B Other

3 Impact Sequence—*(Number in sequence. Multiple entry.)*

1 ☐	None	7 ☐	Ground	13 ☐	Trees/limbs 12" diam. and up	19 ☐	Runway light
2 ☐	Rock face	8 ☐	Dirt bank	14 ☐	Frangible approach aid	20 ☐	Water
3 ☐	Rigid structure	9 ☐	Scrub tree	15 ☐	Non-frangible approach aid	21 ☐	Wire
4 ☐	Rocks to 1' diam.	10 ☐	Trees/limbs to 6" diam.	16 ☐	Submerged obstacle	22 ☐	Pole
5 ☐	Rocks 1'-2' diam.	11 ☐	Trees/limbs 6"-9" diam.	17 ☐	Vehicle	23 ☐	Snow bank
6 ☐	Rocks > 2' diam.	12 ☐	Trees/limbs 9"-12" diam.	18 ☐	Aircraft	A	Other

4 Terrain at Principal Impact Point *(Multiple entry)*

1 ☐	None	6 ☐	Packed snow	11 ☐	Dry sod	16 ☐	Rock
2 ☐	Wet cultivated soil	7 ☐	Loose snow	12 ☐	Wet sod	17 ☐	Ice
3 ☐	Dry cultivated soil	8 ☐	Concrete	13 ☐	Water	18 ☐	Mud
4 ☐	Dry packed clay	9 ☐	Asphalt	14 ☐	Tundra	19 ☐	Sand
5 ☐	Boggy swampy	10 ☐	Loose rock	15 ☐	Dirt	A	Other

5 Airspeed At Impact *(Enter direct or mark estimated range)*

1 ☐	0-15	6 ☐	75-90	11 ☐	210 plus knots
2 ☐	15-30	7 ☐	90-120	A	_____ Knots
3 ☐	30-45	8 ☐	120-150	B	Other
4 ☐	45-60	9 ☐	150-180		
5 ☐	60-75	10 ☐	180-210		

6 Flight Path Angle *(Enter direct or mark estimated range)*

1 ☐	Up	6 ☐	15-20	11 ☐	60-90
2 ☐	Down	7 ☐	20-25	A	_____ Degrees
3 ☐	0-5	8 ☐	25-30	B	Other
4 ☐	5-10	9 ☐	30-45		
5 ☐	10-15	10 ☐	45-60		

7 Pitch Attitude At Impact *(Enter direct or mark estimated range.)*

Pitch Attitude

1 ☐ Down
2 ☐ Up
A _____ Deg.

Nose Down Angle With Horizon — Nose Up Angle With Horizon

☐ 75 ☐ 60 ☐ 45 ☐ 30 ☐ 15 ☐ 0 ☐ 15 ☐ 30 ☐ 45 ☐ 60 ☐ 75 ☐

90 ☐ 75 ☐ 60 ☐ 45 ☐ 30 ☐ 15 ☐ 0 ☐ 15 ☐ 30 ☐ 45 ☐ 60 ☐ 75 ☐ 90 ☐

B or Other

8 Roll Attitude At Impact *(Enter direct or mark estimated range.)*

Roll

1 ☐ Left
2 ☐ Right
A _____ Deg.

Aircraft Rolled Left — Aircraft Rolled Right

☐ 105 ☐ 120 ☐ 135 ☐ 150 ☐ 165 ☐ 180 ☐ 165 ☐ 150 ☐ 135 ☐ 120 ☐ 105 ☐

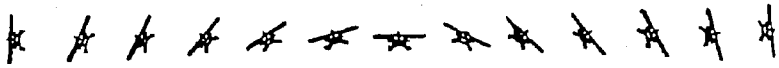

90 ☐ 75 ☐ 60 ☐ 45 ☐ 30 ☐ 15 ☐ 0 ☐ 15 ☐ 30 ☐ 45 ☐ 60 ☐ 75 ☐ 90 ☐

B or Other

National Transportation Safety Board

FACTUAL REPORT AVIATION

NTSB Accident/Incident Number

Supplement I—Crash Kinematics (continued)

9 Yaw Attitude at Impact *(Enter direct or mark estimated range.)*

1 ☐ Nose left
2 ☐ Nose right
A _____ Deg.

Aircraft Yawed Left: 90 ☐ 75 ☐ 60 ☐ 45 ☐ 30 ☐ 15 ☐ 0 ☐

Aircraft Yawed Right: 15 ☐ 30 ☐ 45 ☐ 60 ☐ 75 ☐ 90 ☐

or

B Other

10 Terrain Angle
1 ☐ Level
A Up _____ deg.
B Down _____ deg.
C Other

11 Principal Impact Ground Scar Length
1 ☐ None
A _____ feet
B Other

12 Principal Impact Ground Scar Depth
1 ☐ None
A _____ inches
B Other

13 Fuselage Totally Destroyed
1 ☐ Yes *(Go to block 36)*
2 ☐ No
A Other

14 Cockpit Damage *(Multiple entry)*
1 ☐ Destroyed
2 ☐ Collapsed
3 ☐ Part collapsed
4 ☐ Distorted
5 ☐ Burnt
6 ☐ Intact
7 ☐ None
A Other

15 FWD Cabin Damage *(Multiple entry)*
1 ☐ Destroyed
2 ☐ Collapsed
3 ☐ Part collapsed
4 ☐ Distorted
5 ☐ Burnt
6 ☐ Intact
7 ☐ None
A Other

16 AFT Cabin Damage *(Multiple entry)*
1 ☐ Destroyed
2 ☐ Collapsed
3 ☐ Part collapsed
4 ☐ Distorted
5 ☐ Burnt
6 ☐ Intact
7 ☐ None
A Other

17 Fuselage Split
☐ No *(Go to block 19)*
2 ☐ Longitudinal
3 ☐ Circumferential
A Other

18 Fuselage Split Behind Seat #
_____
A Other

19 Fuselage Collapse *(Estimated)*
1 ☐ None
A Horizontal _____ inches
B Vertical _____ inches
C Other

20 Fuselage Crush
1 ☐ None
A Horizontal _____ inches
B Vertical _____ inches
C Other

Exit Location	A Type of Exit				C Operable			E Fire Damage			G Impact Damage		
	1 Door	2 Window	3 Hatch	B Other	1 Yes	2 No	D Other	1 Yes	2 No	F Other	1 Yes	2 No	H Other
21 Cockpit-Left													
22 Cockpit Right													
23 1L													
24 1R													
25 2L													
26 2R													
27 3L													
28 3R													
29 4L													
30 4R													
5L													
32 5R													
33 6L													
34 6R													

National Transportation Safety Board

FACTUAL REPORT
AVIATION

NTSB Accident/Incident Number

Supplement I—Crash Kinematics (continued)

36 **Sketch of Crash Site**—*Show distribution of major components, fire area, obstacles struck, occupants, and magnetic north. Sketch is "NOT TO SCALE".*

Plan View

Elevation View

National Transportation Safety Board

FACTUAL REPORT
AVIATION

NTSB Accident/Incident Number

Supplement K—Occupant, Survival and Injury Information

1 Seat No.
A _____
B If Seat Unknown Enter Persons Name
_____
C Other

2 Position
1 ☐ Pilot in command
2 ☐ Second pilot
3 ☐ Other crewmember
4 ☐ Passenger
A Other

For non-survivable accident, go to block 36

3 Age
A _____ Yrs
B Under 24 mos., enter months _____
C Other

4 Height
_____ Inches
A Other

5 Weight
_____ Lbs
A Other

6 Injury Index
1 ☐ None
2 ☐ Minor
3 ☐ Serious
4 ☐ Fatal

7 Condition Prior to Accident *(Multiple entry)*
1 ☐ Smoker
2 ☐ Language difficulty
3 ☐ Pre-existing disease
4 ☐ Prothesis
A Other

8 Physically Handicapped *(Multiple entry)*
1 ☐ No
2 ☐ Blind
3 ☐ Mobility impaired
4 ☐ Deaf
A Other

9 Seat Belt Adjustment
1 ☐ Not fastened
2 ☐ Loose
3 ☐ Snug
4 ☐ Tight
5 ☐ Fastened-Tightness Unknown
6 ☐ Not seated
7 ☐ Seat not equipped
A Other

10 Shoulder Harness Adjustment
1 ☐ Not fastened
2 ☐ Loose
3 ☐ Snug
4 ☐ Tight
5 ☐ Fastened-Tightness Unknown
6 ☐ Seat not equipped
A Other

11 Knew Impact/Accident Coming
1 ☐ Yes
2 ☐ No
A Other

12 Braced for Impact
1 ☐ Yes
2 ☐ No
A Other

13 Direction of Movement at Impact *(Multiple entry)*
1 ☐ Forward
2 ☐ Rearward
3 ☐ Upward
4 ☐ Downward
5 ☐ Left
6 ☐ Right
A Other

14 Exit Used
1 ☐ Did not escape
2 ☐ Split in fuselage
A Exit number (use diagram)
_____
B Other

Exit Diagram

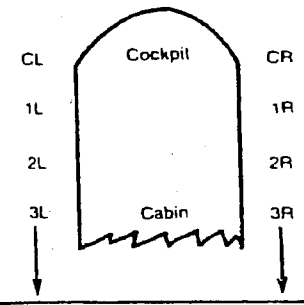

Use following codes for overhead hatches

Cockpit 99
Cabin 88
Tailcone 77

15 Escape Hampered by *(Multiple entry)*
1 ☐ Not hampered
2 ☐ Smoke
3 ☐ Heat
4 ☐ Injuries
5 ☐ Trapped
6 ☐ Darkness
7 ☐ Debris
8 ☐ Disorientation
9 ☐ Difficulty Using Exit
A Specify _____
B Other

16 Briefed on Emergency Procedures *(Multiple entry)*
1 ☐ No
2 ☐ Before takeoff
3 ☐ Before impact accident
A Other

17 Evacuation Aided by *(Multiple entry)*
1 ☐ Passenger
2 ☐ Crew
3 ☐ Bystander
4 ☐ CFR personnel
5 ☐ Unaided
A Other

18 Injured During Evacuation
1 ☐ Yes
2 ☐ No
A Other

Complete this section if oxygen was used.

21 Type of Equipment
1 ☐ Supplemental
2 ☐ Portable
A Other

22 Difficulty In Use
1 ☐ Yes
2 ☐ No
A Other

23 Type of Oxygen System
1 ☐ Solid state
2 ☐ Gaseous
A Specify _____
B Other

National Transportation Safety Board

FACTUAL REPORT
AVIATION

NTSB Accident/Incident Number

Supplement K—Occupant, Survival and Injury Information (continued)

Complete this section for accidents involving fire. 24 ☐ No fire involved *(Go to block 29)*

25 Fire First Sighted *(Location)*
1 ☐ Inside aircraft
2 ☐ Outside aircraft
3 ☐ Both
A Other

26 Smoke Mask/Goggles Used *(Multiple entry)*
1 ☐ No
2 ☐ Yes
3 ☐ Both
4 ☐ Difficulty in use
A Other

27 Material of Clothes Worn *(Multiple entry)*
1 ☐ Synthetic
2 ☐ Nonsynthetic
3 ☐ Fire resistant
4 ☐ Mix-synthetic and nonsynthetic
A Other

28 Exposure to Heat/Fire *(Multiple entry)*
1 ☐ Head/face
2 ☐ Arm(s)
3 ☐ Hand(s)
4 ☐ Leg(s)
5 ☐ Torso
6 ☐ Feet
A Other

Complete this section for accidents involving ditching/water impact. 29 ☐ No water impact *(Go to block 36)*

Flotation Devices	A Available			C Used			E Familiar With Use			G Problems In Use			I Malfunctioned With Use			K Equipment Damaged		
	1 Yes	2 No	B Other	1 Yes	2 No	D Other	1 Yes	2 No	F Other	1 Yes	2 No	H Other	1 Yes	2 No	J Other	1 Yes	2 No	L Other
30 Liferaft																		
31 Vest-Inflatable																		
32 Vest-Non-Inflatable																		
33 Cushion																		

34 Time in Water
A _____ Hrs.
B _____ Mins.
C Other

35 Rescued by
1 ☐ Boat
2 ☐ Airplane
3 ☐ Helicopter
4 ☐ None
A Other

Occupant Injuries—*Complete applicable parts for survivors and nonsurvivors.*

Items 36 thru 39 apply ONLY to flight crewmembers.

36 Medication Prescribed
1 ☐ No
A Yes *(Specify:* _____*)*
B Other

37 Medication Being Taken
1 ☐ No
A Yes *(Specify:* _____*)*
B Other

38 Medication/Drugs Found
1 ☐ No
A Yes *(Specify:* _____*)*
B Other

39 Pre-existing Disease Found at Autopsy
1 ☐ No autopsy performed
2 ☐ None reported
A Yes *Specify:* _____
B Other

Results of Toxicological Analyses—*Complete as applicable for survivors and nonsurvivors.*

40 Toxicology *(Multiple entry)*
1 ☐ Not ordered
2 ☐ Not ordered—performed
3 ☐ Ordered—performed
4 ☐ Ordered—not performed
5 ☐ Embalmed
6 ☐ Specimen not available/unsuitable for analysis
A Other

National Transportation Safety Board

FACTUAL REPORT
AVIATION

NTSB Accident/Incident Number

Supplement K—Occupant, Survival and Injury Information (continued)

Results of Toxicologial Analyses—*(Complete as applicable for survivors and nonsurvivors.) (continued)*

Substances	A Test Results: 1 Positive	2 Negative	B Other	C Level of Substances Found
41 Ethanol (Alcohol)				Mg %
42 CO (Carbon Monoxide)				% Saturation
43 hb (Hemoglobin)				gm %
44 HCN (Hydrogen Cyanide)				Microgram. ml
45 Acidic and Neutral Drugs				
46 Basic Drugs				
47 Marijuana				
48 (Specify) _____				

List any additional toxicological substances discovered below.

A Substance Code	B Level of Substances Found	A Substance Code	B Level of Substances Found
49		56	
50		57	
51		58	
52		59	
53		60	
54		61 (Specify)	
55		62 (Specify)	

Toxicological Substances/Codes

Acetaminophen	001	Cocaine	018	Imipramine	035	Menthol	052
Acetaldehyde	002	Codeine	019	Isopropanol	036	Morphine	053
Acetone	003	Desipramine	020	Ketamine	037	Medazepam	054
Amoxapine	004	Diazepam	021	Lidocaine	038	Nicotine	055
Amitriptyline	005	Dihydrocodeinone	022	Loxapine	047	Nortriptyline	056
Amobarbital	006	Diphenhydramine	023	Mecloqualone	039	Oxazepam	057
Amphetamine	007	Diphenylhydantoin	024	Meperidine	040	Pentazocine	058
Benzoylecgonine	008	Doxepin	025	Mephenitermine	041	Phenobarbital	059
Brompheniramine	009	Desalkylflurazepam	026	Meprobamate	042	Procaine	060
Butabital	010	Demoxapam	027	Methanol	043	Propoxyphene	061
Butabarbital	011	Ethchlorvynol	028	Methadone	044	Secobarbital	062
Caffeine	012	Flunitrazepam	029	Methamphetamine	045	Thioridazine	063
Cannabinoids	013	Flurazepam	030	Methaqualone	046	Temazepam	064
Chlorazepate	014	Fluphenazine	031	Methylenedioxyamphetamine	048	Nordiazepam	065
Chlordiazepoxide	015	Glutethimide	032	Phetamine	049	Pentobarbital	066
Chlorpheniramine	016	Haloperidol	033	Methylphendate	050	Phencyclidine	067
Clonazepam	017	Hexobarbital	034	Methyprylon	051	Phendimetrazine	068
						Prazepam	069

National Transportation Safety Board

FACTUAL REPORT
AVIATION

NTSB Accident/Incident Number

Supplement K—Occupant, Survival and Injury Information (continued)

63 ☐ *For multiple extreme traumatic injuries, check box, and go to next applicable supplement.*

Occupant Injury Coding Chart *(Complete for survivors and non survivors as applicable.)*

	A Body Region	B Aspect	C Lesion	D System/Organ	E AIS Severity	F 6 Injury Source	G 7 Source of Data
64							
65							
66							
67							
68							
69							
70							
71							
72							
73							

Body Region - A

01 Head (Skull, scalp, ears)
02 Face (Forehead, nose, eyes, mouth)
03 Neck (Cervical spine, C1-C7)
04 Shoulder (Clavicle, scapula, joint)
05 Upper limb (Whole arm)
06 Arm (Upper)
07 Elbow
08 Forearm
09 Wrist
10 Hand—fingers
11 Chest (Anterior and posterior ribs)
12 Abdomen (Diaphragm and below)
13 Back (Thoracsic spine T1-T12)
14 Back (Lumbar L1-L5)
15 Pelvis—hip
16 Lower limb (Whole leg)
17 Thigh (Femur)
18 Knee
19 Leg (Below knee)
20 Ankle
21 Foot—toes
22 Whole body
88 Injured, unknown region
99 Other

Aspect Of Injury - B

01 Right
02 Left
88 Injured aspect unknown
99 Other

Lesion - C

01 Laceration
02 Contusion
03 Abrasion
04 Fracture
05 Concussion
06 Avulsion
07 Rupture
08 Sprain
09 Dislocation
10 Crush
11 Amputation
12 Burn
13 Fracture and dislocation
14 Severence (Transection)
15 Strain
16 Detachment (Separation)
17 Perforation (Puncture)
88 Injured unknown lesion
99 Other

System/Organ - D

01 Skeletal
02 Vertebrae
03 Joints
04 Digestive
05 Liver
06 Nervous System
07 Brain
08 Spinal cord
09 Ears
10 Arteries veins
11 Heart
12 Spleen
13 Urogenital
14 Kidneys
15 Respiratory
16 Eye
17 Pulmonary/lungs
18 Airway
19 Muscles
20 Integumentary
21 Thyroid (Thyroid or other endocrine gland)
88 Injured, unknown system or organ
99 Other

Abbreviated Injury Scale - E

00 Not injured
01 Minor injury
02 Moderate injury
03 Serious injury (Not life-threatening)
04 Severe injury (Life-threatening survival probable)
05 Critical injury (Survival uncertain)
06 Maximum (untreatable)
07 Injured (Unknown severity)
88 Unknown if injured

Source of Data - G

Official

01 Autopsy records with or without hospital medical records
02 Hospital medical records
03 Emergency room records
04 Private or treating physicians

Unofficial

05 Lay coroner
06 E.M.S. personnel
07 Interviewee
08 Police
09 Other source

National Transportation Safety Board

FACTUAL REPORT
AVIATION

NTSB Accident/Incident Number

Supplement K—Occupant, Survival and Injury Information (continued)

Injury Source List - F

01 Windshield
02 Windshield frame
03 Window
04 Window frame
05 Instrument panel
06 Side console
07 Center console
08 Control stick/cyclic stick
09 Collective
10 Control yoke/column
11 Throttle quadrant/levers
12 Rudder pedals
13 Ceiling
14 Sidewall
15 Floor
16 Fuselage framing/structure
17 Table
18 Seat
19 Seatback tray
20 Restraints—seatbelt/tiedown
21 Restraints—shoulder harness
22 Unsecured item(s) in cockpit
23 Unsecured item(s) in cabin
24 Other occupants
25 Ground/runway
26 Unsecured seat(s)
27 Outside object(s) entering aircraft
28 Galley item(s)
29 Food/beverage item(s)
30 Other interior objects
31 Other exterior objects
32 Evacuation slide/slide raft
33 Escape rope/tape
34 Escape inertia device
35 Ejected from aircraft
36 Propeller/rotor blades
37 Exterior aircraft surface
38 Engine
39 Wheel/tires
40 Ground vehicle
41 Toxic/noxious/irritant fumes
42 Fire/radiant heat
43 Flying glass
44 Door/hatches
45 Acceleration forces
46 Exposure
47 Glare Shield
48 Eyeglasses
88 Unknown
99 Other

74 Death Due To Fire/Smoke

1 ☐ Yes
2 ☐ No
A Other

75 Death Due To Drowning

1 ☐ Yes
2 ☐ No
A Other

National Transportation Safety Board

FACTUAL REPORT
AVIATION

NTSB Accident/Incident Number

Supplement L—Seat, Restraint System and Fuselage Deformation

1 Seat Number
_____
A Other

2 Seat Manufacturing Standard
1 ☐ Type certificate *(Airframe manufacturer)*
2 ☐ Non-TSO
A TSO *(Specify)* _____
B Other

3 Seat Orientation
1 ☐ Forward facing
2 ☐ Rearward facing
3 ☐ Side facing
A Other

4 Seat Unit
1 ☐ Fixed
2 ☐ Adjustable
3 ☐ Swivel
A Other

5 Seat Type *(Multiple entry)*
1 ☐ Cockpit crew
2 ☐ Flight attendant single jumpseat
3 ☐ Flight attendant double jumpseat
4 ☐ Folding stowable
5 ☐ Single passenger seat
6 ☐ 2 passenger seat unit
7 ☐ 3 passenger seat unit
8 ☐ Sofa/Bench
A Other

6 Seat Location at Time of Examination
1 ☐ Inside aircraft-attached
2 ☐ Inside aircraft-separated
3 ☐ Outside aircraft
A Other

7 Total Seat Destruction *(Multiple entry)*
1 ☐ Impact *(Go to block 30)*
2 ☐ Fire *(Go to block 30)*
A Other

8 Seat Anchored
1 ☐ Bulkhead/wall
2 ☐ Floor
A Other

9 Seat Primary Structure
1 ☐ Tube
2 ☐ Sheet metal
3 ☐ Composite
4 ☐ Wood
5 ☐ Metal Castings
A Other

10 Energy Absorbing Features
1 ☐ Yes
2 ☐ No
A Other

11 Evidence of Fire/Heat Damage *(Multiple entry)*
1 ☐ None
2 ☐ Cushions/covers
3 ☐ Structure
4 ☐ Restraints
A Other

12 Seat Impact Damage
1 ☐ None *(Omit 15-28 type impact damage)*

13 Seat Displacement
1 ☐ None *(Omit 15-28 direction of seat displacement)*

Seat Component *(Complete only pertinent items)*	A Installed 1 No	2 Yes	3 Improper Installation	B Other	C Type Impact Damage *(Multiple entry)* 1 None	2 Bent	3 Distorted/Buckled	4 Collapsed	5 Partially Separated	6 Separated	D Other	E Direction of Seat Displacement *(Multiple entry)* 1 None	2 Forward	3 Rearward	4 Left	5 Right	6 Up	7 Down	F Other
15 Pedestal																			
16 Enclosure																			
17 Back Frame																			
18 Seat Pan																			
19 Pan Frame																			
20 Legs																			
21 Leg Attach Fittings																			
22 Seat Attach Fittings																			
23 Structural Attach Fittings, Floor																			
24 Structural Attach Fittings, Wall																			
25 Seat Track																			
26 Arm Rest																			
27 Seat Back Tray																			
28 Head Restraint																			

Restraint System Information

30 ☐ Totally Destroyed *(Go to block 46)*

Restraint System Manufacturer
_____
A Other

32 Restraint System TSO
1 ☐ Yes
2 ☐ No
A Other

33 Restraint System Design
1 ☐ 2-point
2 ☐ 3-point
3 ☐ 4-point
4 ☐ 5-point
A Other

34 Type Release/Buckle
1 ☐ Metal to metal
2 ☐ Fabric/pullthru
A Specify _____
B Other

National Transportation Safety Board

FACTUAL REPORT
AVIATION

NTSB Accident/Incident Number

Supplement L—Seat, Restraint System and Fuselage Deformation (continued)

Restraint System Design

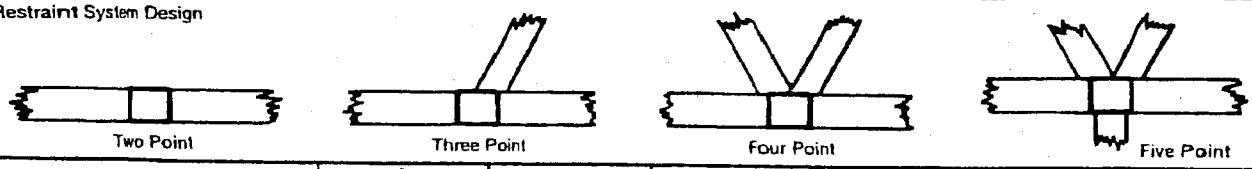

Component	A Installed			C Fire Damage			E Evidence of Use			G Location of Anchor Points					
	1 Yes	2 No	B Other	1 Yes	2 No	D Other	1 Yes	2 No	F Other	1 Seat	2 Wall	3 Floor	4 Ceiling	5 Bulkhead	H Other
35 Lapbelt															
36 Shoulder Harness															
37 Inertia Reel															
38 Tiedown Strap															

Component	A 1 No Damage	B Webbing/Stitching 1 Destroyed	2 Partially Separated	3 Separated	C Restraint Attach Fittings 1 No Damage	2 Destroyed	3 Bent	4 Partially Separated	5 Separated	D Seat/Structure Attach Fittings 1 No Damage	2 Destroyed	3 Bent	4 Partially Separated	5 Separated
39 Lapbelt														
40 Shoulder Harness														

41 Other Damage—Release Buckle
1 ☐ Yes
2 ☐ No
A Other

42 Other Damage—Tie Down Strap
1 ☐ Yes
2 ☐ No
A Other

43 Other Damage—Inertia Reel
1 ☐ Yes
2 ☐ No
A Other

46 Fuselage Collapse Around This Seat
1 ☐ None
2 ☐ Collapse
3 ☐ Disintegrated/Incinerated
A Other

47 Interior Surface Damage To This Seat
1 ☐ Yes
2 ☐ No
A Other

Cabin/Interior Deformation Around This Seat *(Select codes from list below)*	A Direction of Deformation 1 Forward	2 Rearward	3 Left	4 Right	5 Up	6 Down	B Other
50 Code _____							
51 Code _____							
52 Code _____							
53 Code _____							

48 Fuselage Collapse Measurements Around This Seat
(Enter inches on drawing)

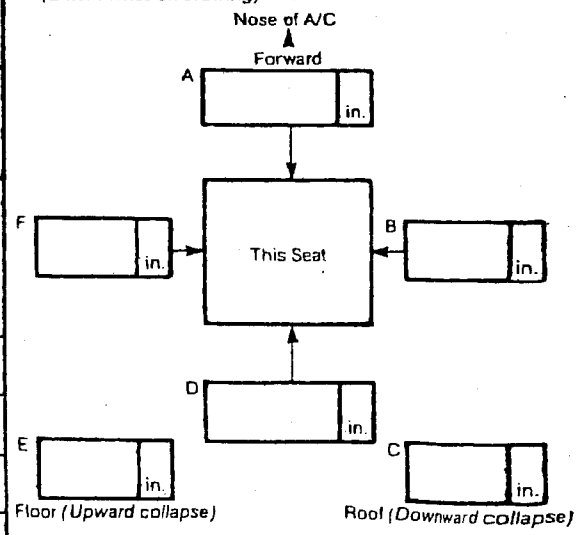

National Transportation Safety Board

FACTUAL REPORT
AVIATION

NTSB Accident/Incident Number

Supplement L—Seat, Restraint System and Fuselage Deformation (continued)

(Codes to be used in 50-53 above)

01 Windshield
02 Windshield frame
03 Window
04 Window frame
05 Instrument panel
06 Side console
07 Center console
08 Control stick/cyclic stick
09 Collective
10 Control yoke/column
11 Throttle quadrant/levers
12 Rudder pedals
13 Ceiling
14 Sidewall
15 Floor
16 Fuselage framing/structure
17 Table
18 Seat
19 Seatback tray
20 Restraints—seatbelt/tiedown
21 Restraints—shoulder harness
22 Unsecured item(s) in cockpit
23 Unsecured item(s) in cabin
24 Other occupants
25 Ground/runway
26 Unsecured seat(s)
27 Galley item(s)
28 Other interior objects
29 Door/hatches

National Transportation Safety Board

FACTUAL REPORT
AVIATION

NTSB Accident/Incident Number

Supplement N—Fire/Explosion

1 Fire Started

1 ☐ In-flight
2 ☐ During ground operation
3 ☐ During impact sequence
4 ☐ After aircraft came to rest
5 ☐ Greater than 1 minute after aircraft came to rest
A Other

Location of Initial Fire or Explosion *(Specify)*	A	B	C In-Flight			E On Ground			G After Impact		
	1 Fire	1 Explosion	1 Yes	2 No	D Other	1 Yes	2 No	F Other	1 Yes	2 No	H Other
2											
3											
4											

5 Fire/Explosion Ignition Source(s) *(Multiple entry)*

1 ☐ Engine
2 ☐ APU
3 ☐ Hot surface
4 ☐ Explosive
5 ☐ Aircraft system
6 ☐ Cargo
7 ☐ Short circuit
8 ☐ Static electricity
9 ☐ Lightning
10 ☐ Sparks *(Friction, skidding, etc.)*
11 ☐ Ground vehicle
12 ☐ Ground structure
13 ☐ Aircraft occupant
A Other

6 Fluid Spilled

1 ☐ Yes
2 ☐ No *(Go to block 8)*
A Other

7 Type of Fluid Spilled *(Multiple entry)*

1 ☐ Fuel
2 ☐ Oil
3 ☐ Hydraulic
A Other

8 Other Fuels Present *(Multiple entry)*

1 ☐ Natural gas
2 ☐ Heating oil
3 ☐ Gasoline
4 ☐ Kerosene
5 ☐ Explosives
6 ☐ None
A Other

9 Fire Propagation Direction *(Multiple entry)*

1 ☐ Forward
2 ☐ Rearward
3 ☐ Upward
4 ☐ Downward
5 ☐ Left to right
6 ☐ Right to left
A Other

10 Percent of Occupiable Space in Fire Area at Time of Evacuation

_____ Percent
A Other

11 Ground Structure Burned *(Multiple entry)*

1 ☐ Single family house
2 ☐ Multifamily house
3 ☐ Commercial building
4 ☐ Farm building
5 ☐ Trees
6 ☐ Vehicle
7 ☐ Other aircraft
8 ☐ None
A Other

12 Fire Sensing and Extinguishing Systems Installed/Available

1 ☐ Yes
2 ☐ No *(Omit blocks 13-34)*
3 ☐ Not pertinent to accident *(Omit blocks 13-34)*
A Other

	Sensors							Extinguishers							
	A Available			C Type of Sensor				E Available			G Number		I Type of Extinguisher		
	1 Yes	2 No	B Other	1 Heat	2 Smoke	3 Optic	D Other	1 Yes	2 No	F Other	1 Number	H Other	1 Manual	2 Automatic	J Other
13 Engine #1															
14 Engine #2															
15 Engine #3															
16 Engine #4															
17 APU															

National Transportation Safety Board

FACTUAL REPORT
AVIATION

NTSB Accident/Incident Number

Supplement N—Fire/Explosion (continued)

	Sensors							Extinguishers							
	A Available			C Type of Sensor				E Available			G Number		I Type of Extinguisher		
	1 Yes	2 No	B Other	1 Heat	2 Smoke	3 Optic	D Other	1 Yes	2 No	F Other	1 Number	H Other	1 Manual	2 Automatic	J Other
20 Galley															
21 Lavatory															
22 Heater															
23 Battery															
24 Electrical System															
25 *Specify* _____															
26 *Specify* _____															
27 *Specify* _____															

	Engine #1 1	Engine #2 2	Engine #3 3	Engine #4 4	APU 5	Cabin 6	Cargo 7	Galley 8	Lavatory 9	Heater 10	Battery 11	Electrical Sys. 12	Other A
28 Activated													
29 Did Not Activate													

	Engine #1 A	Engine #2 B	Engine #3 C	Engine #4 D	APU E	Cabin F	Cargo G	Galley H	Lavatory I	Heater J	Battery K	Electrical Sys. L	Other M
Number Activated 30 Man													
Number Activated 31 Auto													
# Did Not Activate 32 Man													
# Did Not Activate 33 Auto													

34 Extinguisher Systems/Agents Used *(Multiple entry)*

1 ☐ Fixed equipment
2 ☐ Portable equipment
3 ☐ CO_2 (Carbon Dioxide)
4 ☐ CB (Chlorobroyethane)
5 ☐ Halon 1211
6 ☐ ME (Methylbromide)
7 ☐ Halon 1301
A Other

TECHNICAL REPORT OF U.S. ARMY AIRCRAFT ACCIDENT
PART VII - IN-FLIGHT OR TERRAIN IMPACT AND CRASH DAMAGE DATA

For use of this form, see AR 385-40 and DA Pamphlet 385-40; the proponent agency is OCSA

REQUIREMENTS CONTROL SYMBOL
CSOCS-309

1. IN-FLIGHT COLLISION KINEMATICS AT INSTANT OF IMPACT

a. Airspeed At Impact *(knots)*

b. Vertical Speed *(feet per minute)* _____
☐ Up ☐ Down

c. Flight Path Angle *(degrees)* _____
☐ Up ☐ Down

d. In-Flight Attitude At Impact

(1) Pitch Angle

(2) Roll Angle

Degrees _____ ☐ Up ☐ Down

Degrees _____ ☐ Left ☐ Right

e. Obstacle Identity And Collision Height

Obstacle	Collision Height Above Ground *(feet)*
(1) ☐ Birds	
(2) ☐ Aircraft	
(3) ☐ Wires/Cables	
(4) ☐ Vehicles	
(5) ☐ Tree	
(6) ☐ Other	

f. Obstacle Strike Sequence *(Enter 1, 2, 3, etc. to show sequence of*

____ Prop/Rotor	____ Landing Gear
____ Rotor Mast	____ Wing
____ Tail Rotor	____ Empennage
____ Tail Boom	____ WSPS
____ Windscreen	____ FLIR
____ LWR Nose/Gun Turret	____ Other *(Specify)*

g. Obstacle Conspicuity *(Within accident distance from pilot's position, the obstacle in its surroundings was obscured)*

(1) ☐ Completely (2) ☐ Partially (3) ☐ Not Obscured

h. Wire or Cable Description

Type	Dia In Inches	No. Struck
(1) Power Transmission		
(2) Telephone or TV		
(3) Bracing *(guy/support)*		
(4) Other *(Specify)*		

i. WSPS (1) Installed ☐ Yes ☐ No (2) Cut Wire ☐ Yes ☐ No

j. Obstacle Struck Other Than Wire *(diameter in inches)*

2. TERRAIN COLLISION KINEMATICS AT INSTANT OF MAJOR IMPACT

a. Ground Speed at Impact _____ *(knots)*

b. Vertical Speed
☐ Up ☐ Down _____ *(FPM)*

c. Flight Path Angle
☐ Up ☐ Down _____ *(degrees)*

d. Indicate by Check Marks Which Two of The Three Preceding Parameters *(a, b, c)* Are The Most Accurate

a. ☐ b. ☐ c. ☐

e. Impact Angle _____ *(degrees)*

f. Attitude at Major Impact

(1) Pitch

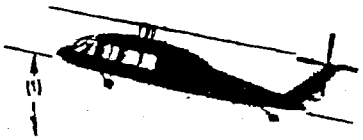

(2) Roll

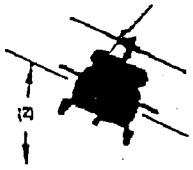

(3) Yaw

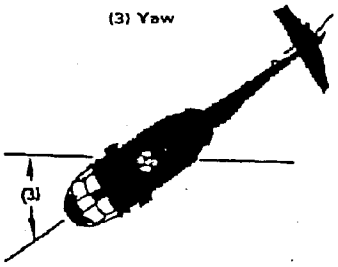

Degrees _____ ☐ Up ☐ Down

Degrees _____ ☐ Left ☐ Right

Degrees _____ ☐ Left ☐ Right

3. ROTATION AFTER MAJOR IMPACT

a. Did Aircraft Rotate About Any Axis After The Above Major Impact *(If yes, complete items b, c, and d)*
☐ Yes ☐ No ☐ Unknown

b. Roll Degrees
☐ Left ☐ Right Degrees _____

c. Yaw Degrees
☐ Left ☐ Right Degrees _____

d. Pitch Degrees
☐ Up ☐ Down Degrees _____

4. IMPACT FORCES RELATIVE TO AIRCRAFT AXES *(G's)*

a. Vertical *(G's)*
☐ Up ☐ Down G's _____

b. Longitudinal *(G's)*
☐ Fore ☐ Aft G's _____

c. Lateral *(G's)*
☐ Left ☐ Right G's _____

5. CASE NO.	a. Date *(YYMMDD)*	b. Time	c. Acft Serial No.	6. OTHER ACFT SERIAL NO.

DA FORM 2397-6-R, JUL 94

USAPC V1.00

FUSELAGE INWARD DEFORMATION OR COLLAPSE AND INJURY RELATIONSHIP *(Check appropriate boxes)*

Fuselage Area	Amount or Type of Deformation or Collapse	Specific Area of Deformation or Collapse				Fuselage Deformation Produced/Contributed to Injury			
		Cockpit (1)	Forward Cabin Area (2)	Mid Cabin Area (3)	Rear Cabin Area (4)	Cockpit (5)	Forward Cabin Area (6)	Mid Cabin Area (7)	Rear Cabin Area (8)
a. Roof	Up to 1 Foot								
	More Than 1 Foot But Less Than 3 Feet								
	More Than 3 Feet Foot								
b. Left Side	Up to 1 Foot								
	More Than 1 Foot								
c. Right Side	Up to 1 Foot								
	More Than 1 Foot								
d. Nose	Up to 1 Foot								
	More Than 1 Foot								
e. Floor	Up to 1 Foot								
	More Than 1 Foot								
f. Floor *(local deformation under seats)*	Vertical								
	Sideward								
	Forward/Rearward								

8. LARGE COMPONENT DISPLACEMENT *(Check appropriate boxes)*

Component	Displaced (1)	Torn Free (2)	Cockpit Penetrated/Entered (3)	Cabin Penetrated/Entered (4)
a. Transmission *(forward or main)*				
b. Transmission *(rear)*				
c. Rotor Blade *(forward or main)*				
d. Rotor Blade *(rear or tail)*				
e. Landing Gear *(specify location)*				
f. Other *(specify)*				

9. POSTCRASH FLAMMABLE FLUID SPILLAGE

Equipped With Crashworthy Fuel System ☐ Yes ☐ No

b. If So Equipped, Did Breakaway Valves Separate as Designed ☐ Yes ☐ No ☐ NA

c. Flammable Fluid Spillage Occurred ☐ Yes ☐ No

d. Auxiliary Fuel Tanks Installed ☐ Yes ☐ No ☐ Internal ☐ External Crashworthy ☐ Yes ☐ No

e. Amount and Type Fluid Spilled

Gallons	Fuel *(Type)*	Oil *(Type)*	Hyd Fluid *(Type)*	Other *(Specify)*
0 - 1				
> 1 - 2				
> 2 - 10				
> 10 - 20				
> 20				

10. SPILLAGE SOURCE

Part	a. Part Name/Nomenclature	b. Part Number	c. National Stock No.
(1) Cell/Tank/Reservoir			
(2) Filter			
(3) Fitting			
(4) Fluid Line			
(5) Value			
(6) Breakaway Valve			
(7) Other *(Specify)*			
(8) Other *(Specify)*			
(9) Other *(Specify)*			

11. REMARKS

TECHNICAL REPORT OF U.S. ARMY AIRCRAFT ACCIDENT

PART X - INJURY/OCCUPATIONAL ILLNESS DATA

For use of this form, see AR 385-40 and DA Pamphlet 385-40; the proponent agency is OCSA

REQUIREMENTS CONTROL SYMBOL CSOCS-309

1. DEGREE OF INJURY *(Check only the most severe injury)*

a. ☐ Fatal
b. ☐ Permanent Total Disability
c. ☐ Permanent Partial Disability
d. ☐ Lost Workday *(Days away from work)*
e. ☐ Workday of Restricted Activity
f. ☐ No Lost Workday or Restricted Activity
g. ☐ First Aid Only
h. ☐ Missing and Presumed Dead

2. NUMBER OF LOST WORKDAYS	a. Days Away From Work	b. Days Hospitalized	c. Days of Restricted Activity

3. UNCONSCIOUS	Hrs	Min	☐ None	4. AMNESIA	Hrs	Min	☐ None

5. INJURIES

Seq No. a.	Body Region b.	Primary Aspect c.	Secondary Aspect d.	Inj Type/Result e.	Abbreviated Injury Scale f.	Mechanism: Action g.	Mechanism: Qualifier h.	Cause Factors: Subject i.	Cause Factors: Action j.	Cause Factors: Qualifier k.

6. REMARKS *(Use additional sheet if required)*

7. AUTOPSY PERFORMED	a. ☐ Yes b. ☐ No	8. CAUSE OF DEATH	9. DUTY STATUS	a. ☐ On Duty b. ☐ Off Duty

10. NAME *(Last, First, MI)*	11. SSN	12. GRADE	13. SEX	14. DUTY	15. SVC	16. UIC

17. CASE NO.	a. Date *(YYMMDD)*	b. Time	c. Acft Serial No.	18. OTHER ACFT SERIAL NO.	19. INJURY COST

DA FORM 2397-9-R, JUL 94

USAPC V1.00

TECHNICAL REPORT OF U.S. ARMY AIRCRAFT ACCIDENT
PART XI - PERSONNEL PROTECTIVE/ESCAPE/SURVIVAL/RESCUE DATA

For use of this form, see AR 385-40 and DA Pamphlet 385-40; the proponent agency is OCSA

REQUIREMENTS CONTROL SYMBOL
CSOCS-309

1. DID THIS INDIVIDUAL SUSTAIN AN INJURY OR OCCUPATIONAL ILLNESS BECAUSE OF ACCIDENT? ☐ Yes ☐ No
(NOTE: If "yes" box is checked, ensure a DA Form 2397-9-R is completed for this individual)

2. PERSONNEL PROTECTIVE/RESTRAINT/SURVIVAL EQUIPMENT

Item	Type (1)	Required (2)	Available (3)	Used (4)	Produced Injury (5)	Allowed Injury (6)	Prevented Injury (7)	Reduced Injury (8)	Functioned as Designed (9)	Information Codes (10)			
a. Helmet													
b. Visor													
c. Glasses													
d. Flight Suit													
e. Flight Gloves													
f. Flight Jacket													
g. Boots													
h. Other Clothing													
i. Lap Belt													
j. Shoulder Harness													
k. Gunner Harness													
l. Inertia Reel													
m. Seat/Litter													
n. Survival Equipment													
o.													
p.													

3. PERSONNEL EVACUATION/ESCAPE

	Information Codes			
a. Method of Escape				
b. Location in Aircraft				
c. Exit Attempted				
d. Exit Used				
e. Aircraft Attitude During Escape				
f. Cockpit/Cabin Conditions				
g. Escape Difficulties				

4. LAPSED TIME FOR RESCUE

	Date		Hour of Day		Lapsed Time	
	MM	DD	HR	MIN	HR	MIN
a. Notification of Rescue Personnel						
b. Individual Physically Reached						
c. Individual Actually Aboard Rescue Vehicle						
d. Rescue Completed/Abandoned						

5. DISTANCE FROM ACCIDENT TO ACTUAL RESCUE VEHICLE AT TIME OF ACCIDENT

a. To Aircraft in Nautical Miles

b. To Ground Vehicle in Statute Miles

6. PERSONNEL SURVIVAL/RESCUE

	Information Codes								
a. Survival Problems Encountered									
b. Means Used to Locate Individual									
c. Rescue Equipment Used									
d. Factors That Helped Rescue									
e. Factors Complicating Rescue									
f. Individual Physical Condition									
g. Vehicles Actually Performing Evacuation *(Specify)*									
h. Other Vehicles Assisting in Rescue *(Specify)*									

7. REMARKS *(Use additional sheet if required)*

8. NAME *(Last, First, MI)*	9. SSN	10. GRADE	11. SEX	12. DUTY	13. SVC	14. UIC

15. CASE NO.	a. DATE *(YYMMDD)*	b. Time	c. Acft Serial No.	16. OTHER ACFT SERIAL NO.

DA FORM 2397-10-R, JUL 94

USAPPC V1.00

TECHNICAL REPORT OF U.S. ARMY AIRCRAFT ACCIDENT

PART XIII - FIRE DATA *(To be completed for all events involving fire)*

For use of this form, see AR 385-40 and DA Pamphlet 385-40, the proponent agency is OCSA

REQUIREMENTS CONTROL SYMBOL
CSOCS-309

1. FIRE STARTED *(Check D - Definite S - Suspected)*	D	S
a. Inflight		
b. Upon Impact *(Less than 1 minute)*		
c. Upon Impact *(More than 1 minute)*		
d. During Refueling		
e. Other *(Specify)*		
f. Undetermined		

2. INDICATIONS OF FIRE
(More than one may apply. Enter 1, 2, or 3 to show sequence)

a. ☐ Fire Warning System d. ☐ Smell g. ☐ Other *(Specify)*
b. ☐ Other Instruments e. ☐ Explosion *(Sound)*
c. ☐ Sight f. ☐ External Commo

3. INITIAL AND PRINCIPAL LOCATION OF FIRE *(Enter 1 to indicate initial location, 2 to indicate principal location)*	D	S
a. Engine Section		
b. Transmission Section		
c. Cockpit		
d. Tail Assembly		
e. Passenger Section		
f. Baggage Compartment		
g. External Stores		
h. Ammunition Stores		
i. Avionic Section		
j. APU		
k. Wheel Well		
l. Wheel Brake		
m. Tail Pipe		
n. Instrument Panel		
o. Battery Compartment		
p. Heater Compartment		
q. Fuel Cell *(Specify)*		
r. Wing		
s. Gun Turret		
t. Tail Boom		
u. Cargo Section		
v. Tires		
w. Other *(Specify)*		
x. Undetermined		

4. IGNITION SOURCE	D	S
a. Exhaust Flames		
b. Sparks, Friction, e.g., Skidding		
c. Electrical Sparks		
d. Hot Surfaces, e.g., Exhaust Ducts		
e. Aircraft Subsystem		
f. Aircraft Occupant, e.g., Lighted Cigar		
g. External of Aircraft, e.g., Grass Fire		
h. Cargo		
i. Explosives		
j. Short Circuit		
k. Lightning		

4. IGNITION SOURCE *(Continued)*	D	S
l. Static Electricity		
m. Other *(Specify)*		
n. Undetermined		

5. COMBUSTIBLE MATERIAL	D	S
a. Main Fuel		
b. Auxiliary Fuel		
c. Hydraulic Fluid		
d. Engine Oil		
e. Transmission Oil		
f. Electrical Insulation		
g. Acoustical Materials		
h. Metal *(Specify)*		
i. Explosives		
j. Upholstery Materials		
k. Cargo		
m. External Material *(Specify)*		
n. Other *(Specify)*		
o. Undetermined		

6. FIRE EXTINGUISHING SYSTEM	a. Gnd	b. Aircraft Inst	b. Aircraft Port
(1) No Effect When Discharged			
(2) Activated, But Did Not Discharge			
(3) Reduced Fire			
(4) Extinguished Fire			
(5) Not Activated And Not Near Fire			
(6) Not Activated, But Near Fire			
(7) Not Installed			

7. FIRE SMOKE DETECTION SYSTEM	Yes	No	Undet
a. System Installed			
b. Warning System Operated Properly			
c. Sensors Within Range of Smoke/Fire			

8. EFFECT OF EMER SHUTOFF PROCEDURE *(Enter D, S, or U)*	Eng	Fuel	Elect
a. Extinguished Flame			
b. Reduced Fire			
c. No Effects			
d. Not Accomplished			
e. Used Faulty Procedure			

9. GENERAL DATA

a. Est of Aircraft Fire Damage *(Excl of impact damage)*
☐ 0-25% ☐ 26-50% ☐ 51-75% ☐ 76-100%

b. Fire Dimension: To Clear Fire, Aircraft Occupants Had To Move *(feet)*:

c. Toxicity: Was There Evidence of Toxic Products?
☐ Yes ☐ No

d. Distance To Nearest Available Military Firefighting Equipment
(1) Air Miles *(NM)*: (2) Road Miles *(SM)*:

e. G-Force Activated Fire Extinguishing System Functioned As Designed
☐ Yes ☐ No ☐ NA

10. REMARKS *(Use additional sheet if required)*

11. CASE NO.	a. Date *(YYMMDD)*	b. Time	c. Acft Serial No.	12. OTHER ARCFT SERIAL NO.

DA FORM 2397-12-R, JUL 94

USAPPC V1.00

APPENDIX B—AC 29-2B ORIGINAL ADVISORY CIRCULAR

U.S. Department of Transportation
Federal Aviation Administration

Advisory Circular

Subject:	CERTIFICATION OF TRANSPORT CATEGORY ROTORCRAFT	**Date:**	7/30/97	**AC No:**	29-2B
		Initiated by:	ASW-110	**Change:**	

1. PURPOSE:

a. This is a total revision of AC 29-2A dated 9/16/87, with changes 1, 2, and 3, dated 4/24/89, 9/24/91, and 6/1/95 respectively, incorporated. In addition, new material plus changes to existing paragraphs have been incorporated. This consolidated version is now renumbered as AC 29-2B and replaces AC 29-2A in its entirety. This revises existing material in 25 paragraphs and adds new material for 33 paragraphs.

b. b. This AC does not change regulatory requirements and does not authorize changes in, or deviations from regulatory requirements. This AC establishes an acceptable means, but not the only means of compliance. Since the guidance material presented in this AC is not regulatory, terms having a mandatory definition, such as "shall" and "must," etc., as used in this AC, apply either to the reiteration of a regulation itself, or to an applicant who chooses to follow a prescribed method of compliance without deviation.

c. This advisory circular provides information on methods of compliance with 14 CFR Part 29, which contains the Airworthiness Standards for Transport Category Rotorcraft. It includes methods of compliance in the areas of basic design, ground tests, and flight tests.

2. CANCELLATION. AC 29-2A, Certification of Transport Category Rotorcraft, September 16, 1987, is canceled in its entirety.

3. BACKGROUND. Based largely on precedents set during rotorcraft certification programs spanning the past 39 years, this AC consolidates guidance contained in earlier correspondence among FAA headquarters, foreign authorities, the rotorcraft industry, and certificating regions.

4. PRINCIPAL CHANGES:

a. Paragraphs 31A, 32, 45, 47, 55, 57, 64, 69, 71, 72, 140A, 245, 337, 596, 618, 619, 621, 633, 641, 652, 653, 726, 765, 775, and 777 are revised to incorporate technical guidance.

b. New paragraphs 42A, 55B, 56, 57A, 58A, 59, 60A, 66A, 67A, 70A, 71A, 72A, 140B, 152A, 205A, 218B, 252A, 254, 329B, 359A, 397B, 398C, 421A, 423C, 447, 454B, 456A, 459A, 460B, 563B, 619B, 619C, 724B, and 765A are added to Chapter 2.

c. New paragraph 781A is added to Chapter 3.

d. Paragraph 447, § 29.951, General, is renumbered to Paragraph 446. Paragraph 447 now addresses § 29.952, Fuel Systems Crash Resistance.

Following is Paragraph 447, Sub-section FAR 29.952 Fuel System Crash Resistance, from Section 26 FUEL SYSTEM, of AC 29-2B dated July 30, 1997.

447. § 29.952 (Amendment 29-35) FUEL SYSTEM CRASH RESISTANCE.

a. Explanation.

(1) Section 29.952 provides safety standards that minimize postcrash fire (PCF) in a survivable impact. The rule contains comprehensive crash resistant fuel system (CRFS) design and test criteria that significantly minimize fuel leaks, creation of potential ignition sources, and the occurrence of PCF. Section 29.952 accomplishes this for survivable impacts by-

(i) Providing comprehensive criteria to minimize fuel leaks and potential ignition sources;

(ii) Requiring increased crash load factors for fuel cells in and behind occupied areas to ensure the static, ultimate strength necessary for impact energy absorption, structural integrity, fuel containment, and occupant safety;

(iii) Maintaining the load factors of § 29.561 for fuel cells in other areas (particularly underfloor cells) to ensure leak-tight fuel cell deformation in energy absorbing underfloor structure without unduly crushing or penetrating the occupiable volume; and

(iv) Requiring a 50 ft. dynamic vertical impact (drop) test to measure fuel tank structural and fuel containment integrity.

(2) Section 29.952 applies to all fuel systems (including auxiliary propulsion unit (APU) systems).

(3) Some similarities exist among the fire protection requirements of §§ 29.863, 29.1337(a)(2), and 29.952. The requirements in each standard are not mutually exclusive. Overlapping requirements should be certified simultaneously.

(4) The use of bladders is not mandated as this would unduly dictate design. However, in the majority of cases, their use is necessary to meet the test requirements of § 29.952. If a design does not use bladders, the application should be treated as a new and unusual design feature that should be thoroughly coordinated with the Airworthiness Authority for technical policy to insure adequate safety. Experience has shown that bladders with wall thicknesses from 0.03 to 0.018 inches typically meet the § 29.952 test requirements.

b. Related Material. Documents shown below may be obtained from The Naval Publications and Forms Center, 5801 Tabor Avenue, Philadelphia, Pennsylvania 19120-5094, ATTN: Customer Service (NPODS).

(1) Military Specification, MIL-T-27422B, Amendment 1, April 13, 1971, Tank, Fuel, Crash-resistant Aircraft.

(2) Military Standard, MIL-STD-1290 (AV), January 25, 1974, Light Fixed and Rotary Wing Aircraft Crashworthiness.

(3) Military Standard, MIL-H-83796, August 1, 1974, Hose Assembly, Rubber, Lightweight, Medium Pressure, General Specification for.

(4) Military Specification, MIL-V-27393 (USAF), July 12, 1960, Valve, Safety, Fuel Cell Fitting, Crash Resistant, General Specification, for.

(5) Military Specification, MIL-H-25579 (USAF).

(6) Military Specification, MIL-H-38360.

(7) U.S. Army Publication USARTL-TR-79-22E, "Aircraft Crash Survival Design Guide, Volume V---Aircraft Postcrash Survival", dated January 1989.

NOTE: Section 4, "Postcrash Fire Protection" of Volume V of the Design Guide is the modern update to MIL-STD-1290. Section 4 contains a comprehensive design guide for military CRFS designs that may be useful for civil CRFS designs.

c. Conceptual Definitions.

(1) Survivable Impact. An impact (crash) where human tolerance acceleration limits are not exceeded in any of the principal rotorcraft axes, where the structure and structural volume surrounding occupants are sufficiently intact during and after impact to constitute a livable volume and permit survival, and where an item of mass does not become unrestrained and create an occupant hazard. "Livable volume" relates to the ability of an airframe to maintain a protective shell around occupants during a crash and to minimize threats, such as accelerations, applied to the occupiable portion of the aircraft during otherwise survivable impacts. In lieu of a more rational, approved criteria, the load factors of § 29.952(b)(1) constitute the structural human survivability accelerations limits.

(2) Postcrash Fire (PCF). A fire occurring immediately after and as a direct result of an impact. The fire is either the result of fuel released from a leaking fuel system reaching an existing or a crash-induced ignition source, a crash-induced ignition source internal to an undamaged or damaged fuel system, or a combination. PCF's have an intensity range from the minimum of a small local flame to the maximum of an instantaneous massive fire or fireball (explosion).

(3) Fuel Tank or Cell. A reservoir that contains fuel and may consist of a hard shell (of a composite, metal, or hybrid construction) with either a laced-in, snapped in, or otherwise attached semirigid or flexible rubber matrix bladder (or liner), spray-on bladder, or no bladder. The hard shell may be either the airframe (integral tank) or a separate rigid tank attached to the airframe. The device has inlets and outlets for fuel transfer and internal pressure control.

(4) Ignition Source. An ignition source that when wet with fuel or in contact with fuel vapor would cause a PCF.

(5) Major Fuel System Component. A fuel system part with enough mass, installation location hazard or a combination to be structurally considered in a crash. Structural consideration is required when crash-induced relative motion can occur

between the part and its surrounding structure from inertial impact forces, airframe deformation forces, or for other reasons.

(6) Drip Fence. A physical barrier that interrupts liquid flow on the underside of a surface, such as a fuel cell, and allows it to drip nonhazardously to an external drain.

(7) Flow Diverter. A physical barrier that interrupts or diverts the flow of a liquid.

(8) Frangible Attachment or Fitting. An attachment or fitting containing a part that is designed and constructed to fail at a predetermined location and load.

(9) Deformable Attachment or Fitting. An attachment or fitting containing a part that is designed and constructed to deform at a predetermined location and load to a predetermined final configuration.

(10) Self-Sealing Breakaway Fuel Fitting. A fuel-carrying in-line, line-to-firewall, bulkhead or line-to-tank connection that breaks in half and self-seals when subjected to forces greater than or equal to the unit's design breakaway force. Each half self-seals using a spring-loaded valve (e.g., trap door or equivalent means) that is normally open but is released and closed upon fitting separation. Fitting breakaway force is typically controlled by a frangible metal ring (or series of circumferential tabs) that connects the two fitting halves. Normal, fuel-tight integrity is maintained by "O" rings held under pressure by the rigid, frangible connecting ring (or tabs). When broken open, a small amount of fuel (usually less than 8 ounces) is released. This is the fuel trapped in the coupling space between the two spring-loaded valves. Once failed each coupling half may leak slightly. Typically, this leak rate should be less than 5 drops per minute per coupling half.

(11) Crash Resistant Flexible Fuel Cell Bladder. Flexible, rubberized material, usually with fibers (i.e., rubber "resin" and natural or synthetic fiber) in both the 0° (warp) and 90° (fill) directions that is used as a liner in a rigid shell or integral tank. The material acts as a membrane because, when unsupported, it can only carry pure tension loads. Therefore, it must be uniformly supported by rigid structure (reference § 29.967) so that the liner carries only compressive fluid loads and the surrounding shell structure carries the fluid-induced shear, tension, and bending loads transmitted through the liner or bladder. The material is usually secured (e.g., laced, snapped, etc.) into its surrounding structure at key locations to maintain its intended conformal shape. In many designs, lightweight spacers, such as structural foam, are used between the liner and the airframe to maintain the liners intended conformal shape and to transmit fluid loads to the airframe. The material is either qualified under TSO-C80, "Flexible Fuel and Oil Cell Material," or qualified during certification. Sections 29.952 and 29.963(b) have increased the minimum puncture resistance qualification requirement for liner material (See TSO-C80, Paragraph 16.0) from 15 to 370 pounds.

(12) Crash Resistant Fuel System (CRFS). A fuel system designed and approved in accordance with § 29.952 that either prevents a PCF or delays the start of a severe PCF long enough to allow escape.

(13) As Far as Practicable. "As Far as Practicable" means that within the major constraints of the applicant's design (e.g., aerodynamic shape, space, volume, major structural relocation, etc.), this standard's criteria should be met. The level of practicability is much higher in a new design project than in a modification project. The engineering decisions, evaluations, and trade studies that determine the maximum level of practicability should be documented and approved.

(14) Fireproof. Defined in § 1.1, "General Definitions" and in AC 20-135, "Powerplant Installation and Propulsion System Component Fire Protection Test Methods, Standards and Criteria" dated February 6, 1990.

d. Procedures.

(1) Section 29.952 should be applied to all fuel system installations. Any major design change should be reevaluated for compliance with the CRFS requirements. It should be noted that most standard materials and processes are acceptable for crash resistant fuel system construction; however, magnesium, magnesium alloys, and cadmium plated parts (when exposed to fuel) are not recommended, because of their inherent ability to create or contribute to a post crash fire. Section 29.952(a) requires each tank, or the most critical tank (if clearly identified by rational analysis) to be drop tested. The tank is filled 80 percent with water and the remaining 20 percent is filled with air (or, in the case of a flexible fuel cell, the air may be evacuated by hand and the cell resealed). The tank openings, except for the vents, are closed with plugs (or other suitable means) so that they remain watertight. The vents are left open to simulate natural venting. Otherwise, the tank is flight configured. The test tanks are installed in their surrounding structure and dropped from a height of 50 feet on a nondeformable surface (e.g., concrete or equivalent). To be considered a valid test, the tank must impact horizontally ±10°. The 50-foot distance is measured between the nondeformable surface and the bottom of the tank. The ±10° attitude requirement can be ensured by using lightweight cord or a light sling to balance the tank assembly horizontally prior to being dropped. MIL-T-27422B shows a typical test setup. Tank attitude at impact should be verified by photography or equivalent means. The nondeformable floor surface should be covered by a thin plastic sheet so that any leakage is readily detected. The tank water should be tinted with dye to make leakage and seepage sources easy to identify. The tank (except for the vent openings) should be wrapped in light plastic sheet to ensure that minor leakage or seepage (and its source) is detected. Minor spillage through the open vents during the drop test is allowed. The dye should not significantly affect the water's viscosity or other physical properties that may reduce or eliminate any leakage from the drop test. The nondeforming drop test surface should be carefully reviewed. Concrete is acceptable.

A fixed and uniformly supported steel plate (loaded only in uniform compression without any springback) is acceptable. Floors or floor coverings such as dirt, clay, wood, or sand are not acceptable. Selection of the critical fuel tank is important. Factors such as size, fuel cell design and construction, and material(s) should be accounted for when selecting the critical tank. The applicant may elect to drop only a bare fuel cell, not a surrounding structural airframe segment with a fuel cell installed. If so, the applicant must show that puncture hazards to the fuel cell have been eliminated.

(i) If the applicant elects to perform the drop test with surrounding aircraft structure, the cell should be enclosed in enough surrounding structure (production or simulated) so that the airframe/fuel tank interaction during the 50-foot drop is realistically evaluated. This allows the fuel-tight integrity of the "as installed" fuel cell to be evaluated and may provide protection in some designs due to the energy absorption of the surrounding airframe when crushed by impact. This provides realistic testing of fuel cell rupture points caused by installation design features, projections, excessive deformation and local tearout of fittings, joints, or lacings. The amount of actual (or simulated) structure included in the test requires engineering evaluation, risk assessment, and detailed analysis and may require subassembly (e.g., joint) tests for proper determination. Typically, the structure surrounding and extending 1 foot forward and aft of the fuel cell is adequate. This structure has a high probability of causing crash-induced fuel cell leakage. Each application should be examined individually to include all potential structural hazards. If the surrounding structure is clearly shown not to be a contributing hazard for the drop test, and if the applicant elects to do so, the fuel cell may be conservatively dropped alone. This determination should be carefully made by a detailed engineering evaluation. The evaluation should use standard, finite element-based programs (e.g., 'KRASH", NASTRAN, etc.) or similar programs submitted during certification, subassembly or component tests. Elimination of the surrounding structure for the drop test configuration is not trivial. If elimination is applied for, the data should clearly and conclusively show that the surrounding structure is not an impact hazard. In any case, the drop height is a constant 50 feet. The work that determines the test article configuration should be summarized, documented, and approved.

(ii) If the drop test is used to show partial compliance with the underfloor fuel cell load factors of § 29.952(b)(3), test plans should be approved. Minor spillage from the open vents is allowed. Full compliance to these load factors should be shown by static analysis and/or tests. The intent is to provide a fuel cell that is fuel tight and does not unduly crush the occupiable volume or overly stiffen energy absorbing underfloor structure under vertical impact.

(iii) Immediately after the drop test, the tank should be placed in the same axial orientation from which it was dropped and visually examined for leakage. Minor spillage from the open vents is allowed. After 15 minutes, the tank should be reexamined and any new leakage or seepage sources noted and recorded. Any evidence of fluid on the plastic floor cover or tank wrapping sheet should be noted and

recorded. Any fluid leakage or seepage constitutes a test failure. This procedure should be repeated immediately with the tank inverted and the vents plugged. The inversion procedure will identify any leak sources on the upper surfaces.

(2) Section 29.952(b) provides three sets of static load factors for design and static analysis of fuel tanks, other fuel system components of significant mass and their installations. "Installation" is structurally defined as the fuel cell's attachment to the airframe and any additional local (point design) airframe structure affected significantly by fuel cell crash loads (i.e., that would fail or deform to the extent that a fuel spill or a ballistic hazard would occur in a survivable impact). Section 29.952(d) significantly limits the amount of local airframe structure to be considered. The provision of load factors by zone ensures the fuel-tight integrity necessary to minimize PCF in a survivable impact. Unless explicitly shown by both analysis and test that the probability of fuel leakage in a survivable impact is 1×10^{-9} or less, each tank and its installation must be designed and analyzed to one set of these load factors.

(i) Section 29.952(b)(1) provides load factors for the design and static analysis of fuel cells and their attachments inside the cabin volume. These load factors are provided to prevent crash-induced fuel cell ballistics hazards to and fuel spills (that may cause a PCF) directly on occupants from local structural failures in a survivable impact.

(ii) Section 29.952(b)(2) provides load factors for design and static analysis of fuel cells and their attachments located above or behind the cabin volume. These load factors are provided to prevent injury or death from a fuel cell behind or above the occupied volume that is loosened by impact and to prevent fuel spills (which may cause a PCF) in a survivable impact.

(iii) Section 29.952(b)(3) provides load factors identical to those of § 29.561 for design and static analysis of fuel cells and attachments located in areas other than inside, behind, or above the cabin volume. Since many fuel cells are located under the cabin floor, these load factors provide fuel-tight structural protection in a survivable impact.

(iv) For some crash resistant semi-rigid bladder and flexible liner fuel cell installations, the 50-foot drop test (reference § 29.952(a)) can (with some additional rational analysis) simultaneously satisfy both the drop test requirement and the vertical down load factor ($-N_Z$) requirement of § 29.952(b)(3) for the fuel cell itself and its installation. This approach reduces the certification burden.

(v) For applicants that seek to substantiate the $-N_Z$ load factor requirement of § 29.952(b)(3) using the 50-foot drop test, additional substantiation is required for § 29.952(b)(3) (as is currently practiced) for the fuel cell under the loading of the remaining three load factors and the remaining rotorcraft structure under the loading of all four load factors. In some cases, substantiation of the remaining three

load factors can be further simplified by a successful drop test if the fuel cell is symmetric (i.e., structurally equivalent in all four directions).

(3) Section 29.952(c) requires self-sealing breakaway fuel fittings at all fuel tank-to-line connections, tank-to-tank interconnects, and other points (e.g., fuel lines penetrating firewalls or bulkheads) where a reasonable probability (as determined by engineering evaluation, service history, analysis, test or a combination) of impact-induced hazardous relative motion exists that may cause fuel leakage to an ignition source and create a PCF during a survivable impact. In some coupling installations (such as fuel line-to-fuel tank connections), the tank coupling half should be sufficiently recessed into the tank or otherwise protected so that hazardous relative motion (of the fuel cell relative to its surroundings) following an impact-induced coupling failure does not cause a tearout or deformation of the tank half of the separated coupling that would release fuel. The only exceptions are either-

(i) Installations that use equivalent devices such as extensible lines (hoses with enough slack or stretch to absorb relative motion without leakage) or motion absorbing fittings (rotational or linearly extensible joints); or

(ii) Installations that conclusively show by a combination of experience, tests, and analysis to have a probability of fuel loss to an ignition source in a survivable crash of 1×10^{-9} or less.

(4) Section 29.952(c)(1) specifies the basic design features required for self-sealing breakaway couplings.

(5) Section 29.952(c)(1)(i) defines the design load (strength) conditions necessary to separate a breakaway coupling. These loads should be determined from analysis and/or test, reference Paragraph d(6). The minimum ultimate failure load (strength) is the load that fails the weakest component in a fluid-carrying line based on that component's ultimate strength. This load comes from local deformation between the coupling and its surrounding structure during a worst-case survivable impact. A failure test of three specimens of the weakest component in each line that contains a coupling should be conducted in the critical loading mode. (If a single critical loading mode cannot be clearly identified, each of the three most critical loading modes should be tested.) The three specimen test results should be averaged. The average value is then used to size the breakaway fuel coupling. [For standard specification (i.e., "off the shelf") hardware, equivalent testing may have already been accomplished and, if no other mitigating circumstances in the design and installation exist, need not be repeated.] To assure separation of the coupling prior to fuel line failure and to prevent inadvertent actuation, the design load that separates the coupling should be between 25 and 50 percent of the minimum ultimate failure load (strength) of the line's weakest component. The critical loads should be compared to the normal service loads calculated and measured at the coupling location to insure unintended service failures do not occur. Typically this criterion is readily satisfied by the natural design because

working loads are much less than crash-induced loads. A separation load less than 300 pounds should not be used regardless of the line size. The minimum 300-pound load is necessary to prevent ground maintenance failures. A fatigue analysis and/or test (reference Paragraph d(10)) should be performed to ensure the installation is either a safe-life design or has a conservative, mandatory replacement time. The simplified method of section 9(a) of AC 20-95 may normally be used because of the low ratio of working-load-to-crash-induced failure load. However, since fatigue failures have occurred in service, all fatigue sources (especially high-cycle vibratory sources) should be evaluated. Fracture critical materials should be avoided, and damage tolerant materials utilized. Also, if airframe deformation due to flight loads is significant, its effect on the couplings should be checked to ensure that static or low-cycle fatigue failures do not occur prior to the part's intended retirement life. Large flight load deformations are not usually present in rotorcraft.

(6) Section 29.952(c)(1)(ii) requires a self-sealing breakaway coupling to separate when the minimum breakaway load (reference Paragraph d(5) and § 29.952(c)(1)(i)) is met or exceeded in a survivable impact. The loading modes (each of which produces a breakaway load) are determined by analyzing and/or testing the surrounding structure to determine the probable impact forces and directions. The modes usually occurring are tension, bending, shear, compression, or a combination (reference Figure 447–1). The coupling should be designed and tested to separate at the lowest ultimate impact load (lowest critical mode) as long as the minimum working load criterion of § 29.952(c)(1)(i) is also satisfied. Each breakaway coupling design should be tested in accordance with the following (reference MIL-STD-1290) or equivalent procedures. It should be noted that the ratio of the ultimate failure load of the weakest component in the fuel line and the normal service load (i.e., the peak load or approved clipped peak load experienced during a typical flight) of that component should be as high as possible and still meet the other load criteria of this section. Typically, this ratio should not be less than 5.

(i) Static Tests. Each breakaway coupling design should be subjected to tension and shear loads to verify and establish the design load required for separation, nature of separation, leakage during valve actuation, general valve functioning, and leakage following valve actuation. The rate of load application should not be greater than 20 inches per minute. Tests to be used where applicable are shown in Figure 447-1.

(ii) Dynamic Tests. Each breakaway coupling design should be proof-tested under dynamic loading conditions. The couplings should be tested in the three most likely anticipated modes of separation as defined in Paragraph d(5). The test configurations should be similar to those shown in Figure 447-1. The load should be applied in less than 0.005 second, and the velocity change experienced by the loading jig should be 36 ±3 feet per second.

(7) Section 29.952(c)(1)(iii) requires that breakaway couplings be visually inspectable to determine that the coupling is locked together (fuel-tight) and remains open during normal operations. Visual means (such as, an axial misalignment between the two coupling halves, a designed-in visual indicator, a combination or other acceptable criteria) should be considered and specified in the maintenance manual rejection criteria for operational inspections. Inspectability and phased inspection requirements should be evaluated. Special inspections after severe maneuvers or hard landings should be required.

(8) Section 29.952(c)(1)(iv) requires breakaway couplings to have design provisions that prevent uncoupling or unintended closing by operational shocks, vibrations, or accelerations. These provisions depend on both the coupling's design and installation location. The structural environment should be defined, analyzed, and compared with coupling specifications and certification data so that inadvertent decoupling or closing does not occur. A phased inspection requirement should be considered.

(9) Section 29.952(c)(1)(v) requires a coupling design to not release more than its entrapped fuel quantity when the coupling has separated and each end is sealed off. The entrapped fuel is determined by the coupling design and is essentially the fuel trapped between the seals when separation occurs (See breakaway coupling definition). This is usually less than 8 ounces of fuel per coupling. Most coupling designs will leak slightly after separation. This is acceptable but the leak rate should be 5 drops per minute, or less, per coupling half. Specifications defining the entrapped volume of fuel should be approved. If the coupling is not approved or manufactured to an acceptable military or civil specification, the qualification testing of d(6) should be conducted.

(10) Section 29.952(c)(2) requires that each breakaway coupling or equivalent device either in a single fuel feed line or a complex fuel feed system (e.g. a multiple feed line or multitank cross feed system) be designed, tested, installed, inspected, maintained, or a combination, so that the probability of inadvertent fuel shutoff in flight is 1×10^{-5}, or less, as required by § 29.955(a). This should be determined by reliability and failure analysis, other analysis, tests, or a combination and should be documented and approved. Continued airworthiness should be ensured by phased inspections, specific component replacement schedules, or a combination. This section also requires each coupling or equivalent device to meet the fatigue requirements of § 29.571 to prevent leakage. (See the fatigue discussion in Paragraph d(5).) The typical method of compliance with § 29.571 used for rotor system parts may not be necessary to meet § 29.952(c)(2). An S-N curve may not need to be generated using full-scale specimen fatigue tests if the conservative method of Section 9(a) of AC 20-95, "Fatigue Evaluation of Rotorcraft Structure" can be applied successfully.

(11) Section 29.952(c)(3) requires that an equivalent device, used instead of a breakaway coupling, not produce a load, during or after a survivable impact, on the fuel line to which it attaches greater than 25-50 percent of the ultimate load (strength) of the line's weakest component. This minimizes crash-induced fuel spills that may cause a PCF. The ultimate strength of the weakest component should be determined by analysis and/or tests. At least three specimens of the component should be tested to failure in the critical loading mode and the results averaged. [For standard specification (i.e., "off the shelf") hardware, equivalent testing may have already been accomplished and, if no other mitigating circumstances in the design and installation exist, need not be repeated.] The average value is then used to size the equivalent device. Each equivalent device must meet the fatigue requirements of § 29.571 to prevent fatigue-induced leakage. Equivalent devices should be statically and dynamically tested in an identical manner (where feasible) to breakaway couplings (reference Paragraph d(6)). All fuel hoses and hose assemblies (whether or not they are used in lieu of breakaway fittings) should meet the following (reference MIL-STD-1290) or equivalent requirements. Any stretchable hoses used as equivalent devices should be able to elongate a minimum of 20 percent without leaking fuel. All other hoses used as equivalent devices should have a minimum of 20-30 percent slack. It should be noted that the ratio of the ultimate failure load of the weakest component in the fuel line and the normal service load (i.e., the peak or approved clipped peak load experienced during a typical flight) of that component should be as high as possible and still meet the other load criteria of this section. Typically, this ratio should not be less than 5.

(i) All hose assemblies should meet or exceed the cut resistance, tensile strength, and hose-fitting pullout strength criteria of MIL-H-25579 (USAF), MIL-H-38360, or equivalent standards.

(ii) Hoses should neither pull out of their end fittings nor should the end fittings break at less than the minimum loads shown in Figure 447-3 when the assemblies are tested as described in d(11)(iii) below. In addition to the strength requirements, the hose assemblies should be capable of elongating to a minimum of 20 to 30 percent by stretch, slack, or a combination without fluid spillage.

(iii) Hose assemblies should be subjected to pure tension loads and to loads applied at a 90° angle to the longitudinal axis of the end fitting, as shown in Figure 447-2. Loads should be applied at a constant rate not exceeding 20 inches per minute.

(12) Section 29.952(d) requires frangible or deformable structural attachments to be used to install fuel tanks and other major system components to each other and to the airframe when crash-induced hazardous relative motion could cause local rupture and tearout of the component, spill fuel to an ignition source, and create a PCF. If it can be conclusively determined that the probability of fuel spillage is 1×10^{-9} or less, no further action is required. Typically, frangible designs are much

easier to certify than deformable designs because the scatter in failure loads is much less. Also, some standard frangible military hardware (e.g., frangible bolts) is readily available. This is not so for deformable designs. Each frangible or deformable structural attachment and its installation should be reviewed to insure that, after an impact failure (i.e., separation or deformation), it does not become a puncture or tear-out hazard and cause fuel spillage.

(13) Section 29.952(d)(1) defines the impact design load conditions necessary to deform a deformable attachment or to separate a frangible attachment. These loads should be determined from analysis and/or test (reference Paragraph d(14)), and verified during certification. All impact loading modes (tension, bending, compression, shear, and a combination) should be analyzed and the minimum critical frangible or deformable design load determined, based on the ultimate strength of the attachment's weakest component. The critical load should be compared to the normal service loads calculated and measured at the attachment's location to insure unintended service failures do not occur. (Normally, this criterion is readily satisfied because working loads are much less than impact loads.) A fatigue check should be conducted to ensure that the attachments meet the requirements of § 29.571. Typically, this can be accomplished using the simplified method of Section 9(a) of AC 20-95 because of the low ratio of working-load-to-crash-induced failure load. However, because of service history, all fatigue sources (especially high cycle vibratory sources) should be reviewed. The standard method of compliance with § 29.571 used for rotor system parts may not be necessary to meet § 29.952(d)(3). An S-N curve may not need to be generated using full-scale specimen fatigue tests, if the conservative method of Section 9(a) of AC 20-95 can be applied successfully. Fracture critical materials should be avoided and ductile, damage tolerant materials utilized. Phased inspections to ensure continued airworthiness should be considered. Special inspections after severe maneuvers or hard landings should be required. A breakaway or deformation load less than 300 pounds (based on maintenance considerations) is not permitted. If airframe deformation due to flight loads is significant, its effect should be checked to ensure that a static failure or low cycle fatigue failure does not occur. Large flight load deflections are not usually present in rotorcraft.

(14) Section 29.952(d)(2) requires a frangible or locally deformable attachment to function when the minimum breakaway or deformation load (reference § 29.952(d)(1)) is met or exceeded in a survivable impact. The minimum breakaway or deformation load is the load that either breaks or deforms each of the frangible or deformable attachment(s) of each fuel cell, fuel line, or other critical fuel system component to the airframe. Each breakaway/deformation load must be between 25 percent to 50 percent of the load which would cause failure (i.e., impact induced tearout and subsequent fuel leakage) of the attachment to fuel cell, fuel line, or other critical component interface. This is necessary in some installations to prevent tearout of the structural attachment from the fuel cell component to which it is attached and the resultant fuel leakage in a survivable impact. The primary loading modes (each of which will produce a breakaway or deformation load) must all be considered to

determine the minimum load. This is done by analyzing the surrounding structure (reference Paragraph d(13)) to determine the three most probable impact failure forces and their directions. The attachment should then be tested to insure it breaks or deforms at the lowest ultimate crash (impact) load as long as the minimum working load criterion of § 29.952(d)(1) is also satisfied. It should be noted that the ratio of the ultimate failure load of the weakest component in the frangible or deformable component's load path and the normal service load (i.e., the peak load or approved clipped peak load experienced during a typical flight) of that component should be as high as possible and still meet the other load criteria of this section. Typically this ratio should not be less than 5. The following certification tests (reference MIL-STD-1290) or equivalent should be conducted on each franglible or deformable attachment design.

(i) Static Tests. Each frangible or deformable device should be tested in the three most likely anticipated modes of failure as defined in Paragraph d(13). Test loads should be applied at a constant rate not exceeding 20 inches per minute until failure occurs.

(ii) Dynamic Tests. Each frangible or deformable attachment should be tested under dynamic loading conditions. The attachment should be tested in the three most likely failure modes as determined in Paragraph d(13). The test load should be applied in less than 0.005 second, and the velocity change experienced by the loading jig should be 36 ±3 feet per second. It should be noted that the dynamic load pulse is a ramp function starting at either 0 or some small test fixture preload and reaching the previously determined failure load in 0.005 seconds. The velocity change of the test jig is also a ramp function starting at 0 and reaching a final velocity of 36±3 ft./sec. in 0.005 seconds. These ramps functions simulate the dynamic conditions of a survivable impact under which the frangible/deformable attachment must perform its intended function.

(15) Section 29.952(d)(3) requires a frangible or locally deformable attachment to meet the fatigue requirements of § 29.571 to eliminate premature fatigue failure. The simplified method of AC 20-95 may be used. Because of service history, all fatigue sources (especially high-cycle vibratory sources) should be reviewed. Fracture critical materials should be avoided and ductile, damage tolerant materials utilized.

(16) Section 29.952(e) requires that, as far as practicable, fuel amd fuel containment devices be adequately separated from occupiable areas and potential ignition sources. Several generic categories of ignition sources and potential PCF-producing contact scenarios exist. The intent of the section is to define all possible leak and ignition sources that could be activated in a survivable impact and to provide design features to eliminate or minimize them such that the occurrence of PCF is minimized and escape time is maximized. Adequate separation should be accomplished by a thorough design review, potential PCF hazard analysis, and detailed

design trade studies. The resultant findings should be documented and approved. The following PCF hazards and any other such hazards should be documented, minimized by design to the maximum practicable extent, and their resolution documented and FAA/AUTHORITY approved. Conditions to be reviewed should include, but are not limited to, the following:

(i) High temperature ignition sources.

(A) Tank fillers or overboard fuel drains should not be located adjacent to engine intakes or exhausts so that fuel vapors could be ingested and ignited.

(B) Fuel lines should not be located in any occupiable area unless they are shrouded or otherwise designed to prevent spillage and subsequent ignition during and immediately following a survivable impact.

(C) Fuel tanks should not be located in or immediately adjacent to engine compartments, engine induction or exhaust areas, heaters, bleed air ducts, hot air-conditioning ducts, or any other hot surface.

(D) Fuel lines should be kept to a minimum in the engine compartment. Fluid lines should not be located immediately adjacent to engine exhaust areas, heaters, bleed air ducts, hot air-conditioning ducts, or any other hot surface.

(E) Fuel lines should not be located where they can readily spill, spray, or mist onto hot surfaces or into engine induction or exhaust areas. These locations should be determined for each aircraft design by considering probable structural deformation hazards in relation to the fuel system.

(ii) Electrical ignition sources.

(A) Fuel tanks and lines should not be located in electrical compartments.

(B) Electrical components and wiring should be separated from fuel lines and vent openings kept to a minimum in fuel areas.

(C) Electrical wiring should be hermitically sealed, and equipment should be explosion proofed in areas where they are immersed in or otherwise directly subjected to fuel and vapors and should meet § 29.1309 or should be otherwise protected such that ignition is extremely improbable.

(D) Electrical sensor lines that penetrate fuel tank walls should be protected from abrasion or guillotine cutting during a survivable impact by use of potting, rubber plugs or grommets, or other equivalent means and should be designed

with sufficient local slack, or equivalent means, to prevent both the wires and their protective mountings from being cut by or torn from fuel tank walls by local deformation.

(E) Electrical wires should be designed with sufficient slack or equivalent means to accommodate structural deformation without creating an ignition source.

(F) Electrical wires that could be subjected to severe local abrasion, cutting, or other damage during a survivable impact should be protected locally by nonconductive shields or shrouds.

(G) Electrical wires that are not sufficiently separated from heat or ignition sources to avoid potential contact during a survivable impact should be locally shrouded with a nonconductive fireproof shroud.

(iii) Friction spark, chemical, and electrostatic ignition sources. Fuel lines and tanks should be designed and located to eliminate fuel or fuel vapor ignition from potential mechanical friction spark ignition sources, chemical ignition sources, and electrostatic ignition sources having a high probability of being activated or created during a survivable impact.

(iv) Separation of fuel tanks and occupiable areas. Fuel tanks should be located as far as practicable from all occupiable areas. This minimizes potential PCF sources in occupiable areas and the potential for occupant saturation with fuel on impact. The design should be reviewed to minimize these potential hazards. Fuel tanks should also be removed, as far as practicable, from other potentially hazardous areas such as engine compartments, electrical compartments, under heavy masses (e.g., transmissions, engines, etc.), over landing gear, and other probable areas of significant impact damage, including rollover and skidding damage.

(v) Fuel Line Shielding. Areas of the fuel line system where the probability of spilled fuel reaching potential ignition sources or occupiable areas is greater than extremely improbable should be shielded with drainable fireproof shrouds. Shrouds should be drainable to allow periodic inspections for internal fuel leaks. The design should be reviewed to ensure these criteria are met.

(vi) Flow Diverters and Drain Holes.

(A) Drainage holes should be located in all fuel tank compartments to prevent the accumulation of spilled fuel within the aircraft. Holes should be large enough to prevent clogging by typical debris and to prevent fluid accumulation from surface tension force blockage.

(B) Drip fences and drainage troughs should be used to prevent gravity-induced flow of spilled fuels from reaching any ignition sources such as hot

engine areas, electrical compartments, or other potential hot spots. Drip fences and troughs are also necessary to prevent PCF by routing spilled fuel around ignition sources to drainage holes to minimize fuel accumulation inside the fuselage. Recurring inspection requirements to ensure holes and troughs remain airworthy should be identified. These criteria should be met, as far as practicable, for all postcrash attitudes. This is readily accomplished for the standard landing attitude, but is more difficult for other abnormal attitudes. However, the design should be thoroughly reviewed to insure maximum compliance without adversely impacting other safety and design criteria such as aerodynamic smoothness.

(vii) Fuel Drain System. The fuel drain system and its attachments to the airframe should be designed and constructed, as far as practicable, to be crash resistant. The following and other appropriate means should be considered for a crash resistant design. Tank drains should be recessed or otherwise protected so that they are minimally damaged by impact. Attachment of fuel drains to the airframe should be made with either frangible fasteners or equivalent means to prevent impact induced tearout and leakage. The number of drains should be minimized by design techniques such as those that avoid low points in the lines. Drain lines should be made of ductile materials or otherwise designed to provide impact tolerance. Drain line connections, fittings, and other components should be designed to meet the fatigue requirements of § 29.571 and § 29.952(d)(3). This ensures that unintended partial or full fatigue failures do not occur in normal operations that, if undetected, could compromise the CRFS's intended level-of-safety for the mitigation of post crash fire in a survivable impact. Drain valves should be designed to have positive locking provisions in the closed position in accordance with § 29.999(b)(2).

(17) Section 29.952(f) specifies that fuel tanks, fuel lines, electrical wires, and electrical devices must be designed and constructed, as far as practicable, to be crash resistant. Typical mechanical design criteria necessary to minimize fuel spillage sources, ignition sources, and their mutual contact in a survivable impact (i.e., provide crash resistance) are stated by the following subparagraphs. These mechanical design criteria should be incorporated in each design to the maximum practicable extent. Compliance is accomplished and assessed by a thorough design review and potential PCF hazard analysis with findings and solutions that are documented and approved. Any additional PCF hazards that are identified should be documented, included, addressed equally, and eliminated to the maximum practicable extent. Engineering evaluation, analysis, and tests are all required to determine the maximum level of practicability.

(i) They should not initiate or contribute to a post crash fire in an otherwise survivable impact. A hazard analysis should show which components are critical in this regard and should be assessed in detail for hazard elimination purposes.

(ii) Fuel and electrical lines and components should be located away from each other, away from probable crash impact areas, and away from areas where

structural deformation or large objects (such as engines or transmissions) may, by crushing or penetration, cause fuel spillage or create an electrical ignition source, or both.

(iii) Fuel and electrical lines and components should be located separately and away from areas where impact and severing by rotor blades during a survivable impact are probable.

(iv) Fuel and electrical lines and components should be in no danger of being punctured or severed during a survivable impact by locally stiff vertical understructure such as a collapsed landing gear strut.

(v) Fuel and electrical lines and components should be routed separately in areas of maximum protection, such as along heavier structural members, and away from areas where significant damage is probable.

(vi) Fuel and electrical lines and components running through hazardous areas or directly through structure, such as a bulkhead, should be locally separated and protected from over-extension, severe abrasion and guillotine cutting by frangible panels, suitable clearance, rubber grommets, braided armor shielding (which should be nonconductive for electrical lines), or other equivalent means.

(vii) Fuel lines routed directly to instruments, transducers, or other equivalent devices should be crash resistant, in accordance with § 29.1337(a)(2), to minimize leakage in case of line rupture induced during a survivable impact.

(viii) Electrical wires routed directly into electrical boxes or instruments should be designed with sufficient local slack and locally routed in the least probable damage direction and zone, or otherwise protected to minimize the probability of damage-induced arcing.

(ix) Fuel lines routed directly into fuel tanks or other fuel system components should be locally routed in the least probable damage direction and zone, or otherwise protected, to minimize the probability of damage-induced fuel leaks.

(x) Fuel pumps mounted inside fuel tanks should be rigidly attached to the fuel tank only. If the pump is airframe mounted and has structural significance, it should have a frangible or deformable attachment (reference Paragraph 12). Electrical boost pumps, if used, should be installed with a minimum of 6 inches of slack wire at the pump connection. The pump wires should be shrouded to prevent cutting in a survivable impact. Nonsparking, breakaway wire disconnects or other equivalent means may be used in lieu of the 6 inches of slack wire.

(xi) Fuel filters and strainers, to the maximum practicable extent, should not be located in or adjacent to the engine intake or exhausts and should retain the smallest practicable quantity of fuel.

(xii) The number of fuel valves should be kept to a minimum. If electrically operated valves are used, they should be installed with a minimum of 6 inches of slack in the electrical lines, unless protected by equivalent means (reference 17(i)). The valves should be installed with the maximum amount of protection and separation of the electrical wires from the remainder of the valve assembly.

(xiii) Fuel quantity indicators mounted in or on fuel tanks should be selected, designed, and installed to provide the minimum puncture or tear hazard to the fuel tank in a survivable impact.

(xiv) Fuel tank and bladder enclosures should have smooth, regular shapes that avoid sharp edges and corners. Minimum concave and convex radius design criteria should be developed and adhered to. Magnesium should not be used in fuel cells, and any cadmium-plated parts should not be exposed to fuel.

(xv) Any shielding of electrical wires from abrasion, cutting, or overextension must be nonconductive.

(xvi) All fuel line installations not containing breakaway couplings should be reviewed to insure that they will not be overtensioned in a survivable impact, that they are properly grouped and properly exit fuel tanks, firewalls, and bulkheads in the area of least probable damage, and that their number and lengths are safely minimized.

(xvii) Crash resistance guidance for other basic components is contained in related AC paragraphs such as Paragraphs 454 (§ 29.963, bladders and liners), 459 (§ 29.973, fuel tank filler connections) and 460 (§ 29.975, fuel tank vents).

(18) Section 29.952(g) requires rigid or semirigid fuel tank or bladder walls of any material construction to be both impact and tear resistant. This minimizes a PCF from impact-induced rupture and tear.

(i) A rigid tank or bladder can resist fluid pressure loads as a flat plate in bending. A semirigid tank can resist fluid pressure loads partially as a flat plate in bending and partially as a membrane in tension. Flexible liners are exempt from the requirements of § 29.952(g) since an unsupported flexible liner can resist only pure tension loads acting as a membrane (i.e., it has negligible bending strength). The rigid shell structure required by § 29.967(a)(3) that surrounds the flexible liner (membrane) carries the crash-induced impact and tear loads; whereas, the flexible liner is only significantly loaded in tension if the shell structure is penetrated by a sharp object on impact.

(ii) For metallic tanks, rigid or semirigid composite tanks (resin matrix), semirigid bladder designs (rubber matrix), metal-composite hybrid designs, and all other tank designs, impact and tear resistance should be shown by analysis and tests.

(iii) Designs using resin matrix composites should be subjected to the composite structure substantiation guidance of AC 20-107A, Composite Aircraft Structure, dated April 25, 1984, and Paragraph 788 of this AC. Designs using rubber matrix composites are subject to the standard substantiation requirements for these devices, such as TSO-C80.

(iv) One set of crash resistance tests that constitutes an acceptable method of substantiation to the requirements of § 29.952(g) for all tank designs regardless of the materials used are those specified in Paragraphs 4.6.5.1 (Constant Rate Tear); 4.6.5.2 (Impact Penetration); 4.6.5.3 (Impact Tear); 4.6.5.4 (Panel Strength Calibration); and 4.6.5.5 (Fitting Strength) of MIL-T-27422B, "Military Specification; Tank, Fuel, Crash-Resistant Aircraft." These test requirements, or equivalent means, should be applied for and discussed early in certification. If the MIL-T-27422B tests are selected, severity differences between military combat requirements and the civil environment should be accounted for by reducing the MIL-T-27422B requirements, as follows:

(A) Constant Rate Tear. The minimum energy for complete separation should be 200 foot-pounds (reference 4.6.5.1).

(B) Impact Penetration. The drop height of a 5-pound chisel should be reduced to 8.0 feet (reference 4.6.5.2).

(C) Impact Tear. The drop height of a 5-pound chisel should be reduced to 8.0 feet and the average tear criteria should not exceed 1.0 inch (reference 4.6.5.3).

(19) Section 29.952(g) also requires that all fuel tank designs (regardless of the materials utilized and whether or not a flexible liner of any type is used) for each tank or the most critical tank be analyzed and tested to the criteria of Paragraph (18)(iv), or equivalent.

(20) Any type of flexible liner or bladder used in any type of fuel tank construction (integral, hard shell, etc.) must meet the strength and puncture resistance requirements of § 29.963(b). Section 29.963(b) contains the new puncture resistance requirement for flexible liners and other liner material certification requirements. Unlined, bladderless fuel tanks are also required to meet this requirement. Most unlined, rigid fuel cell designs should readily exceed the 370-pound minimum puncture force requirement because of overriding design requirements and material characteristics, such as stiffness and ductility.

NOTE: TSO-C80, "Flexible Fuel and Oil Cell Material," is referenced in the advisory material for § 29.963(b) and contains the detailed qualification requirements for these materials. The current puncture resistance test of TSO-C80, Paragraph 16.0, states that the force required to puncture the bladder material must be greater than or equal to 15 pounds (e.g., screwdriver test). Section 29.963(b) has increased the TSO Paragraph 16.0 puncture force value to be greater than or equal to 370 pounds. This is for fuel cell bladder or liner material only. Oil cell material puncture force requirements are not changed.

e. Typical Examples of Loading Modes and Test Setups for CRFS Components. The following figures, which are referred to periodically in the advisory circular, show typical examples of test setups for CRFS components such as breakaway fuel fittings, hoses, hose end fittings, and hose assemblies.

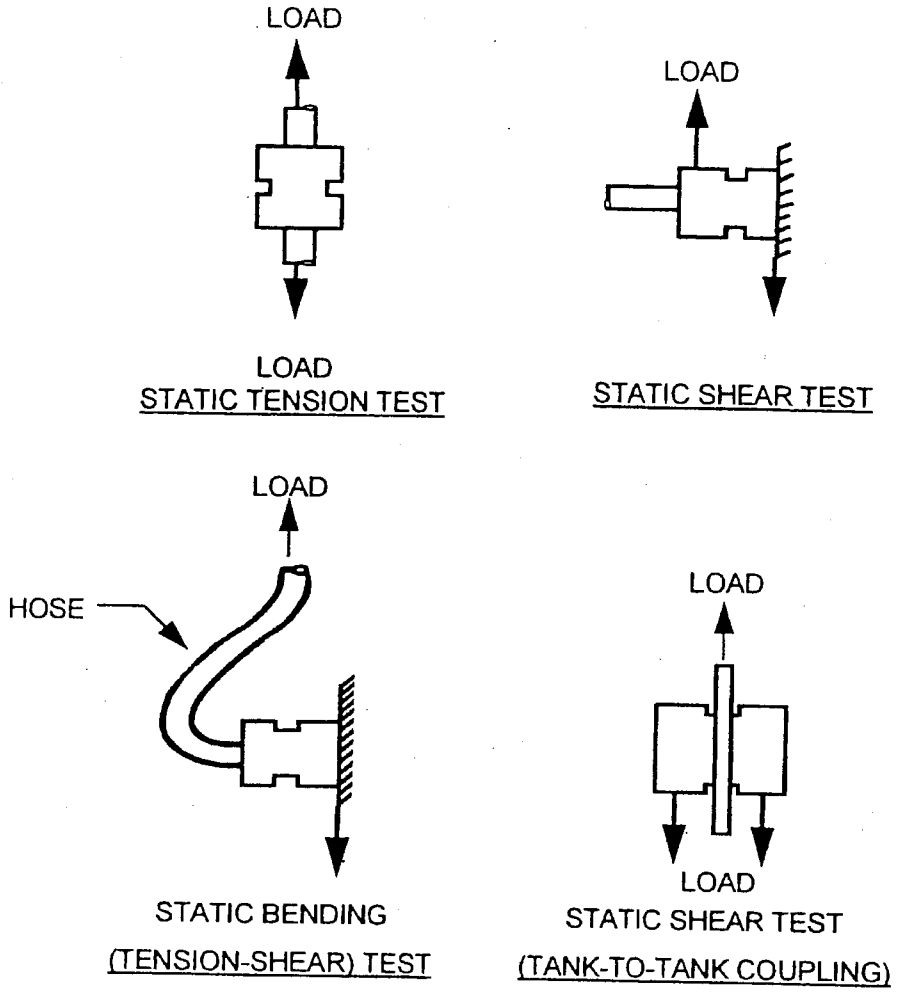

FIGURE 447-1. STATIC TENSION AND SHEAR LOADING MODES

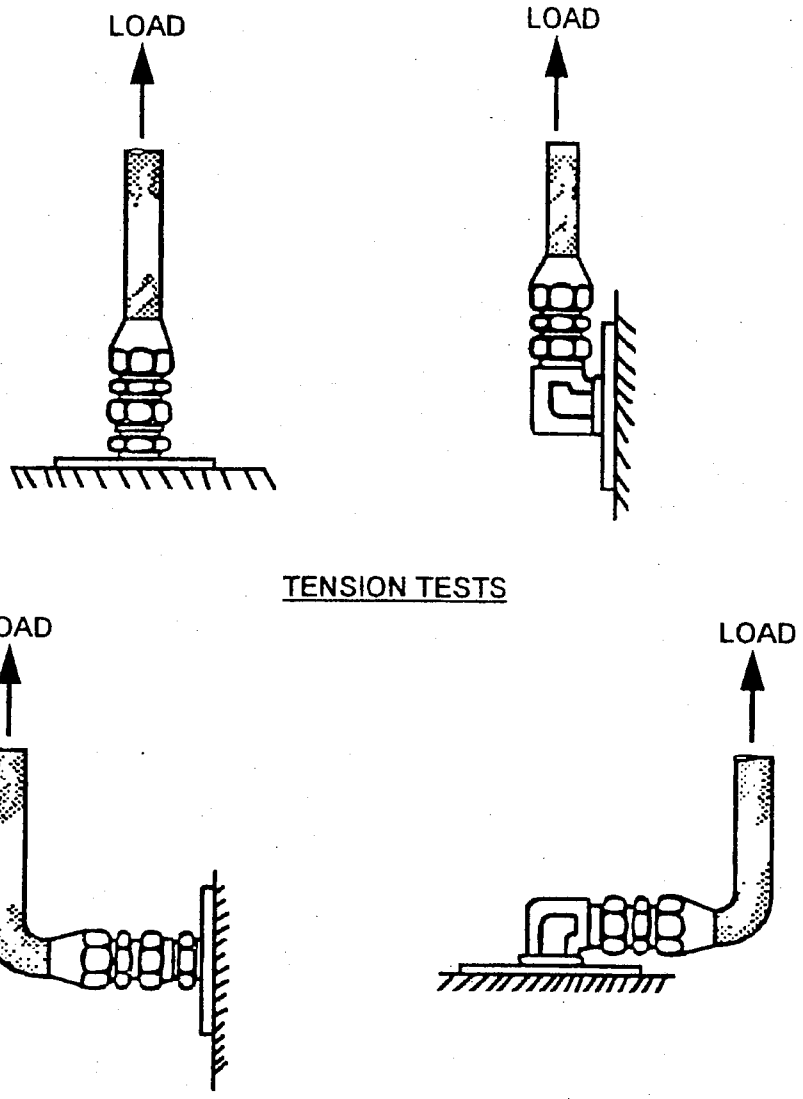

FIGURE 447-2. HOSE ASSEMBLY TESTS

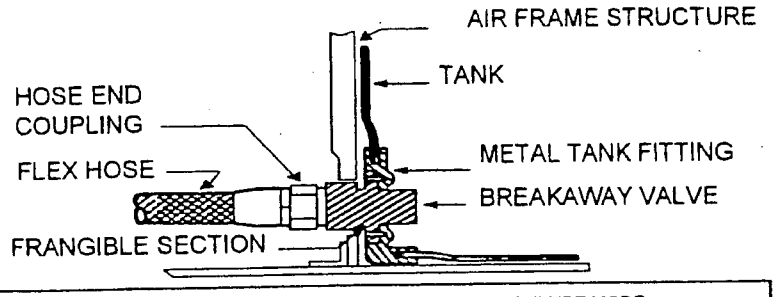

ITEM	LOWEST FAILURE LOAD (LB)*	FAILURE MODE
Flex Hose	3000	Tension Breakage
Flex Hose	1500	Pull Out of End Fitting
Tank Fitting	7500	Pull Out of Tank
Hose End Coupling	1650	Break (Bending)
Breakaway Valve	2500	Pull Out of Tank Fitting
Breakaway Valve	Not More Than $\frac{1500}{2} = 750$ Not Less Than $\frac{1500}{4} = 375$	Break at frangible Section

*Loads may or may not be representative; values are for explanatory purposes only.

FIGURE 447-4. TYPICAL METHOD OF BREAKAWAY FUEL FITTING LOAD CALCULATIONS (TANK INSTALLATION USED AS EXAMPLE ONLY; BASIC TECHNIQUE APPLICABLE TO OTHER CONFIGURATIONS)

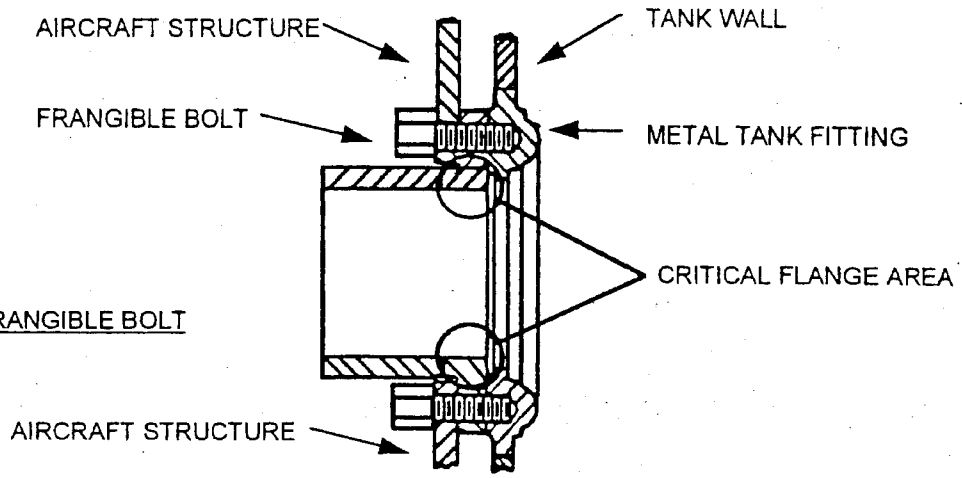

A. FRANGIBLE BOLT

ITEM	LOWEST FAILURE LOAD (LB)*		FAILURE MODE
AIRCRAFT STRUCTURE	4000		SHEAR
TANK FITTING	3000		PULLOUT OF TANK
FLANGE	5000		SHEAR
FRANGIBLE BOLT	NOT MORE THAN $\frac{3000}{2} = 1500$	NOT LESS THAN $\frac{3000}{4} = 750$	BREAK (TENSION-SHEAR)

FIGURE 447-5. TYPICAL METHODS OF FRANGIBLE OR DEFORMABLE ATTACHMENT LOAD CALCULATIONS: EXAMPLE 1, FRANGIBLE BOLTS.

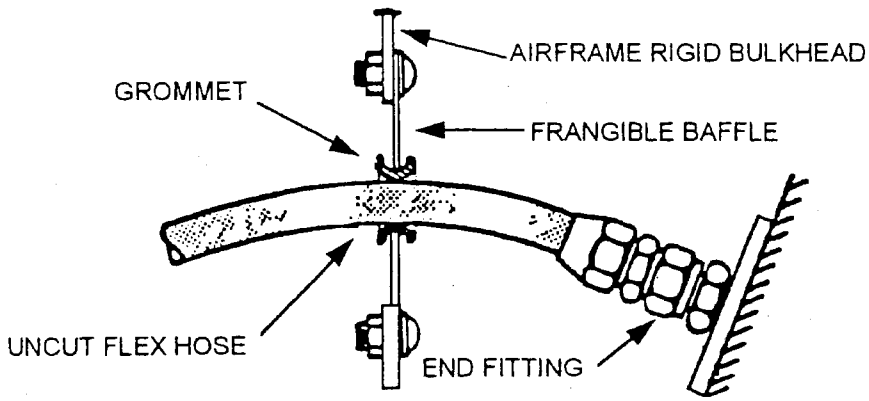

ITEM	LOWEST FAILURE LOAD (LB)*		FAILURE MODE
RIGID BULKHEAD	4000		BEARING
FLEX HOSE	3000		TENSION BREAKAGE
FLEX HOSE	1500		PULLOUT OF END FITTING
END FITTING	1750		BENDING
FRANGIBLE BAFFLE	NOT MORE THAN $\frac{1500}{2} = 750$	NOT LESS THAN $\frac{1500}{4} = 375$	BEARING

*VALUES ARE SHOWN FOR EXPLANATORY PURPOSES ONLY

FIGURE 447-6. TYPICAL METHODS OF FRANGIBLE OR DEFORMABLE ATTACHMENT LOAD CALCULATIONS: EXAMPLE 2, FRANGIBLE BAFFLE.