te technical note technic

Initial Development of an Exploding Aerosol Can Simulator

PB98-157977

Timothy Marker

April 1998

DOT/FAA/AR-TN97/103

This document is available to the public through the National Technical Information Service (NTIS), Springfield, Virginia 22161.

U.S. Department of Transportation

Federal Aviation Administration

REPRODUCED BY: NTIS
U.S. Department of Commerce
National Technical Information Service
Springfield, Virginia 22161

NOTICE

This document is disseminated under the sponsorship of the U.S. Department of Transportation in the interest of information exchange. The United States Government assumes no liability for the contents or use thereof. The United States Government does not endorse products or manufacturers. Trade or manufacturer's names appear herein solely because they are considered essential to the objective of this report.

Technical Report Documentation Page

1. Report No. DOT/FAA/AR-TN97/103 PB98-157977	3. Recipient's Catalog No.
4. Title and Subtitle INITIAL DEVELOPMENT OF AN EXPLODING AEROSOL CAN SIMULATOR	5. Report Date April 1998 6. Performing Organization Code AAR-422
7. Author(s) Timothy Marker	8. Performing Organization Report No. DOT/FAA/AR-TN97/103
9. Performing Organization Name and Address Fire Safety Section Federal Aviation Administration William J. Hughes Technical Center Atlantic City International Airport, NJ 08405	10. Work Unit No. (TRAIS) 11. Contract or Grant No.
12. Sponsoring Agency Name and Address U.S. Department of Transportation Federal Aviation Administration Office of Aviation Research Washington, DC 20591	13. Type of Report and Period Covered 14. Sponsoring Agency Code

15. Supplementary Notes

16. Abstract

A device was constructed to simulate an exploding aerosol can. The device consisted of a cylindrical pressure vessel for storage of flammable propellants and base product and a high-rate discharge (HRD) valve for quick release of the constituents. Simulator tests were conducted using representative constituents and propellant quantities for comparison with actual cans heated to the point of rupture and ignition. This report describes the tests conducted with the simulator in unconfined spaces, a B-727 cargo compartment, and an LD-3 Unit Loading Device (ULD). Subsequent work is planned with the aim of matching the pressure pulse produced by the exploding aerosol can simulator with that measured during an overheated aerosol can explosion.

17. Key Words Propellant, Base product, High-rate discharge valve, Minimum performance standard, Halon 1301 Tests		18. Distribution Statement This document is available to the public through the National Technical Information Service (NTIS), Springfield, Virginia 22161.	
19. Security Classif. (of this report) Unclassified	20. Security Classif. (of this page) Unclassified	21. No. of Pages 16	22. Price N/A

Form DOT F1700.7 (8-72) Reproduction of completed page authorized

TABLE OF CONTENTS

	Page
EXECUTIVE SUMMARY	v
INTRODUCTION	1
Purpose	1
Background	1
TEST RESULTS AND DISCUSSION	3
Description Of Initial Simulator	3
Initial Open-Air Tests	4
Confined-Space Tests	4
SUMMARY	9
REFERENCES	9
APPENDIX	
A—Description of Constituents Used in Typical Aerosol Products	

LIST OF FIGURES

Figure		Page
1	Schematic of Typical Aerosol Can	2
2	Schematic of Initial Exploding Aerosol Can Simulator	3
3	B-727 Test Article	5
4	Test Arrangement in LD-3 Container	6
5	Pressure Vessel Test Chamber, Top View	8

LIST OF TABLES

Table		Page
1	Tests Results, Aerosol Explosion Simulator in LD-3 Container	7

ABBREVIATIONS

HRD	High-Rate Discharge
ULD	Unit Loading Device
CSMA	Chemical Specialties Manufacturers Association
CTFA	The Cosmetic Toiletry and Fragrance Association

EXECUTIVE SUMMARY

Previous research and testing have shown that cargo compartment fires involving aerosol cans may be particularly dangerous. Heated aerosol cans will eventually overpressurize and rupture, releasing the flammable hydrocarbon-based propellant with explosive force. The resultant overpressure in the compartment is of particular concern, since the compartment lining system may become dislodged, allowing the protective fire suppression agent to escape.

The problem with conducting fire tests using actual aerosol cans is the inconsistencies of the catastrophic failure sequence. It is often difficult to reliably predict when the rupture sequence will occur as there are inherent differences in the fire growth from test to test which directly impact the degree of heat transfer to the metal can surface. For these reasons, a simulator device was constructed which can replicate an exploding aerosol can in a consistent manner.

The device consisted of a cylindrical pressure vessel for storage of flammable propellants and base product and a high-rate discharge (HRD) valve for quick release of the constituents. Simulator tests were conducted using representative constituents and propellant quantities for comparison with actual cans heated to the point of rupture and ignition. This report describes the tests conducted with the simulator in unconfined spaces, a B-727 cargo compartment, and an LD-3 Unit Loading Device (ULD). Subsequent work is planned with the aim of matching the pressure pulse produced by the exploding aerosol can simulator with that measured during an overheated aerosol can explosion.

The exploding aerosol can simulator will then be used to evaluate halon replacement agents in cargo compartment fire suppression systems. Prior research has shown the suppression and inerting of a cargo fire with Halon 1301 will prevent the explosion often associated with an aerosol can failure. It is imperative that replacement agents be equally effective as halon against cargo fires involving aerosol cans.

INTRODUCTION

PURPOSE.

This report describes the development of an exploding aerosol can simulator used to replicate the release and ignition of propellant when an aerosol can explodes in a fire. Tests were conducted in both unconfined and confined spaces, including a B-727 cargo compartment and an LD-3 container.

BACKGROUND.

The Montreal Protocol is a treaty signed by nearly all industrialized nations worldwide that bans the manufacture of ozone depleting halons. Halons are effective gaseous extinguishing agents that are used in a variety of applications in commercial aircraft, including cargo compartments, engine nacelles, hand-held extinguishers, and lavatory trash receptacles. Because of the diminishing availability of halons, the Federal Aviation Administration (FAA) has been developing minimum performance standards for replacement agents and systems in these areas. In commercial transport aircraft, the largest quantity of halon is used in the cargo compartment, as many aircraft are required to provide protection against in-flight fires while traveling over large distances. The minimum performance standard being developed for cargo compartments encompasses four fire test scenarios, including surface burning, bulk loaded luggage, containerized luggage, and exploding aerosol cans.

The exploding aerosol can scenario is based on previous test work which showed that cargo fires involving aerosol cans may be particularly dangerous. Heated aerosol cans will eventually overpressurize and rupture, releasing the flammable hydrocarbon-based propellant with explosive force. The resultant overpressure in a cargo compartment is of particular concern, since the compartment lining system may become dislodged, allowing the dispersed gaseous fire suppression agent to escape. Halon 1301 has proven to be extremely effective at mitigating an explosion caused by heated aerosol cans; therefore, replacement agents and systems must also provide equivalent performance. An alternative agent being evaluated is water mist which has proven its effectiveness against class A type cargo fires. Water mist systems are effective at suppressing simulated bulk loaded and containerized fires, but they typically function in a cycling manner. The mist is activated or deactivated, depending on the compartment temperature. The primary concern is whether or not a water mist system has the ability to mitigate the effects of an aerosol can failure, particularly when the mist is in the off mode.

Aerosol containers are high-strength metal units with capacities ranging from a few ounces up to a quart. The top and base of the container are generally domed, and the unit working pressures range between 210 and 280 pounds per square inch (psi). A base product is transferred into the aerosol container, an actuator assembly is fitted to the container body, and the container is then pressurized with propellant (figure 1). The propellants are chosen by the packager for the characteristics that they provide for discharge of the base product. Over the past decade the chlorofluorocarbon propellant used in aerosol cans has been replaced with hydrocarbon blends that include propane, butane, and isobutane. These flammable gases would normally be prohibited on passenger carrying airplanes, but there is an exception for up to 75 ounces of personal care items per person for medicinal and toilet articles when carried in checked baggage

only. The Research and Special Programs Administration (RSPA), the Federal agency responsible for the regulation of hazardous materials transport, states "Personal care items containing hazardous materials (e.g., flammable perfume, aerosols) totaling no more than 75 ounces may be carried on board. Contents of each container may not exceed 16 fluid ounces"[1].

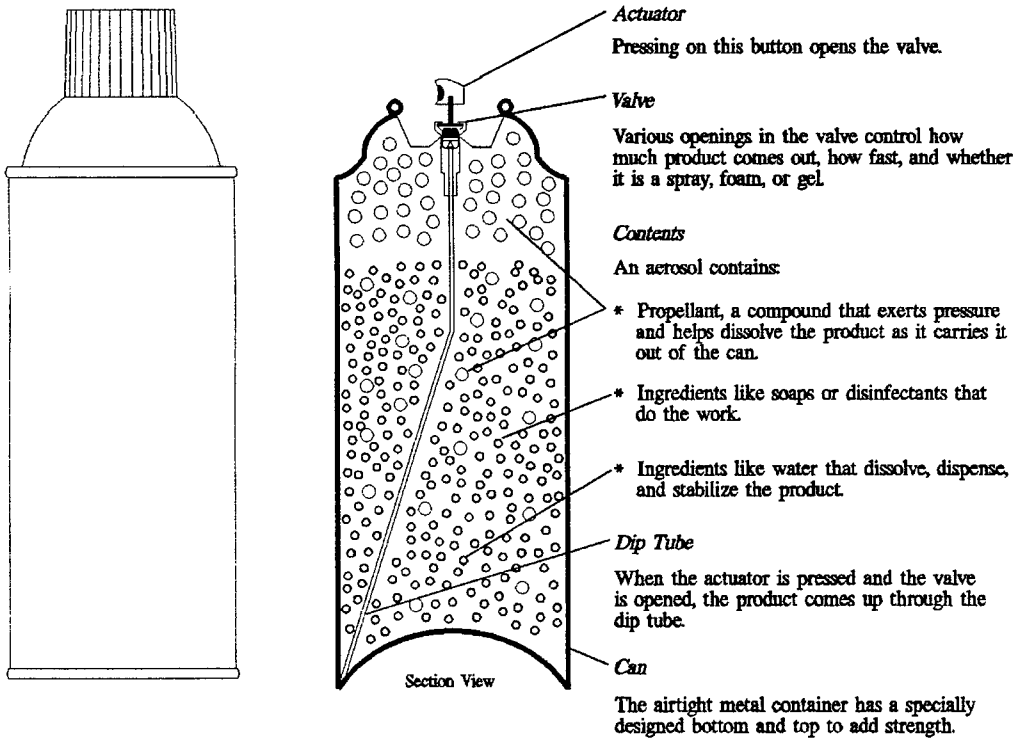

FIGURE 1. SCHEMATIC OF TYPICAL AEROSOL CAN

Several aircraft accidents involving fire have occurred over the past several years in which aerosol cans placed in passenger baggage have nearly exploded. Previous testing has shown that when typical nonventing aerosol cans are exposed to a fire they may cause a violent explosion [2]. The cans are designed to fail at different pressures, depending on the can strength. A standard can (STD) will rupture at 210 psi, a 2P can at 240 psi, and a 2Q can at 280 psi (minimum strengths and other critical limitations for aerosol containers are set by the RSPA to ensure safe transport in interstate commerce) [3]. The FAA also evaluated the effectiveness of an improved can as part of a Small Business Innovative Research (SBIR) Phase 2 contract. The testing determined that the improved can design was less hazardous and did not explode when involved in aircraft fire scenarios [4, 5].

The problem with conducting fire tests using actual aerosol cans is the vagaries of the catastrophic failure sequence. In many instances the metal can container will not completely fail, releasing the contents slowly and thus producing a blowtorch effect. In other tests, the contents are released in a perfect vapor cloud, which produces the most explosive force. Combinations of the blowtorch and vapor cloud also occur, as the flame front is dependent upon the ignition

source as well as the rate of release of the flammable propellant. Moreover, it is virtually impossible to reliably predict when the rupture sequence will occur as there are inherent differences in the fire growth from test to test which directly impact the degree of heat transfer to the metal can surface. For these reasons, a simulator device was constructed which can replicate an exploding aerosol can.

TEST RESULTS AND DISCUSSION

DESCRIPTION OF INITIAL SIMULATOR.

Previous testing has shown that when an aerosol can is exposed to a fire, the propellant and base product contents expand and eventually overpressurize the can causing it to burst. The most feasible method for replicating this sequence of events was to develop a simulator that was capable of storing and quickly releasing a specific quantity of hydrocarbon propellant and base product at pressures similar to the can burst pressures. The initial simulator design uses a steel pipe pressure vessel mated to a high-rate discharge (HRD) electrically actuated solenoid valve. The vessel contained ports and valves to allow for the transfer of base product (initially isopropyl alcohol) and hydrocarbon propellant (typically propane). The contents could then be heated by blowing a hot-air gun against the surface of the steel vessel, effectively raising the pressure. When the pressure was sufficient to burst a standard strength can, approximately 210 psig, the contents were released over a set of direct current (D.C.) spark igniters (figure 2). The electric spark was produced by a high-voltage transformer that bridged a 1.5 cm gap between a pair of electrodes.

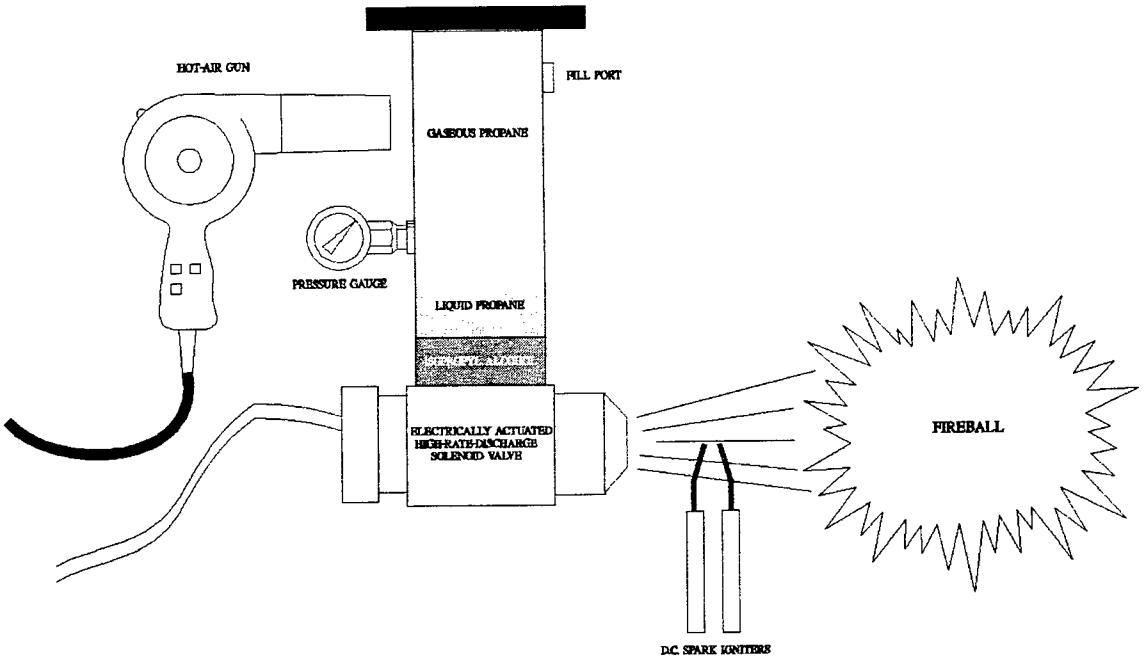

FIGURE 2. SCHEMATIC OF INITIAL EXPLODING AEROSOL CAN SIMULATOR

INITIAL OPEN-AIR TESTS.

Prior to testing the simulator, several tests were conducted in an unconfined space using aerosol cans heated to the point of rupture. These tests served as a basis with which the simulator could be compared. Large, 16-ounce hairspray cans were placed over a small, 4- by 6-inch heptane fire for several minutes. Upon bursting, the cans produced a fireball measuring 6 to 8 feet in diameter. The results varied considerably, and inspection of the ruptured cans revealed several failure mechanisms for releasing the contents. During some of the tests, the longitudinal seam was the point of initial release of the contents, while in other tests the entire bottom dome failed. The combustion of the can contents was noticeably more violent during bottom dome failures, as the products were released more rapidly.

Initial simulator tests were performed in an open area to observe the flame propagation pattern and to test the general operation of the device. To produce a representative explosion, the proper quantity of propellant and base product had to be used. Prior to the initial test, tabulated data illustrating the variety and quantity of typical constituents used in current aerosol products were provided by several aerosol industry consortiums including the Chemical Specialties Manufacturing Association (CSMA) and the Cosmetic, Toiletry, and Fragrance Association (CTFA). Appendix A lists the generic personal care product types along with the range (percentage) of propellant and base product quantities used. Although some mixes of antiperspirants and body sprays contain higher fractional concentrations of hydrocarbon propellant than hairsprays (35% vs. 25%), they generally exist in much smaller containers. Body spray and hairspray also contain relatively high levels of ethanol base product, but under current guidelines, the combined hydrocarbon blend and ethanol base product cannot exceed 80% of the total mass of the product. The initial tests used a mix of constituents in which the propellant quantity was representative of a large hairspray can (16 ounces) consisting of 3.5 ounces (weight) of liquid propane and 2.5 ounces (weight) of isopropyl alcohol, as measured using a digital 50-pound capacity scale. Several trials were conducted at various pressures, but the HRD valve failed to perform above 200 psig. At 200 psig, a large fireball about 12 feet in diameter could be produced repeatably. The simulated fireball was compared to the results of a test using an actual hairspray can placed above a small burning pan of heptane. During this event, the aerosol can burst after several minutes of exposure, creating a fireball approximately 8 feet in diameter. Since the initial test condition using the simulator appeared reasonable, further tests were conducted in a confined space.

CONFINED-SPACE TESTS.

The initial simulator setup was mounted to the forward bulkhead of a B-727 cargo compartment. The discharge nozzle of the HRD valve was installed through a cutout in the compartment bulkhead such that a majority of the simulator was outside of the compartment. The cutout was located midway between the compartment floor and ceiling at a height of approximately 18 inches (figure 3). The pressure vessel was again filled with 3.5 ounces of propane and 2.5 ounces of isopropyl alcohol as in the initial tests. After heating the vessel to increase the pressure of the contents to 200 psig, the mix was released into the compartment over the spark ignitors, which were situated approximately 3 feet from the nozzle exit. The ensuing explosion caused severe damage to the entire compartment, including the collapse of the forward and aft bulkheads. Major sections of the cabin floor above the compartment ceiling liner were blown

out of place and projected several yards away from the test article. There was also evidence of severe overpressure inside the structure, as several rivet heads on the exterior skin surface failed under tension.

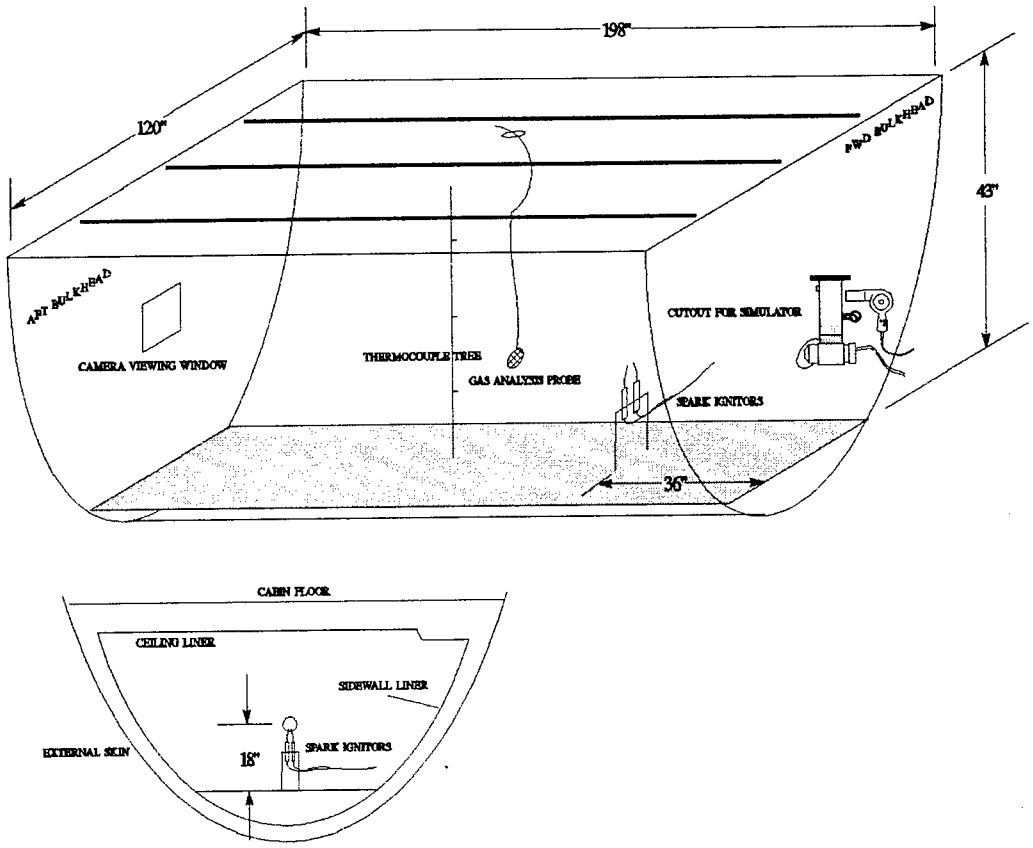

FIGURE 3. B-727 TEST ARTICLE

The next test was conducted to measure the effectiveness of Halon 1301 at mitigating this event. The damaged compartment was reconfigured and the simulator was again filled with the same mix of propane and isopropyl alcohol. The entire compartment was first inerted with Halon 1301 to a concentration of 6.5%. This concentration was measured using a continuous gas analyzer that sampled in the center of the compartment at a height of 2 feet, which was within close proximity of the spark igniters. The constituent mix was heated to 200 psig and released into the inerted compartment over the spark ignitors. No explosion event took place and no perceived pressure rise inside the compartment was observed.

Several additional proof-of-concept tests employing the aerosol simulator were conducted using fiberglass LD-3 Unit Loading Device (ULD) containers as the confining space. Prior to conducting these tests, a hairspray aerosol can placed in the LD-3 container over a small pan of burning heptane fuel was evaluated for comparison with the simulator results. After several minutes of heating, the hairspray can burst and overpressurized the LD-3 container enough to disengage and partially swing open the bi-fold door. Several additional tests were conducted and

verified the results with consistent findings. Tests were then conducted using the aerosol simulator containing the mix previously used in the B-727 test. A small hole was cut in one side of the LD-3 container at a height of 2 feet, and the discharge nozzle of the simulator was installed. The hot-air gun was also mounted externally, and the identical spark igniter assembly was placed near the center of the container, also at a height of 2 feet (figure 4). Upon release, the mix exploded with violent force, blowing the bi-fold door off of its hinges and catapulting it several yards into a wall. The container sustained heavy damage in the form of long cracks due to overpressure. During the simulation, a pressure rise of 8 psig was measured in the container using an Omega pressure transducer; high-speed data acquisition monitored and recorded the input signal from the transducer. The initial results indicated the damage incurred during the B-727 compartment and the LD-3 container test was more extensive than that sustained during actual aerosol can explosions.

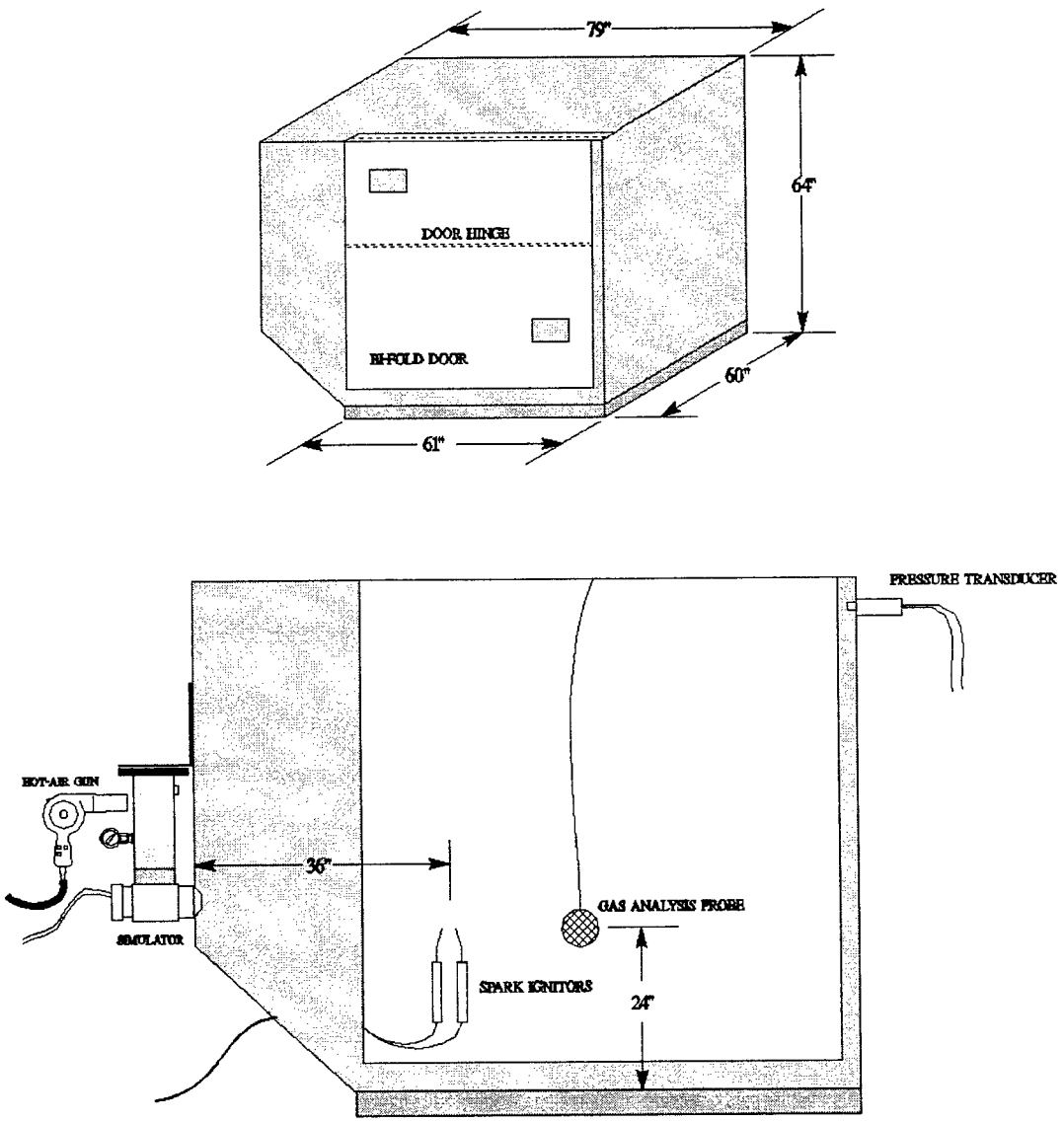

FIGURE 4. TEST ARRANGEMENT IN LD-3 CONTAINER

As with the B-727 tests, the effectiveness of Halon 1301 at mitigating this type of event was also investigated. Several additional tests were conducted in the LD-3 container which was inerted to various concentrations of Halon 1301 prior to simulator activation. After each test, the container was completely vented of all gases and an inspection was made of all equipment to ensure repeatability. The results of 10 tests are summarized in table 1. As shown, there was no explosion in the LD-3 container even when the concentration of halon 1301 was as low as 1%. At this point, it was thought that the simulator may have been malfunctioning, so an additional test was conducted without halon inerting. The result matched the first test in that the container door was completely blown off the hinges, totally destroying the container. These results illustrated the effectiveness of halon against this type of threat, even at substantially reduced concentrations. Although the tests demonstrated the ability of Halon 1301 to suppress at 1% concentration, the results differ from published literature, which indicates a minimum 6.7% concentration is required to inert a compartment against this type of explosion [6]. Further testing will be conducted to try to better understand this apparent discrepancy, including determining the role of the ignition source, as an open flame may produce a different result than the spark igniters used in the confined space tests.

TABLE 1. TEST RESULTS, AEROSOL EXPLOSION SIMULATOR IN LD-3 CONTAINER

Test	Halon 1301 Concentration (%)	Propane Weight (lb)	Isopropyl Alcohol Weight (lb)	Water Weight (lb)	Total Weight of Products (lb)	Results
1	0	0.23	0.16	0	0.39	violent explosion, door blown off
2	6	0.22	0.16	0	0.38	no explosion
3	5	0.22	0.16	0	0.38	valve malfunction, contents not fully released
4	3	0.22	0.16	0	0.38	contents from previous test released, no explosion
5	4	0.26	0.16	0	0.42	no explosion
6	3	0.23	0.16	0	0.39	no explosion
7	3	0.24	0.16	0	0.4	no explosion
8	2	0.24	0.16	0	0.4	no explosion
9	1	0.23	0.16	0	0.39	no explosion
10	0	0.23	0	0.16	0.39	violent explosion, 8 psi pressure rise, container destroyed

A more suitable test article is under development to allow for repeated measurement of the pressure rise experienced during future aerosol can explosion tests. A steel, cylindrical test chamber capable of withstanding elevated pressure and temperature will be outfitted with quick response pressure transducers to accurately measure the explosion sequence (figure 5). By determining the pressure pulse generated from actual aerosol can explosions, the simulator will be adjusted to produce equivalent results. An improved version of the simulator is also under development which uses a more reliable solenoid valve.

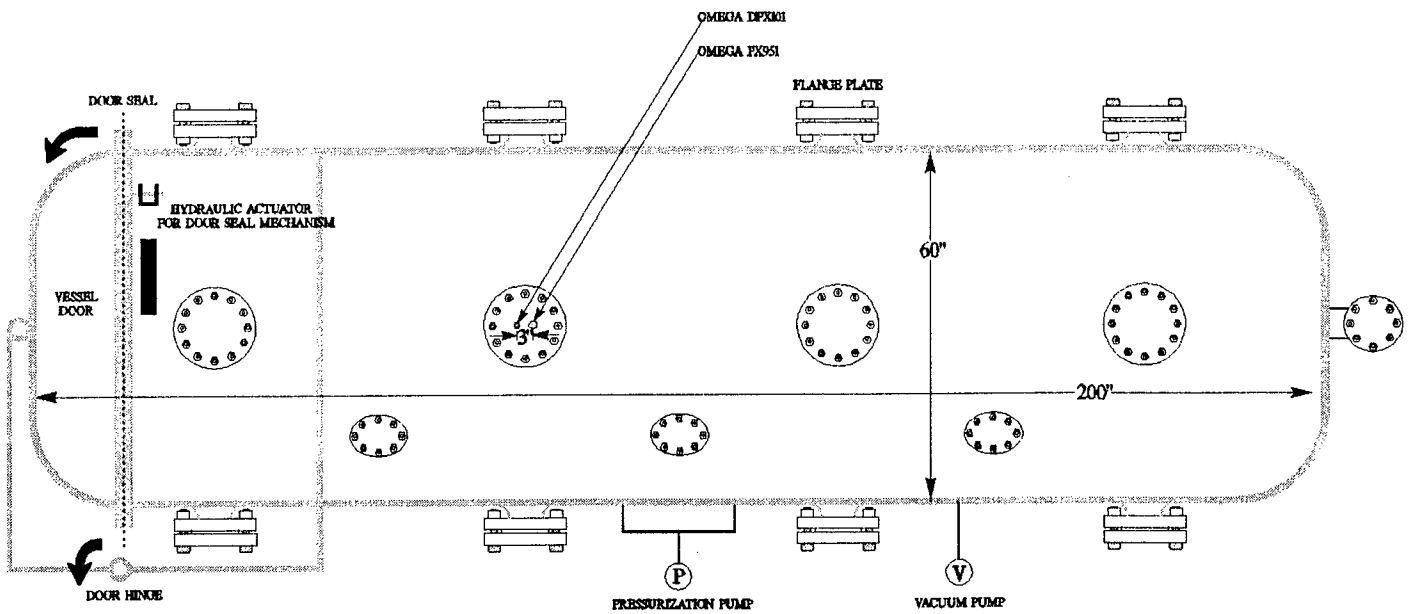

FIGURE 5. PRESSURE VESSEL TEST CHAMBER, TOP VIEW

SUMMARY

During tests using the aerosol can simulator, the uncontained fireball was 10 to 12 feet in diameter. The initial results with the simulation appeared reasonable since the amount of base product and propellant was within the range used in a large aerosol hairspray can. However, confined space tests conducted in a B-727 cargo compartment and an LD-3 container revealed the exceptional explosive power of the simulations. The damage incurred during these tests indicated the simulations produced a more severe event than the actual bursting aerosol can. A major reason for the consistent potency of the simulator lies in its ability to form a large, combustible vapor cloud, promoting complete combustion. When an actual can ruptures, the overpressure often causes an incomplete failure of the container, releasing smaller quantities of propellant in a stream or other shape that is less conducive to complete combustion.

A series of tests also demonstrated that Halon 1301 prevented the explosion generated by the simulator, even at reduced halon concentrations. Halon 1301 at a concentration of 6.5% prevented the hydrocarbon cloud produced by the simulator from exploding in a B-727 cargo compartment. During tests in the LD-3 container, concentrations ranging from 6% to as low as 1% also effectively prevented the vapor cloud from igniting and exploding.

REFERENCES

1. Department of Transportation, Federal Aviation Administration, Research and Special Programs Administration (RSPA), Pamphlet on Transportation of Hazardous Materials in Transport Aircraft.

2. Blake, D.R., Fire Hazards of Aerosol Cans in Aircraft Cargo Compartments, FAA Technical Report DOT/FAA/CT-89/32, December 1989.

3. Title 49, Code of Federal Regulations.

4. Daehn, Ralph C., Final Project Summary Report: Improved Aerosol Can, DOT Contract DTRS-57-91-C-00140, April 1994.

5. Hawthorne, C. and Blake, D.R., Performance of Improved Aerosol Cans Subjected to an Aircraft Fire, FAA Technical Report DOT/FAA/AR-TN95/78, December 1995.

6. Society of Fire Protection Engineers, Handbook of Fire Protection Engineering, 2nd Edition, p. 4-134.

APPENDIX A—DESCRIPTION OF CONSTITUENTS USED IN TYPICAL AEROSOL PRODUCTS

List of various aerosol-type personal care items and the propellants and base products used (Courtesy of the Aerosol Industry Consortium).

Product	Amount & type/class hydrocarbon	Amount &type/class other flammables	Classification by NFPA 30B	Europe
Antiperspirant	HFC 152a 15-25% Hydrocarbon A-17 35-45%	Cyclomethicone 25-27% Fragrance <1%	Level 2	Isobutane 80% Cyclomethicone 14% Level 3
Body Spray	Hydrocarbon blend 30-35%	Ethanol 50-60% Fragrance >1%	Level 3	Same as US
Deodorant	Propane/n-butane 14%	Ethanol 72% Fragrance <1%	Level 2	Isobutane 20-45% Ethanol 55-75%
Hairspray	HFC 152a/hydrocarbon blend 35-45%	Ethanol 40-55% Fragrance <1%	Level 2	Many same as US DME/hydrocarbon blend 40-50% Ethanol 35-40% n-pentane 20%
Hairspray	Dymel A 10-35%	Ethanol 45-60% Fragrance <1%	Level 2	
Hairspray	n-butane/propane 10-25%	Ethanol 45-60% Fragrance <1%	Level 2	
Hairspray	HFC 152a 20%	Ethanol 80%	Level 2	N/A
Hair Mousse	Isobutane/propane (/butane) 5-10%	Ethanol 4-5% Fragrance <1%	Level 1	Same as US
Shave Creams	Isobutane/(propane) 2-5%	Fragrance <1%	Level 1	Same as US
Shave Gels	Isopentane/Isobutane 3% Plus isobutane 4-6%	Fragrance <1%	Level 1	Hydrocarbon 9%