CUTR

PB99-109720

DECISION SUPPORT SYSTEMS APPLICATIONS IN URBAN TRANSIT SYSTEMS MANAGEMENT

VOLUME II

Soronnadi Nnaji, Ph.D.
Professor of Civil Engineering
FAMU-FSU College of Engineering

Primus Mtenga, Ph.D., P.E.
Assistant Professor of Civil Engineering

National Urban Transit Institute

at the University of South Florida's Center for Urban Transportation Research

A consortium with · Florida State University · Florida A & M University · Florida International University

REPRODUCED BY: NTIS
U.S. Department of Commerce
National Technical Information Service
Springfield, Virginia 22161

National Urban Transit Institute

CENTER FOR URBAN TRANSPORTATION RESEARCH
College of Engineering, University of South Florida
4202 E. Fowler Avenue, ENB 118, Tampa, FL 33620-5350
(813) 974-3120 SunCom 574-3120 Fax (813) 974-5168
Gary L. Brosch, Director

Consortium Member Contacts:

UNIVERSITY OF SOUTH FLORIDA
Steven E. Polzin, PhD, PE
Center for Urban Transportation Research
4202 E. Fowler Avenue, ENB 118, Tampa, FL 33620-5350
(813) 974-9849, Fax (813) 974-5168

FLORIDA STATE UNIVERSITY
William Mustard
Director of Research and Services
Florida Institute for Marketing Alternative Transportation
College of Business, Tallahassee, FL 32306-3037
(904) 644-2509, Fax (904) 644-6231

FLORIDA A&M UNIVERSITY
Charles A. Wright, PhD, PE
Director and Professor
Division of Engineering Technology
Post Office Box 164, Tallahassee, FL 32307
(904) 599-3506, Fax (904) 561-2739

FLORIDA INTERNATIONAL UNIVERSITY
L. David Shen, PhD, PE
Civil and Environmental Engineering
University Park Campus, VH-160, Miami, FL 33199
(305) 348-3055, Fax (305) 348-2802

The contents of this report reflect the views of the authors, who are responsible for the facts and the accuracy of the information presented herein.
This document is disseminated under the sponsorship of the Department of Transportation, University Research Institute Program, in the interest of information exchange.
The U.S. Government assumes no liability for the contents or use thereof.

TECHNICAL REPORT STANDARD TITLE PAGE

1. Report No. NUTI94FAMU2.2 PB99-109720	3. Recipient's Catalog No.
4. Title and Subtitle **DECISION SUPPORT SYSTEMS APPLICATIONS IN URBAN TRANSIT SYSTEMS MANAGEMENT**	5. Report Date February 1998 6. Performing Organization Code
7. Author(s) Soronnadi Nnaji, Ph.D., Principal Investigator Primus Mtenga, Ph.D. P.E., Co-Principal Investigator	8. Performing Organization Report No.
9. Performing Organization Name and Address National Urban Transit Institute Center for Urban Transportation Research, University of South Florida 4202 E. Fowler Avenue, ENB 118, Tampa, Florida 33620-5350	10. Work Unit No. 11. Contract or Grant No. **DTRS 93-G-0019**
12. Sponsoring Agency Name and Address **National Urban Transit Institute** **Research and Special Programs Administration** **U.S. Department of Transportation, Washington, D.C. 20690**	13. Type of Report and Period Covered July 1994 -July 1996 14. Sponsoring Agency Code

15. Supplementary Notes

Supported by a grant from the U.S. Department of Transportation, Research and Special Programs Administration, Office of University Research and Education

16. Abstract

Decision Support Systems models were developed for comparing the relative performance of the operation of any set of Mass Transit Agencies (MTA) and for comparing the relative performance of any given mass transit agency over time. The models were applied to two peer groups of MTA's in Florida. The number of Vehicles in Operational Maximum Service (VOMS) was used as a basis for grouping the agencies. The data used was abstracted from the National Transit Database on the performance of these agencies from 1991 through 1995.

The models were implemented on three different application environments. The peer group evaluation model and the panel (trend) model were implemented using the Expert Choice (EC) Decision Support software. The peer group evaluation model was converted into an Excel Spreadsheet program and also into a Mathcad 7 function program. In the second and third environments, the relative performance of an MTA was given as the sum, over all the performance attributes, of the product of the weight assigned to the attribute and the standardized index value of the attribute. The sum is defined such that the larger its value the better the relative performance of the MTA. Three methods (reduced variate, interval scale, variable inversion) for standardization of index values were coded into the programs.

There was close correspondence in the rankings based on the three methods and the Expert Choice rankings particularly for the peer group with large VOMS. The reduced variate and interval scale methods gave the same rankings of the transit agencies in all but two MTA's. Ranks from the EC and the ratio scale method appear to correspond better. In practical decision making these rankings will be used in conjunction with other considerations in order to make a final determination of, for example, any performance based revenue allocation a set of mass transit agencies.

17. Key Words Mass transit agencies, peer grouping relative performance evaluation, priority weights, ranking, performance indices, Expert Choice, Mathcad,	18. Distribution Statement Available to the public through the National Technical Information Service (NTIS), 5285 Port Royal Road, Springfield, VA 22181, ph (703) 487-4650		
19. Security Classif. (of this report) **Unclassified**	20. Security Classif. (of this page) **Unclassified**	21. No. of pages	22. Price

Form DOT F 1700.7 (8-69)

TABLE OF CONTENTS

Documentation Form ii
List of Figures iv
List of Tables iv
List of Abbreviations/Acronyms v
List of Representations vi
Acknowledgments vi
Abstract vii

Executive Summary 1

1. Introduction 2

2. Transit Performance Assessment 4
   2.1 Performance measures Indices 4
   2.2 Description of NTD tables 6
      2.2.1 Performance measures and indices 6
      2.2.2 Editing NTD data 8
      2.2.3 Selection of performance measures and indices 8
   2.3 Construction of peer groups 9
   2.4 Expert Choice Software 12

3. Transit System Evaluation [Ranking mass transit systems] 23
   3.1 National data Analysis Tool 23
   3.2 Current comparison approaches 23
   3.3 Ranking MTA's based on Relative Performance 25
      3.3.1 Using Expert Choice software 25
      3.3.2 Using Spreadsheet software 29
      3.3.3 Using Software tools (Mathcad) 30

4. Transit System Evaluation [Assessing performance trend] 32

5. Conclusions 35

6. References 36

7. Appendices
   7.1 Appendix 1 - Mathcad Program 38
   7.2 Appendix 2 - NTD Data Used for Ranking Transit Agencies 40
   7.3 Appendic 3 - NTD Data Used for Assessing Performance Trend 84

LIST OF FIGURES

1	Florida Fixed Route Transit System	10
2.	Basic Decision Model for Peer Group Evaluation (VOMS < 100)	14
3.	Basic Decision Model for Peer Group Evaluation (VOMS ≥ 100)	17
4.	Model for Assessing Performance Trend of Miami-MDTA	20
5.	Rank Order of MTA's (VOMS<100) Based on Relative performance	26
6.	Performance Trend for Miami-MDTA (1991-1995)	33

LIST OF TABLES

1.	Performance Review Indicators and measures	5
2.	Table Equivalencies of the National transit Database (1991 -1995)	6
3.	Performance Indices Used in Study	7
4.	Florida Transit Agencies: Vehicles in Operational Maximum Service	11
5.	Relative performance Evaluation Using Expert Choice (VOMS < 100)	27
6.	Relative performance Evaluation Using Expert Choice (VOMS ≥ 100)	28
7.	Comparison of MTA Rankings By Different Standardization Methods (1994 Data)	31
8.	Relative Performance of Selected MTA's, 1991 Through 1995	34

LIST OF ABBREVIATIONS/ACRONYMS	
AHP	Analytical Hierarchical Process
CUTR	Center for Urban transportation Research
EC	Expert Choice Decision support Software
FDOT	Federal Department of transportation
FTA	Federal transit Administration
MTA	Mass Transit Agency
NTAT	National Transit Analysis Tool
NTD	National Transit Database
OSZ	Overall Sum of z Scores
VOMS	Vehicles in Operational maximum Service

ACKNOWLEDGMENTS

This project is made possible through a grant from the U.S. Department of Transportation, Research and Special Programs Administration. Their support is gratefully acknowledged. The authors express appreciation for the useful discussions and subsequent review of this report by the peer reviewers.

PROJECT TEAM

Soronnadi Nnaji, Ph.D., Principal Investigator
Primus V. Mtenga, Ph.D., P.E., Co-Principal Investigator

PEER REVIEWERS

John Sobanjo, Ph.D., P.E.
Assistant Professor of Civil Engineering [Transportation Engineering]
FAMU-FSU College of Engineering

Andrew Dzurik, Ph.D., P.E.
Professor of Civil Engineering [Environmental Engineering, Transportation Planning]
FAMU-FSU College of Engineering

Renatus Moussa, Ph.D., P.E.
Assistant Professor of Civil Engineering [Transportation - Traffic Engineering]
FAMU-FSU College of Engineering

DECISION SUPPORT SYSTEMS APPLICATIONS IN URBAN TRANSIT SYSTEMS MANAGEMENT

ABSTRACT

Decision Support Systems models were developed for comparing the relative performance of the operation of any set of Mass Transit Agencies (MTA) and for comparing the relative performance of any given mass transit agency over time. The models were applied to two peer groups of MTA's in Florida. The number of Vehicles in Operational Maximum Service (VOMS) was used as a basis for grouping the agencies. The data used was abstracted from the National Transit Database on the performance of these agencies from 1991 through 1995.

The models were implemented on three different application environments. The peer group evaluation model and the panel (trend) models were implemented using the Expert Choice (EC) Decision Support software. The peer group evaluation model was converted into an Excel Spreadsheet program and also into a Mathcad 7 function program. In the second and third environments, the relative performance of an MTA was given as the sum, over all the performance attributes, of the product of the weight assigned to the attribute and the standardized index value of the attribute. The sum is defined such that the larger its value the better the relative performance of the MTA. Three methods (reduced variate, interval scale, variable inversion) for standardization of index values were coded into the programs.

There was close correspondence in the ranking based on the three methods and the Expert Choice rankings particularly for the peer group with large VOMS. The reduced variate and interval scale methods gave the same rankings of the transit agencies in all but two MTA's. Ranks from the EC and the ratio scale method appear to correspond better. In practical decision making these rankings will be used in conjunction with other considerations in order to make a final determination of, for example, any performance based revenue allocation a set of mass transit agencies.

EXECUTIVE SUMMARY

Current methods for peer group comparison of mass transit systems performance do not provide a way to combine the value of the attribute of each measure of system performance into an overall index with which to uniquely rank members of the peer group.

Decision Support Systems models were developed for ranking a set of Mass Transit Agencies (MTA) based on their relative performance and for assessing performance trend of any given mass transit agency based on its relative performance over time. The models were applied to two peer groups of MTA's in Florida. The number of Vehicles in Operational Maximum Service (VOMS) was used as a basis for grouping the agencies. The data used was abstracted from the National Transit Database on the performance of these agencies from 1991 through 1995.

Three general approaches for implementing the models were followed. The first approach involves the application of the Expert Choice (EC) Decision Support software. The ranking model was implemented for each of the two peer groups. The basic output is a listing of the MTA's with their relative performance percentage scores. The performance trend assessment model was implemented for a selected number of MTA's. The basic output is, for each MTA, the listing of the years with their corresponding relative percentage scores.

The second and the third approaches involved the coding of the ranking model in the Microsoft Excel and Mathcad environments, respectively. The Excel implementation was made for both MTA peer groups. In contrast, the Mathcad implementation was made for a subset of the performance attributes and for one peer group of MTA's for illustrative purposes.

In the second and third approaches, the relative performance of an MTA was given as the sum, over all the performance attributes, of the product of the weight assigned to the attribute and the standardized index value of the attribute. The sum is defined such that the larger its value the better the relative performance of the MTA. Three methods (reduced variate, interval scale, variable inversion) for standardization of index values were coded into the programs.

There was close correspondence in the rankings based on the three methods and the Expert Choice rankings particularly for the MTA's with VOMS greater than or equal to 100. The reduced variate and interval scale methods gave the same rankings of the transit agencies in all but two MTA's. Ranks from the EC and the ratio scale approach appear to correspond better. In practical decision making these rankings will be used in addition to other consideration to make a final determination of any performance based revenue allocation. The Mathcad code is transparent and can easily be adapted for implementation in other programming environments.

1. INTRODUCTION

PROBLEM STATEMENT: The Federal Transit Administration (1993) has published an introduction to the Section 15 Program and its primary product - the National Transit Database (**NTD**). Included in this publication are the different possible uses of the data in this database. The data may be used to guide national transportation policy, to evaluate the effects of previous decisions, to determine which transit operators improved their performance and hence qualify for additional federal assistance, to analyze transit performance and evaluate the costs and benefits of proposed alternative investments, to compare modal investments and to compare the efficiency, effectiveness, and overall utility of the operation of given system(s) with similar systems within a state, the country or zones thereof. To facilitate its use to meet the above goals, the database contains tables of performance indices derived from tables of attribute values on performance measures.
Several authors have applied a variety of techniques to analyze the NTD data to meet the above and other transit goals. In each case, because of the multi-dimensionality of the problems, investigators have used a selected few performance indices for analysis. Also, authors have not applied methods for combining these indices, which are usually of different units, into a composite index for relative ranking of the transit systems.

PROJECT OBJECTIVE: The primary interest in this study is to demonstrate, using the NTD data, the efficacy of applying the **Expert Choice (EC)** software package to the decision support situations encountered in meeting the goals enumerated above. The EC software is a very flexible multi-criterion decision support tool based on the Analytical Hierarchical Process - a powerful and comprehensive methodology for decision making. It allows the analyst to perform a multiplicity of analysis with one formulation, and to use any combination of performance indices also in the same formulation. It contains features for performing a variety of sensitivity analyses.
In volume I we developed a generic EC model for transit systems based, in part, on the set of system performance measures developed by the Florida Department of Transportation (FDOT, 1979). We applied this model to several intra-transit system decision situations and problems of choice between alternatives in proposed system improvements or expansions. Data for these applications were obtained from the Transit Development Plans that have been developed as planning documents by each transit system.

In this volume, we apply Expert Choice (**EC**) Decision Support software and the NTD data to **(1)** compare the efficiency, effectiveness, and overall **relative** performance of the operations of Florida Transit Agencies, **(2)** track changes in the relative performance of selected transit agencies over the period of 1991 through 1995. Techniques that have been documented by other investigators towards these ends are also applied to the same systems' data. Results from the EC application and from the above techniques are further compared.

CURRENT EFFORTS: Materials Computers and Communications Inc.(1995) are developing bus and transit performance profiles for transit systems operating 10 or more vehicles in maximum service. Data will be retrieved from the Section 15 database and aggregated to indicate each System's service effectiveness, vehicle efficiency and maintenance efficiency. The performance profiles contain a peer group analysis that indicates how a particular system is performing compared to similar systems nationally.

As a continuing effort, the Center for Urban Transportation Research [CUTR] at the University of South Florida, under contract with the Florida Department of Transportation, prepares a four part series of performance evaluation reports on Florida's transit systems (Rey, 1997). Part I of the series contains a trend analysis of fixed-route systems, Part II contains a fixed-route systems peer review analysis, Part III contains a demand-response trend analysis and Part IV contains demand-response peer review analysis. Periods covered for the latest reports are 1984 through 1995 for the trend analysis and 1995 for the peer review analysis.

For each transit system, the trend reports include trend plots and percentage changes in each performance indicator value. For the peer review analysis, the transit systems are placed in four peer groups based on similarities in geographic area, population density, number of vehicles, average speed and vehicle miles of service. The number of systems falling within or outside 10% of the **national** peer group average, based on number of buses operated, are identified for each performance indicator. This analysis does not address the issue of relative performance and subsequent ranking of the transit systems for, for example, performance-based funding.

Our terminology for the analyses is panel analysis instead of trend analysis, and cross-sectional analysis instead of peer review analysis used by CUTR. The panel term was considered more appropriate because of the limited time frame (1991 - 1995) considered for the study. Peer comparisons will be limited to the cross-section of Florida transit systems in contrast to the national peer group comparisons done in CUTR's peer review analyses.

Data for the CUTR-FDOT reports were abstracted from the Federally mandated reporting requirement forms completed by Florida transit systems receiving **Section 9** funding. These data are forwarded to the Federal Transit Administration and form part of the National Transit Database (NTD). We obtained our data from the published database through the FTA Internet homepage. NTD is a part of the electronic National Transit Library which can be found at the FTA's web address:

http://www.fta.dot.gov/ntl/database.html

2. TRANSIT PERFORMANCE ASSESSMENT

2.1 Performance Measures and Indices

References only are made to the many studies that have been published on definition of performance measures and the development of performance indices. *Long(1983)* has compiled a bibliography of such studies that were published in 1958 through 1983.. Of particular interest to this study are the reports by *Post, Buckley, Schuh and Jernigan (1979)* and *Owens(1980)* on the development of the Florida Transit System Performance Measures and Standards and their application in Florida Department of Transportation's Transit Management Assistance program. A listing of performance measures developed for the Florida DOT by the Center for Urban Transportation Research is presented in Table 1 below. These measures and corresponding indices are currently used by transit agencies in Florida.

Specific measures that define performance include (Carter and Lomax, 1992) effectiveness, efficiency, impact, labor productivity, and quality of service. Efficiency defines how well the system is using the resources available to it, effectiveness defines the benefits received from the service, and impact defines the difference the system makes in the quality of life of the patrons. Following Carter and Lomax we identify **service descriptors** as simple system input or output variables and **demographic factors** as the inherent characteristics of the service area. Examples of descriptors include passenger trips , passenger miles, operating expenses, total employees vehicles available for maximum service and total gasoline consumed. Examples of demographic factors include service area population and service area size. We note that CUTR and the Florida Department of Transportation refer to these descriptors and factors as **performance indicators**.

In contrast, **performance indicators** have been defined in the literature as ratios formed from the service descriptors and demographic factors. To avoid any confusion that may arise from the usage of the term, we shall use the word " index (indices)" when we refer to the ratio(s) formed from the descriptors and factors. Thus, the entries under the performance measures in Table 1 are subsequently referred to as **performance indices.** A measure may have more than one index. In practice most studies have used only the efficiency and effectiveness measures. Indices that reflect the other measures of performance are usually classified under the efficiency or effectiveness categories (Carter and Lomax).

TABLE 1.
Performance Review Indicators and Measures
Directly - Operated Transit Services

Performance Indicators (Service descriptors, Demographic factors)	Effectiveness Measures	Efficiency Measures
Service Area Population Service Area Size Passenger Trips Passenger Miles Vehicle Miles Revenue Miles Vehicle Miles Revenue Miles Route Miles Total Operating Expense Total Operating Expense (1984 $) Total Maintenance Expense Total Maintenance Expense (1984 $) Total Capital Expense Total Local Revenue Operating Revenue Passenger Fare Revenue Total Employees Transportation Operating Expense Maintenacne Employees Administrative Employees Vehicles Available for Maximum Service Vehicles Operated in Maximum Service Spare Ratio Total Gallons Consumed Total Energy Consumed (kW-hours)	**Service Supply** Vehicle Miles Per Capita **Service Consumption** Passenger Trips Per Capita Passenger Trips Per Revenue Mile Passenger Trips Per Reveune Hour **Quality of Service** Average Speed Average Age of Fleet (in years) Number of Incidents Revenue Service Interruptions Revenue Miles Between Incidents Revenue Miles Between Interruptions **Availability** Revenue Miles Per Route Mile	**Cost Efficiency** Operating Expense Per Capita Operating Expense Per Peak Vehicle Operating Expense Per Passenger Trip Operating Expense Per Passenger Mile Operating Expense Per Reveune Mile Operating Expense Per Revenue Hour Maintenance Expense Per Revenue Mile Maintenance Expense Per Operating Exp. **Operating Ratios** Farebox Recovery Local Revenue Per Operating Expense Operating Revenue Per Operating Expense Vehicle Miles OPer Peak Vehicle Vehicle Hours Per Peak Vehicle Revenue Miles Per Vehicle Mile Revenue Miles Per Total Vehicle Revenue Hours Per Total Vehicle **Labor Productivity** Revenue Hours Per Employee Passenger Trips Per Employee **Energy Utilization** Vehicle Miles Per Gallon Vehicle Miles Per Kilowatt-Hour **Fare** Average Fare

2.2 Description of the NTD Tables

Tables 1 through 22 [1992 - 1994] of the NTD contain values of service descriptors and demographic factors as defined above, while Tables 23 through 26 contain performance indices derived from the entries in the previous tables. Corresponding tables for 1991 and 1995 are, respectively, Tables 1 through 18 and Tables 1 through 25. The pertinent table equivalencies are given in Table 2. below.

Table 2. Table Equivalencies of the National Transit Database (1991 - 1995)

1991	1992	1993	1994	1995
Table 12	Table 14	Table 14	Table 14	Table 14
Table 17	Table 19	Table 19	Table 19	Table 19
Table 18	Table 20	Table 20	Table 20	Table 20
Table 19	Table 21	Table 21	Table 21	Table 26
Table 21	Table 23	Table 23	Table 23	Table 28
Table 22	Table 24	Table 24	Table 24	Table 29
Table 23	Table 25	Table 25	Table 25	Table 30
Table 24	Table 26	Table 26	Table 26	Table 31

The data table headers are included in Appendix I.

2.2.1 Performance Measures and Indices

Table 3. is a listing of the performance indices used in this study. Indices marked with an asterisk, while not included in the NTD performance indices tables, were part of the Florida DOT list. They were calculated from the NTD tables of service descriptors and demographic factors values. Table references are for 1992,1993 and 1994 NTD tables. Table references for 1991 and 1995 data can be deduced from Table 2 above. The columns are unchanged.

Table 3. Performance Indices Used in Study

Table Ref (1992-94)	Performance Index
14H/14E**	No. of service interruptions per veh. operated in max. service
20FG/20E*	No. of incidents per vehicle operated in max. service
21K/19MN*	Revenue hours per maintenance employee
21K/190*	Revenue hour per adminastrative employees
21K/19P*	Revenue hours per total employees
23F/23E*	Max. No. of Vehicle Operated in Average PM Peak Period
23G/23E*	Max. No. of Veh. Operated in Average Base Period
23H	Vehicles Operated in Max. Service Per Dir. Mile
23I	Ann. actual Veh. Revenue Miles Per Veh. Operated in Maxd. Service
23J	Anal. actual Veh. Revenue Miles per Employee Work Hour
23K	Anal. actual Veh. Revenue Miles per Vehicle Revenue Hour
23L	Actual Veh. Revenue Hours per Direct Directional Mile
23M	Actual Veh. Revenue Hours per Vehicle Operated in Max. Service
23N	Actual Veh. Revenue Hour per Employee Work Hour
24(I+M)*	Maintenance expenses per revenue mile
24F	Total Operating Expenses per Veh. Operated in Max. Service
24G	Total Operating Expenses per Vehicle Revenue Hour
24H	Total Operating Expenses per Unlinked Passanger Trips
24I	Total Operating Expenses per Passanger Mile
24J	Total Operating Expenses per Employee Work Hour
25F	Annual Pass. Miles per Directional Mile
25G	Annual Pass. Miles per Veh. Operated in Max. Service
25H	Annual Pass. Miles per Vehicle Revenue Hour
25J	Annual Unlinked Pass. Trips per actual Veh. Revenue Mile
25K	Annual Unlinked Pass. Trips per Employee Work Hour
25L	Annual Unlinked Pass. Trips per Vehicle Revenue Hour
26F	Vehicle Operations per Vehicle Operated in Hours Maximum Service
26G	Vehicle Hours per Vehicle Operated in Maintenacne Max. Service
26H	Non-vehicle Hours per Veh. Operated in Maintenacne Max. Service
26I	Administration per Vehicle Operated in Hours Max. Service
26J	Capital per Vehicle Operated in Hours Maximum Service
26K	Total System Vehicles Operated in Hours per Max. Service

Over the years the format of the data available in the National Transit Database (NTD) has changed as more performance measures were included for the different transit modes. For example, the performance index entered in column N in Table 21 (1991) and Table 23 (1992) was defined as annual revenue miles per operator while it was defined as annual revenue miles per employee work hour in Table 23 (1993), Table 23 (1994) and Table 28 (1995). Similarly, the definition in column J was given as annual revenue hours per operator and subsequently as annual revenue hours per employee work hour. For the equivalent Table 24 (1991), Table 26 (1992 -1994) and Table 31 (1995) definitions changes were made in existing columns and additional columns (indices) were added in 1993 onwards.

2.2.2 Editing NTD Data

In addition to changing data format and performance index definitions over the years, there where cases of questionable data entries. For example, in column L (annual actual revenue miles per directional mile) the value entered for Miami was between 14,500 and 15,000 for 1991 (Table 21) to 1994 (Table 23). It was 1,966,484 for 1995 (Table 26). Since the number of buses operated in 1995 was not significantly different from those in previous years, we figured that the decimal places were misplaced in the 1995 entry. We divided this entry by 100. In contrast the comparative disparity of 14000 vs 37070 for Fort Lauderdale was considered acceptable. Best judgement was used to adjust data whenever we had the rationale to do so. In cases where we could not surmise the source of data discrepancy, the performance indices in question were not used in the analysis.

2.2.3 Selection of Performance Measures and Indicators

Allen and Grim(1980) summarized the results of a study of service performance measurement and operating guidelines for the Delaware Authority for Regional Transit. A set of transit performance measures and operating guidelines were developed and used to assess DART's existing operations. Selection of how many and which transit data to use as performance indices is dependent on the individual system involved. According to the authors, transit performance indicators should be:

1) related to a stated system objective,
2) easily understandable and definable,
3) unbiased and objective,
4) measurable from available data,
5) methodologically correct i.e. properly separating input and output measures,
6) acceptable to the parties involved.

Following these criteria, particularly the first, underscores the need to have an analysis tool that is flexible and that can be easily modified to model decision scenarios with different objectives. Using the Expert Choice software all the indices are included in the formulation. The indices may be used selectively by assigning a zero weight to any index to be excluded in a particular run.

2.3 Construction of Peer Groups

The comprehensive work by Waziri and Deacon(1984) serves as a basis for our approach to peer grouping of the Florida transit systems investigated. These authors developed a methodology for grouping urbanized areas across the United States for the purpose of peer comparisons in transit performance evaluation. Only urbanized areas that were served by transit and that had adequate transit and census data were used. The authors first created a database of U.S. Census data on certain market and environmental variables for the urbanized areas. They then reduced the variables into the following six factor dimensions using factor analysis: poverty, size, youthfulness, education, automobile availability, and density. Using Section 15 data, the authors applied 25 transit performance measures to develop a composite measure of system performance defined as the overall sum of the z scores (osz).

Four schemes for clustering the urbanized areas into homogeneous (peer) groups were then analyzed using the Biomedical Computer program for the cluster analyses. The first scheme was based on the above six factor dimensions, the second scheme was based on the size dimension, which was found to be the most significantly correlated with performance. The third scheme was based on the osz and the fourth scheme was based on the combined basis of the osz and the six factor dimensions. The authors found that the resulting four sets of clusters were markedly different. They performed further analysis which showed that clustering based on the size factor alone is to be preferred for any subsequent investigations. The components of the size factor were the Census 1980 population and the urban area population in central city.

For this study, peer grouping was necessary since certain demographic factors such as size (population and service coverage were significantly different amongst the Florida transit systems. On the strength of the conclusion by Waziri and Deacon we elected to use the size factor as a basis for grouping the systems. Specifically, we used the Vehicles in Operational Maximum Service (VOMS) as a basis of grouping the systems because it incorporates the concept of size (service coverage, population served, and intensity of demand). VOMS values by year for the transit systems investigated are given in Table 4. The demarcation value for peer grouping is 100 VOMS.

FIGURE I-2
Florida's Fixed-Route Transit Systems

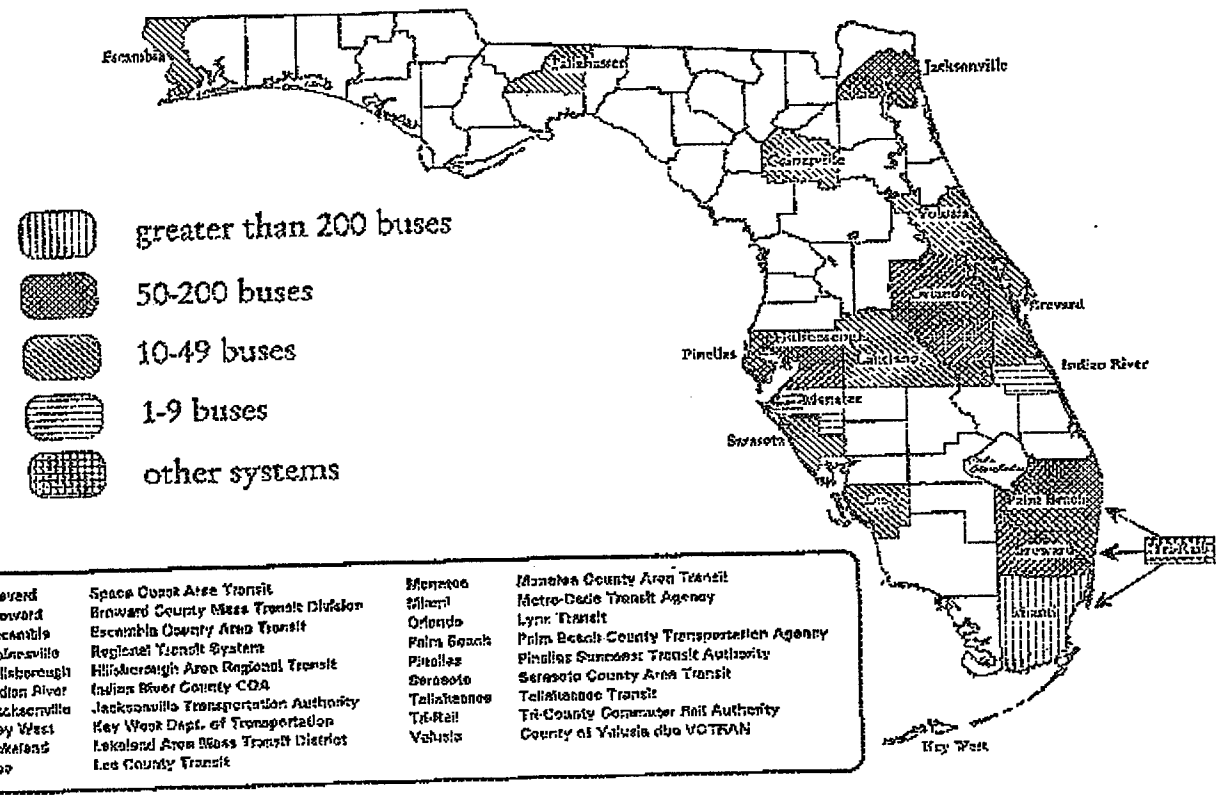

Table 4. Florida Transit Systems : Vehicles in Operational Maximum Service(VOMS)

Peer Group	*Transit System*	*1991*	*1992*	*1993*	*1994*	*1995*
	Brevard	N/A	11	11	14	14
	Daytona	34	34	34	28	36
	Ft. Myers	24	25	26	30	28
	Gainesville	32	32	30	30	31
I	Lakeland-Citrus	15	14	14	16	17
	Pensacola	18	21	25	23	26
	Sarasota	19	20	20	20	25
	Tallahassee	41	41	41	42	44
	West Palm	58	60	57	57	58
	Ft. Lauderdale	155	155	166	167	178
	Jacksonville	133	134	135	137	139
II	Miami	458	505	501	496	508
	Orlando	88	108	113	136	144
	St. Petersburg	105	104	101	102	103
	Tampa	140	133	133	137	137

2.4 Expert Choice Software

Expert Choice (EC) software (1996) is based on the Analytical Hierarchical Process (AHP) - a powerful and comprehensive methodology that provides groups and individuals the ability to incorporate both qualitative and quantitative factors in the decision making process (Saaty 1992), The AHP uses a hierarchical model comprised of a goal, objectives, perhaps several levels of sub-objectives and alternatives for each problem or decision. It is a general method for structuring intricate or ill-defined problems and is built around the principles of constructing hierarchies, of establishing priorities, and of logical consistency. EC can accommodate a variety of data types and merge them into a single overall measure to determine which alternative is the most desirable. Specifically, EC can be used to:

Select alternatives,
perform evaluations,
predict likely outcomes,
facilitate group decision making,
do cost benefit comparisons,
allocate resources in general,
plan projected and desired futures,
exercise control over changes in the decision making system.

Two types of decision models may be developed using EC. The first is the Basic Decision model which may be used to compare alternatives against *each other* under the lowest level objective. The second is the Rating Decision model which may be used to compare alternatives against standards for each lowest level objective. The former category of models is of interest in this study.

MODEL BUILDING

The possible decision problems that may be addressed with data from the NTD have been identified (FTA, 1993). They were paraphrased in the opening paragraph of this report. Of interest in this study are the decision situations where the **goal** is to compare the relative efficiency, effectiveness, and overall utility of the operation of Mass Transit Systems (MTA's) within the State of Florida **and** to compare the relative performance of each MTA over time. Three main (level 1) objectives may be identified as maximize service and cost efficiency, and minimize expenses. Two sub-objectives (level 2 objectives) under the cost efficiency objective are identified as maximize the revenue-hours and maximize the revenue-miles of operation. The degree of attainment of, for example, the first of the second level objectives may be assessed by one or more of the following five attributes* (indices):

21K/19O	Revenue hour per administrative employees
21K/19P	Revenue hours per total employees
23L	Actual Veh. Revenue Hours per Direct Directional Mile
23M	Actual Veh. Revenue Hours per Vehicle Operated in Max. Service
23N	Actual Veh. Revenue Hour per Employee Work Hour

* See Table 3.

In the ranking model, each attribute indicates the degree to which each MTA meets the objective of maximizing revenue hours. In the model for assessing performance trend, each attribute indicates the degree to which a given MTA meets the objective in a given year. The hierarchy for the other level 1 objectives may be similarly constructed.

An EC hierarchy prepared for an application constitutes a model. Model 1, represented by Figure 2, is the overall performance objectives hierarchy for ranking MTA's with a VOMS count of less than 100. Model 2, represented in Figure 3, is the overall performance objectives hierarchy for ranking MTA's with VOMS count of 100 or more. The MTA's constitute the "alternatives" to be compared. Model 3, represented in Figure 4, is the overall performance objectives hierarchy for assessing performance trend for the Miami Dade Transit Authority as an example of a Florida MTA. Note that the years 1991, 1992, 1993, 1994, and 1995 are the "alternatives" in this case. Models 4 through 8 were similarly constructed for performance trend assessmrnt of the Daytona-VOTRAN, Ft. Lauderdale-BCT , Miami-MDTA, Orlando-LYNX, and St. Petersburg-PSTA.

DATA REQUIREMENT:

The model input include priority weights assigned to the objectives at different levels of the hierarchy and the performance index values of the attributes of the lowest level objectives. EC refers to these priority weights simply as priorities. Non-pertinent objectives were assigned zero weights in the model. The values of the attributes were imported into EC from EXCEL worksheets of the NTD database. Global weight is the weight of each objective relative to the goal and represents the portion of the goal's weight of one (1) which is assigned to the objective. The global weight of a set of subordinate objectives add up to the global weight of the objective to which they are subordinate.

The weight of each objective relative to its superior objective is called the local weight. It represents the percentage of the parent node's priority that is assigned to its sub-objective. The local weights of the a set of sub-objectives under an objective add up to one. A non-pertinent objective is simply assigned a zero weight which effectively eliminates the objective and its sub-objectives from influencing the ranking of the alternatives. The attributes (indices) may be used selectively by assigning a zero weight to any index to be excluded in a particular run.

Figure 2. Basic Decision Model for Ranking MTA's with VOMS < 100

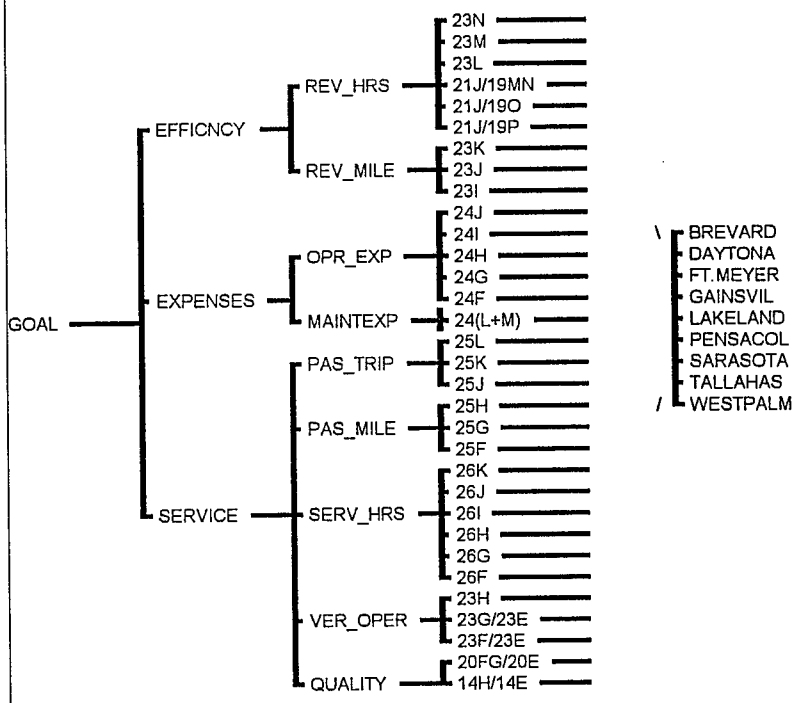

Abbreviation	Definition
14H/14E	No. of srevice interruptions per veh. operated in max. service
20FG/20E	No. of incidents per vehicle operated in max. service
21J/19MN	Revenue hours per maintenance employee
21J/19O	Revenue hours per maintenance employees
21J/19P	Revenue hours per total employees
23F/23E	Max. No. of Veh. Operated in Average PM Peak Period
23G/23E	Max. No. of Veh. Operated in Average Base Period
23H	Vehicles Operated in Max. Service Per Dir. Mile
23I	Ann. actual Veh. Revenue Miles per Veh. Operated in Max. Service

Runtime Author Version

Figure 2. Basic Decision Model for Ranking MTA's with VOMS < 100

23J	Anal. actual Veh. Revenue Miles per Employee Work Hour
23K	Anal. actual Veh. Revenue Miles per Vehicle Revenue Hour
23L	Actual Veh. Revenue Hours per Direct Directional Mile
23M	Actual Veh. Revenue Hours per Vehicle Operated in Max. Service
23N	Actual Veh. Revenue Hour per Employee Work Hour
24(L+M)	Maintenance expenses per revenue mile
24F	Total Operating Expenses per Veh. Operated in Max. Service
24G	Total Operating Expenses per Vehicle Revenue Hour
24H	Total Operating Expenses per Unlinked Passanger Trips
24I	Total Operating Expenses per Passanger Mile
24J	Total Operating Expenses per Employee Work Hour
25F	Annual Pass. Miles per Directional Mile
25G	Annual Pass. Miles per Veh. Operated in Max. Service
25H	Annual Pass. Miles per Vehicle Revenue Hour
25J	Annual Unlinked Pass. Trips per actual Veh. Revenue Mile
25K	Annual Unlinked Pass. Trips per Employee Work Hour
25L	Annual Unlinked Pass. Trips per Vehicle Revenue Hour
26F	Vehicle Operations per Vehivle Operated in Hours Maximum Service
26G	Vehicle Hours per Vehicle Operated in Maintenance Max. Service
26H	Non-vehicle Hours per Veh. Operated in Maintenance Max. Service
26I	Administration per Vehicle Operated in Hours Max. Service
26J	Capital per Vehicle Operated in Hours Maximum Service
26K	Total System Vehicles Operated in Hours per Max. Service
BREVARD	Brevard - SCAT
DAYTONA	Daytona Beach - VOTRAN
EFFICNCY	Maximize Operational Efficiency
EXPENSES	Minimize Expenses
FT.MEYER	Ft. Meyers-Lee - TRAN
GAINSVIL	Gainsville - RTS
LAKELAND	Lakeland-Citrus Connect
MAINTEXP	Maintenance expenses
OPR_EXP	Operating expenses
PAS_MILE	Passanger Miles
PAS_TRIP	Passanger Trips
PENSACOL	Pensacola - ECTS
QUALITY	Service quality (safety and service interruptions)
REV_HRS	Revenue Hours

Runtime Author Version

Figure 2. Basic Decision Model for Ranking MTA's with VOMS < 100

REV_MILE	Revenue Miles
SARASOTA	Sarasota - SCTA
SERVICE	Maximize availability and consumption
SERV_HRS	Directly operated service hours
TALLAHAS	Tallahassee - TALTRAN
TALLAHAS	Tallahassee - TALTRAN
VER_OPER	Vehicles operated
WESTPALM	West Palm-CO TRAN

Runtime Author Version

Figure 3. Basic Decision Model for Ranking MTA's with VOMS >=100

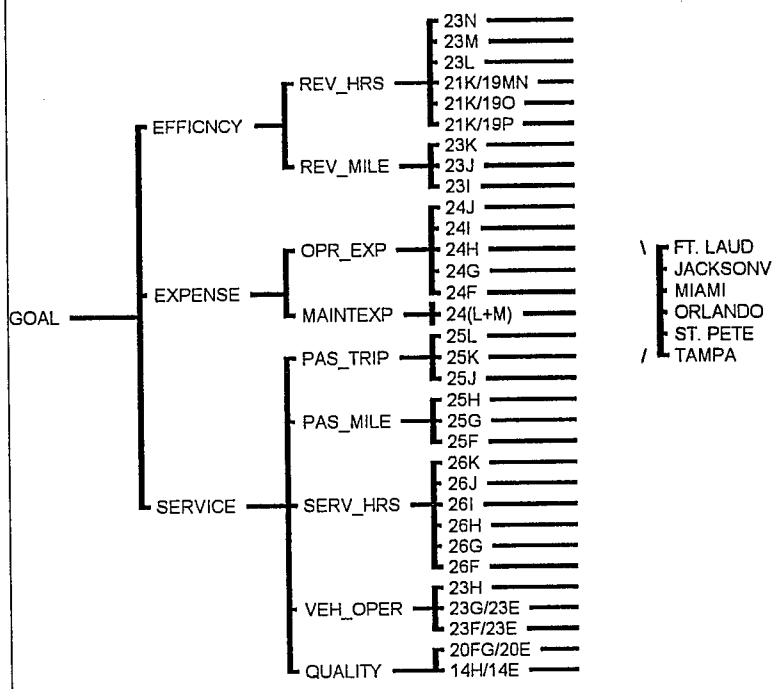

Abbreviation	Definition
14H/14E	No. of service interruptions per veh. operated in max. service
20FG/20E	No. of incidents per vehicle operated in max. service
21J/19MN	Revenue hours per maintenance employee
21J/19O	Revenue hour per adminastrative employees
21J/19P	Revenue hours per total employees
21K/19MN	Revenue hours per maintenance employee
21K/19O	Revenue hour per adminastrative employees
21K/19P	Revenue hours per total employees
23F/23E	Max. No. of Veh. Operated in Average PM Peak Period

Runtime Author Version

Figure 3. Basic Decision Model for Ranking MTA's with VOMS >=100

23G/23E	Max. No. of Veh. Operated in Average Base Period
23H	Vehicles Operated in Max. Service Per Dir. Mile
23I	Ann. actual Veh. Revenue Miles per Veh. Operated in Max. Service
23J	Anal. actual Veh. Revenue Miles per Employee Work Hour
23K	Anal. actual Veh. Revenue Miles per Vehicle Revenue Hour
23L	Actual Veh. Revenue Hours per Direct Directional Mile
23M	Actual Veh. Revenue Hours per Vehicle Operated in Max. Service
23N	Actual Veh. Revenue Hour per Employee Work Hour
24(L+M)	Maintenance expenses per revenue mile
24F	Total Operating Expenses per Veh. Operated in Max. Service
24G	Total Operating Expenses per Vehicle Revenue Hour
24H	Total Operating Expenses per Unlinked Passanger Trips
24I	Total Operating Expenses per Passanger Mile
24J	Total Operating Expenses per Employee Work Hour
25F	Annual Pass. Miles per Directional Mile
25G	Annual Pass. Miles per Veh. Operated in Max. Service
25H	Annual Pass. Miles per Vehicle Revenue Hour
25J	Annual Unlinked Pass. Trips per actual Veh. Revenue Mile
25K	Annual Unlinked Pass. Trips per Employee Work Hour
25L	Annual Unlinked Pass. Trips per Vehicle Revenue Hour
26F	Vehicle Operations per Vehivle Operated in Hours Maximum Service
26G	Vehicle Hours per Vehicle Operated in Maintenance Max. Service
26H	Non-vehicle Hours per Veh. Operated in Maintenance Max. Service
26I	Administration per Vehicle Operated in Hours Max. Service
26J	Capital per Vehicle Operated in Hours Maximum Service
26K	Total System Vehicles Operated in Hours per Max. Service
EFFICNCY	Maximize Operational Efficiency
EXPENSE	Minimize Expenses
FT. LAUD	Ft. Lauderdale - Bct
JACKSONV	Jacksonville _ JTA
MAINTEXP	Maintenance expenses
MIAMI	Miami - MDTA
OPR_EXP	Operating expenses
ORLANDO	Orlando - LYNX
PAS_MILE	Passanger Miles
PAS_TRIP	Passanger Trips
QUALITY	Service quality (safety and service interruptions)

Runtime Author Version

Figure 3. Basic Decision Model for Ranking MTA's with VOMS >=100

REV_HRS	Revenue Hours
REV_MILE	Revenue Miles
SERVICE	Maximize service availability and consumption
SERV_HRS	Directly operated service hours
ST. PETE	St. Petersburg - PSTA
ST. PETE	St. Petersburg - PSTA
TAMPA	Tampa - Hatline
VEH_OPER	Vehicles operated

Runtime Author Version

Fig 4. Model for Assessing Performance Trend of Miami-MDTA

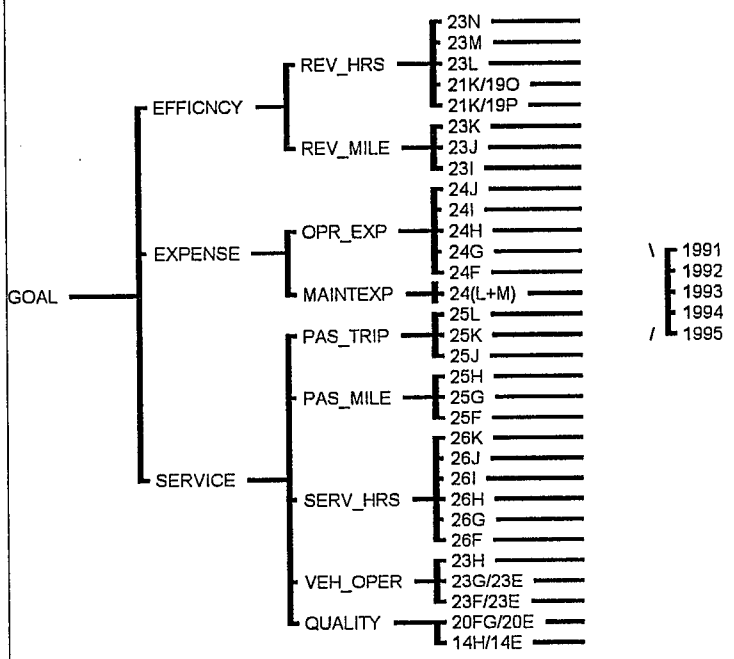

Abbreviation	Definition
14H/14E	No. of service interruptions per veh. operated in max. service
1991	Performance in 1991
1992	Performance in 1992
1993	Performance in 1993
1994	Performance in 1994
1995	Performance in 1995
20FG/20E	No. of incidents per vehicle operated in max. service
21J/19MN	Revenue hours per maintenance employee
21J/19O	Revenue hour per adminastrative employees
21J/19P	Revenue hours per total employees

Runtime Author Version

Fig 4. Model for Assessing Performance Trend of Miami-MDTA

21K/19MN	Revenue hours per maintenance employee
21K/19O	Revenue hour per adminastrative employees
21K/19P	Revenue hours per total employees
23F/23E	Max. No. of Veh. Operated in Average PM Peak Period
23G/23E	Max. No. of Veh. Operated in Average Base Period
23H	Vehicles Operated in Max. Service Per Dir. Mile
23I	Ann. actual Veh. Revenue Miles per Veh. Operated in Max. Service
23J	Anal. actual Veh. Revenue Miles per Employee Work Hour
23K	Anal. actual Veh. Revenue Miles per Vehicle Revenue Hour
23L	Actual Veh. Revenue Hours per Direct Directional Mile
23M	Actual Veh. Revenue Hours per Vehicle Operated in Max. Service
23N	Actual Veh. Revenue Hour per Employee Work Hour
24(L+M)	Maintenance expenses per revenue mile
24F	Total Operating Expenses per Veh. Operated in Max. Service
24G	Total Operating Expenses per Vehicle Revenue Hour
24H	Total Operating Expenses per Unlinked Passanger Trips
24I	Total Operating Expenses per Passanger Mile
24J	Total Operating Expenses per Employee Work Hour
25F	Annual Pass. Miles per Directional Mile
25G	Annual Pass. Miles per Veh. Operated in Max. Service
25H	Annual Pass. Miles per Vehicle Revenue Hour
25J	Annual Unlinked Pass. Trips per actual Veh. Revenue Mile
25K	Annual Unlinked Pass. Trips per Employee Work Hour
25L	Annual Unlinked Pass. Trips per Vehicle Revenue Hour
26F	Vehicle Operations per Vehivle Operated in Hours Maximum Service
26G	Vehicle Hours per Vehicle Operated in Maintenance Max. Service
26H	Non-vehicle Hours per Veh. Operated in Maintenance Max. Service
26I	Administration per Vehicle Operated in Hours Max. Service
26J	Capital per Vehicle Operated in Hours Maximum Service
26K	Total System Vehicles Operated in Hours per Max. Service
EFFICNCY	Maximize Operational Efficiency
EXPENSE	Minimize Expenses
FT. LAUD	Ft. Lauderdale - Bct
JACKSONV	Jacksonville _ JTA
MAINTEXP	Maintenance expenses
MIAMI	Miami - MDTA
OPR_EXP	Operating expenses

Runtime Author Version

Fig 4. Model for Assessing Performance Trend of Miami-MDTA

ORLANDO	Orlando - LYNX
PAS_MILE	Passanger Miles
PAS_TRIP	Passanger Trips
QUALITY	Service quality (safety and service interruptions)
REV_HRS	Revenue Hours
REV_MILE	Revenue Miles
SERVICE	Maximize service availability and consumption
SERV_HRS	Directly operated service hours
ST. PETE	St. Petersburg - PSTA
ST. PETE	St. Petersburg - PSTA
TAMPA	Tampa - Hatline
VEH_OPER	Vehicles operated

Runtime Author Version

3. TRANSIT SYSTEMS PERFORMANCE EVALUATION (Ranking Mass Transit Agencies)

The bibliography by Long (1983) contained studies on transit systems performance evaluation. Twelve of the 394 publications pertained to transit systems performance evaluation using Section 15 (NTD) data. Amongst others, Mundle and Cherwony(1980), Hobieka et. al. (1984) and Carter and Lomax(1992) have applied the traditional *uncontrolled* peer group comparison approach of transit performance. The former two efforts have also applied the *controlled* comparison concept.

3.1 National Data Analysis Tool

Under contract with the FTA, the Volpe National Transportation Systems Center has developed the analytic tool, The National Transit Analysis Tool (NTAT), for transit operators, planners, and researchers to use to analyze the performance and derive key operational and financial data for U.S. public transit systems contributing data to the NTD. Performance can be evaluated for individual operators or peer groups, for a single year or in three year trends. The software may be downloaded from:

http://www.flt.dotgov/fta/library/reference/sec15/NTAT/

3.2 Current Comparison Approaches

UNCONTROLLED COMPARISON is the traditional approach in which the subject transit system's performance is compared with the arithmetic average performance of peer systems for each performance index. For example, Carter and Lomax used standardized index value to compare the performance of individual systems. Thus,

$$\lambda_{ij} = (V_{ij} - \mu_i) / \sigma_i \qquad i = 1, I \qquad (3.1)$$

where

λ_{ij} = standard score for the i th performance index and the j th System
V_{ij} = performance index value for the i th performance index for the j th System
μ_i = peer group mean for the i th performance index
σ_i = peer group standard deviation for the i th performance index

A standard score above zero represents an above average performance for the system and conversely a below zero score represents a below average performance with respect to the given index representing a desirable measure. Cost-effectiveness, service utilization, vehicle utilization, and accessibility were used to define performance. The corresponding indices used were: passenger per dollar, miles per dollar, passengers per mile, miles per vehicle, and miles per capita. They applied the above methodology to data from rural transit operators in Texas. Using

uncontrolled comparison, one may only conclude that the system of interest performed better or worse than the peer average for that particular index.

CONTROLLED COMPARISON is performed by comparing the actual performance of the target system with the expected performance of the peer group. Typically the expected performance is obtained from a regression of the performance index, as the independent variable, and certain variables which are known to influence it as the explanatory variables.

COMBINATION OF THE UNCONTROLLED AND CONTROLLED COMPARISON Mundle and Cherwony noted that the simple (uncontrolled) comparison technique did not account for differences in system operating characteristics and environments among the peer group members. Controlled comparison has the disadvantage that it does not relate performance relative to the system. They combined the two techniques approaches to derive the following four possible categories of a transit system performance:

1) Better than average and better than expected,
2) Better than average and worse than expected,
3) Worse than average but better than expected,
4) Worse than average and worse than expected.

They applied this combined technique to eleven (11) bus depots in the NY Transit Authority using locally developed transportation and maintenance indices.

Hobieka et. al. (1984) have applied this technique using UMTA Section 15 (now NTD) data for transit systems with 25 to 99 vehicles. They defined a set of indices related to the cost, demand and revenues for bus systems. Each index was defined as the ratio of the difference between the actual and the expected performance measures to the expected performance measure. A positive index value meant that the bus system performed better than its expected performance while a negative index value will indicate the converse conclusion. With the above methods the analyst can only perform an implicit ranking of a set of systems.

None of the above studies presented a way to combine the standard scores for each index into an overall index with which to uniquely rank members of the peer group.

3.3 Ranking MTA's based on their Relative Performance

3.3.1 USING EXPERT CHOICE SOFTWARE

Models 1 and 2 were coded into EC and given in Figures 2 and 3 above. The following weight distributions were assigned to the main (level 1) objectives. EC divides these weights evenly between sub-objectives down to the lowest level objectives. For each combination of weights, runs were made for each peer group and for each year with the MTA's in each peer group considered as "alternatives".

Level 1 Objective → Combination I	Efficiency	Expenses	Service
I	0.33	0.33	0.33
II	1.0	0.0	0.0
III	0.0	1.0	0.0
IV	0.0	0.0	1.0

In combination I, the main objectives were considered equally important, in combination II only the efficiency objective was considered, and so on. Runs were made with each of these combination of weights for illustrative purposes. In real world situations, weights should be assigned to each attribute by the group of stakeholders.

Figure 5. shows result for peer group I and weights combination I as printed out from EC. The relative performance of the members of the group are shown in rank order with Fort Myers being top ranked with a 13.4 % relative performance. Table 5 shows result for peer group I while Table 6 shows result for peer group II for all four combination of weights. The weights are given as decimal fractions while the relative performances are given in percentages. The percentages for all members of each peer group sum up to 100. For example, for 1993 in Table 5, Jacksonville had the best overall relative performance when the three main objectives had equal weights and when only the minimization of expenses is considered, St. Petersburg had the best relative performance when only cost efficiency maximization was considered, and Miami had the best relative performance when only service maximization was considered.

namic Sensitivity w.r.t. GOAL for nodes below GO

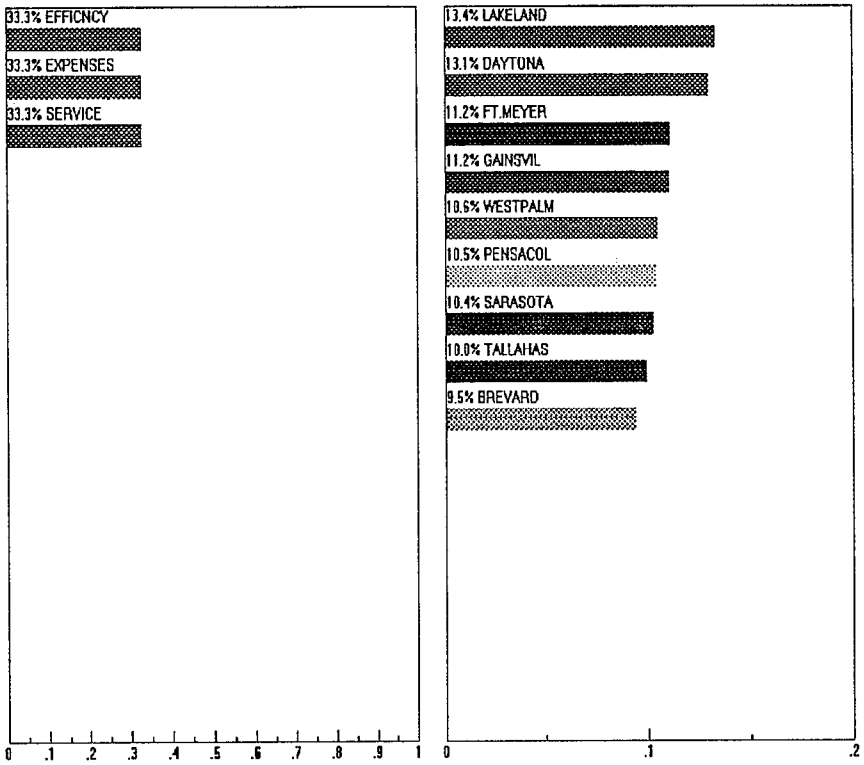

Abbreviation	Definition
EFFICNCY	Maximize Operational Efficiency
EXPENSES	Minimize Expenses
SERVICE	Maximize availability and consumption

LAKELAND	Lakeland-Citrus Connect
DAYTONA	Daytona Beach - VOTRAN
FT.MEYER	Ft. Meyers-Lee - TRAN
GAINSVIL	Gainsville - RTS
WESTPALM	West Palm-CO TRAN
PENSACOL	Pensacola - ECTS
SARASOTA	Sarasota - SCTA
TALLAHAS	Tallahassee - TALTRAN
BREVARD	Brevard - SCAT

Distributive Mode

Runtime Author Version

Table 5. Relative Performance Evaluation Using Expert Choice Software

(MTA's with VOMS <100)

MEASURES			Mass Transit Systems (MTAs)								
Efficiency	Expenses	Service	Brevard	Daytona	Ft. Myers	Gainesville	Lakeland	Pensacola	Sarasota	Tallahassee	West Palm
							1992				
0.33	0.33	0.33	8.9	12.2	10.7	10.8	**13.9**	10.0	11.0	11.3	11.3
1.00	0.00	0.00	11.6	10.7	11.1	10.2	**12.0**	11.4	11.9	10.1	10.9
0.00	1.00	0.00	9.7	**15.6**	9.7	12.0	15.5	8.2	12.0	8.8	8.5
0.00	0.00	1.00	5.3	10.1	11.4	10.1	14.2	10.3	9.0	**15.0**	12.6
							1993				
0.33	0.33	0.33	8.7	12.2	11.8	11.5	12.5	9.5	11.1	11.7	10.9
1.00	0.00	0.00	11.1	10.3	11.9	11.6	11.6	10.8	11.2	10.2	11.3
0.00	1.00	0.00	9.5	15.2	11.4	11.2	15.6	8.5	11.4	8.2	9.0
0.00	0.00	1.00	4.9	11.0	12.3	11.8	9.8	9.2	10.8	17.6	12.6
							1994				
0.33	0.33	0.33	8.9	12.6	11.6	**11.6**	12.9	10.9	9.9	10.5	11.0
1.00	0.00	0.00	8.3	11.4	12.6	**11.5**	14.4	10.2	10.7	9.5	11.4
0.00	1.00	0.00	10.1	15.2	11.1	**12.2**	15.6	8.7	11.7	7.9	7.77
0.00	0.00	1.00	8.4	11.3	**11.3**	11.0	8.8	13.9	7.2	14.1	14.0
							1995				
0.33	0.33	0.33	7.5	11.6	**18.3**	11.6	11.3	9.3	11.1	9.6	9.6
1.00	0.00	0.00	9.0	10.0	**25.8**	10.0	8.6	8.9	9.3	8.3	10.0
0.00	1.00	0.00	9.9	**15.0**	10.9	11.5	15.0	9.1	12.5	8.2	7.9
0.00	0.00	1.00	3.7	10.0	**18.2**	13.4	10.2	9.9	11.6	12.1	10.9

Table 6. Relative Performance Evaluation Using Expert Choice Software

(MTA's with VOMS >100)

MEASURES			Mass Transit Systems (MTAs)					
Efficiency	Expenses	Service	Ft. Laud.	JAX	Miami	Orlando	St. Pete	Tampa
				1991				
0.33	0.33	0.33	15.5	15.6	15.6	**19.8**	19.0	14.5
1.00	0.00	0.00	17.4	15.7	16.2	**19.1**	16.8	14.8
0.00	1.00	0.00	13.2	16.2	11.8	18.0	**24.1**	16.7
0.00	0.00	1.00	16.0	14.7	18.8	**22.4**	16.0	12.0
				1992				
0.33	0.33	0.33	17.2	16.8	15.5	**19.3**	16.3	14.9
1.00	0.00	0.00	**19.3**	15.7	15.4	18.3	16.1	15.2
0.00	1.00	0.00	14.3	17.7	12.7	**20.8**	17.7	16.9
0.00	0.00	1.00	18.1	16.7	18.5	**18.8**	15.1	12.6
				1993				
0.33	0.33	0.33	16.8	**18.1**	17.0	17.7	15.7	14.7
1.00	0.00	0.00	17.3	16.6	16.6	17.8	**18.1**	13.6
0.00	1.00	0.00	15.0	**19.1**	13.3	18.9	16.5	17.2
0.00	0.00	1.00	18.0	18.6	**21.1**	16.4	12.6	13.3
				1994				
0.33	0.33	0.33	17.9	13.4	17.2	**19.7**	16.6	15.1
1.00	0.00	0.00	17.5	17.1	16.5	**17.8**	17.4	13.8
0.00	1.00	0.00	17.8	6.5	14.3	**21.8**	20.0	19.7
0.00	0.00	1.00	18.4	16.8	**20.8**	19.7	12.5	11.9
				1995				
0.33	0.33	0.33	14.7	16.6	**21.1**	17.7	15.9	13.9
1.00	0.00	0.00	14.9	15.4	**21.4**	16.5	17.9	13.8
0.00	1.00	0.00	14.9	**19.5**	13.1	18.8	17.5	16.2
0.00	0.00	1.00	14.3	14.9	**28.9**	17.7	12.5	11.7

3.3.2 USING SPREADSHEET SOFTWARE (EXCEL)

Using the additivity assumption, the relative performance, S_j, of the jth MTA is given as the sum, over all the attributes, of the product of the weight assigned to the attribute and the index value of the attribute. S_j is defined such that the larger its value the better the relative performance of the MTA. i.e. the overall decision problem is a maximization problem.

$$S_j = \sum_{i=1}\sum_{k=1} w_{ki} \cdot \lambda_{kij} \qquad k = 1, K_i \quad , \quad i = 1, I \tag{3.2}$$

where K_i = number of attributes describing the ith lowest level objective, w_{ki} = weight assigned to the kth attribute of the ith lowest level objective, λ_{kij} is the standardized (normalized) index value of the kth attribute of the ith objective for the jth MTA. The expression for λ_{kij} may take one of the following forms.

Reduced Variate Approach: This is a direct extension of the uncontrolled comparison approach described in Section 3.2 above. Equation 2.1 is rewritten below for the kth attribute of the ith lowest level objective.

$$\lambda_{kij} = b_{ki} [(V_{kij} - \mu_{ki}) / \sigma_{ki}] \tag{3.3}$$

where

b_{ki}	=	1 for an attribute where larger index values represent more desirable outcomes
	=	-1 for an attribute where larger index values represent less desirable outcomes
λ_{kij}	=	reduced variate of the kth attribute for the i th objective and the j th MTA
V_{kij}	=	performance index value of the kth attribute for the i th objective for the j th MTA
μ_{ki}	=	peer group mean for the kth attribute and the i th objective
σ_{ki}	=	peer group standard deviation for the kth attribute of the ith objective

Interval Scale Approach: The interval scale values are obtained by converting the performance index value scale as follows:

$$\lambda_{kij} = (V_{kij} - V_{ki}(min))/(V_{ki}(max) - V_{ki}(min)) \tag{3.4}$$

for attributes where larger index values represent more desirable outcomes. $V_{ki}(min)$ and $V_{ki}(max)$ are the smallest and largest values, respectively, of the kth attribute among the peer group.

$$\lambda_{kij} = (V_{kij} - V_{ki}(max))/(V_{ki}(min) - V_{ki}(max)) \tag{3.5}$$

for attributes where larger values represent less desirable outcomes. An advantage of this approach is that the normalization of data results in positive values with the least desirable normalized value of the attribute being zero (0) and the most desirable value being 1. ($0 \leq \lambda \leq 1$)

Inversion Approach: The inversion approach calculates the priorities by normalizing the data by dividing each data entry by the sum of the entries for the competing MTA's when larger values of the performance index represents more desirable outcomes.

$$\lambda_{kij} = V_{kij} / \sum_{J=1} V_{kij} \qquad j = 1, J \qquad (3.6)$$

where J = number of MTS's in the peer group. The entries are inverted when larger values represent less desirable outcomes. Thus,

$$U_{kij} = 1/V_{kij} \qquad (3.7)$$

$$\lambda_{kij} = U_{kij} /(\sum_{J=1} U_{kij}) \qquad j = 1, J \qquad (3.8)$$

The Expert Choice software uses the inversion approach to normalize data.

Spreadsheet Application of Approaches: The weights were assigned equal value of 1/(32) since there is a total of 32 attributes i.e. w_{ki} = 1/32 = 0.03125. The relative performance and rank of the MTA's in each per group are tabulated in Table 7 for each of the approaches. The last column of the table contains results obtained from applying the EC software. To ensure that each attribute was weighted equally at 0.03125, we assigned the weights of 0.281, 0.187 and 0.532, respectively, for the level I objectives: maximize cost efficiency, minimize system expenses and maximize service. An inspection of the table shows that there is general correspondence in the ranking based on the four approaches investigated particularly for the peer group II MTA's. The reduced variate and interval scale approaches gave the same rankings of the transit agencies in all but the Miami and Orlando MTA's. For these two there was a reversal of one place in the rankings. Ranks from the EC and the ratio scale approach appear to correspond better. In practical decision making these rankings will be used in addition to other consideration to make a final determination of any performance based revenue allocation.

3.3.3 SOFTWARE TOOLS (MATHCAD SOLUTION)

A MATHCAD code for implementing the relative performance evaluation computations using equations 3.2 through 3.7 was developed and has been included in Appendix I. Data on six (6) of the original set of the 32 attributes was used to compare the performance of the six (6) peer group II Mass Transit Agencies. The code is transparent and can easily be adapted for implementation on other software tools such as MATLAB, TK Solver, Maple or Mathematica.

Table 7. Relative Performance Evaluation Using Expert Choice Software, Spreadsheet Software [1994 Data]

Peer Group	Mass Transit Agency	Reduced Variate Approach		Interval Scale Approach		Ratio Scale Approach		Expert Choice Software	
		Rel Perform	Rank	Rel Perform	Rank	Rel Perform	Rank	Rel Perform	Rank
I	Brevard-SCAT	-25.50	9	8.45	9	2.23	9	7.30	9
	Daytona -VOTRAN	14.70	1	20.07	1	4.34	1	12.10	3
	Ft. Myers-LeeTran	7.90	3	18.61	3	3.13	6	11.20	6
	Gainesville-RTS	0.50	4	15.79	4	3.08	7	11.00	7
	Lakeland-Citrus	13.20	2	20.00	2	3.55	3	11.30	5
	Pensacola-ECTS	-4.80	8	14.25	8	3.32	5	11.80	4
	Sarasota-SCTA	-2.50	6	14.88	6	2.95	8	9.40	8
	Tallahassee-TALTRAN	-0.60	5	15.05	5	3.52	4	12.50	2
	West Palm-CoTran	-2.70	7	14.67	7	3.89	2	13.50	1
II	Ft. Lauderdale-BCT	13.50	1	21.40	1	5.71	2	18.00	3
	Jacksonville-JTA	-18.10	6	8.80	6	4.13	6	15.20	5
	Miami-MDTA	6.00	3	18.70	2	6.31	1	20.20	1
	Orlando-LYNX	7.00	2	18.60	3	5.70	3	18.20	2
	St. Petersburg-PSTA	2.10	4	16.50	4	4.60	4	14.80	4
	Tampa-Hartline	-10.50	5	11.50	5	4.55	5	13.60	6

4. TRANSIT SYSTEMS EVALUATION [Assessing Performance Trend]

In the context of this project, Panel data is defined as a set of attribute values obtained for a given MTA at two or more points in time. Specifically, the data was obtained for 15 MTA's over five years, 1991-1995. The focus here is analysis of the data sets using the EC software package as opposed to problems of panel sampling or design. A comprehensive analysis would include description, evaluation and explanation of the time changes in the relative performance of the MTA. Results from running EC may be used to describe and evaluate the trend. Explanation of the observations from the results will usually be based on first hand knowledge of a host of operating and non-operating factors beyond the modeling results. Thus, no attempts are made at such explanations.

To facilitate the description and explanation of the trends, the combinations of weights of the main (level 1) objectives as defined in section 3 of this report were used. Thus, combination I is the case when the main objectives were considered equally important, combination II is the case when only the efficiency objective was considered, combination III is the case when only the expense minimization objective was considered and combination IV is the case when only the service maximization objective was considered. The trend resulting from combination I was considered as the **gross** trend. Runs were made with each of these combination of weights using the years as "alternatives". Table 8 contains results for relative performance of selected MTA's over the five year period 1991-1995. As an example, the result for Miami-MDTA is plotted and shown in Figure 6. The table below shows the same results in terms of the rankings of the yearly performances.

Combination	1991	1992	1993	1994	1995
I	1	3	4	5	2
II	1	2	4	5	3
III	1	4	3	5	2
IV	5	3	4	2	1

The results show a uniformly decreasing performance trend for efficiency measures in 1991 through 1994. The same observation may be made for the gross trend which closely follows the trend for the efficiency measures indicating that these set of attributes appear to dominate. In contrast, expense measures performed better. The MTA showed improved performance in all three main objectives and hence in overall performance from 1994 to 1995. In 1993 relative performance was about the same for all four combinations. No significance is attached to this observation since relativity of performance is considered in time rather across the combinations.

Figure 6. Performance Trend for Miami-MDTA (1991-1995)

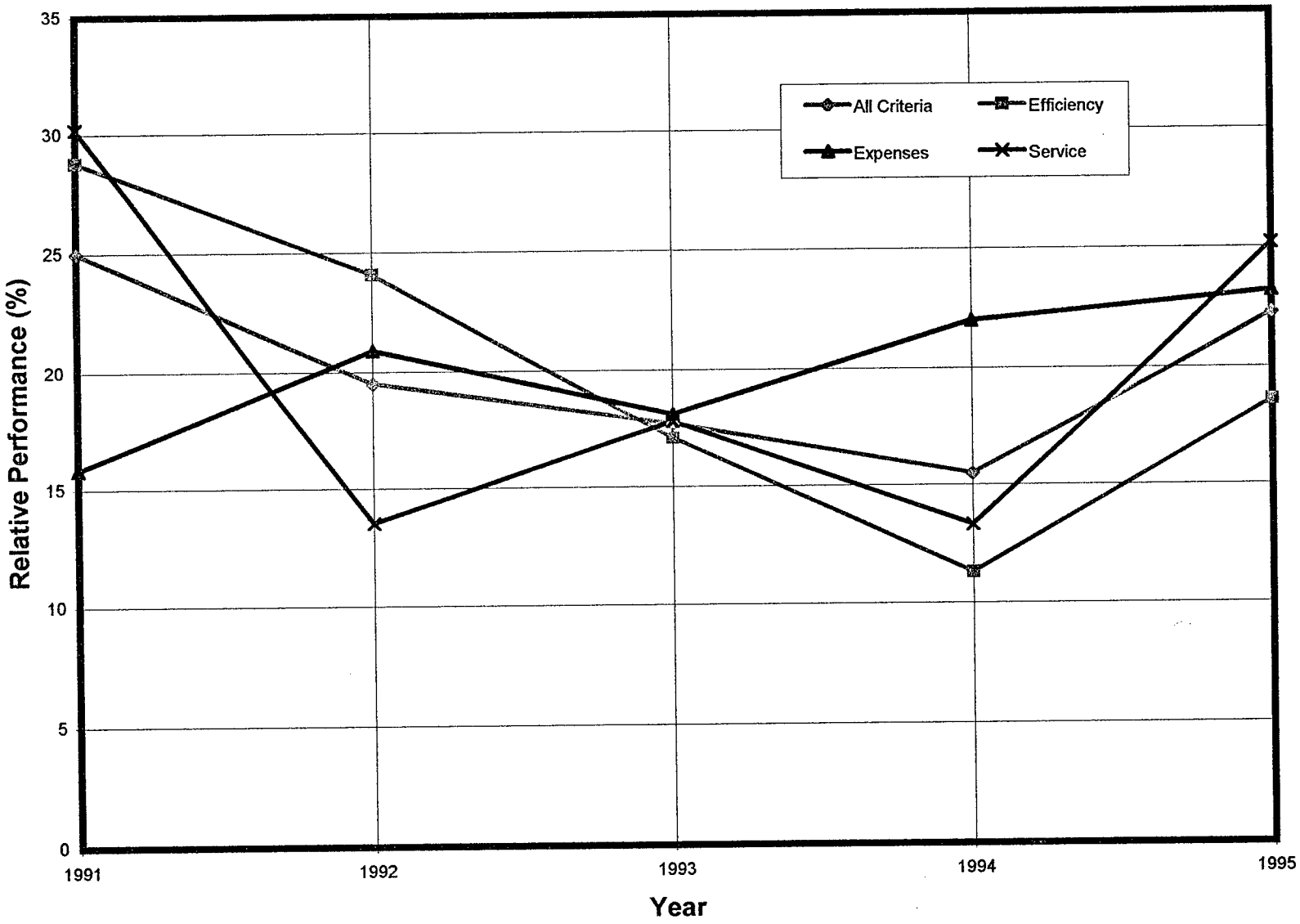

Table 8. Relative performance of Selected MTA's over a five year period (1991-1995)

MASS TRANSIT	MEASURES			YEAR				
AGENCY	Efficiency	Expense	Service	1991	1992	1993	1994	1995
	0.33	0.33	0.33	22.5	21.2	18.9	19.6	17.9
Daytona	1.0	0.0	0.0	30.3	27.8	14.9	12.8	14.2
	0.0	1.0	0.0	14.9	19.2	16.3	29.0	20.6
	0.0	0.0	1.0	22.2	16.5	25.4	17.0	19.0
	0.33	0.33	0.33	27.2	21.3	18.9	13.2	19.4
Ft. Lauderdale	1.0	0.0	0.0	32.8	26.1	14.6	11.9	14.7
	0.0	1.0	0.0	21.0	19.4	17.2	19.8	22.5
	0.0	0.0	1.0	27.9	18.4	24.8	7.8	21.0
	0.33	0.33	0.33	25.0	19.5	17.7	15.5	22.3
Miami	1.0	0.0	0.0	28.8	24.1	17.1	11.3	18.6
	0.0	1.0	0.0	15.8	20.9	18.1	22.0	23.2
	0.0	0.0	1.0	30.2	13.5	17.8	13.3	25.2
	0.33	0.33	0.33	29.4	20.7	16.0	15.7	18.2
Orlando	1.0	0.0	0.0	37.3	25.2	12.7	11.8	13.0
	0.0	1.0	0.0	17.0	21.7	18.0	20.8	22.6
	0.0	0.0	1.0	33.8	15.2	17.3	14.6	19.2
	0.33	0.33	0.33	31.8	19.8	16.4	15.6	16.3
St. Petersburg	1.0	0.0	0.0	38.8	22.1	14.2	12.3	12.6
	0.0	1.0	0.0	20.6	20.1	16.5	21.2	21.5
	0.0	0.0	1.0	36.1	17.3	18.4	13.4	14.8

5. CONCLUSION

The Expert Choice (EC) software was used to obtain ranking of a set of Florida mass transit agencies and to assess the performance trend of some of these agencies using data abstracted from the National Transit Database. Changes of data format over the years created some difficulties when assessing performance trend. This variation of data format posed minimum difficulties with the ranking model. The ranking model was coded in the Microsoft Excel Spreadsheet and Mathcad environments. Three methods for standardizing index values were coded into the programs. The rankings produced by these methods closely corresponded with those produced by EC. In practical decision making these rankings will be used in addition to other consideration to make a final determination of any performance based revenue allocation. A major contribution of this study is that all three approaches (EC, Excel program, Mathcad program) combined the standard scores for each performance index into an overall index with which to rank transit agencies.

An advantage of using EC is that it allows the user to perform a multiplicity of analysis with one formulation and to use any combination of performance indices, also in the same formulation, simply by assigning a zero weight to the lowest level objective's attribute measured by the index. One may also perform a variety of sensitivity analysis on-line for a given formulation.

The performance trend assessment allows the analyst to determine in which time segments change in performance occurred, whether the change is local or global within the time frame of the review, whether the changes in one period are different from those in another period, and whether two sets of different performance measures create the same pattern of change in the relative performance of an MTA.

Though the emphasis in this project has been on relative performance of the MTA's, the Rating model can be readily formulated for these MTA's when the objective is to compare the overall performances of the individual MTA's against given performance standards for each measure. Comparisons provide standards against which each operator can evaluate itself and use to target aspects (service, cost efficiency, expenses) of performance the improve.

6. REFERENCES

Algahdi, S. A., *Evaluation of Performance of Riyadh Urban Public Transportation Service,* Transportation Research Record, Vol 1433 pp 10-15, 1994.

Allen, W. G. and L. G. Grimm, *Development and Application of Performance Measures for a Medium-Sized Transit System*, Transportation Research Record, Vol 746, pp 8 - 12, 1980.

Austin, J. A. and T. J. Stone, *The Application of Statistical Control Measures to Transit Performance Indicators*, Journal of Advanced Transportation, Vol 14(3) 1980, pp 213-236.

Carter, D. N. and T. J. Lomax. *Development and Application of Performance Measures for Rural Public Transportation Operators,* Transportation Research Record, Vol 1338, pp 28-36, 1992.

Federal Transit Administration, *An Introduction To The Section 15 Program : The National Transit Database,* U.S. Government Printing Office: 1993-0-701-367, May 1993.

Fielding, G. J. *Using Section 15 Data: Adapting and Evaluating the Magnetic Tape Version for Statistical Analysis*, Transportation Research Record, Volume 961, pp 28-35, 1984.

Henderson, G. P. Kwong and H. Adkins. *Regularity Indices for Evaluating Transit Performance*, Transportation Research Record, Vol 1297, pp 3-9, 1991.

Hobeika, A. G., C. Kanok-Kantapong and T.K. Tran. *A Methodology for Comparative Transit Performance Evaluation with UMTA Section 15 Data,* Transportation Research Record Vol 961, pp 36-43, 1984.

Holec, J. M., D.S. Schwager and A. Fandialan. *Use of Federal Section 15 Data in Transit Performance Evaluation: Michigan Program.* In Transportation Research Record 746, pp 36-38, 1980.

Holec, J.M. D.S. Schwagner and M.J. Gallagher. *Improving Usefulness of Section 15 Data for Public Transit* Transportation Research Record Vol 835, pp 9-15, 1981

Huang, W. J. and R. L. Smith, Jr. *Development of Cost-Effective Sampling Plans for Section 15 and Operational Planning Ride Checks: Case Study for Madison, Wisconsin,* Transportation Research Record, Vol 1402, pp 82-89, 1993.

Lyons, W. M., *Analysis of Nine European Public Transit Databases: Insights for the Urban Mass Transportation Administration Section 15 Program,* Transportation Research Record, pp 24-33, 1987.

Lyons, W. M. and E. R. Fleischman. *New Future for Federal Transit Administration Section 15 Program,* Transportation Research Record, Vol 1349 pp 18-27, 1992.

Marshment, R. S., *Measuring Cost-Effectiveness of Rail Transit Projects,* Transportation Research Record, Vol 1349, pp 28-32, 1992.

Material Computers and Communications Inc.(1995) *Section 15 Performance Profiles: Research in Progress*, Federal Transit Administration, Transit Research Abstracts, Volume 13, Report Number FTA-DC-26-7035, Sep 1995, page 309.

Miller, J. H., *The Use of Performance - Based Methodologies for the Allocation of Transit Operating Funds*, Traffic Quarterly, Vol 34 (4), pp 555-574, 1980.

Mundle, S. R. and W. Cherwony. *Diagnostic Tools in Transit Management*, Transportation Research Record Vol 746, pp 13-18, 1980.
Owens, E. L. *Utilization of Section 15 Data by State Governments*, Prepared for the 62nd Annual meeting of the Transportation Research board, Washington, D.C. January 22, 1980.
Post Buckley Schuh and Jernigan, Inc, *Florida Transit System Performance measures and Standards*, Report prepared for the Florida Department of Transportation, Public Transportation Operations division, Tallahassee, Florida, 1979, 144 p.
Public Technology Inc. *Proceedings of the First national Conference Transit Performance*, Urban Mass Transit Administration, Technical Report UMTA-DC-06-0184-77-1, 1977
Pucher, J., *Allocating Federal Transit Subsidies: A Critical Analysis of Alternatives*, Transportation Research Record, Vol 967, pp 14-23, 1987.
Sindzinski, J. *Do Performance Audits - Audit Performance?* , Transportation Research Record, Vol 961, pp 8-12, 1985.
Vaziri, A. and J.A. Deacon. *Peer Comparisons in Transit Performance Evaluation.* Transportation Research Record Vol. 961, pp 13-20, 1984.
Younger, K.E., *Multi-modal Project Evaluation: A Common Framework, Different Methods.* Transportation Research Record, Vol 1429, pp 24-29, 1994.

APPENDIX 1.

Mathcad Program for Evaluating the Overall Relative Performance and the Ranking of Mass Transit Agencies

MATHCAD Program for Evaluation of Relative Performance of Mass transit Agencies

****

The program is an implementation of Equation 3.2 for the each of the three methods of calculating relative performace scores: reduced variate (Equation 3.3, case M=1 in the program), Interval method (Equations 3.4 and 3.5, M=2) and for the Inversion method (Equations 3.6 - 3.8, M=3)

Definition of variables:

$\beta(k)$ = 1 for the k th attribute where larger index values represent more desirable outcomes
= -1 for the k th attribute where larger index values represent less desirable outcomes
$w(k)$ = weight assigned to the k th performance index
$V(k,j)$ = perfromance index value of the k th attribute and the j th MTA
$\lambda(k,j)$ = standardized attribute value = $u(k,j)$ when M=1, $w(k,j)$ when M=2 , $z(k,j)$ when M=3
$\mu(k)$ = k th attribute peer group mean
$\sigma(k)$ = k th attribute peer group standard deviation

mta (j) = name of the j th MTA. There are **J** MTA's and **K** attributes
q(j) = ra nk of the j th MTA, rank corresponds to the initial order of listing of the MTA at the start of the run

Attributes used in illustrative example:	**Row**
Annual passenger mile per vehicle at maximum service (25G)	1
Total system hours per vehicle operated in maximum service (26K)	2
Annual actual vehicle miles per vehicle operated at maximum service(23I)	3
Operating expenses per revenue hour (24G)	4
Operating Expenses per passenger trip (24H)	5
Operating expenses per passenger mile (24I)	6

Mass Transit Agencies (MTAs) used in illustrative example:	**Column**
Fort Lauderdale - BCT	1
Jacksonville - JTA	2
Miami - MDTA	3
Orlando -LYNX	4
St. Petersburg - PSTA	5
Tampa - Hartline	6

****

ORIGIN≡1

$$\beta := \begin{bmatrix} 1 \\ 1 \\ 1 \\ -1 \\ -1 \\ -1 \end{bmatrix} \qquad mta := \begin{bmatrix} \text{"Ft Laud"} \\ \text{"Jax"} \\ \text{"Miami"} \\ \text{"Orlando"} \\ \text{"St Pete"} \\ \text{"Tampa"} \end{bmatrix} \qquad V := \begin{bmatrix} 703.3 & 333.2 & 501.4 & 592.3 & 386.7 & 374 \\ 8884 & 6530 & 8092 & 7383 & 7029 & 7481 \\ 59311 & 46415 & 46033 & 59127 & 62095 & 48310 \\ 61 & 46 & 66 & 51 & 52 & 56 \\ 1.752 & 2.464 & 1.938 & 2.277 & 2.859 & 2.329 \\ .376 & .471 & .489 & .359 & .577 & .525 \end{bmatrix}$$

$$
\begin{aligned}
P(V,K,J,M,mta) := \;& \text{for } k \in 1..K \\
& \quad sy_k \leftarrow \left[\sum_{m=1}^{J} \left(\frac{1}{V_{k,m}}\right)\right] \text{ if } \beta_k = -1 \\
& \quad sx_k \leftarrow \sum_{m=1}^{J} V_{k,m} \quad \text{otherwise} \\
& \quad \mu_k \leftarrow \text{mean}(\text{submatrix}(V,k,k,1,J)) \\
& \quad \sigma_k \leftarrow \text{var}(\text{submatrix}(V,k,k,1,J)) \\
& \quad \text{for } m \in 1..J \\
& \qquad q_m \leftarrow m \\
& \quad \text{for } j \in 1..J \\
& \qquad u_{k,j} \leftarrow \frac{V_{k,j} - \mu_k}{\sigma_k} \cdot \beta_k \\
& \qquad \text{if } \beta_k = -1 \\
& \qquad\quad y_{k,j} \leftarrow \frac{1}{V_{k,j}} \\
& \qquad\quad z_{k,j} \leftarrow \frac{y_{k,j}}{sy_k} \\
& \qquad\quad w_{k,j} \leftarrow \frac{V_{k,j} - \max(\text{submatrix}(V,k,k,1,J))}{\min(\text{submatrix}(V,k,k,1,J)) - \max(\text{submatrix}(V,k} \\
& \qquad \text{otherwise} \\
& \qquad\quad z_{k,j} \leftarrow \frac{V_{k,j}}{sx_k} \\
& \qquad\quad w_{k,j} \leftarrow \frac{V_{k,j} - \min(\text{submatrix}(V,k,k,1,J))}{\max(\text{submatrix}(V,k,k,1,J)) - \min(\text{submatrix}(V,k} \\
& \text{for } j \in 1..J \\
& \quad R_j \leftarrow \sum_{k=1}^{K} z_{k,j} \quad \text{if } M=1 \\
& \quad R_j \leftarrow \sum_{k=1}^{K} w_{k,j} \quad \text{if } M=2 \\
& \quad R_j \leftarrow \sum_{k=1}^{K} u_{k,j} \quad \text{if } M=3
\end{aligned}
$$

```
k = 1
for j ∈ 1..J - 1
    big ← R_j
    name ← mta_j
    for m ∈ j..J
        if R_m > big
            temp ← R_m
            tm ← q_m
            mt ← mta_m
            R_m ← R_j
            q_m ← q_j
            mta_m ← mta_j
            R_j ← temp
            q_j ← tm
            mta_j ← mt
            big ← R_j
            name ← mta_j
for j ∈ 1..J
    B_j,2 ← R_q_j
    B_j,1 ← mta_q_j
    B_j,3 ← q_j
for j ∈ 1..J - 1
    small ← B_j,2
    name ← B_j,1
    rnk ← B_j,3
    for m ∈ j..J
        if B_m,1 < name
            temp ← B_m,2
            ord ← B_m,3
            mt ← B_m,1
            B_m,2 ← B_j,2
            B_m,3 ← B_j,3
            B        B
```

$$
\left|\begin{array}{l}
B_{m,1} - B_{j,1} \\
B_{j,2} - \text{temp} \\
B_{j,3} - \text{ord} \\
B_{j,1} - \text{mt} \\
\text{small} - B_{j,2} \\
\text{name} - B_{j,1} \\
\text{rnk} - B_{j,3}
\end{array}\right|
$$

B

Relative Performance Analysis Results for Selected Attributes and Peer Group II MTA's

Method

Legend

Column 1 - MTA

Column 2 - Rel Sco

Column 3 - Rank

Reduced Variate

$$
P(V,6,6,1,\text{mta}) = \begin{bmatrix} \text{"Ft Laud"} & 1.184 & 1 \\ \text{"Jax"} & 0.911 & 5 \\ \text{"Miami"} & 0.977 & 3 \\ \text{"Orlando"} & 1.102 & 2 \\ \text{"St Pete"} & 0.917 & 4 \\ \text{"Tampa"} & 0.909 & 6 \end{bmatrix}
$$

Interval Scale

$$
P(V,6,6,2,\text{mta}) = \begin{bmatrix} \text{"Ft Laud"} & 4.999 & 1 \\ \text{"Jax"} & 1.867 & 6 \\ \text{"Miami"} & 2.354 & 3 \\ \text{"Orlando"} & 4.153 & 2 \\ \text{"St Pete"} & 2.057 & 4 \\ \text{"Tampa"} & 1.873 & 5 \end{bmatrix}
$$

Inversion

$$
P(V,6,6,3,\text{mta}) = \begin{bmatrix} \text{"Ft Laud"} & 19.006 & 1 \\ \text{"Jax"} & -2.125 & 4 \\ \text{"Miami"} & -1.46 & 3 \\ \text{"Orlando"} & 17.957 & 2 \\ \text{"St Pete"} & -23.063 & 6 \\ \text{"Tampa"} & -10.316 & 5 \end{bmatrix}
$$

APPENDIX 2.

1991 NTD Data Collated for Ranking Florida Mass Transit Agencies on the Basis of Overall Relative Performance

Revenue Vehicle Maintence Data for Florida Transit Agencies [Table 12, NTD*, 1991]

					<----Number of Roadcalls---->				<------Number of Light Maintenance----->					
									Facilities Serving					
Table ID	Transit Agency	ID Code	Mode	Total Vehicles Operated in Max. Service	Mechan-ical Failure	Other Reasons	Total Road-calls	Labor Hours for Inspection & Main-tenance	der ehicl	0-3 ehicl	er 3 hicl	Total Facil-ities	12H/12E	12I/12E
A	B	C	D	E	F	G	H	I	J	K	L	M	N	O
T12-91	Daytona Beach-VOTRAN	4032	Bus	34	229	111	340	30313	1			1	10.000	891.559
T12-91	Ft. Myers-LeeTran	4028	Bus	24	122	46	168	12203	1	0	0	1	7.000	508.458
T12-91	Gainesville-RTS	4030	Bus	32	174	573	747	9937	0.8			0.8	23.344	310.531
T12-91	Lakeland-Citrus Connect	4031	Bus	15	192	300	492	9338.3	1			1	32.800	622.553
T12-91	Pensacola-ECTS	4038	Bus	18	153	66	219	22672	1			1	12.167	1259.556
T12-91	Sarasota-SCTA	4046	Bus	19	291	327	618	8943	1			1	32.526	470.684
T12-91	Tallahassee-TALTRAN	4036	Bus	41	539	303	842	11667	0.8			0.8	20.537	284.561
T12-91	West Palm-CoTran	4037	Bus	58	653	114	767	26416	1			1	13.224	455.448
T12-91	Ft. Lauderdale-Bct	4029	Bus	155	3121	476	3597	186857	2			2	23.206	1205.529
T12-91	Jacksonville-JTA	4040	Bus	133	1500	90	1590	112784		1		1	11.955	848.000
T12-91	Miami-MDTA	4034	Bus	458	3549	1958	5507	301600	1	2		3	12.024	658.515
T12-91	Orlando-LYNX	4035	Bus	88	250	80	330	66840	1			1	3.750	759.545
T12-91	St. Petersburg-PSTA	4027	Bus	105	97	1326	1423	66520	1.8			1.8	13.552	633.524
T12-91	Tampa-Hartline	4041	Bus	140	1939	962	2901	73632	1	0	0	1	20.721	525.943

* National Transit Database

Transit System Emplyee Count for Florida Transit Agencies [Table 17, NTD*, 1991]

					<---------- Number of Operating Employee Equivalents---------->											
					<-------- Transportation--			<---------	----------Maintenance---------->				<-General Admin.->			
Table ID	Transit Agency	ID Code	Mode	Vehicles Operated n Max. ervic	Admin.	Rev. Veh. Oper.	Support	Veh. Maint. Admin.	Rev Veh Inspect. & Maint.	Rev. Ve Maint. Support	Non-Vehicl Maint. Admin.	Non-Vehicle Maint. Support	Mktg. & lannin	Support	Total	Total Capital Employee Equiv.
A	B	C	D	E	F	G	H	I	J	K	L	M	N	O	P	Q
T17-91	Daytona Beach-VOTRAN	4032	Bus	34	7.2	60	0.3	2.2	14.5	1.2	0	0.5	0.2	4.4	90.5	0
T17-91	Ft. Myers-LeeTran	4028	Bus	24	0.9	42.4	4.6	2	5.9	2.6	0	0	0.5	5.2	64.1	0
T17-91	Gainesville-RTS	4030	Bus	32	4.5	45.5	1	4	8.5	3	0	0	0	4.5	71	0
T17-91	Lakeland-Citrus Connect	4031	Bus	15	1.5	24.9	1	0.8	3.5	1	0	0	0.5	0.7	33.9	0.2
T17-91	Pensacola-ECTS	4038	Bus	18	2.7	30.6	1.7	2.1	10.9	2.8	0.4	0.4	0.2	4.4	56.2	0
T17-91	Sarasota-SCTA	4046	Bus	19	4.7	35.9	1.2	1.8	4.3	4.7	0	0.8	2.1	4.6	60.1	0
T17-91	Tallahassee-TALTRAN	4036	Bus	41	0.5	70	8	4	9	8.5	0	0	6.5	4.5	111	0
T17-91	West Palm-CoTran	4037	Bus	58	2.3	98	5.9	4.1	12.7	10.6	0.2	2.6	1.4	8.6	146.4	0
T17-91	Ft. Lauderdale-Bct	4029	Bus	155	32.9	427	6.2	27.4	89.8	26.7	0	8.3	31.8	38.2	688.1	0
T17-91	Jacksonville-JTA	4040	Bus	133	3	267	16.2	9.3	54.2	28.3	0	7.4	10.1	27.6	423.2	0
T17-91	Miami-MDTA	4034	Bus	458	24.5	1003	86.8	77.3	145	111.2	6.4	34.5	36.6	136.7	1662	1.9
T17-91	Orlando-LYNX	4035	Bus	88	4.3	187	11.7	5.2	32.1	5.8	0	5.5	11.9	18.6	281.9	0
T17-91	St. Petersburg-PSTA	4027	Bus	105	21.5	239	6.9	11.2	32	10	0.8	6.7	14.1	22.7	364.8	0
T17-91	Tampa-Hartline	4041	Bus	140	4.9	259	21.3	7.9	35.4	21.6	4.1	15	15	30	414.5	0

* National Transit Database

Transit Accidents Data for Florida Transit Agencies [Table 18, NTD*, 1991]

Table ID	Transit Agency	ID Code	Mod	Total Vehicles Operated in Max. Servic	<---Number of Accidents--- Collision	Non-Colli-sion	Station	<---Number of Fatalitie Patron	Non-atro	Total	<----Number of Injuries----> Patron	Non-Patron	Total	20FG/20E
A	B	C	D	E	F	G	H	I	J	K	L	M	N	
T18-91	Daytona Beach-VOTRAN	4032	Bus	34	5	50	0	0	0	0	51	0	51	1.618
T18-91	Ft. Myers-LeeTran	4028	Bus	24	1	13	3	0	0	0	13	3	16	0.583
T18-91	Gainesville-RTS	4030	Bus	32	36	20	0	0	0	0	11	5	16	1.750
T18-91	Lakeland-Citrus Connect	4031	Bus	15	9	6	0	0	0	0	4	0	4	1.000
T18-91	Pensacola-ECTS	4038	Bus	18	10	6	1	1	0	1	18	0	18	0.889
T18-91	Sarasota-SCTA	4046	Bus	19	14	14	0	0	0	0	20	5	25	1.474
T18-91	Tallahassee-TALTRAN	4036	Bus	41	18	51	2	0	0	0	19	0	19	1.683
T18-91	West Palm-CoTran	4037	Bus	58	2	0	0	0	0	0	11	1	12	0.034
T18-91	Ft. Lauderdale-Bct	4029	Bus	155	462	293	0	0	0	0	101	171	272	4.871
T18-91	Jacksonville-JTA	4040	Bus	133	53	43	1	0	0	0	88	17	105	0.722
T18-91	Miami-MDTA	4034	Bus	458	815	187	234	0	3	3	226	177	403	2.188
T18-91	Orlando-LYNX	4035	Bus	88	11	21	1	0	0	0	42	0	42	0.364
T18-91	St. Petersburg-PSTA	4027	Bus	105	59	41	3	0	0	0	78	0	78	0.952
T18-91	Tampa-Hartline	4041	Bus	140	235	104	13	0	0	0	177	6	183	2.421

* National Transit Database

Transit Operations Statistics (Services Supplied and Consumed) for Florida Transit Agencies [Table 19, NTD*, 1991]

Table ID	Transit Agency	ID Code	Mode	Vehicles Operate in Max. Service	Vehicles Availabl in Max. Service	Annual Sched. Vehicle Revenue Miles (000)	Annual Vehicles Miles (000)	Annual Actual Vehicle Revenue Miles (000)	Annual Vehicle Revenue Capacity Miles (000)	Annual Vehicle Hours (000)	Annual Vehicle Revenue Hours (000)	Annual Unlinked Pass. Trips (000)	Annual Pass. Miles (000)
A	B	C	D	E	F	G	H	I	J	K	L	M	N
		1000 & Over Vehicles Operated in Maximum Service											
T19-91	Daytona Beach-VOTRAN	4032	Bus	34	37	1405	1614.4	1430.4	77587.1	103.8	99.6	3001.7	10505.8
T19-91	Ft. Myers-LeeTran	4028	Bus	24	36	1333.2	1457.6	1338.4	68134	91.8	88.1	1352.4	8890.4
T19-91	Gainesville-RTS	4030	Bus	32	43	1338.4	1242.9	1236.9	76835.6	88.4	84	2569.6	7660
T19-91	Lakeland-Citrus Connect	4031	Bus	15	19	880.7	886.9	880.6	40511.4	52.5	51.8	782.5	3685.5
T19-91	Pensacola-ECTS	4038	Bus	18	27	897.5	915.2	898.6	55528	59.7	58.8	1113	5316.9
T19-91	Sarasota-SCTA	4046	Bus	19	46	1026.6	1090.3	1024.9	52819	74.7	70.3	1189.4	4763.9
T19-91	Tallahassee-TALTRAN	4036	Bus	41	46	1470.2	1558.2	1465.4	100531.9	124.5	118.6	3453.1	10379.9
T19-91	West Palm-CoTran	4037	Bus	58	74	2602.2	3147.5	2491.8	123123.1	192.5	171.1	2712.9	17190.1
T19-91	Ft. Lauderdale-Bct	4029	Bus	155	188	8806.5	9499.9	8774.9	377319.2	717.6	686.2	19108.2	79815.5
T19-91	Jacksonville-JTA	4040	Bus	133	153	5967.6	6096.5	5902.7	407184.6	434.5	421.6	9404	45494.3
T19-91	Miami-MDTA		Bus	458	547	20203.2	22778.4	20023.6	1097587	1734.3	1559.5	55131.4	223851.6
T19-91	Orlando-LYNX	4035	Bus	88	102	4836.2	5092.5	4831.5	217863.5	371.4	350.1	9641.7	37283.3
T19-91	St. Petersburg-PSTA	4027	Bus	105	132	5699.2	6190.1	5716.9	331586	424.7	400.6	10805.2	57725.8
T19-91	Tampa-Hartline	4041	Bus	140	182	5670.2	6597.3	5668.4	344636.5	443.7	393.3	8338.5	39671.1

* National Transit Database

Performance Indicators (Number of Vehicles Operated, Veh Revenue Miles, Veh Revenue Hours) for Florida Transit Agencies [Table 21, NTD*, 1991]

Table ID	Transit Agency	ID Code	Mod	Vehicles Operated in Max. Service	<Max. No. of Veh.> Operated in Avg. PM Peak Period	Operated in Avg. Base Period	Vehicles Operated in Max. Service Per Direct-tional Mile	<--Annual Actual Vehicle Revenue Miles--> Per Vehicles Operated in Max. Service	Per Oper-ator	Per Vehicle Revenue Hour (MPH)	Per Direc-tional Mile	<--Annual Vehicle--> Revenue Hours Per Vehicle Operated in Avg. Weekday Max. Service	Per Opera-tor
A	B	C	D	E	F	G	H	I	J	K	L	M	N
T21-91	Daytona Beach-VOTRAN	4032	Bus	34	0	0	0.100	42071.8	23840.7	14.4	5565.9	2930.6	1660.7
T21-91	Ft. Myers-LeeTran	4028	Bus	24	0	0	0.100	55768.1	31566.9	15.2	3635.1	3671.5	2078.2
T21-91	Gainesville-RTS	4030	Bus	32	32	29	0.100	38653	27184.5	14.7	4639.5	2625.4	1846.4
T21-91	Lakeland-Citrus Connect	4031	Bus	15	0	0	0.100	58705	35364.5	17	5793.3	3454.7	2081.1
T21-91	Pensacola-ECTS	4038	Bus	18	18	17	0.100	49924	29367.1	15.3	5955.1	3268.2	1922.5
T21-91	Sarasota-SCTA	4046	Bus	19	0	0	0.100	53943.6	28549.6	14.6	3555.1	3700	1958.2
T21-91	Tallahassee-TALTRAN	4036	Bus	41	40	40	0.200	35740.7	20933.8	12.4	7419.6	2892.3	1694
T21-91	West Palm-CoTran	4037	Bus	58	58	44	0.100	42961.6	25426.2	14.6	6376.1	2949.8	1745.8
T21-91	Ft. Lauderdale-Bct	4029	Bus	155	144	155	0.200	56612	20559.7	12.8	14146.2	4426.9	1607.7
T21-91	Jacksonville-JTA	4040	Bus	133	133	76	0.100	44381.1	22099.2	14	5075.4	3170	1578.5
T21-91	Miami-MDTA	4034	Bus	458	423	309	0.300	43719.7	19971.7	12.8	14587	3405	1555.4
T21-91	Orlando-LYNX	4035	Bus	88	82	74	0.200	54903.7	25864.7	13.8	8491.3	3978.4	1874.2
T21-91	St. Petersburg-PSTA	4027	Bus	105	101	105	0.100	54446.4	23930	14.3	3356.9	3815	1676.8
T21-91	Tampa-Hartline	4041	Bus	140	127	90	0.100	40488.3	21860.3	14.4	3838.5	2809	1516.6

* National Transit Database

Performance Indicator (Operating Expenses) Data for Florida Transit Agencies [Table 22, NTD*, 1991]

					<---------- Total Operating Expenses---------->					<Total Operating Expenses by Function>			
Table ID	Transit Agency	ID Code	Mode	Vehicle Operated in Max. Service	Per Vehicle in Max. Service	Per Vehicle Revenue Hour	Per Unlinked Pass.	Per Pass. Mile	Per Employee	Vehicle Opera-tion per Vehicle ev. Mil	Vehicle Maint. per Vehicle ev. Mil	on-Veh Maint. per Vehicle ev. Mil	General Admin. per Vehicle Rev. Mile
A	B	C	D	E	F	G	H	I	J	K	L	M	N
T22-91	Daytona Beach-VOTRAN	4032	Bus	34	109494.1	37.4	1.200	0.400	41135.9	1.300	0.800	0.000	0.500
T22-91	Ft. Myers-LeeTran	4028	Bus	24	130328.3	35.5	2.300	0.400	48796.9	1.400	0.500	0.000	0.500
T22-91	Gainesville-RTS	4030	Bus	32	68885.6	26.2	0.900	0.300	31047	1.800	0.000	0.000	0.000
T22-91	Lakeland-Citrus Connect	4031	Bus	15	91571.4	26.5	1.800	0.400	40280.7	0.900	0.300	0.000	0.400
T22-91	Pensacola-ECTS	4038	Bus	18	162718.8	49.8	2.600	0.600	52116.3	1.600	1.000	0.100	0.600
T22-91	Sarasota-SCTA	4046	Bus	19	135273.3	36.6	2.200	0.500	42765.3	1.700	0.400	0.100	0.400
T22-91	Tallahassee-TALTRAN	4036	Bus	41	116290.2	40.2	1.400	0.500	42954.1	1.900	0.600	0.000	0.800
T22-91	West Palm-CoTran	4037	Bus	58	146707	49.7	3.100	0.500	58121.6	2.200	0.600	0.100	0.500
T22-91	Ft. Lauderdale-Bct	4029	Bus	155	232194.5	52.5	1.900	0.500	52303.7	2.400	0.900	0.100	0.700
T22-91	Jacksonville-JTA	4040	Bus	133	142913.6	45.1	2.000	0.400	44913.8	1.900	0.700	0.100	0.500
T22-91	Miami-MDTA	4034	Bus	458	222389.5	65.3	1.800	0.500	61229	3.100	1.100	0.100	0.700
T22-91	Orlando-LYNX	4035	Bus	88	153492.1	38.6	1.400	0.400	47915.2	1.700	0.600	0.100	0.500
T22-91	St. Petersburg-PSTA	4027	Bus	105	136524.8	35.8	1.300	0.200	39295.8	2.000	0.500	0.000	0.000
T22-91	Tampa-Hartline	4041	Bus	140	138150.8	49.2	2.300	0.500	46661.3	2.000	0.600	0.100	0.800

* National Transit Database

Performance Indices (Passenger Miles, Passenger Trips, Vehicle Miles) for Florida Transit Agencies [Table 23, NTD*, 1991]

					<--Annual Passenger Miles-->			<--Annual Unlinked Passenger Trips-->				<---Annual Vehicle Miles--->		
Table I	Transit Agency	ID Code	Mode	Vehicles Operated in Max. Service	Per Direct-tional Mile (000)	Per Vehicle Operated in Max. Service (000)	Per Vehicle Revenue Hour	Per Direct-tional Mile (000)	Per Actual Vehicle Revenue Mile	Per Employee (000)	Per Vehicle Revenue Hour	Per Dollar Vehicle Maint-enance Expense	Per Gallon of Fuel (MPG)	Per Thousand Kilowatt Hours of Power
A	B	C	D	E	F	G	H	I	J	K	L	M	N	O
T23-91	Daytona Beach-VOTRAN	4032	Bus	34	40878.6	309	105.4	11679.6	2.100	33.2	30.1	1.440	3.65	0
T23-91	Ft. Myers-LeeTran	4028	Bus	24	24145.5	370.4	100.9	3673	1.000	21.1	15.3	2.410	4.36	0
T23-91	Gainesville-RTS	4030	Bus	32	28732.3	239.4	91.2	9638.3	2.100	36.2	30.6	2.520	4.3	0
T23-91	Lakeland-Citrus Connect	4031	Bus	15	24246.6	245.7	71.1	5147.8	0.900	22.9	15.1	4.030	4.57	0
T23-91	Pensacola-ECTS	4038	Bus	18	35234.3	295.4	90.4	7375.6	1.200	19.8	18.9	1.070	3.57	0
T23-91	Sarasota-SCTA	4046	Bus	19	16524.1	250.7	67.8	4125.5	1.200	19.8	16.9	2.890	4.21	0
T23-91	Tallahassee-TALTRAN	4036	Bus	41	52556.7	253.2	87.5	17483.9	2.400	31.1	29.1	1.740	3.49	0
T23-91	West Palm-CoTran	4037	Bus	58	43986.9	296.4	100.5	6941.9	1.100	18.5	15.9	2.010	4.08	0
T23-91	Ft. Lauderdale-Bct	4029	Bus	155	128672.4	514.9	116.3	30804.8	2.200	27.8	27.8	1.210	3.45	0
T23-91	Jacksonville-JTA	4040	Bus	133	39118.1	342.1	107.9	8086	1.600	22.2	22.3	1.450	3.27	0
T23-91	Miami-MDTA	4034	Bus	458	163073.9	488.8	143.5	40162.7	2.800	33.1	35.4	1.010	3.6	0
T23-91	Orlando-LYNX	4035	Bus	88	65524.3	423.7	106.5	16944.9	2.000	34.2	27.5	1.820	3.49	0
T23-91	St. Petersburg-PSTA	4027	Bus	105	33896.6	549.8	144.1	6344.8	1.900	29.6	27	1.740	3.65	0
T23-91	Tampa-Hartline	4041	Bus	140	26864.7	283.4	100.9	5646.7	1.500	20.1	21.2	2.050	3.53	0

* National Transit Database

Performance Indicators (Employees) for Florida Transit Agencies [Table 24, NTD*, 1991]

Table ID	Transit Agency	ID Code	Mode	Vehicles Operated in Max. Service	Trans-portation Empl. Per Veh. Operated in Weekday Max. Service	Main-tenance Empl. Per Veh. Operated in Avg. Weekday Max. Service	Adminis-tration Empl. Per Veh. Operated in Avg. Weekday Max. Service	Employee Per Vehicle Operated in Max. Service
A	B	C	D	E	F	G	H	I
T24-91	Daytona Beach-VOTRAN	4032	Bus	34	1.990	0.540	0.140	2.660
T24-91	Ft. Myers-LeeTran	4028	Bus	24	2.000	0.440	0.240	2.670
T24-91	Gainesville-RTS	4030	Bus	32	1.590	0.480	0.140	2.220
T24-91	Lakeland-Citrus Connect	4031	Bus	15	1.830	0.350	0.080	2.270
T24-91	Pensacola-ECTS	4038	Bus	18	1.940	0.920	0.260	3.120
T24-91	Sarasota-SCTA	4046	Bus	19	2.200	0.610	0.350	3.160
T24-91	Tallahassee-TALTRAN	4036	Bus	41	1.910	0.520	0.270	2.710
T24-91	West Palm-CoTran	4037	Bus	58	1.830	0.520	0.170	2.520
T24-91	Ft. Lauderdale-Bct	4029	Bus	155	3.010	0.980	0.450	4.440
T24-91	Jacksonville-JTA	4040	Bus	133	2.150	0.750	0.280	3.180
T24-91	Miami-MDTA	4034	Bus	458	2.430	0.820	0.380	3.630
T24-91	Orlando-LYNX	4035	Bus	88	2.300	0.550	0.350	3.200
T24-91	St. Petersburg-PSTA	4027	Bus	105	2.550	0.580	0.350	3.470
T24-91	Tampa-Hartline	4041	Bus	140	2.040	0.600	0.320	2.960

* National Transit Database

APPENDIX 2.

1992 NTD Data Collated for Ranking Florida Mass Transit Agencies on the Basis of Overall Relative Performance

Revenue Vehicle Maintenance Data for Florida Transit Agencies [Table 14, NTD*, 1992]

Table ID	Transit Agency	ID Code	Mode	---Number of Road calls--> Total ehicles perated Maximu ervice*	echanica Failure	Other Reasons	Total Road calls	Labor Hours for Inspection & Main-tenance	neral Maintenance----> Facilities Serving der 2 ehicl	0-3 hicl	ver 3 ehicl	Total eneral acilities	eav aciliti	Total acilities	14H/14E	14I/14E
A	B	C	D	E	F	G	H	I	J	K	L	M	N	O	P	Q
T14-92	Brevard-SCAT	4063	Bus	11	20	10	30		2			1		1	2.727	0
T14-92	Daytona Beach-VOTRAN	4032	Bus	34	184	103	287	29030	1	0	0	4	0	4	8.441	854
T14-92	Ft. Myers-LeeTran	4028	Bus	25	133	30	163	12717.8	1	0	0	2		2	6.520	509
T14-92	Gainesville-RTS	4030	Bus	32	214	631	845	7921	0.8			2		2	26.406	248
T14-92	Lakeland-Citrus Connect	4031	Bus	14	272	34	306	8907	0.8			0.9		0.9	21.857	636
T14-92	Pensacola-ECTS	4038	Bus	21	74	25	99	27810	1			0.3	0.7	1	4.714	1324
T14-92	Sarasota-SCTA	4046	Bus	20	70	402	472	8188	1			2		2	23.600	409
T14-92	Tallahassee-TALTRAN	4036	Bus	41	624	400	1024	19661	0.8			1		1	24.976	480
T14-92	West Palm-CoTran	4037	Bus	60	688	142	830	55183	1			2	0	2	13.833	920
T14-92	Ft. Lauderdale-Bct	4029	Bus	155	2079	303	2382	253629	2			1.8		1.8	15.368	1636
T14-92	Jacksonville-JTA	4040	Bus	134	1034	230	1264	119203	1			2		2	9.433	890
T14-92	Miami-MDTA	4034	Bus	505	5667	3450	9117	306840	1	2	0	1	0	1	18.053	608
T14-92	Orlando-LYNX	4035	Bus	108	134	364	498	68112	1			2	0	2	4.611	631
T14-92	St. Petersburg-PSTA	4027	Bus	104	652	1219	1871	76309		1.8		0.2		0.2	17.990	734
T14-92	Tampa-Hartline	4041	Bus	133	1676	1213	2889	118131	0.3	0	0	1		1	21.722	888

* National Transit Database

Transit System Employee Work Hour Personnel Count for Florida Transit Agencies [Table 19, NTD*, 1992]

		<----------Operating Employee Equivalents*---------->											
					---------- sportation---------->			<--Maintenance-->					
Table ID	Transit Agency	ID Code	Mode	otal Vehicles Operated in Maximum Service**	Admin & Support	Rev. Veh. Oper.	Ticketing And Fare ollection**	System Security***	Vehicle	Non-Vehicle	General Admin	Total	Total Capital Employee Equivalent
A	B	C	D	E	F	G	H	I	J	K	L	M	N
T19-92	Brevard-SCAT	4063	Bus	11	1.5	12.1	0	0	0	0	2.3	15.8	0
T19-92	Daytona Beach-VOTRAN	4032	Bus	34	7	62.3	0	0	17.9	0.8	5.5	93.5	0
T19-92	Ft. Myers-LeeTran	4028	Bus	25	4.4	45.5	0.5	0	11	0	2.2	63.6	0
T19-92	Gainesville-RTS	4030	Bus	32	3.8	47	0	0	12.1	0	4.3	67.2	0
T19-92	Lakeland-Citrus Connect	4031	Bus	14	3.8	25	0	0	4.4	0.1	1.4	34.7	0
T19-92	Pensacola-ECTS	4038	Bus	21	6	35.5	0.4	0	13.4	2.1	3.6	60.9	0
T19-92	Sarasota-SCTA	4046	Bus	20	6.1	36	0	0	10.3	0.8	6.8	60.1	0
T19-92	Tallahassee-TALTRAN	4036	Bus	41	7	69.4	12.4	0	26	5	9	128.8	0
T19-92	West Palm-CoTran	4037	Bus	60	8.8	109.6	0.4	0	26.5	2.8	9.6	157.7	0
T19-92	Ft. Lauderdale-Bct	4029	Bus	155	39.1	339.8	19	0	120.4	12.6	29.1	559.9	0
T19-92	Jacksonville-JTA	4040	Bus	134	20.2	273.8	8.7	2.1	97.8	4.4	28.7	435.5	0
T19-92	Miami-MDTA	4034	Bus	505	106.5	1018	17.1	0	319.4	43.5	169.5	1673.9	10.7
T19-92	Orlando-LYNX	4035	Bus	108	16.1	218.1	6.2	0	48.5	10.4	31	330.3	0
T19-92	St. Petersburg-PSTA	4027	Bus	104	28.6	260.6	0	0	55.7	8.7	37.9	391.5	0
T19-92	Tampa-Hartline	4041	Bus	133	22.9	209.3	0.7	0.8	63.4	15.6	42.9	355.7	3.4

* National Transit Database

Transit Accidents Data for Florida Transit Agencies [Table 20, NTD*, 1992]

				Total Vehicles Operated in Maximum Service	ber of Incidents**-->		<---Number of Fatalities--->			<----Number of Injuries---->				
Table ID	Transit Agency	ID Code	Mode		Collision	Non-Collison	Station	Patron	Non-Patron	Total	Patron	Non-Patron	Total	20FG/20E
A	B	C	E	D	F	G	H	I	J	K	L	M	N	O
T20-92	Brevard-SCAT	4063	Bus	11	1	4	2	0	0	0	0	6	6	0.455
T20-92	Daytona Beach-VOTRAN	4032	Bus	34	13	9	2	0	0	0	15	9	24	0.647
T20-92	Ft. Myers-LeeTran	4028	Bus	25	4	15	2	0	0	0	18	2	20	0.760
T20-92	Gainesville-RTS	4030	Bus	32	30	0	0	0	0	0	0	0	0	0.938
T20-92	Lakeland-Citrus Connect	4031	Bus	14	20	6	0	0	0	0	13	0	13	1.857
T20-92	Pensacola-ECTS	4038	Bus	21	4	5	1	0	0	0	8	7	15	0.429
T20-92	Sarasota-SCTA	4046	Bus	20	5	4	0	0	0	0	5	4	9	0.450
T20-92	Tallahassee-TALTRAN	4036	Bus	41	11	16	3	0	0	0	19	7	26	0.659
T20-92	West Palm-CoTran	4037	Bus	60	9	12	0	0	0	0	22	2	24	0.350
T20-92	Ft. Lauderdale-Bct	4029	Bus	155	454	241	0	0	1	1	308	0	308	4.484
T20-92	Jacksonville-JTA	4040	Bus	134	49	35	1	0	0	0	60	15	75	0.627
T20-92	Miami-MDTA	4034	Bus	505	879	192	69	0	3	3	258	311	569	2.121
T20-92	Orlando-LYNX	4035	Bus	108	181	10	5	1	0	1	53	0	53	1.769
T20-92	St. Petersburg-PSTA	4027	Bus	104	98	37	2	0	1	1	66	8	74	1.298
T20-92	Tampa-Hartline	4041	Bus	133	205	90	16	4	0	4	206	0	206	2.218

* National Transit Database

Transit Operations Statistics (Service Supplied and Consumed) for Florida Transit Agencies [Table 21, NTD*, 1992]

				<---------- Transit Service Supplied ----------							<--Transit Service--> Consumed						<--Maintenance-->			
Table ID	Transit Agency	ID Code	Mod	ehicle perated Maximu	Vehicles vailable f Maximum	Annual Scheduled Vehicle Revenue Miles in	Annual ehicle Miles i	Annual Actual Vehicle Revenu Miles in	Annual Vehicle ours in	Annual Vehicle Revenue Hours in	Annual Unlinked asseng Trips in•	Annual asseng Miles in	21K/19	21K/19	21K/19P		Vehicle	Non-Vehicle	General Admin	Total
A	B	C	D	E	F	G	H	I	J	K	L	M	N	O	P		Q	R	S	T
T21-9	Brevard-SCAT	4063	Bus	11	29	400.2	456.4	400.2	15.2	14.3	123.2	1547.5	#DIV/0!	6217	905		0	0	2.3	15.8
T21-9	Daytona Beach	4032	Bus	34	37	1460.1	1552	1463.7	110.1	107.9	3025.3	10589	5770	19618	1154		17.9	0.8	5.5	93.5
T21-9	Ft. Myers-LeeT	4028	Bus	25	36	1412.8	1503	1419	94.7	90.9	1451.7	9182.6	8264	41318	1429		11	0	2.2	63.6
T21-9	Gainesville-RT	4030	Bus	32	43	1324.6	1239	1223.5	87.4	82.7	2569.6	766	6835	19233	1231		12.1	0	4.3	67.2
T21-9	Lakeland-Citru	4031	Bus	14	19	884.3	896.6	884	54.5	51.9	860.8	3977.8	11533	37071	1496		4.4	0.1	1.4	34.7
T21-9	Pensacola-EC	4038	Bus	21	27	958.1	968.5	959.3	66.8	65.7	1118.6	5342.4	4239	18250	1079		13.4	2.1	3.6	60.9
T21-9	Sarasota-SCT	4046	Bus	20	37	1046.8	1110	1044.5	75.3	71.1	1258.6	5012.7	6405	10456	1183		10.3	0.8	6.8	60.1
T21-9	Tallahassee-T	4036	Bus	41	48	1516.4	1603	1509	127.6	121.5	3626.9	10881	3919	13500	943		26	5	9	128.8
T21-9	West Palm-Co	4037	Bus	60	73	2689.2	3171	2645.6	194.1	178.1	2712.9	17190	6078	18552	1129		26.5	2.8	9.6	157.7
T21-9	Ft. Lauderdale-	4029	Bus	155	189	8801.5	9424	8728.1	656.1	629.5	19972	96256	4733	21632	1124		120.4	12.6	29.1	559.9
T21-9	Jacksonville-JT	4040	Bus	134	160	6353.7	6445	6321.2	456.7	444	9585.1	46697	4344	15470	1020		97.8	4.4	28.7	435.5
T21-9	Miami-MDTA	4034	Bus	505	574	21515	23363	20435	1856	1612.7	55125	233416	4444	9514	963		319.4	43.5	169.5	1673.9
T21-9	Orlando-LYNX	4035	Bus	108	122	5696	6059	5693.8	444.8	419.2	9726.2	47866	7117	13523	1269		48.5	10.4	31	330.3
T21-9	St. Petersburg-	4027	Bus	104	149	5756.4	6257	5775.3	439	416.3	9413.7	50856	6464	10984	1063		55.7	8.7	37.9	391.5
T21-9	Tampa-Hartline	4041	Bus	133	160	5634.4	6491	5630.7	440.3	380.8	8323.7	36942	4820	8876	1071		63.4	15.6	42.9	355.7

* National Transit Database

Transit Performance Indicators (Based on Veh Operated, Veh Revenue Miles and Hours) for Florida Transit Agencies [Table 23, NTD*, 1992]

Table ID	Transit Agency	ID Code	Mode	Total Vehicles perated i Maximum Service*	<---Max. No. of Vehicl perated i Avg. PM Peak Period	perated i Avg. Base Period	Vehicles Operated in Max. Service Per Directional	<---Annual Actual Vehicle Revenue Miles---- Per Vehicle perated i Maximum	Per Operator**	Per Vehicle Revenue Hour	Per Directional Mile	<----Annual Vehicle----> evenue Hours Per Vehicle perated i	Per Operator**
A	B	C	D	E	F	G	H	I	J	K	L	M	N
T23-92	Brevard-SCAT	4063	Bus	11	0	0	0	36382.7	33168.8	28	885.4	1300	1185.2
T23-92	Daytona Beach-VOTRA	4032	Bus	34	0	0	0.1	43049.9	23482.9	13.6	5695.3	3172.3	1730.4
T23-92	Ft. Myers-LeeTran	4028	Bus	25	22	22	0.1	56761.6	31180.5	15.6	3854	3635.7	1997.2
T23-92	Gainesville-RTS	4030	Bus	32	0	0	0.1	38234	26016.5	14.8	4584.1	2583.5	1758
T23-92	Lakeland-Citrus Connect	4031	Bus	14	14	14	0.1	63142.1	35341.2	17	5815.7	3705.8	2074.2
T23-92	Pensacola-ECTS	4038	Bus	21	21	18	0.1	45681.7	26994.4	14.6	4035.8	3129.2	1849.1
T23-92	Sarasota-SCTA	4046	Bus	20	0	0	0.1	52224.9	29043.3	14.7	3555.1	3553.2	1976
T23-92	Tallahassee-TALTRAN	4036	Bus	41	40	40	0.2	36805.1	21743.7	12.4	7730.6	2962.5	1750.2
T23-92	West Palm-CoTran	4037	Bus	60	58	44	0.1	44092.5	24138	14.9	6083.1	2967.8	1624.7
T23-92	Ft. Lauderdale-Bct	4029	Bus	155	145	155	0.2	56310.6	25689.4	13.9	14070.8	4061.6	1852.9
T23-92	Jacksonville-JTA	4040	Bus	134	134	79	0.1	47172.9	23087.2	14.2	5435.2	3313.2	1621.5
T23-92	Miami-MDTA	4034	Bus	505	474	320	0.3	40466	20074.9	12.7	14158.8	3193.5	1584.2
T23-92	Orlando-LYNX	4035	Bus	108	99	95	0.2	52720.8	26106.2	13.6	9919.6	3881.8	1922.2
T23-92	St. Petersburg-PSTA	4027	Bus	104	104	103	0.1	55531.4	22161.2	13.9	3391.2	4002.9	1597.5
T23-92	Tampa-Hartline	4041	Bus	133	132	83	0.1	42336	26900	14.8	3833.8	2863.1	1819.2

* National Transit Database

Performance indicators (Operating Expenses) Data for Florida Transit Agencies [Table 24, NTD*, 1992]

				<----------ng Expenses---------->					<---Total Operating Expenses by Function-->				
Table ID	Transit Agency	ID Code	Mod	Total Vehicles perated i Maximum Service*	Per Veh. Operated in Max. Service	Per Vehicle Revenue Hour	Per Unlinked Passenger	Per Passenger Mile	Per mployee*	Vehicle Operation Per Vehicle Rev. Mile	Vehicle Maint. Per Vehicle Rev. Mile	Non-Veh. Maint. Per Vehicle Rev. Mile	General Admin. Per Vehicle Rev. Mile
A	B	C	D	E	F	G	H	I	J	K	L	M	N
T24-92	Brevard-SCAT	4063	Bus	11	83276.5	64.1	7.400	0.600	57903.3	1.500	0.600		0.200
T24-92	Daytona Beach-VOTRAN	4032	Bus	34	111258.3	35.1	1.300	0.400	40477.7	1.300	0.700	0.000	0.500
T24-92	Ft. Myers-LeeTran	4028	Bus	25	124277.9	34.2	2.100	0.300	48872.4	1.300	0.400	0.100	0.400
T24-92	Gainesville-RTS	4030	Bus	32	96311.4	37.3	1.200	4.000	45876	1.800	0.400		0.300
T24-92	Lakeland-Citrus Connect	4031	Bus	14	104611.1	28.2	1.700	0.400	42241.3	0.900	0.400	0.000	0.300
T24-92	Pensacola-ECTS	4038	Bus	21	157087.3	50.2	2.900	0.600	54146.7	1.700	0.900	0.100	0.700
T24-92	Sarasota-SCTA	4046	Bus	20	137166.7	38.6	2.200	0.500	45680.5	1.800	0.400	0.000	0.400
T24-92	Tallahassee-TALTRAN	4036	Bus	41	125822	42.5	1.400	0.500	40041.3	1.800	0.800	0.100	0.800
T24-92	West Palm-CoTran	4037	Bus	60	141467.8	47.7	3.100	0.500	53837.9	2.000	0.600	0.100	0.500
T24-92	Ft. Lauderdale-Bct	4029	Bus	155	233243.5	57.4	1.800	0.400	64572.9	2.800	0.900	0.100	0.300
T24-92	Jacksonville-JTA	4040	Bus	134	144146	43.5	2.000	0.400	44350.6	1.800	0.700	0.100	0.500
T24-92	Miami-MDTA	4034	Bus	505	207051.3	64.8	1.900	0.400	62067.9	3.200	1.100	0.200	0.600
T24-92	Orlando-LYNX	4035	Bus	108	153946	39.7	1.700	0.300	50333.5	1.600	0.500	0.100	0.700
T24-92	St. Petersburg-PSTA	4027	Bus	104	194705.6	48.6	2.200	0.400	51723.6	2.100	0.600	0.100	0.700
T24-92	Tampa-Hartline	4041	Bus	133	157625.7	55.1	2.500	0.600	58379.3	2.100	0.600	0.100	0.900

* National Transit Database

Performance Indicators (Passenger Trips, Passenger Miles and Vehicle miles) Data [Table 25, NTD*, 1992]

Table ID	Transit Agency	ID Code	Mod	Total Vehicles perated i Maximum Service*	<------Annual Passenger Miles---- Per Directional Mile in Thousand	Per Veh Operated in Max. Service in Thousand	Per Vehicle Revenue Hour	<-----Annual Unlinked Passenger Trips-----> Per Directional Mile in Thousand	Per Actual Vehicle Revenue Mile	Per mployee* in Thousand	Per Vehicle Revenue Hour	Per <---Annual Vehicle Miles---> Dollar Vehicle Maint-enance Expense	Per Gallon of Fuel (MPG)	Per Thousand Kilowatt Hours of Power
A	B	C	G	H	I	J	K	L	M	N	O	P	Q	R
T25-92	Brevard-SCAT	4063	Bus	11	3.4	140.7	108.200	0.300	0.300	7.800	8.600	1.890	6.050	
T25-92	Daytona Beach-VOT	4032	Bus	34	41.2	311.4	98.200	11.800	2.100	32.400	28.000	1.470	3.550	
T25-92	Ft. Myers-LeeTran	4028	Bus	25	24.9	367.3	101.000	3.900	1.000	22.800	16.000	2.690	4.660	
T25-92	Gainesville-RTS	4030	Bus	32	2.9	23.9	9.300	9.600	2.100	38.200	31.100		4.000	
T25-92	Lakeland-Citrus Conn	4031	Bus	14	26.2	284.1	76.700	5.700	1.000	24.800	16.600	2.790	4.130	
T25-92	Pensacola-ECTS	4038	Bus	21	22.5	254.4	81.300	4.700	1.200	18.400	17.000	1.150	3.720	
T25-92	Sarasota-SCTA	4046	Bus	20	17.1	250.6	70.500	4.300	1.200	21.000	17.700	2.860	4.020	
T25-92	Tallahassee-TALTRA	4036	Bus	41	55.7	265.4	89.600	18.600	2.400	28.200	29.900	1.320	3.520	
T25-92	West Palm-CoTran	4037	Bus	60	39.5	286.5	96.500	6.200	1.000	17.200	15.200	1.890	4.060	
T25-92	Ft. Lauderdale-Bct	4029	Bus	155	155.2	621	152.900	32.200	2.300	35.700	31.700	1.150	3.050	
T25-92	Jacksonville-JTA	4040	Bus	134	40.2	348.5	105.200	8.200	1.500	22.000	21.600	1.530	3.280	
T25-92	Miami-MDTA	4034	Bus	505	161.7	462.2	144.700	38.200	2.700	32.700	34.200	1.070	3.590	
T25-92	Orlando-LYNX	4035	Bus	108	83.4	443.2	114.200	16.900	1.700	29.400	23.200	2.350	3.520	
T25-92	St. Petersburg-PSTA	4027	Bus	104	29.9	489	122.200	5.500	1.600	24.000	22.600	1.680	3.700	
T25-92	Tampa-Hartline	4041	Bus	133	25.2	277.8	97.000	5.700	1.500	23.200	21.900	1.970	3.440	

* National Transit Database

Performance Indicators (Employees) for Florida transit Agencies [Table 26, NTD*, 1992]

Table ID	Transit Agency	ID Code	Mode	Total Vehicle Operated in Maximum Service**	Transportatio mployees P hicle Operat in Maximum Service	Maintenance mployees P hicle Operat in Maximum Service	dministration mployees P hicle Operat in Maximum Service	mployees Per hicle Operated in Maximum Service
A	B	C	D	E	F	G	H	I
T26-92	Brevard-SCAT	4063	Bus	11	1.230		0.210	1.440
T26-92	Daytona Beach-VOTRAN	4032	Bus	34	2.040	0.550	0.160	2.750
T26-92	Ft. Myers-LeeTran	4028	Bus	25	2.020	0.440	0.090	2.540
T26-92	Gainesville-RTS	4030	Bus	32	1.590	0.380	0.130	2.100
T26-92	Lakeland-Citrus Connect	4031	Bus	14	2.060	0.320	0.100	2.480
T26-92	Pensacola-ECTS	4038	Bus	21	1.990	0.740	0.170	2.900
T26-92	Sarasota-SCTA	4046	Bus	20	2.100	0.560	0.340	3.000
T26-92	Tallahassee-TALTRAN	4036	Bus	41	2.170	0.760	0.220	3.140
T26-92	West Palm-CoTran	4037	Bus	60	1.980	0.490	0.160	2.630
T26-92	Ft. Lauderdale-Bct	4029	Bus	155	2.570	0.860	0.190	3.610
T26-92	Jacksonville-JTA	4040	Bus	134	2.270	0.760	0.210	3.250
T26-92	Miami-MDTA	4034	Bus	505	2.260	0.720	0.340	3.340
T26-92	Orlando-LYNX	4035	Bus	108	2.230	0.550	0.290	3.060
T26-92	St. Petersburg-PSTA	4027	Bus	104	2.780	0.620	0.360	3.760
T26-92	Tampa-Hartline	4041	Bus	133	1.760	0.590	0.320	2.700

* National Transit Database

APPENDIX 2.

1993 NTD Data Collated for Ranking Florida Mass Transit Agencies on the Basis of Overall Relative Performance

Revenue Vehicle Maintenance Data for Florida Transit Agencies [Table 14, NTD*, 1993]

Table ID	Transit Agency	ID Code	Mode	Total Vehicles aximu ervice*	<---Number of Roadcalls eason	Reaso	terruptio	Labor Hours for Inspection tenance	<----Number of General Maintenance----> Vehicle	Facilities Serving Vehicles	Vehicles	Total acilities	Heavy Facilities	Total Facilities	14H/14E	14I/14E
A	B	C	D	E	F	G	H	I	J	K	L	M	N	O	P	Q
T14-93	Brevard-SCAT	4063	Bus	11	12	3	15	0.0	1.000	0.000	0.000	1.000	0.000	1.000	1.364	0.000
T14-93	Daytona Beach-V	4032	Bus	34	186	88	274	30,419.0	1.000	0.000	0.000	1.000	0.000	1.000	8.059	894.676
T14-93	Ft. Myers-LeeTra	4028	Bus	26	78	19	97	12,808.0	1.000	0.000	0.000	1.000	0.000	1.000	3.731	492.615
T14-93	Gainesville-RTS	4030	Bus	30	497	262	759	16,264.0	0.000	0.000	0.000	0.000	0.750	0.800	25.300	542.133
T14-93	Lakeland-Citrus C	4031	Bus	14	150	39	189	989,276.0	0.800	0.000	0.000	0.800	0.000	0.800	13.500	70662.571
T14-93	Pensacola-ECTS	4038	Bus	25	50	10	60	22,410.0	1.000	0.000	0.000	1.000	0.000	1.000	2.400	896.400
T14-93	Sarasota-SCTA	4046	Bus	20	68	282	350	7,848.0	1.000	0.000	0.000	1.000	0.000	1.000	17.500	392.400
T14-93	Tallahassee-TALT	4036	Bus	41	394	230	624	23,385.0	0.800	0.000	0.000	0.800	0.000	0.800	15.220	570.366
T14-93	West Palm-CoTra	4037	Bus	57	374	365	739	56,610.0	1.000	0.000	0.000	1.000	0.000	1.000	12.965	993.158
T14-93	Ft. Lauderdale-Bc	4029	Bus	166	1,570	121	1,691	143,107.0	2.000	0.000	0.000	2.000	0.000	2.000	10.187	862.090
T14-93	Jacksonville-JTA	4040	Bus	135	800	188	988	119,248.0	1.000	0.000	0.000	1.000	0.000	1.000	7.319	883.319
T14-93	Miami-MDTA	4034	Bus	501	8,551	5,368	13,919	342,716.0	1.000	2.000	0.000	3.000	0.000	3.000	27.782	684.064
T14-93	Orlando-LYNX	4035	Bus	113	360	635	995	70,400.0	1.000	0.000	0.000	1.000	0.000	1.000	8.805	623.009
T14-93	St. Petersburg-PS	4027	Bus	101	1,777	801	2,578	110,251.0	1.800	0.000	0.000	1.800	0.000	1.800	25.525	1091.594
T14-93	Tampa-Hartline	4041	Bus	133	1,410	386	1,796	32,870.0	0.000	0.000	0.000	0.000	1.000	1.000	13.504	247.143

* National Transit Database

Employee Work Hours and Personnel Count for Florida Transit Agencies [Table 19, NTD*, 1993]

					<----------	-------Employee Work Hours**----------			---------->	<Actual Person Count - Full Time Employees***>				
				Total Vehicles										
				Maximu	Vehicle	Vehicle	Vehicle	General	Capital	Vehicle	Vehicle	Vehicle	General	Capital
		ID		Service*	Oper	Maint	Maint	Admin		Oper	Maint	Maint	Admin	
Table ID	Transit Agency	Code	Mode											
A	B	C	D	E	F	G	H	I	J	K	L	M	N	O
T19-93	Brevard-SCAT	4063	Bus	11	26,869	0	0	5,600	0	12.0	0.0	0.0	2.6	0.0
T19-93	Daytona Beach-V	4032	Bus	34	145,813	36,835	3,518	13,809	0	70.0	16.0	1.0	5.0	0.0
T19-93	Ft. Myers-LeeTra	4028	Bus	26	108,154	23,880	0	8,270	0	45.0	11.0	0.0	5.0	0.0
T19-93	Gainesville-RTS	4030	Bus	30	111,000	23,000	0	12,000	0	54.0	11.0	0.0	6.0	0.0
T19-93	Lakeland-Citrus C	4031	Bus	14	68,989	10,816	0	3,329	0	27.4	4.0	0.0	1.6	0.0
T19-93	Pensacola-ECTS	4038	Bus	25	91,621	22,410	7,876	9,280	0	47.0	12.0	5.0	4.0	0.0
T19-93	Sarasota-SCTA	4046	Bus	20	92,803	21,764	1,682	13,840	0	50.3	11.0	0.8	6.0	0.0
T19-93	Tallahassee-TALT	4036	Bus	41	190,564	54,600	8,320	19,760	0	72.0	25.0	4.0	9.0	0.0
T19-93	West Palm-CoTra	4037	Bus	57	251,747	56,610	5,246	20,367	0	129.0	29.0	3.0	12.0	0.0
T19-93	Ft. Lauderdale-Bc	4029	Bus	166	915,200	270,400	43,680	122,720	0	440.0	130.0	21.0	59.0	0.0
T19-93	Jacksonville-JTA	4040	Bus	135	649,553	204,369	8,743	62,280	0	298.0	96.0	4.0	32.0	0.0
T19-93	Miami-MDTA	4034	Bus	501	2,677,936	725,697	91,809	335,725	15,245	1,220.0	330.0	42.0	154.0	7.0
T19-93	Orlando-LYNX	4035	Bus	113	572,811	113,004	18,725	79,840	0	311.0	58.5	9.5	49.0	0.0
T19-93	St. Petersburg-PS	4027	Bus	101	580,270	110,251	23,181	92,572	0	286.0	59.0	11.0	48.0	0.0
T19-93	Tampa-Hartline	4041	Bus	133	574,217	143,842	38,058	108,085	0	264.0	69.0	18.0	57.0	0.0

* National Transit Database

Transit Accidents Data for Florida Transit Agencies [Table 20, NTD*, 1993]

				Total Vehicles Operated in Maximum	<--Number of Incidents**-->			<---Number of Fatalities--->			<----Number of Injuries---->			
Table ID	Transit Agency	ID Code	Mode	Service*	Collision	Non-Collison	Station	Patron	Non-Patron	Total	Patro	Non-Patron	Total	20FG/20E
A	B	C	D	E	F	G	H	I	J	K	L	M	N	O
T20-93	Brevard-SCAT	4063	Bus	11	1	2	0	0	0	0	0	2	2	0.273
T20-93	Daytona Beach-V	4032	Bus	34	1	3	0	0	0	0	0	3	3	0.118
T20-93	Ft. Myers-LeeTra	4028	Bus	26	5	16	3	0	0	0	24	3	27	0.808
T20-93	Gainesville-RTS	4030	Bus	30	3	14	0	0	0	0	15	0	15	0.567
T20-93	Lakeland-Citrus C	4031	Bus	14	7	0	0	0	0	0	12	0	12	0.500
T20-93	Pensacola-ECTS	4038	Bus	25	3	6	5	0	0	0	15	0	15	0.360
T20-93	Sarasota-SCTA	4046	Bus	20	5	10	0	0	0	0	10	1	11	0.750
T20-93	Tallahassee-TALT	4036	Bus	41	41	5	0	0	0	0	16	0	16	1.122
T20-93	West Palm-CoTra	4037	Bus	57	7	12	0	0	0	0	21	4	25	0.333
T20-93	Ft. Lauderdale-Bc	4029	Bus	166	361	328	0	0	1	1	358	20	378	4.151
T20-93	Jacksonville-JTA	4040	Bus	135	42	30	1	0	0	0	65	29	94	0.533
T20-93	Miami-MDTA	4034	Bus	501	1,086	211	75	0	4	4	330	364	694	2.589
T20-93	Orlando-LYNX	4035	Bus	113	171	30	0	0	0	0	65	0	65	1.779
T20-93	St. Petersburg-PS	4027	Bus	101	139	0	0	1	0	1	23	0	23	1.376
T20-93	Tampa-Hartline	4041	Bus	133	159	74	7	1	0	1	137	13	150	1.752

* National Transit Database

Transit Operations Statistics (Service Supplied and Service Consumed) for Florida Transit Agencies [Table 21, NTD*, 1993]

				<----------Transit Service Supplied---------->							Transit Service Consumed	
Table ID	Transit Agency	ID Code	Mode	Vehicles Maximum Service*	Vehicles Maximum Service	Annual Scheduled Vehicle Miles	Annual Miles (in Thousan	Annual Actual Vehicle Miles Thousan	Annual Hours Thousan	Annual Vehicle Hours Thousan	Annual Unlinked Trips Thousan	Annual Miles (in Thousands)
A	B	C	D	E	F	G	H	I	J	K	L	M
T21-93	Brevard-SCAT	4063	Bus	11	28	418.4	478.2	418.4	17.5	15.3	132.0	1,483.6
T21-93	Daytona Beach-V	4032	Bus	34	37	1,489.0	1,575.1	1,491.1	114.0	109.2	3,247.4	10,463.9
T21-93	Ft. Myers-LeeTra	4028	Bus	26	36	1,563.9	1,668.8	1,566.6	93.8	88.1	1,748.9	9,497.6
T21-93	Gainesville-RTS	4030	Bus	30	43	1,409.6	1,424.9	1,409.6	74.3	69.9	2,370.2	0.0
T21-93	Lakeland-Citrus C	4031	Bus	14	21	883.7	896.0	883.4	52.5	51.9	981.9	4,351.0
T21-93	Pensacola-ECTS	4038	Bus	25	30	1,080.0	1,105.3	1,078.3	76.2	75.3	1,260.9	6,139.5
T21-93	Sarasota-SCTA	4046	Bus	20	35	1,059.9	1,119.7	1,056.0	76.9	73.0	1,317.9	5,120.0
T21-93	Tallahassee-TALT	4036	Bus	41	48	1,496.0	1,587.4	1,485.8	129.4	122.3	3,944.2	11,837.3
T21-93	West Palm-CoTra	4037	Bus	57	76	2,838.4	3,290.5	2,817.0	205.4	188.7	2,714.6	17,380.4
T21-93	Ft. Lauderdale-Bc	4029	Bus	166	189	8,805.9	9,511.0	8,759.4	661.1	633.9	21,318.7	95,630.3
T21-93	Jacksonville-JTA	4040	Bus	135	183	6,549.9	6,747.1	6,516.5	465.5	452.8	9,621.9	46,935.9
T21-93	Miami-MDTA	4034	Bus	501	612	22,567.4	25,038.4	22,037.5	1,946.1	1,785.3	63,806.5	246,260.5
T21-93	Orlando-LYNX	4035	Bus	113	130	5,740.0	6,878.1	5,766.8	498.0	472.9	10,749.7	52,747.5
T21-93	St. Petersburg-PS	4027	Bus	101	152	6,430.8	7,008.3	6,479.6	475.6	444.5	8,802.8	42,918.3
T21-93	Tampa-Hartline	4041	Bus	133	160	5,267.8	5,967.1	5,263.7	432.2	354.5	9,427.1	40,959.6

* National Transit Database

Performance Indicators Data (Based on Veh Operated, Veh Revenue Miles and Hours) for Florida Transit Agencies [Table 23, NTD*, 1993]

Table ID	Transit Agency	ID Code	Mode	Total Vehicles Maximum Service**	<---Max. No. of Vehicl Operated i Peak Period	perated i Period	Vehicles Operated in Max. Per Directional	<---Annual Actual Vehicle Revenue Miles---- Per perated i Maximum	Full-Time	Per Revenue Hour	Per Route Mile	<----Annual Vehicle----> Revenue Hours Vehicle perated i	Full-Time
A	B	C	D	E	F	G	H	I	J	K	L	M	N
T23-93	Brevard-SCAT	4063	Bus	11	0	0	0.023	38,033.6	12.9	27.3	877.1	1,391.3	0.471
T23-93	Daytona Beach-VOTRAN	4032	Bus	34	0	0	0.123	43,856.7	7.5	13.7	5,414.4	3,210.7	0.546
T23-93	Ft. Myers-LeeTran	4028	Bus	26	21	21	0.069	60,252.8	11.2	17.8	4,152.1	3,389.8	0.628
T23-93	Gainesville-RTS	4030	Bus	30	28	21	0.112	46,986.1	9.7	20.2	5,281.3	2,329.0	0.479
T23-93	Lakeland-Citrus Connect	4031	Bus	14	0	0	0.092	63,100.7	10.6	17.0	5,811.9	3,708.1	0.624
T23-93	Pensacola-ECTS	4038	Bus	25	0	0	0.102	43,133.9	8.2	14.3	4,406.8	3,012.6	0.574
T23-93	Sarasota-SCTA	4046	Bus	20	0	0	0.069	52,800.9	8.1	14.5	3,626.4	3,649.9	0.561
T23-93	Tallahassee-TALTRAN	4036	Bus	41	41	39	0.210	36,239.6	5.4	12.1	7,611.8	2,983.6	0.448
T23-93	West Palm-CoTran	4037	Bus	57	57	43	0.125	49,421.4	8.4	14.9	6,162.8	3,310.6	0.565
T23-93	Ft. Lauderdale-Bct	4029	Bus	166	148	166	0.265	52,767.8	6.5	13.8	14,008.4	3,818.8	0.469
T23-93	Jacksonville-JTA	4040	Bus	135	134	84	0.116	48,270.0	7.0	14.4	5,603.1	3,353.7	0.489
T23-93	Miami-MDTA	4034	Bus	501	471	332	0.341	43,986.9	5.7	12.3	14,990.4	3,563.5	0.464
T23-93	Orlando-LYNX	4035	Bus	113	110	103	0.186	51,033.9	7.4	12.2	9,469.3	4,184.9	0.603
T23-93	St. Petersburg-PSTA	4027	Bus	101	97	101	0.059	64,154.6	8.0	14.6	3,804.8	4,400.8	0.551
T23-93	Tampa-Hartline	4041	Bus	133	132	86	0.091	39,576.5	6.1	14.8	3,611.4	2,665.6	0.410

* National Transit Database

Performance Indicators Data (Operating Expenses) for Florida Transit Agencies [Table 24, NTD*, 1993]

					<----------	Total Operating Expenses---------->				<---Total Operating Expenses by Function-->			
Table ID	Transit Agency	ID Code	Mode	Operated in Total Vehicles Maximum Service*	Operated Per Veh. in Max. Service	Revenue Per Vehicle Hour (VRH)	Passenger Per Unlinked Trip (UPT)	Per Passenger Mile	Full-Time Employee	Per Vehicle Operation Vehicle Rev. Mile	Per Vehicle Maint. Vehicle Rev. Mile	Per Non-Veh. Maint. Vehicle Rev. Mile	Per General Maint. Vehicle Rev. Mile
A	B	C	D	E	F	G	H	I	J	K	L	M	N
T24-93	Brevard-SCAT	4063	Bus	11	85,854.4	61.7	7.155	0.637	29.086	1.133	0.659	0.013	0.453
T24-93	Daytona Beach-VOTRAN	4032	Bus	34	116,350.6	36.2	1.218	0.378	19.782	1.245	0.752	0.049	0.607
T24-93	Ft. Myers-LeeTran	4028	Bus	26	120,113.0	35.4	1.786	0.329	22.258	1.182	0.466	0.032	0.314
T24-93	Gainesville-RTS	4030	Bus	30	107,818.2	46.3	1.365	0.000	22.154	1.660	0.348	0.000	0.287
T24-93	Lakeland-Citrus Connect	4031	Bus	14	106,167.7	28.6	1.514	0.342	17.879	1.153	0.256	0.000	0.274
T24-93	Pensacola-ECTS	4038	Bus	25	131,752.0	43.7	2.612	0.536	25.108	1.767	0.573	0.166	0.549
T24-93	Sarasota-SCTA	4046	Bus	20	144,834.1	39.7	2.198	0.566	22.267	1.883	0.389	0.028	0.443
T24-93	Tallahassee-TALTRAN	4036	Bus	41	139,761.0	46.8	1.453	0.484	20.971	1.996	0.787	0.093	0.980
T24-93	West Palm-CoTran	4037	Bus	57	159,965.4	48.3	3.359	0.525	27.302	2.051	0.561	0.067	0.558
T24-93	Ft. Lauderdale-Bct	4029	Bus	166	222,247.4	58.2	1.731	0.386	27.288	2.820	0.928	0.094	0.370
T24-93	Jacksonville-JTA	4040	Bus	135	148,817.0	44.4	2.088	0.428	21.721	1.895	0.637	0.066	0.485
T24-93	Miami-MDTA	4034	Bus	501	226,290.6	63.5	1.777	0.460	29.475	3.232	1.064	0.161	0.687
T24-93	Orlando-LYNX	4035	Bus	113	179,857.4	43.0	1.891	0.385	25.911	1.960	0.612	0.089	0.863
T24-93	St. Petersburg-PSTA	4027	Bus	101	225,548.1	51.3	2.588	0.531	28.254	2.154	0.640	0.107	0.614
T24-93	Tampa-Hartline	4041	Bus	133	155,013.3	58.2	2.187	0.503	23.856	2.178	0.636	0.139	0.964

* National Transit Database

Performance Indicators Data (Passenger Trips and Miles, Vehicle Miles) for Florida Transit Agencies [Table 25, NTD*, 1993]

					<------Annual Passenger Miles----			<-----Annual Unlinked Passenger Trips----->				<---Annual Vehicle Miles--->		
Table ID	Transit Agency	ID Code	Mode	Total Vehicles perated i Maximum Service*	Per Directional Mile in Thousand (DRM)	Per Veh Operated in Max. Service in Thousand	Per Vehicle Revenue Hour (VRH)	Per Directional Mile in Thousand (DRM)	Per Acutal Vehicle Revenue Mile (VRM)	Per Full-Time Employee in Thousand	Per Vehicle Revenue Hour (VRH)	Per Dollar Vehicle Maint. Expense	Per Gallon of Fuel (MPG)	Per Thousand Kilowatt Hours of Power
A	B	C	D	E	F	G	H	I	J	K	L	M	N	O
T25-93	Brevard-SCAT	4063	Bus	11	3.1	134.9	96.9	0.3	0.3	4.1	8.6	1.73	5.77	
T25-93	Daytona Beach-VOTRAN	4032	Bus	34	38.0	307.8	95.9	11.8	2.2	16.2	29.7	1.40	3.44	
T25-93	Ft. Myers-LeeTran	4028	Bus	26	25.2	365.3	107.8	4.6	1.1	12.5	19.8	2.28	4.97	
T25-93	Gainesville-RTS	4030	Bus	30		0.0	0.0	8.9	1.7	16.2	33.9	2.91	4.71	
T25-93	Lakeland-Citrus Connect	4031	Bus	14	28.6	310.8	83.8	6.5	1.1	11.8	18.9	3.97	3.30	
T25-93	Pensacola-ECTS	4038	Bus	25	25.1	245.6	81.5	5.2	1.2	9.6	16.7	1.79	4.54	
T25-93	Sarasota-SCTA	4046	Bus	20	17.6	256.0	70.1	4.5	1.2	10.1	18.1	2.72	4.03	
T25-93	Tallahassee-TALTRAN	4036	Bus	41	60.6	288.7	96.8	20.2	2.7	14.4	32.2	1.36	3.43	
T25-93	West Palm-CoTran	4037	Bus	57	38.0	304.9	92.1	5.9	1.0	8.1	14.4	2.08	4.02	
T25-93	Ft. Lauderdale-Bct	4029	Bus	166	152.9	576.1	150.9	34.1	2.4	15.8	33.6	1.17	2.99	
T25-93	Jacksonville-JTA	4040	Bus	135	40.4	347.7	103.7	8.3	1.5	10.4	21.3	1.63	3.27	
T25-93	Miami-MDTA	4034	Bus	501	167.5	491.5	137.9	43.4	2.9	16.6	35.7	1.07	3.42	
T25-93	Orlando-LYNX	4035	Bus	113	86.6	466.8	111.5	17.7	1.9	13.7	22.7	1.95	3.60	
T25-93	St. Petersburg-PSTA	4027	Bus	101	25.2	424.9	96.6	5.2	1.4	10.9	19.8	1.69	3.71	
T25-93	Tampa-Hartline	4041	Bus	133	28.1	308.0	115.5	6.5	1.8	10.9	26.6	1.78	3.07	

* National Transit Database

Performance Indicators Data (Service) for Florifda Transit Agencies [Table 26, NTD, 1993]

Table ID	Transit Agency	ID Code	Mode	Total Vehicle Operated in Maximum Service**	Vehicle Employee Pe Veh Operated in Maximum Service	Vehicle Maint Employee Pe Veh Operated in Maximum Service	n-Vehicle Mai mployees Pe Veh Operated in Maximum Service	Administratio Employees P Veh Operated in Maximum Service	Capital Employees P Veh Operated in Maximum Service	Total System Employees Per Vehicles Operated in Maximum Service
A	B	C	D	E	F	G	H	I	J	K
T26-93	Brevard-SCAT	4063	Bus	11	1.091	0.000	0.000	0.236	0.000	1.327
T26-93	Daytona Beach-VOTRAN	4032	Bus	34	2.059	0.471	0.029	0.147	0.000	2.706
T26-93	Ft. Myers-LeeTran	4028	Bus	26	1.731	0.423	0.000	0.192	0.000	2.346
T26-93	Gainesville-RTS	4030	Bus	30	1.800	0.367	0.000	0.200	0.000	2.367
T26-93	Lakeland-Citrus Connect	4031	Bus	14	1.957	0.286	0.000	0.114	0.000	2.357
T26-93	Pensacola-ECTS	4038	Bus	25	1.880	0.480	0.200	0.160	0.000	2.720
T26-93	Sarasota-SCTA	4046	Bus	20	2.513	0.550	0.038	0.300	0.000	3.400
T26-93	Tallahassee-TALTRAN	4036	Bus	41	1.756	0.610	0.098	0.220	0.000	2.683
T26-93	West Palm-CoTran	4037	Bus	57	2.263	0.509	0.053	0.211	0.000	3.035
T26-93	Ft. Lauderdale-Bct	4029	Bus	166	2.651	0.783	0.127	0.355	0.000	3.916
T26-93	Jacksonville-JTA	4040	Bus	135	2.207	0.711	0.030	0.237	0.000	3.185
T26-93	Miami-MDTA	4034	Bus	501	2.435	0.659	0.084	0.307	0.014	3.499
T26-93	Orlando-LYNX	4035	Bus	113	2.752	0.518	0.084	0.434	0.000	3.788
T26-93	St. Petersburg-PSTA	4027	Bus	101	2.832	0.584	0.109	0.475	0.000	4.000
T26-93	Tampa-Hartline	4041	Bus	133	1.985	0.519	0.135	0.429	0.000	3.068

* National Transit Database

APPENDIX 2.

1994 NTD Data Collated for Ranking Florida Mass Transit Agencies on the Basis of Overall Relative Performance

Revenue Vehicle Maintenance Data for Florida Transit Agencies [Table 14, NTD*, 1994]

						Number of Roadcalls		Labor			Number of Maintenance Facilities			
								Hours		General Purpose				
Table ID	Transit Agency	ID/Org	Mode	DO/ VOMS*	Mechanic Reasons	Other Reason	Total Interruptio	for Inspection & Maintenance	Under 200 Vehicles	200-300 Vehicles	Over 300 Vehicles	Total General Facilities	Heavy Facilities	Total Facilities
A	B	C	D	E	F	G	H	I	J	K	L	M	N	O
T14-94	Brevard-SCAT	4063-B	Bus	14	22	1	23	0	0.7	0	0	0.7	0	0.7
T14-94	Daytona Beach-VOTRAN	4032-B	Bus	28	168	101	269	34,392.00	1	0	0	1	0	1
T14-94	Ft. Myers-LeeTran	4028-B	Bus	30	164	21	185	15,485.00	1	0	0	1	0	1
T14-94	Gainesville-RTS	4030-A	Bus	30	263	321	584	12,084.00	0.8	0	0	0.8	0	0.8
T14-94	Lakeland-Citrus Connect	4031-A	Bus	16	87	18	105	12,281.00	0.8	0	0	0.8	0	0.8
T14-94	Pensacola-ECTS	4038-B	Bus	23	31	6	37	20,669.00	1	0	0	1	0	1
T14-94	Sarasota-SCTA	4046-B	Bus	20	70	299	369	7,953.00	1	0	0	1	0	1
T14-94	Tallahassee-TALTRAN	4036-A	Bus	42	360	190	550	27,040.00	0.8	0	0	0.8	0	0.8
T14-94	West Palm-CoTran	4037-B	Bus	57	646	250	896	53,926.00	1	0	0	1	0	1
T14-94	St. Petersburg-PSTA	4027-B	Bus	102	1,322.00	285	1,607.00	119,996.00	1.8	0	0	1.8	0	1.8
T14-94	Orlando-LYNX	4035-B	Bus	136	1,034.00	264	1,298.00	84,610.00	2	0	0	2	0	2
T14-94	Jacksonville-JTA	4040-B	Bus	137	589	164	753	115,679.00	1	0	0	1	0	1
T14-94	Tampa-Hartline	4041-B	Bus	137	2,655.00	309	2,964.00	64,332.00	1	0	0	1	0	1
T14-94	Ft. Lauderdale-Bct	4029-B	Bus	167	1,632.00	86	1,718.00	1,718.00	2	0	0	2	0	2
T14-94	Miami-MDTA	4034-B	Bus	496	9,300.00	4,896.00	14,196.00	365,561.00	0	3	0	3	0	3

* National Transit Database

Transit System Employee Work Hours Personel Count for Florida Transit Agencies [Table 19, NTD*, 1994]

							Employee Work Hours**						Actual Person Count - Full Time Employ.			
Table ID	Transit Agency	ID/Org	DO/ Mode	VOMS*	Vehicle Operation	Vehicle Maintenan	Non-Vehicle Maintenan	General Administra	Total Operating	Capital	Vehicle Operation	Vehicle Maint.	Non-Vehicle Maint.	General Admin.	Total Operating	Capital
A	B	C	D	E	F	G	H	I	J	K	L	M	N	O	P	Q
T19-94	Brevard-SCAT	4063-B	Bus	14	30511	0	0	5712	36223	0	14	0	0	3	17	0
T19-94	Daytona Beach-VOTRAN	4032-B	Bus	28	164466	40734	3632	13057	221889	0	82	12	1	7	102	0
T19-94	Ft. Myers-LeeTran	4028-B	Bus	30	115763	25412	0	8551	149726	0	51	13	0	6	69	0
T19-94	Gainesville-RTS	4030-A	Bus	30	108000	19000	0	12000	139000	0	53	9	0	6	68	0
T19-94	Lakeland-Citrus Connect	4031-A	Bus	16	78958	12281	0	3328	94567	0	32	4	0	2	38	0
T19-94	Pensacola-ECTS	4038-B	Bus	23	90389	20669	6335	7600	124993	0	47	14	4	4	68	0
T19-94	Sarasota-SCTA	4046-B	Bus	20	91785	20929	1641	13553	127908	0	52	11	1	6	70	0
T19-94	Tallahassee-TALTRAN	4036-A	Bus	42	190200	54600	11440	19760	276000	0	72	25	4	9	110	0
T19-94	West Palm-CoTran	4037-B	Bus	57	249891	53926	3765	22182	329764	304	134	30	2	13	179	0
T19-94	Ft. Lauderdale-Bct	4029-B	Bus	167	956800	282880	40604	122720	1403004	0	460	136	21	59	676	0
T19-94	Jacksonville-JTA	4040-B	Bus	137	675325	204969	8517	63258	952069	0	298	95	4	26	423	0
T19-94	Miami-MDTA	4034-B	Bus	496	2712122	753176	92924	315323	3873545	27142	1289	358	44	150	1841	13
T19-94	Orlando-LYNX	4035-B	Bus	136	645781	137110	20843	103605	907339	0	360	75	12	71	518	0
T19-94	St. Petersburg-PSTA	4027-B	Bus	102	598762	119996	17099	88009	823866	0	286	60	9	47	402	0
T19-94	Tampa-Hartline	4041-B	Bus	137	589511	159826	42641	125789	917767	0	264	77	22	62	425	0

* National Transit Database

Transit Accidents Data for Florida Transit Agencies [Table 20, NTD*, 1994]

					Number of Incidents**				Number of Fatalities			Number of Injuries	
Table ID	Transit Agency	ID/Org	DO/ Mode	VOMS*	Collisions	Non-Collisions	Stations	Patrons	Non-Patrons	Total	Patrons	Non-Patrons	Total
A	B	C	D	E	F	G	H	I	J	K	L	M	N
T20-94	Brevard-SCAT	4063-B	Bus	14	0	3	0	0	0	0	3	0	3
T20-94	Daytona Beach-VOTRAN	4032-B	Bus	28	10	0	0	0	0	0	3	2	5
T20-94	Ft. Myers-LeeTran	4028-B	Bus	30	5	6	3	0	0	0	17	3	20
T20-94	Gainesville-RTS	4030-A	Bus	30	8	25	0	0	1	1	16	12	28
T20-94	Lakeland-Citrus Connect	4031-A	Bus	16	5	0	0	0	0	0	0	4	4
T20-94	Pensacola-ECTS	4038-B	Bus	23	10	12	1	0	0	0	18	0	18
T20-94	Sarasota-SCTA	4046-B	Bus	20	3	21	2	0	0	0	24	1	25
T20-94	Tallahassee-TALTRAN	4036-A	Bus	42	28	13	1	0	0	0	25	6	31
T20-94	West Palm-CoTran	4037-B	Bus	57	22	8	0	0	0	0	33	5	38
T20-94	Ft. Lauderdale-Bct	4029-B	Bus	167	418	185	0	0	2	2	200	20	220
T20-94	Jacksonville-JTA	4040-B	Bus	137	52	40	0	0	0	0	35	46	81
T20-94	Miami-MDTA	4034-B	Bus	496	1,032	204	95	0	2	2	312	306	618
T20-94	Orlando-LYNX	4035-B	Bus	136	8	32	3	0	0	0	62	0	62
T20-94	St. Petersburg-PSTA	4027-B	Bus	102	110	32	2	0	0	0	90	1	91
T20-94	Tampa-Hartline	4041-B	Bus	137	175	52	6	0	0	0	88	29	117

* National Transit Database

Transit Operations Statistics (Service Supplied and Consumed) for Florida Transit Agencies [Table 21, NTD* , 1994]

Table ID	Transit Agency	ID/Org	Mode	Vehicle Operated in Maximum Service	Vehicles Available for Maximum Service	Revenue Miles Annual Scheduled Vehicle	Miles Annual Vehicle	Revenue Miles Annual Actual Vehicle	Hours Annual Vehicle	Hours Annual Vehicle Revenue	Trips Annual Unlinked Passenger	Miles Annual Passenger
						Transit Service Supplied (in thousands)					Service Consumed (in thousands)	
A	B	C	D	E	F	G	H	I	J	K	L	M
T21-94	Brevard-SCAT	4063-B	Bus	14	28	376.4	425.5	376.4	19.6	17.4	142.9	1,606.10
T21-94	Daytona Beach-VOTRAN	4032-B	Bus	28	37	1,587.90	1,687.40	1,564.60	118.7	110.1	3,173.10	10,217.30
T21-94	Ft. Myers-LeeTran	4028-B	Bus	30	37	1,682.90	1,803.50	1,681.40	98.8	93.1	1,780.30	9,890.70
T21-94	Gainesville-RTS	4030-A	Bus	30	43	1,409.60	1,424.90	1,409.60	74.3	69.9	2,370.20	7,169.20
T21-94	Lakeland-Citrus Connect	4031-A	Bus	16	21	927	937.6	926.7	54.5	53.9	1,076.00	4,552.90
T21-94	Pensacola-ECTS	4038-B	Bus	23	29	1,029.90	1,038.60	999.7	74.5	71.7	1,323.40	6,427.60
T21-94	Sarasota-SCTA	4046-B	Bus	20	42	1,060.00	1,120.30	1,058.00	77.6	73.8	1,302.10	5,687.80
T21-94	Tallahassee-TALTRAN	4036-A	Bus	42	55	1,497.10	1,589.10	1,489.30	134.1	129.3	3,526.00	10,578.00
T21-94	West Palm-CoTran	4037-B	Bus	57	71	2,920.30	3,322.50	2,896.70	212.6	197.5	2,714.60	17,380.40
T21-94	Ft. Lauderdale-Bct	4029-B	Bus	167	196	9,111.90	9,875.60	9,087.20	692.4	662.2	22,270.80	102,134.30
T21-94	Jacksonville-JTA	4040-B	Bus	137	162	6,618.60	6,897.80	6,584.50	485.9	473.2	9,356.70	49,839.00
T21-94	Miami-MDTA	4034-B	Bus	496	604	22,990.30	25,428.50	22,423.80	1,970.40	1,818.70	63,225.90	255,855.20
T21-94	Orlando-LYNX	4035-B	Bus	136	163	7,073.20	7,660.10	7,110.20	587.3	550.1	11,936.80	63,794.20
T21-94	St. Petersburg-PSTA	4027-B	Bus	102	183	6,217.10	6,732.50	6,206.00	455.3	432.4	8,083.60	40,648.10
T21-94	Tampa-Hartline	4041-B	Bus	137	167	5,558.60	6,343.20	5,550.70	447	412	9,896.60	43,998.60

* National Transit Database

Performance indicators Data (Based on Vehicles Operated, Veh Revenue Miles and Hours) for Florida Transit Agencies [Table 23, NTD*, 1994]

					Maximum Number of Vehicles		Vehicles	Annual Actual Vehicle Revenue Miles			Actual Vehicle Revenue Hrs		
					Operated in	Operated in	Operated in	Per Vehicle	Per	Per Vehicle	Per Direct	Per Vehicle	Per
			DO/		Average PM	Average	Max. Service	Operated in	Employee	Revenue Hour	tional Mile	Operated in	Employee
Table II	Transit Agency	ID/Org	Mode	VOMS*	Peak Period	Base Period	Per Dir. Mile	Max. Service	Work Hou	(MPH)	(DRM)	Max. Service	Work Hour
A	B	C	D	E	F	G	H	I	J	K	L	M	N
T23-94	Brevard-SCAT	4063-B	Bus	14	0.0	0.0	0.0	26,883.2	10.4	21.7	913.5	1,240.6	0.5
T23-94	Daytona Beach-VOTRAN	4032-B	Bus	28	0.0	0.0	0.1	55,879.8	7.1	14.2	5,681.3	3,932.1	0.5
T23-94	Ft. Myers-LeeTran	4028-B	Bus	30	26.0	26.0	0.1	56,045.3	11.2	18.1	4,456.3	3,103.4	0.6
T23-94	Gainesville-RTS	4030-A	Bus	30	28.0	21.0	0.1	46,986.1	10.1	20.2	5,281.3	2,329.0	0.5
T23-94	Lakeland-Citrus Conne	4031-A	Bus	16	0.0	0.0	0.1	57,921.1	9.8	17.2	5,756.1	3,370.9	0.6
T23-94	Pensacola-ECTS	4038-B	Bus	23	23.0	20.0	0.1	43,465.2	8.0	13.9	4,085.4	3,117.4	0.6
T23-94	Sarasota-SCTA	4046-B	Bus	20	0.0	0.0	0.1	52,898.9	8.3	14.3	3,618.3	3,688.8	0.6
T23-94	Tallahassee-TALTRAN	4036-A	Bus	42	42.0	40.0	0.2	35,459.5	5.4	11.5	7,629.6	3,077.4	0.5
T23-94	West Palm-CoTran	4037-B	Bus	57	57.0	44.0	0.1	50,818.7	8.8	14.7	5,939.4	3,464.8	0.6
T23-94	St. Petersburg-PSTA	4027-B	Bus	102	100.0	102.0	0.1	60,842.8	7.5	14.4	3,644.1	4,239.6	0.5
T23-94	Orlando-LYNX	4035-B	Bus	136	110.0	133.0	0.2	52,280.6	7.8	12.9	10,888.5	4,044.5	0.6
T23-94	Jacksonville-JTA	4040-B	Bus	137	134.0	83.0	0.1	48,061.9	6.9	13.9	5,661.6	3,453.7	0.5
T23-94	Tampa-Hartline	4041-B	Bus	137	137.0	91.0	0.1	40,516.4	6.0	13.5	3,808.4	3,007.5	0.4
T23-94	Ft. Lauderdale-Bct	4029-B	Bus	167	148.0	167.0	0.3	54,414.3	6.5	13.7	14,544.1	3,965.4	0.5
T23-94	Miami-MDTA	4034-B	Bus	496	491.0	339.0	0.3	45,209.3	5.7	12.3	14,942.2	3,666.8	0.5

* National Transit Database

Performance Indicators (Operating Expenses) for Florida Transit Agencies [Table 24, NTD*, 1994]

						Total Operating Expenses					Total Operating Expenses by Function		
					Per Vehicl	Per Vehicl	Per Unlink	Per	Per	Veh. Oper	Veh. Maint.	Non-Veh. Maint	Gen. Admin
				DO/	Operated i	Revenue	Passenge	Passenge	Employee	Per Vehicl	Per Vehicle	Per Vehicle	Per Vehicle
Table ID	Transit Agency	ID/Org	Mode	VOMS*	Max. Servi	(VRH)	(UPT)	Mile	Work Hour	Revenue	Revenue Mile	Revenue Mile	Revenue Mile
A	B	C	D	E	F	G	H	I	J	K	L	M	N
T24-94	Brevard-SCAT	4063-B	Bus	14	67112	54	7	1	26	2	1	0	0
T24-94	Daytona Beach-VOTRAN	4032-B	Bus	29	9285	19	8	1	11	1	0	0	0
T24-94	Ft. Myers-LeeTran	4028-B	Bus	30	119100	38	2	0	24	1	1	0	0
T24-94	Gainesville-RTS	4030-A	Bus	30	117381	50	2	1	25	2	0	0	0
T24-94	Lakeland-Citrus Connect	4031-A	Bus	16	104630	31	2	0	18	1	0	0	0
T24-94	Pensacola-ECTS	4038-B	Bus	23	140635	45	2	1	26	2	1	0	1
T24-94	Sarasota-SCTA	4046-B	Bus	20	147014	40	2	1	23	2	0	0	1
T24-94	Tallahassee-TALTRAN	4036-A	Bus	42	143888	47	2	1	22	2	1	0	1
T24-94	West Palm-CoTran	4037-B	Bus	57	177664	51	4	1	31	2	1	0	1
T24-94	Ft. Lauderdale-Bct	4029-B	Bus	167	232248	59	2	0	28	3	1	0	0
T24-94	Jacksonville-JTA	4040-B	Bus	132	359908	138	3	5	37	4	2	3	1
T24-94	Miami-MDTA	4034-B	Bus	496	240636	66	2	1	31	3	1	0	1
T24-94	Orlando-LYNX	4035-B	Bus	136	185986	46	2	0	28	2	1	0	1
T24-94	St. Petersburg-PSTA	4027-B	Bus	102	224015	53	3	1	28	2	1	0	1
T24-94	Tampa-Hartline	4041-B	Bus	137	167720	56	2	1	25	2	1	0	1

* National Transit Database

Performance Indicators Data (Passenger Trips, Passenger Miles, and Vehicle Miles [Table 25, NTD*, 1994]

						Annual Passenger Miles			Annual Unlinked Passenger Trips			Annual Vehicle
Table ID	Transit Agency	ID/ Org	DO/ Mode	VOMS*	Per Directional Mile in Thousands (DRM)	Per Veh. Operated in Max. Service in Thousands	Per Vehicle Revenue Hour (VRH)	Per Directional Mile in Thousands (DRM)	Per Actual Vehicle Rev. Mile (VRM)	Per Employee Work Hour	Per Vehicle Revenue Hour (VRH)	Miles Per Dollar Vehicle Maintenance Expense
A	B	C	D	E	F	G	H	I	J	K	L	M
T25-94	Brevard-SCAT	4063-B	Bus	14	4	115	92	0	0	4	8	2
T25-94	Daytona Beach-VOTRAN	4032-B	Bus	28	37	365	93	12	2	14	29	1
T25-94	Ft. Myers-LeeTran	4028-B	Bus	30	26	330	106	5	1	12	19	2
T25-94	Gainesville-RTS	4030-A	Bus	30	27	239	103	9	2	17	34	3
T25-94	Lakeland-Citrus Connect	4031-A	Bus	16	28	285	84	7	1	11	20	3
T25-94	Pensacola-ECTS	4038-B	Bus	23	26	279	90	5	1	11	18	2
T25-94	Sarasota-SCTA	4046-B	Bus	20	19	284	77	4	1	10	18	3
T25-94	Tallahassee-TALTRAN	4036-A	Bus	42	54	252	82	18	2	13	27	1
T25-94	West Palm-CoTran	4037-B	Bus	57	36	305	88	6	1	8	14	2
T25-94	Ft. Lauderdale-Bct	4029-B	Bus	167	163	612	154	36	2	16	34	1
T25-94	Jacksonville-JTA	4040-B	Bus	137	43	364	105	8	1	10	20	2
T25-94	Miami-MDTA	4034-B	Bus	496	170	516	141	42	3	16	35	1
T25-94	Orlando-LYNX	4035-B	Bus	136	98	469	116	18	2	13	22	2
T25-94	St. Petersburg-PSTA	4027-B	Bus	102	24	399	94	5	1	10	19	2
T25-94	Tampa-Hartline	4041-B	Bus	137	30	321	107	7	2	11	24	2

* National Transit Database

Performance Indicators Data (Directly Operated Service-Hours) for Florida Transit Agencies [Table 26, NTD*, 1994]

Table ID	Transit Agency	ID/Org	DO/ Mode	VOMS*	Vehicle Operations Per Vehicle Operated in Hours Maximum Service	Vehicle Hours Per Vehicle Operated in Maintenance Maximum Service	Non-Vehicle Hours Per Vehicle Operated in Maintenance Maximum Service	Administration Per Vehicle Operated in Hours Maximum Service	Capital Per Vehicle Operated in Hours Maximum Service	Total System Vehicles Operated in Hours Per Maximum Service
A	B	C	D	E	F	G	H	I	J	K
T26-94	Brevard-SCAT	4063-B	Bus	14	2,179.36	0.00	0.00	408.00	0.00	2,587.36
T26-94	Daytona Beach-VOTRAN	4032-B	Bus	28	5,873.79	1,454.79	129.71	466.32	0.00	7,924.61
T26-94	Ft. Myers-LeeTran	4028-B	Bus	30	3,858.77	847.07	0.00	285.03	0.00	4,990.87
T26-94	Gainesville-RTS	4030-A	Bus	30	3,600.00	633.33	0.00	400.00	0.00	4,633.33
T26-94	Lakeland-Citrus Connect	4031-A	Bus	16	4,934.88	767.56	0.00	208.00	0.00	5,910.44
T26-94	Pensacola-ECTS	4038-B	Bus	23	3,929.96	898.65	275.43	330.43	0.00	5,434.48
T26-94	Sarasota-SCTA	4046-B	Bus	20	4,589.25	1,046.45	82.05	677.65	0.00	6,395.40
T26-94	Tallahassee-TALTRAN	4036-A	Bus	42	4,528.57	1,300.00	272.38	470.48	0.00	6,571.43
T26-94	West Palm-CoTran	4037-B	Bus	57	4,384.05	946.07	66.05	389.16	5.33	5,790.67
T26-94	Ft. Lauderdale-Bct	4029-B	Bus	167	5,729.34	1,693.89	243.14	734.85	0.00	8,401.22
T26-94	Jacksonville-JTA	4040-B	Bus	137	4,929.38	1,496.12	62.17	461.74	0.00	6,949.41
T26-94	Miami-MDTA	4034-B	Bus	496	5,467.99	1,518.50	187.35	635.73	54.72	7,864.29
T26-94	Orlando-LYNX	4035-B	Bus	136	4,748.39	1,008.16	153.26	761.80	0.00	6,671.61
T26-94	St. Petersburg-PSTA	4027-B	Bus	102	5,870.22	1,176.43	167.64	862.83	0.00	8,077.12
T26-94	Tampa-Hartline	4041-B	Bus	137	4,303.00	1,166.61	311.25	918.17	0.00	6,699.03

* National Transit Database

APPENDIX 2.

1995 NTD Data Collated for Ranking Florida Mass Transit Agencies on the Basis of Overall Relative Performance

Revenue Vehicles Maintenance Data for Florida transit Agencies [Table 14, NTD*, 1995]

Table ID	Transit Agency	ID/ Org	Mode	DO/ VOMS*	Number of Roadca: Mechanic Reasons	Number of Roadca: Other Reasons	Number of Roadca: Total Interruptio	Labor Hours for Inspectio & Mainten	Under 200 Vehicles	General Purpose 200-300 Vehicles	General Purpose Over 300 Vehicles	Number of Maintenance Facilitie: Total General Facilities	Number of Maintenance Facilitie: Heavy Facilities	Number of Maintenance Facilitie: Total Facilities
A	B	C	D	E	F	G	H	I	J	K	L	M	N	O
T14-95	Brevard-SCAT	4063-B	Bus	14	25	5	30	0.0	0.800	0.000	0.000	0.800	0.000	0.800
T14-95	Lakeland-Citrus Conn	4031-A	Bus	17	122	41	163	16172.0	0.800	0.000	0.000	0.800	0.000	0.800
T14-95	Sarasota-SCTA	4046-B	Bus	25	71	419	490	8426.0	1.000	0.000	0.000	1.000	0.000	1.000
T14-95	Pensacola-ECTS	4038-B	Bus	26	38	9	47	22205.0	1.000	0.000	0.000	1.000	0.000	1.000
T14-95	Ft. Myers-LeeTran	4028-B	Bus	27	196	18	214	13248.0	1.000	0.000	0.000	1.000	0.000	1.000
T14-95	Gainesville-RTS	4030-A	Bus	31	348	223	571	9426.0	0.800	0.000	0.000	0.800	0.000	0.800
T14-95	Daytona Beach-VOTR	4032-B	Bus	36	323	94	417	37930.0	1.000	0.000	0.000	1.000	0.000	1.000
T14-95	Tallahassee-TALTRA	4036-B	Bus	44	63	35	98	27439.0	0.800	0.000	0.000	0.800	0.000	0.800
T14-95	West Palm-CoTran	4037-B	Bus	58	691	357	1048	58758.0	1.000	0.000	0.000	1.000	0.000	1.000
T14-95	St. Petersburg-PSTA	4027-B	Bus	103	665	220	885	105450.0	1.800	0.000	0.000	1.800	0.000	1.800
T14-95	Tampa-Hartline	4041-B	Bus	119	1769	287	2056	51615.0	1.000	0.000	0.000	1.000	0.000	1.000
T14-95	Jacksonville-JTA	4040-B	Bus	139	615	138	753	98031.0	1.000	0.000	0.000	1.000	0.000	1.000
T14-95	Orlando-LYNX	4035-B	Bus	144	928	439	1367	96610.0	1.000	0.000	0.000	1.000	0.000	1.000
T14-95	Ft. Lauderdale-Bct	4029-B	Bus	155	1901	100	2001	239200.0	2.000	0.000	0.000	2.000	0.000	2.000
T14-95	Miami-MDTA	4034-B	Bus	487	10334	5084	15418	376737.0	0.000	3.000	0.000	3.000	0.000	3.000

* National Transit Database

System Employee Work Hours, Personnl Count for Florida Transit Agencies [Table 19, NTD*, 1995]

						Employee Work Hours**						Actual Person Count - Full Time Employees***				
Table ID	Transit Agency	,ID/Org,	Mode,	DO/ VOMS*	Vehicle Operation	Vehicle Maintenan	Non-Vehicle Maintenan	General Admin.	Total Operating	Capital	Vehicle Operation	Vehicle Maint.	Non-Vehicle Maint.	General Admin.	Total Operating	Capital
A	B	C	D	E	F	G	H	I	J	K	L	M	N	O	P	Q
T19-95	Brevard-S	4063-B	Bus	14	35505	0	0	4452	39957	0	14.1	0.0	0.0	2.1	16.2	0.0
T19-95	Lakeland-	4031-A	Bus	17	82174	16172	1079	8550	107975	0	31.0	5.0	0.0	3.0	39.0	0.0
T19-95	Sarasota-	4046-B	Bus	25	117306	21274	1904	12219	152703	0	64.3	11.0	0.8	6.0	82.0	0.0
T19-95	Pensacola	4038-B	Bus	26	94414	22205	2806	7842	127267	0	48.0	13.5	1.5	4.0	67.0	0.0
T19-95	Ft. Myers-	4028-B	Bus	27	118057	25147	0	11942	155146	0	52.2	14.0	0.0	7.0	73.2	0.0
T19-95	Gainesvill	4030-A	Bus	31	116000	23000	1500	13000	153500	0	58.0	11.0	0.7	6.0	75.7	0.0
T19-95	Daytona B	4032-B	Bus	36	176798	37930	6436	32017	253181	0	83.0	16.8	3.0	14.0	116.8	0.0
T19-95	Tallahass	4036-B	Bus	44	190636	54600	11440	19760	276436	0	73.0	25.0	4.0	9.0	111.0	0.0
T19-95	West Pal	4037-B	Bus	58	260796	58758	4769	29599	353922	0	140.0	29.8	2.8	18.5	191.0	0.0
T19-95	St. Peters	4027-B	Bus	103	526178	105450	15026	77340	723994	0	253.0	51.0	7.0	37.0	348.0	0.0
T19-95	Tampa-Ha	4041-B	Bus	119	569497	154177	40349	126204	890227	0	252.0	73.0	22.0	62.0	409.0	0.0
T19-95	Jacksonvil	4040-B	Bus	139	662423	176693	6969	61568	907653	0	309.0	94.0	4.0	27.0	434.0	0.0
T19-95	Orlando-L	4035-B	Bus	144	768974	169122	24634	100410	1063140	0	397.0	82.0	11.0	56.0	546.0	0.0
T19-95	Ft. Lauder	4029-B	Bus	155	902720	239200	43680	191360	1376960	0	434.0	115.0	21.0	92.0	662.0	0.0
T19-95	Miami-MD	4034-B	Bus	487	2685701	779154	93919	318205	3876979	63871	1256.0	364.0	44.0	149.0	1813.0	29.0

* National Transit Database

Transit Accidents Data for Florida Transit Agencies [Table 20, NTD*, 1995]

						Collisions*				Non-Collisions**							
								Derailments/		Personal Casualties							
					Total	Total	Attempte	Buses					In		Non-arson	res	Transit
				DO/	Collisions	Collisions	Successf	Going off	Parking	Inside	On Right	Boarding/	Stations/	In	In	Right-of-	Property
Table ID	Transit Agency	ID/Org	Mode	VOMS*		at Grade Crossings	Suicides	Road	Facility	Vehicle	of Way	Alighting	Bus Stop	Vehicle	Stations	Way & Others	Damage
A	B	C	D	E	F	G	H	I	J	K	L	M	N	O	P	Q	R
T20-95	Brevard-SCAT	4063-B	Bus	14	3	0	0	0	0	0	0	3	1	0	0	0	3000
T20-95	Lakeland-Citrus Conn	4031-A	Bus	17	4	0	0	0	0	1	0	1	0	0	0	0	4960
T20-95	Sarasota-SCTA	4046-B	Bus	25	8	0	0	0	0	10	0	2	0	0	0	0	8234
T20-95	Pensacola-ECTS	4038-B	Bus	26	8	0	0	0	2	5	0	3	0	0	0	0	5220
T20-95	Ft. Myers-LeeTran	4028-B	Bus	27	4	0	0	0	0	4	0	2	1	0	0	0	46059
T20-95	Gainesville-RTS	4030-A	Bus	31	25	0	0	0	0	23	0	7	0	0	0	0	21500
T20-95	Daytona Beach-VOT	4032-B	Bus	36	4	0	0	0	0	3	0	0	0	0	0	0	33345
T20-95	Tallahassee-TALTRA	4036-B	Bus	44	12	0	0	1	0	27	0	16	2	0	0	0	18500
T20-95	West Palm-CoTran	4037-B	Bus	58	15	0	0	0	10	17	0	18	4	2	0	0	15786
T20-95	St. Petersburg-PSTA	4027-B	Bus	103	57	0	0	0	0	12	0	1	1	0	0	0	54050
T20-95	Tampa-Hartline	4041-B	Bus	119	53	0	0	0	1	157	0	46	15	1	0	0	74206
T20-95	Jacksonville-JTA	4040-B	Bus	139	49	0	0	0	1	29	0	37	4	1	0	0	30001
T20-95	Orlando-LYNX	4035-B	Bus	144	15	0	0	0	0	38	0	16	0	1	0	0	154730
T20-95	Ft. Lauderdale-Bct	4029-B	Bus	155	182	0	0	0	0	29	0	15	3	1	0	0	96029
T20-95	Miami-MDTA	4034-B	Bus	487	314	0	1	0	3	93	0	36	62	2	1	9	219526

* National Transit Database

Transit Operation Statistics (Service Supplied Service Consumed) for Florida Transit Agencies [Table 26, NTD* , 1995]

Table ID	Transit Agency	ID/ Org	Mode	Vehicles Operated in Maximu Service	Vehicles Available for Maximu Service	Transit Service Supplied (in Thousand: Annual Schedule Vehicle Revenue Miles	Annual Vehicle Miles	Annual Actual Vehicle Revenue Miles	Annual Vehicle Hours	Annual Vehicle Revenue Hours	Transit Service Consumed (in Thousands): Annual Unlinked Passenge Trips	Annual Passenger Miles
A	B	C	D	E	F	G	H	I	J	K	L	M
T26-95	Brevard-SCAT	4063-B	Bus	14	27	504.9	556.9	502.7	26.1	23.6	168.8	1282.5
T26-95	Lakeland-Citrus Connect	4031-A	Bus	17	21	940.9	946.1	940.9	64.6	63.1	1135.4	4655.3
T26-95	Sarasota-SCTA	4046-B	Bus	25	40	1344.4	1455.1	1342.9	96.6	90.5	1618.9	7071.7
T26-95	Pensacola-ECTS	4038-B	Bus	26	34	1057.9	1062.4	1025.8	76.4	73.9	1455.7	7070.1
T26-95	Ft. Myers-LeeTran	4028-B	Bus	27	37	1640.5	1759.7	1639.1	97.6	92.1	1604.2	8903.2
T26-95	Gainesville-RTS	4030-A	Bus	31	47	1409.6	1414.6	1399.5	73.8	69.4	2047.5	6081.0
T26-95	Daytona Beach-VOTRAN	4032-B	Bus	36	53	2039.6	2224.0	2044.5	139.9	128.7	3522.1	11341.2
T26-95	Tallahassee-TALTRAN	4036-B	Bus	44	55	1526.4	1617.9	1516.2	137.3	131.5	3614.2	10842.5
T26-95	West Palm-CoTran	4037-B	Bus	58	92	3057.7	3459.4	3054.4	212.9	196.6	2714.6	17380.4
T26-95												
T26-95	St. Petersburg-PSTA	4027-B	Bus	103	145	6395.8	6928.0	6395.8	465.4	442.8	8042.0	39826.1
T26-95	Tampa-Hartline	4041-B	Bus	119	154	5754.2	6556.4	5749.0	453.3	418.1	10036.6	44508.1
T26-95	Jacksonville-JTA	4040-B	Bus	139	165	6485.1	6851.6	6451.7	484.8	472.1	8845.4	46315.8
T26-95	Orlando-LYNX	4035-B	Bus	144	177	8460.6	9202.9	8514.3	643.6	600.8	13452.3	85298.0
T26-95	Ft. Lauderdale-Bct	4029-B	Bus	155	195	9231.1	9965.6	9193.3	695.4	666.8	23377.9	109011.8
T26-95	Miami-MDTA	4034-B	Bus	487	626	23068.4	25580.1	22417.9	1943.1	1796.9	61582.1	244192.4

* National Transit Database

Performance Indicators Data (Based on Veh Operated, Veh Revenue Miles Hours) for Florida Transit Agencies [Table 28, NTD*, 1995]

Table ID	Transit Agency	,ID/Org,	Mode,	DO/ , VOMS*,	Maximum Number of Operated Average Peak Peri	Operated Average Base Peri	Vehicles Operated Max. Ser Per Dir. Mi	Annual Actual Vehicle Revenues Per Vehic Operated Max. Ser	Per , Employe Work Hou	Per Vehic Revenue (MPH)	Per , Directional Mile (DRM	Actual Vehicle Revenue Hrs, Per Vehic Operated Max. Ser	Per , Employee , Work Hour ,
A	B	C	D	E	F	G	H	I	J	K	L	M	N
T28-95	Brevard-SCAT	4063-B	Bus	14	0	0	0.032	35906.0	12.581	21.309	1132.2	1685.0	0.590
T28-95	Daytona Beach-VOTRAN	4032-B	Bus	36	0	0	0.092	56793.0	8.075	15.885	5205.1	3575.2	0.508
T28-95	Ft. Myers-LeeTran	4028-B	Bus	27	24	24	1.776	60705.7	10.565	17.795	107832.4	3411.5	0.594
T28-95	Gainesville-RTS	4030-A	Bus	31	31	24	0.116	45145.2	9.117	20.176	5243.5	2237.6	0.452
T28-95	Lakeland-Citrus Connect	4031-A	Bus	17	16	16	0.105	55349.5	8.714	14.922	5790.4	3709.2	0.584
T28-95	Pensacola-ECTS	4038-B	Bus	26	26	25	0.106	39453.9	8.060	13.878	4192.1	2842.8	0.581
T28-95	Sarasota-SCTA	4046-B	Bus	25	25	25	0.072	53716.0	8.794	14.845	3863.3	3618.4	0.592
T28-95	Tallahassee-TALTRAN	4036-B	Bus	44	44	40	0.221	34458.1	5.485	11.526	7607.4	2989.7	0.476
T28-95	West Palm-CoTran	4037-B	Bus	58	58	45	0.117	52662.0	8.630	15.538	6158.1	3389.3	0.555
T28-95	Ft. Lauderdale-Bct	4029-B	Bus	155	155	148	0.625	59311.8	6.677	13.786	37069.9	4302.2	0.484
T28-95	Jacksonville-JTA	4040-B	Bus	139	139	83	0.120	46415.4	7.108	13.667	5547.5	3396.3	0.520
T28-95	Miami-MDTA	4034-B	Bus	487	487	335	42.719	46032.7	5.689	12.476	1966483.7	3689.8	0.456
T28-95	Orlando-LYNX	4035-B	Bus	144	144	133	0.211	59127.3	8.009	14.171	12502.7	4172.6	0.565
T28-95	St. Petersburg-PSTA	4027-B	Bus	103	100	103	0.061	62095.4	8.834	14.445	3760.0	4298.7	0.612
T28-95	Tampa-Hartline	4041-B	Bus	119	119	79	1.221	48310.6	6.458	13.751	58963.7	3513.2	0.470

* National Transiit Database

Performance Indicators (Operating Expenses) for Florida Transit Agencies [Table 29, NTD*, 1995]

						Total Operating Expenses				Total Operating Expenses by			
Table ID	Transit Agency	,ID/Org,	Mode,	DO/ , VOMS*,	Per Vehicl Operated i Max Servi	Per Vehicl Revenue (VRH) ,	Per Unlink Passeng Trip (UPT	Per , Passenge Mile ,	Per , Employe Work Hou	Veh. Ope Per Vehicl Revenue	Veh. Main Per Vehicl Revenue	Non-Veh Per Vehic Revenue	tion , Gen. Admin. , Per Vehicle , Revenue Mi. ,
A	B	C	D	E	F	G	H	I	J	K	L	M	N
T29-95	Brevard-SCAT	4063-B	Bus	14	81472.9	48.352	6.759	0.889	28.546	1.381	0.541	0.015	0.332
T29-95	Daytona Beach-VOTRAN	4032-B	Bus	36	145345.0	40.654	1.486	0.461	20.667	1.524	0.333	0.030	0.672
T29-95	Ft. Myers-LeeTran	4028-B	Bus	27	140200.5	41.097	2.360	0.425	24.399	1.365	0.459	0.025	0.461
T29-95	Gainesville-RTS	4030-A	Bus	31	131382.0	58.716	1.989	0.670	26.533	2.088	0.325	0.012	0.485
T29-95	Lakeland-Citrus Connect	4031-A	Bus	17	127643.2	34.413	1.911	0.466	20.097	1.373	0.484	0.011	0.438
T29-95	Pensacola-ECTS	4038-B	Bus	26	130379.0	45.862	2.329	0.479	26.636	1.821	0.601	0.156	0.726
T29-95	Sarasota-SCTA	4046-B	Bus	25	133568.7	36.913	2.063	0.472	21.867	1.810	0.306	0.025	0.346
T29-95	Tallahassee-TALTRAN	4036-B	Bus	44	142731.8	47.741	1.738	0.579	22.718	2.179	0.778	0.115	1.071
T29-95	West Palm-CoTran	4037-B	Bus	58	182815.9	53.940	3.906	0.610	29.959	2.095	0.626	0.057	0.694
T29-95	Ft. Lauderdale-Bct	4029-B	Bus	155	264271.6	61.427	1.752	0.376	29.748	2.932	0.970	0.117	0.436
T29-95	Jacksonville-JTA	4040-B	Bus	139	156795.7	46.167	2.464	0.471	24.012	2.039	0.614	0.071	0.653
T29-95	Miami-MDTA	4034-B	Bus	487	245113.1	66.430	1.938	0.489	30.290	3.408	1.132	0.188	0.596
T29-95	Orlando-LYNX	4035-B	Bus	144	212685.6	50.972	2.277	0.359	28.808	1.942	0.606	0.089	0.960
T29-95	St. Petersburg-PSTA	4027-B	Bus	103	223205.4	51.924	2.859	0.577	31.755	2.184	0.596	0.097	0.717
T29-95	Tampa-Hartline	4041-B	Bus	119	196433.0	55.912	2.329	0.525	26.258	2.112	0.732	0.144	1.078

* National Transit Database

Performance Indicators Data (Passenger Trips, Passenger Miles, Veh Miles) for Florida Transit Agencies [Table 30, NTD*, 1995]

Table ID	Transit Agency	ID/ Org	Mode	DO/ VOMS*	Annual Passenge Per Directi Mile in Thousan (DRM)	Per Vehic Operated Max. Servi in Thousa	Per Vehic Revenue Hour (VRH)	Annual Unlinked Passenger Per Directi Mile in Thousan (DRM)	Per Actua Vehicle Rev. Mile (VRM)	Per Employe Work Hour	Per Vehic Revenue Hour (VRH)	Annual Vehicle, Miles Per Dollar Vehicle, Maintenance Expense
A	B	C	D	E	F	G	H	I	J	K	L	M
T30-95	Brevard-SCAT	4063-B	Bus	14	2.9	91.6	54.4	0.38	0.34	4.22	7.15	2.05
T30-95	Daytona Beach-VOTRAN	4032-B	Bus	36	28.9	315.0	88.1	8.97	1.72	13.91	27.37	3.27
T30-95	Ft. Myers-LeeTran	4028-B	Bus	27	585.7	329.7	96.7	105.54	0.98	10.34	17.42	2.34
T30-95	Gainesville-RTS	4030-A	Bus	31	22.8	196.2	87.7	7.67	1.46	13.34	29.52	3.11
T30-95	Lakeland-Citrus Connect	4031-A	Bus	17	28.6	273.8	73.8	6.99	1.21	10.52	18.01	2.08
T30-95	Pensacola-ECTS	4038-B	Bus	26	28.9	271.9	95.7	5.95	1.42	11.44	19.69	1.72
T30-95	Sarasota-SCTA	4046-B	Bus	25	20.3	282.9	78.2	4.66	1.21	10.60	17.90	3.54
T30-95	Tallahassee-TALTRAN	4036-B	Bus	44	54.4	246.4	82.4	18.13	2.38	13.07	27.47	1.37
T30-95	West Palm-CoTran	4037-B	Bus	58	35.0	299.7	88.4	5.47	0.89	7.67	13.81	1.81
T30-95	Ft. Lauderdale-Bct	4029-B	Bus	155	439.6	703.3	163.5	94.27	2.54	16.98	35.06	1.12
T30-95	Jacksonville-JTA	4040-B	Bus	139	39.8	333.2	98.1	7.61	1.37	9.75	18.74	1.73
T30-95	Miami-MDTA	4034-B	Bus	487	21420.4	501.4	135.9	5401.94	2.75	15.63	34.27	1.01
T30-95	Orlando-LYNX	4035-B	Bus	144	125.3	592.3	142.0	19.75	1.58	12.65	22.39	1.78
T30-95	St. Petersburg-PSTA	4027-B	Bus	103	23.4	386.7	89.9	4.73	1.26	11.11	18.16	1.82
T30-95	Tampa-Hartline	4041-B	Bus	119	456.5	374.0	106.5	102.94	1.75	11.27	24.01	1.56

* National Transit Database

Performance Indicators Data (Directly Operated Service-Hours) for Florida Transit Agencies [Table 31, NTD*, 1995]

Table ID	Transit Agency	,ID/Org,	Mode,	DO/ , VOMS*,	Vehicle O Hours Per Veh Operate Maximu	Vehicl Mainten Hours Veh. Ope Maximu	Non-Ve Mainten Hours Veh. Ope Maximu	Administr Hours Per Veh Operate Maximu	Capita Hours Per Veh Operate Maximu	Total System Hours Per Vehicles Operated in Maximum Service
A	B	C	D	E	F	G	H	I	J	K
T31-95	Brevard-SCAT	4063-B	Bus	14	2536.07	0.00	0.00	318.00	0.00	2854.07
T31-95	Daytona Beach-VOTRAN	4032-B	Bus	36	4911.06	1053.61	178.78	889.36	0.00	7032.81
T31-95	Ft. Myers-LeeTran	4028-B	Bus	27	4372.48	931.37	0.00	442.30	0.00	5746.15
T31-95	Gainesville-RTS	4030-A	Bus	31	3741.94	741.94	48.39	419.35	0.00	4951.61
T31-95	Lakeland-Citrus Connect	4031-A	Bus	17	4833.76	951.29	63.47	502.94	0.00	6351.47
T31-95	Pensacola-ECTS	4038-B	Bus	26	3631.31	854.04	107.92	301.62	0.00	4894.88
T31-95	Sarasota-SCTA	4046-B	Bus	25	4692.24	850.96	76.16	488.76	0.00	6108.12
T31-95	Tallahassee-TALTRAN	4036-B	Bus	44	4332.64	1240.91	260.00	449.09	0.00	6282.64
T31-95	West Palm-CoTran	4037-B	Bus	58	4496.48	1013.07	82.22	510.33	0.00	6102.10
T31-95	Ft. Lauderdale-Bct	4029-B	Bus	155	5824.00	1543.23	281.81	1234.58	0.00	8883.61
T31-95	Jacksonville-JTA	4040-B	Bus	139	4765.63	1271.17	50.14	442.94	0.00	6529.88
T31-95	Miami-MDTA	4034-B	Bus	487	5514.79	1599.91	192.85	653.40	131.15	8092.09
T31-95	Orlando-LYNX	4035-B	Bus	144	5340.10	1174.46	171.07	697.29	0.00	7382.92
T31-95	St. Petersburg-PSTA	4027-B	Bus	103	5108.52	1023.79	145.88	750.87	0.00	7029.07
T31-95	Tampa-Hartline	4041-B	Bus	119	4785.69	1295.61	339.07	1060.54	0.00	7480.90

* National Transit Database

APPENDIX 3.

1991-1995 NTD Data Collated for Assessing Performance Trend of Florida Mass Transit Agencies on the Basis of Overall Relative Performance

Revenue Vehicle Maintenance Data for Selected Florida Transit Agencies [NTD* Table 12 in 1991 and Table 14 in 1992 thru 1995]

					<----Number of Roadcalls---->				<------Number of Light Maintenance----->						
									Facilities Serving						
Year	State	Transit Agency	Mode	Total Vehicles Operated in Max. Service	Mechan-ical Failure	Other Reasons	Total Road-calls	Labor Hours for Inspection & Main-tenance	Under 200 Vehicles	200-300 Vehicles	Over 300 Vehicles	Total Facil-ities			
A	B	C	D	E	F	G	H	I	J	K	L	M	N		14H/14E
91	FL	Daytona Beach-VOTRAN	Bus	34	229	111	340	30313	1			1			10.000
92	FL	Daytona Beach-VOTRAN	Bus	34	184	103	287	29030	1	0	0	4	0	4	8.441
93	FL	Daytona Beach-VOTRAN	Bus	34	186	88	274	30419	1.000	0.000	0.000	1.000	0.000	1.000	8.059
94	FL	Daytona Beach-VOTRAN	Bus	28	168	101	269	34392	1	0	0	1	0	1	9.607
95	FL	Daytona Beach-VOTRAN	Bus	36	323	94	417	37930	1.000	0.000	0.000	1.000	0.000	1.000	11.58
91	FL	Ft. Lauderdale-Bct	Bus	155	3121	476	3597	186857	2			2			23.206
92	FL	Ft. Lauderdale-Bct	Bus	155	2079	303	2382	253629	2			1.8		1.8	15.368
93	FL	Ft. Lauderdale-Bct	Bus	166	1570	121	1691	143107	2.000	0.000	0.000	2.000	0.000	2.000	10.187
94	FL	Ft. Lauderdale-Bct	Bus	167	1632	86	1718	1718	2	0	0	2	0	2	10.287
95	FL	Ft. Lauderdale-Bct	Bus	155	1901	100	2001	239200	2.000	0.000	0.000	2.000	0.000	2.000	12.91
91	FL	Miami-MDTA	Bus	458	3549	1958	5507	301600	1	2		3			12.024
92	FL	Miami-MDTA	Bus	505	5667	3450	9117	306840	1	2	0	1	0	1	18.053
93	FL	Miami-MDTA	Bus	501	8551	5368	13919	342716	1.000	2.000	0.000	3.000	0.000	3.000	27.782
94	FL	Miami-MDTA	Bus	496	9300	4896	14196	365561	0	3	0	3	0	3	28.621
95	FL	Miami-MDTA	Bus	487	10334	5084	15418	376737	0.000	3.000	0.000	3.000	0.000	3.000	31.66
91	FL	Orlando-LYNX	Bus	88	250	80	330	66840	1			1			3.750
92	FL	Orlando-LYNX	Bus	108	134	364	498	68112	1			2	0	2	4.611
93	FL	Orlando-LYNX	Bus	113	360	635	995	70400	1.000	0.000	0.000	1.000	0.000	1.000	8.805
94	FL	Orlando-LYNX	Bus	136	1034	264	1298	84610	2	0	0	2	0	2	9.544
95	FL	Orlando-LYNX	Bus	144	928	439	1367	96610	1.000	0.000	0.000	1.000	0.000	1.000	9.49
91	FL	St. Petersburg-PSTA	Bus	105	97	1326	1423	66520	1.8			1.8			13.552
92	FL	St. Petersburg-PSTA	Bus	104	652	1219	1871	76309		1.8		0.2		0.2	17.990
93	FL	St. Petersburg-PSTA	Bus	101	1777	801	2578	110251	1.800	0.000	0.000	1.800	0.000	1.800	25.525
94	FL	St. Petersburg-PSTA	Bus	102	1322	285	1607	119996	1.8	0	0	1.8	0	1.8	15.755
95	FL	St. Petersburg-PSTA	Bus	103	665	220	885	105450	1.800	0.000	0.000	1.800	0.000	1.800	8.59

* National Transit database

Transit Accident Data for Selected Florida Transit Agencies [NTD* Table 18 in 1991, Table 20 in 1992 thru 1995]

				Total Vehicles Operated in Max. Service	<---Number of Accidents--->			<---Number of Fatalities--->			<----Number of Injuries---->			
Year	State	Transit Agency	Mode		Collision	Non-Colli-sion	Station	Patron	Non-Patron	Total	Patron	Non-Patron	Total	20FG/20E
A	B	C	D	E	F	G	H	I	J	K	L	M	N	O
91	FL	Daytona Beach-VOTRAN	MB	34	5	50	0	0	0	0	51	0	51	1.618
92	FL	Daytona Beach-VOTRAN	MB	34	13	9	2	0	0	0	15	9	24	0.647
93	FL	Daytona Beach-VOTRAN	MB	34	1	3	0	0	0	0	0	3	3	0.118
94	FL	Daytona Beach-VOTRAN	Bus	28	10	0	0	0	0	0	3	2	5	0.357
95	FL	Daytona Beach-VOTRAN	Bus	36	4	0	0	0	0	3	0	0	33345	0.111
91	FL	Ft. Lauderdale-Bct	MB	155	462	293	0	0	0	0	101	171	272	4.871
92	FL	Ft. Lauderdale-Bct	MB	155	454	241	0	0	1	1	308	0	308	4.484
93	FL	Ft. Lauderdale-Bct	MB	166	361	328	0	0	1	1	358	20	378	4.151
94	FL	Ft. Lauderdale-Bct	Bus	167	418	185	0	0	2	2	200	20	220	3.611
95	FL	Ft. Lauderdale-Bct •	Bus	155	182	0	0	0	0	29	0	15	96029	1.174
91	FL	Miami-MDTA	MB	458	815	187	234	0	3	3	226	177	403	2.188
92	FL	Miami-MDTA	MB	505	879	192	69	0	3	3	258	311	569	2.121
93	FL	Miami-MDTA	MB	501	1,086	211	75	0	4	4	330	364	694	2.589
94	FL	Miami-MDTA	Bus	496	1,032	204	95	0	2	2	312	306	618	2.492
95	FL	Miami-MDTA	Bus	487	314	0	1	0	3	93	0	36	219526	0.645
91	FL	Orlando-LYNX	MB	88	11	21	1	0	0	0	42	0	42	0.364
92	FL	Orlando-LYNX	MB	108	181	10	5	1	0	1	53	0	53	1.769
93	FL	Orlando-LYNX	MB	113	171	30	0	0	0	0	65	0	65	1.779
94	FL	Orlando-LYNX	Bus	136	8	32	3	0	0	0	62	0	62	0.294
95	FL	Orlando-LYNX	Bus	144	15	0	0	0	0	38	0	16	154730	0.104
91	FL	St. Petersburg-PSTA	MB	105	59	41	3	0	0	0	78	0	78	0.952
92	FL	St. Petersburg-PSTA	MB	104	98	37	2	0	1	1	66	8	74	1.298
93	FL	St. Petersburg-PSTA	MB	101	139	0	0	1	0	1	23	0	23	1.376
94	FL	St. Petersburg-PSTA	Bus	102	110	32	2	0	0	0	90	1	91	1.392
95	FL	St. Petersburg-PSTA	Bus	103	57	0	0	0	0	12	0	1	54050	0.553

* National Transit Database

Transit Operations Statistics (Service Supplied and Consumed) for Selected Florida Transit Agencies [NTD* Table 19 in 1991, Table 21 1992-94, Table 26 in 1995]

				<---------- Transit Service Supplied ---------->								<--Transit Service--> Consumed			
Year	State	ansit Syst	Mode	Vehicles Operated in Max. Service	Vehicles Available in Max. Service	Annual Sched. Vehicle Revenue Miles (000)	Annual Vehicles Miles (000)	Annual Actual Vehicle Revenue Miles (000)	Annual Vehicle Revenue Capacity Miles (000)	Annual Vehicle Hours (000)	Annual Vehicle Revenue Hours (000)	Annual Unlinked Pass. Trips (000)	Annual Pass. Miles (000)		
A	B	C	D	E	F	G	H	I	J	K	L	M	21K/19MN	21K/19O	21K/19P
91	FL	Daytona B	Bus	34	37	1405	1614	1430	77587	104	100	3002	5413	7114	1101
92	FL	Daytona B	Bus	34	37	1460	1552	1464	110	108	3025	10589	5770	19618	1154
93	FL	Daytona B	Bus	34	37	1489	1575	1491	114	109	3247	10464	6421	21833	1187
94	FL	Daytona B	Bus	28	37	1588	1687	1565	119	110	3173	10217	8469	1573	1079
95	FL	Daytona B	Bus	36	53	2040	2224	2045	140	129	3522	11341	6500	9193	1102
91	FL	Ft. Lauder	Bus	155	188	8807	9500	8775	377319	718	686	19108	4509	5266	997
92	FL	Ft. Lauder	Bus	155	189	8802	9424	8728	656	630	19972	96256	4733	21632	1124
93	FL	Ft. Lauder	Bus	166	189	8806	9511	8759	661	634	21319	95630	4198	10744	975
94	FL	Ft. Lauder	Bus	167	196	9112	9876	9087	692	662	22271	102134	4218	1122	980
95	FL	Ft. Lauder	Bus	155	195	9231	9966	9193	695	667	23378	109012	4903	7248	1007
91	FL	Miami-MD	Bus	458	547	20203	22778	20024	1097587	1734	1560	55131	4165	5540	939
92	FL	Miami-MD	Bus	505	574	21515	23363	20435	1856	1613	55125	233416	4444	9514	963
93	FL	Miami-MD	Bus	501	612	22567	25038	22037	1946	1785	63807	246261	4799	11593	1023
94	FL	Miami-MD	Bus	496	604	22990	25429	22424	1970	1819	63226	255855	4524	1212	988
95	FL	Miami-MD	Bus	487	626	23068	25580	22418	1943	1797	61582	244192	4404	12060	991
91	FL	Orlando-L	Bus	88	102	4836	5093	4832	217864	371	350	9642	7204	8753	1242
92	FL	Orlando-L	Bus	108	122	5696	6059	5694	445	419	9726	47866	7117	13523	1269
93	FL	Orlando-L	Bus	113	130	5740	6878	5767	498	473	10750	52747	6954	9651	1105
94	FL	Orlando-L	Bus	136	163	7073	7660	7110	587	550	11937	63794	6323	775	1062
95	FL	Orlando-L	Bus	144	177	8461	9203	8514	644	601	13452	85298	6461	10729	1100
91	FL	St. Peters	Bus	105	132	5699	6190	5717	331586	425	401	10805	6600	5698	1098
92	FL	St. Peters	Bus	104	149	5756	6257	5775	439	416	9414	50856	6464	10984	1063
93	FL	St. Peters	Bus	101	152	6431	7008	6480	476	444	8803	42918	6350	9260	1100
94	FL	St. Peters	Bus	102	183	6217	6733	6206	455	432	8084	40648	6267	920	1076
95	FL	St. Peters	Bus	103	145	6396	6928	6396	465	443	8042	39826	7634	11967	1272

* National Transit Database

Transit Operations Statistics (Service Supplied and Consumed) for Selected Florida Transit Agencies [NTD* Table 19 in 1991, Table 21 1992-94, Table 26 in 1995]

	<---------- Number of Operating Employee Equivalents ---------->											
	<--------- Transportation --->			<---------- Maintenance ---------->					<-General Admin.->			
	Admin.	Rev. Veh. Oper.	Support	Veh. Maint. Admin.	Rev Veh. Inspect. & Maint.	Rev. Veh. Maint. Support	Non-Vehicle Maint. Admin.	Non-Vehicle Maint. Support	Mktg. & Planning	Support	Total	
	7.2	60	0.3	2.2	14.5	1.2	0	0.5	0.2	4.4	90.5	
17.9	0.8	5.5	93.5									
70.0	16.0	1.0	5.0									
12	1	7	102									
16.8	3.0	14.0	116.8									
	32.9	426.8	6.2	27.4	89.8	26.7	0	8.3	31.8	38.2	688.1	
120.4	12.6	29.1	559.9									
440.0	130.0	21.0	59.0									
136	21	59	676									
115.0	21.0	92.0	662.0									
	24.5	1002.6	86.8	77.3	145	111.2	6.4	34.5	36.6	136.7	1661.6	
319.4	43.5	169.5	1673.9									
1,220.0	330.0	42.0	154.0									
358	44	150	1841									
364.0	44.0	149.0	1813.0									
	4.3	186.8	11.7	5.2	32.1	5.8	0	5.5	11.9	18.6	281.9	
48.5	10.4	31	330.3									
311.0	58.5	9.5	49.0									
75	12	71	518									
82.0	11.0	56.0	546.0									
	21.5	238.9	6.9	11.2	32	10	0.8	6.7	14.1	22.7	364.8	
55.7	8.7	37.9	391.5									
286.0	59.0	11.0	48.0									
60	9	47	402									
51.0	7.0	37.0	348.0									

Performance Indicators (Based on Veh Operated, Veh Revenue Miles and Hours for Selected Florida Transit Agencies [NTD* Table 21 in 1991, Table 23 in 1992-1994, Table 28 in 1995]

				<Max. No. of Veh.>			<--Annual Actual Vehicle Revenue Miles-->				<--Annual Vehicle--> Revenue Hours				
Year	State	Transit Agency	Mode	Vehicles Operated in Max. Service	Operated in Avg. PM Peak Period	Operated in Avg. Base Period	Vehicles Operated in Max. Service Per Direct-tional Mile	Per Vehicles Operated in Max. Service	Per Oper-ator	Per Vehicle Revenue Hour (MPH)	Per Direc-tional Mile	Per Vehicle Operated in Avg. Weekday Max. Service	Per Opera-tor		
A	B	C	D	E	F	G	H	I	J	K	L	M	N	23F/23E	23G/23E
91	FL	Daytona Beach-VOTRAN	Bus	34	0	0	0.100	42072	23840.7	14.4	5566	2931	1660.7	1.000	1.000
92	FL	Daytona Beach-VOTRAN	Bus	34	0	0	0.100	43050	23482.9	13.6	5695	3172	1730.4	1.000	1.000
93	FL	Daytona Beach-VOTRAN	Bus	34	0	0	0.123	43857	7.5	13.7	5414	3211	0.546	1.000	1.000
94	FL	Daytona Beach-VOTRAN	Bus	28	0	0	0.102	55880	7.1	14.2	5681	3932	0.5	1.000	1.000
95	FL	Daytona Beach-VOTRAN	Bus	36	0	0	0.092	56793	8.075	15.9	5205	3575	0.508	1.000	1.000
91	FL	Ft. Lauderdale-Bct	Bus	155	144	155	0.200	56612	20559.7	12.8	14146	4427	1607.7	0.929	1.000
92	FL	Ft. Lauderdale-Bct	Bus	155	145	155	0.200	56311	25689.4	13.9	14071	4062	1852.9	0.935	1.000
93	FL	Ft. Lauderdale-Bct	Bus	166	148	166	0.265	52768	6.5	13.8	14008	3819	0.469	0.892	1.000
94	FL	Ft. Lauderdale-Bct	Bus	167	148	167	0.267	54414	6.5	13.7	14544	3965	0.5	0.886	1.000
95	FL	Ft. Lauderdale-Bct	Bus	155	155	148	0.625	59312	6.677	13.8	37070	4302	0.484	1.000	0.955
91	FL	Miami-MDTA	Bus	458	423	309	0.300	43720	19971.7	12.8	14587	3405	1555.4	0.924	0.675
92	FL	Miami-MDTA	Bus	505	474	320	0.300	40466	20074.9	12.7	14159	3194	1584.2	0.939	0.634
93	FL	Miami-MDTA	Bus	501	471	332	0.341	43987	5.7	12.3	14990	3564	0.464	0.940	0.663
94	FL	Miami-MDTA	Bus	496	491	339	0.331	45209	5.7	12.3	14942	3667	0.5	0.990	0.683
95	FL	Miami-MDTA	Bus	487	487	335	42.719	46033	5.689	12.5	1966484	3690	0.456	1.000	0.688
91	FL	Orlando-LYNX	Bus	88	82	74	0.200	54904	25864.7	13.8	8491	3978	1874.2	0.932	0.841
92	FL	Orlando-LYNX	Bus	108	99	95	0.200	52721	26106.2	13.6	9920	3882	1922.2	0.917	0.880
93	FL	Orlando-LYNX	Bus	113	110	103	0.186	51034	7.4	12.2	9469	4185	0.603	0.973	0.912
94	FL	Orlando-LYNX	Bus	136	110	133	0.208	52281	7.8	12.9	10888	4045	0.6	0.809	0.978
95	FL	Orlando-LYNX	Bus	144	144	133	0.211	59127	8.009	14.2	12503	4173	0.565	1.000	0.924
91	FL	St. Petersburg-PSTA	Bus	105	101	105	0.100	54446	23930	14.3	3357	3815	1676.8	0.962	1.000
92	FL	St. Petersburg-PSTA	Bus	104	104	103	0.100	55531	22161.2	13.9	3391	4003	1597.5	1.000	0.990
93	FL	St. Petersburg-PSTA	Bus	101	97	101	0.059	64155	8.0	14.6	3805	4401	0.551	0.960	1.000
94	FL	St. Petersburg-PSTA	Bus	102	100	102	0.060	60843	7.5	14.4	3644	4240	0.5	0.980	1.000
95	FL	St. Petersburg-PSTA	Bus	103	100	103	0.061	62095	8.834	14.4	3760	4299	0.612	0.971	1.000

* National Transit Database

Performance Indicators Data (Operating Expense) for Selected Florida Transit Agencies [NTD* Table 22 in 1991, Table 24 in 1992-94, Table 29 in 1995]

					Total Operating Expenses					ting Expenses by Function			tion	
				DO/ VOMS*,	Per Vehicle, Operated in, Max Service,	er Vehicl evenue Hr (VRH)	er Unlinke Passenge Trip (UPT)	Per Passenger Mile	Per mployee ork Hour	Veh. Oper er Vehicl evenue M	eh. Maint er Vehicl evenue M	n-Veh Mai er Vehicl evenue M	en. Admin. er Vehicle evenue Mi.	
Year	State	Transit Agency	Mode											
A	B	C	D	E	F	G	H	I	J	K	L	M	N	
91	FL	Daytona Beach-VOTRAN	Bus	34	109494	37.4	1.20	0.400	41135.9	1.300	0.800	0.000	0.500	
92	FL	Daytona Beach-VOTRAN	Bus	34	111258	35.1	1.30	0.400	40477.7	1.300	0.700	0.000	0.500	
93	FL	Daytona Beach-VOTRAN	Bus	34	116351	36.2	1.22	0.378	19.8	1.245	0.752	0.049	0.607	
94	FL	Daytona Beach-VOTRAN	Bus	29	9285	19.1	8.20	1.100	10.7	0.700	0.300	0.000	0.300	
95	FL	Daytona Beach-VOTRAN	Bus	36	145345	40.7	1.49	0.461	20.7	1.524	0.333	0.030	0.672	
91	FL	Ft. Lauderdale-Bct	Bus	155	232195	52.5	1.90	0.500	52303.7	2.400	0.900	0.100	0.700	
92	FL	Ft. Lauderdale-Bct	Bus	155	233244	57.4	1.80	0.400	64572.9	2.800	0.900	0.100	0.300	
93	FL	Ft. Lauderdale-Bct	Bus	166	222247	58.2	1.73	0.386	27.3	2.820	0.928	0.094	0.370	
94	FL	Ft. Lauderdale-Bct	Bus	167	232248	58.6	1.70	0.400	27.6	2.900	0.900	0.100	0.400	
95	FL	Ft. Lauderdale-Bct	Bus	155	264272	61.4	1.75	0.376	29.7	2.932	0.970	0.117	0.436	
91	FL	Miami-MDTA	Bus	458	222390	65.3	1.80	0.500	61229.0	3.100	1.100	0.100	0.700	
92	FL	Miami-MDTA	Bus	505	207051	64.8	1.90	0.400	62067.9	3.200	1.100	0.200	0.600	
93	FL	Miami-MDTA	Bus	501	226291	63.5	1.78	0.460	29.5	3.232	1.064	0.161	0.687	
94	FL	Miami-MDTA	Bus	496	240636	65.6	1.90	0.500	30.6	3.400	1.200	0.200	0.600	
95	FL	Miami-MDTA	Bus	487	245113	66.4	1.94	0.489	30.3	3.408	1.132	0.188	0.596	
91	FL	Orlando-LYNX	Bus	88	153492	38.6	1.40	0.400	47915.2	1.700	0.600	0.100	0.500	
92	FL	Orlando-LYNX	Bus	108	153946	39.7	1.70	0.300	50333.5	1.600	0.500	0.100	0.700	
93	FL	Orlando-LYNX	Bus	113	179857	43.0	1.89	0.385	25.9	1.960	0.612	0.089	0.863	
94	FL	Orlando-LYNX	Bus	136	185986	46.0	2.10	0.400	27.9	2.000	0.600	0.100	0.900	
95	FL	Orlando-LYNX	Bus	144	212686	51.0	2.28	0.359	28.8	1.942	0.606	0.089	0.960	
91	FL	St. Petersburg-PSTA	Bus	105	136525	35.8	1.30	0.200	39295.8	2.000	0.500	0.000	0.000	
92	FL	St. Petersburg-PSTA	Bus	104	194706	48.6	2.20	0.400	51723.6	2.100	0.600	0.100	0.700	
93	FL	St. Petersburg-PSTA	Bus	101	225548	51.3	2.59	0.531	28.3	2.154	0.640	0.107	0.614	
94	FL	St. Petersburg-PSTA	Bus	102	224015	52.8	2.80	0.600	27.7	2.200	0.600	0.100	0.700	
95	FL	St. Petersburg-PSTA	Bus	103	223205	51.9	2.86	0.577	31.8	2.184	0.596	0.097	0.717	

* National Transit Database

Performance Indicators (Passenger Trips and, Miles and Veh Miles) Data for Selected Florida Transit Agencies [NTD* Table 23 in 1991, Table 25 in 1992-94, Table 30 in 1995]

					Annual Passenge			Annual Unlinked Passenger				
Year	State	Transit Agency	Mode,	DO/ VOMS*,	Per Directi Mile in Thousan (DRM)	Per Vehic Operated Max. Servi in Thousa	Per Vehic Revenue Hour (VRH)	Per Directi Mile in Thousan (DRM)	Per Actua Vehicle Rev. Mile (VRM)	Per Employe Work Hour	Per Vehic Revenue Hour (VRH)	Annual Vehicle, Miles Per Dollar Vehicle, Maintenance Expense
A	B	C	D	E	F	G	H	I	J	K	L	M
91	FL	Daytona Beach-VOTRAN	Bus	34	40878.6	309.0	105.4	11679.6	2.100	33.2	30.1	1.44
92	FL	Daytona Beach-VOTRAN	Bus	34	41.2	311.4	98.2	11.8	2.100	32.4	28.0	1.47
93	FL	Daytona Beach-VOTRAN	Bus	34	38.0	307.8	95.9	11.8	2.178	16.2	29.7	1.40
94	FL	Daytona Beach-VOTRAN	Bus	28	37.0	365.0	93.0	12.0	2.000	14.0	29.0	1.00
95	FL	Daytona Beach-VOTRAN	Bus	36	28.9	315.0	88.1	9.0	1.723	13.9	27.4	3.27
91	FL	Ft. Lauderdale-Bct	Bus	155	128672.4	514.9	116.3	30804.8	2.200	27.8	27.8	1.21
92	FL	Ft. Lauderdale-Bct	Bus	155	155.2	621.0	152.9	32.2	2.300	35.7	31.7	1.15
93	FL	Ft. Lauderdale-Bct	Bus	166	152.9	576.1	150.9	34.1	2.434	15.8	33.6	1.17
95	FL	Ft. Lauderdale-Bct	Bus	155	439.6	703.3	163.5	94.3	2.543	17.0	35.1	1.12
91	FL	Miami-MDTA	Bus	458	163073.9	488.8	143.5	40162.7	2.800	33.1	35.4	1.01
92	FL	Miami-MDTA	Bus	505	161.7	462.2	144.7	38.2	2.700	32.7	34.2	1.07
93	FL	Miami-MDTA	Bus	501	167.5	491.5	137.9	43.4	2.895	16.6	35.7	1.07
94	FL	Miami-MDTA	Bus	496	170.0	516.0	141.0	42.0	3.000	16.0	35.0	1.00
95	FL	Miami-MDTA	Bus	487	21420.4	501.4	135.9	5401.9	2.747	15.6	34.3	1.01
91	FL	Orlando-LYNX	Bus	88	65524.3	423.7	106.5	16944.9	2.000	34.2	27.5	1.82
92	FL	Orlando-LYNX	Bus	108	83.4	443.2	114.2	16.9	1.700	29.4	23.2	2.35
93	FL	Orlando-LYNX	Bus	113	86.6	466.8	111.5	17.7	1.864	13.7	22.7	1.95
94	FL	Orlando-LYNX	Bus	136	98.0	469.0	116.0	18.0	2.000	13.0	22.0	2.00
95	FL	Orlando-LYNX	Bus	144	125.3	592.3	142.0	19.8	1.580	12.7	22.4	1.78
91	FL	St. Petersburg-PSTA	Bus	105	33896.6	549.8	144.1	6344.8	1.900	29.6	27.0	1.74
92	FL	St. Petersburg-PSTA	Bus	104	29.9	489.0	122.2	5.5	1.600	24.0	22.6	1.68
93	FL	St. Petersburg-PSTA	Bus	101	25.2	424.9	96.6	5.2	1.359	10.9	19.8	1.69
94	FL	St. Petersburg-PSTA	Bus	102	24.0	399.0	94.0	5.0	1.000	10.0	19.0	2.00
95	FL	St. Petersburg-PSTA	Bus	103	23.4	386.7	89.9	4.7	1.257	11.1	18.2	1.82

* National Transit database

Performance Indicators Data (Service -Hours) for Selected Florida Transit Agencies [NTD* Table 24 in 1991, Table 26 in 1992-94, Table 31 in 1995]

Year	State	Transit Agency	Mode	DO/ VOMS*	Vehicle Operati Hours Per Vehicle Operated in Maximum Ser	Vehicle Maintenance Hours Per Veh. Operated Maximum Ser	Non-Vehicle Maintenanc Hours Per Veh. Operate Maximum Se	Administratio Hours Per Vehicle Operated in Maximum Se	Capital Hours Per Vehicle Operated in Maximum Se	Total System Hours Per Vehicles Operated in Maximum Service
A	B	C	D	E	F	G	H	I	J	K
91	FL	Daytona Beach-VOTRAN	Bus	34	1.99	0.54	0.14	2.66		
92	FL	Daytona Beach-VOTRAN	Bus	34	2.04	0.55	0.16	2.75		
93	FL	Daytona Beach-VOTRAN	Bus	34	2.06	0.47	0.03	0.15	0.00	2.71
94	FL	Daytona Beach-VOTRAN	Bus	28	5873.79	1454.79	129.71	466.32	0.00	7924.61
95	FL	Daytona Beach-VOTRAN	Bus	36	4911.06	1053.61	178.78	889.36	0.00	7032.81
91	FL	Ft. Lauderdale-Bct	Bus	155	3.01	0.98	0.45	4.44		
92	FL	Ft. Lauderdale-Bct	Bus	155	2.57	0.86	0.19	3.61		
93	FL	Ft. Lauderdale-Bct	Bus	166	2.65	0.78	0.13	0.36	0.00	3.92
94	FL	Ft. Lauderdale-Bct	Bus	167	5729.34	1693.89	243.14	734.85	0.00	8401.22
95	FL	Ft. Lauderdale-Bct	Bus	155	5824.00	1543.23	281.81	1234.58	0.00	8883.61
91	FL	Miami-MDTA	Bus	458	2.43	0.82	0.38	3.63		
92	FL	Miami-MDTA	Bus	505	2.26	0.72	0.34	3.34		
93	FL	Miami-MDTA	Bus	501	2.44	0.66	0.08	0.31	0.01	3.50
94	FL	Miami-MDTA	Bus	496	5467.99	1518.50	187.35	635.73	54.72	7864.29
95	FL	Miami-MDTA	Bus	487	5514.79	1599.91	192.85	653.40	131.15	8092.09
91	FL	Orlando-LYNX	Bus	88	2.30	0.55	0.35	3.20		
92	FL	Orlando-LYNX	Bus	108	2.23	0.55	0.29	3.06		
93	FL	Orlando-LYNX	Bus	113	2.75	0.52	0.08	0.43	0.00	3.79
94	FL	Orlando-LYNX	Bus	136	4748.39	1008.16	153.26	761.80	0.00	6671.61
95	FL	Orlando-LYNX	Bus	144	5340.10	1174.46	171.07	697.29	0.00	7382.92
91	FL	St. Petersburg-PSTA	Bus	105	2.55	0.58	0.35	3.47		
92	FL	St. Petersburg-PSTA	Bus	104	2.78	0.62	0.36	3.76		
93	FL	St. Petersburg-PSTA	Bus	101	2.83	0.58	0.11	0.48	0.00	4.00
94	FL	St. Petersburg-PSTA	Bus	102	5870.22	1176.43	167.64	862.83	0.00	8077.12
95	FL	St. Petersburg-PSTA	Bus	103	5108.52	1023.79	145.88	750.87	0.00	7029.07

* National Transit Database