Joint Pub 4-01.7

# Joint Tactics, Techniques, and Procedures for Use of Intermodal Containers in Joint Operations

DISTRIBUTION STATEMENT A
Approved for public release;
Distribution Unlimited

7 January 1997

19970715 188

# PREFACE

## 1. Scope

This publication describes joint tactics, techniques, and procedures for effective and efficient use of intermodal containers and systems to deploy, sustain, and redeploy forces. It covers all types of International Organization for Standardization (ISO) intermodal containers and flatracks for the surface transportation system and 463L pallet and/or container systems for the air transportation system. This publication describes planning and operational procedures for employing intermodal principles and intermodal containers in operations from unit installation and/or depot through air and/or seaports of embarkation and/or debarkation into the theater of operations and return. Use of intermodal containers and systems is applicable to all types of cargo (i.e., all classes of supply).

## 2. Purpose

This publication has been prepared under the direction of the Chairman of the Joint Chiefs of Staff. It sets forth doctrine and selected joint tactics, techniques, and procedures (JTTP) to govern the joint activities and performance of the Armed Forces of the United States in joint operations and provides the doctrinal basis for US military involvement in multinational and interagency operations. It provides military guidance for the exercise of authority by combatant commanders and other joint force commanders and prescribes doctrine and selected tactics, techniques, and procedures for joint operations and training. It provides military guidance for use by the Armed Forces in preparing their appropriate plans. It is not the intent of this publication to restrict the authority of the joint force commander (JFC) from organizing the force and executing the mission in a manner the JFC deems most appropriate to ensure unity of effort in the accomplishment of the overall mission.

## 3. Application

a. Doctrine and selected joint tactics, techniques, and procedures and guidance established in this publication apply to the commanders of combatant commands, subunified commands, joint task forces, and subordinate components of these commands. These principles and guidance also may apply when significant forces of one Service are attached to forces of another Service or when significant forces of one Service support forces of another Service.

b. The guidance in this publication is authoritative; as such, this doctrine (or JTTP) will be followed except when, in the judgment of the commander, exceptional circumstances dictate otherwise. If conflicts arise between the contents of this publication and the contents of Service publications, this publication will take precedence for the activities of joint forces unless the Chairman of the Joint Chiefs of Staff, normally in coordination with the other members of the Joint Chiefs of Staff, has provided more current and specific guidance. Commanders of forces operating as part of a multinational (alliance or coalition) military

DISTRIBUTION STATEMENT A
Approved for public release
Distribution Unlimited

DTIC QUALITY INSPECTED

command should follow multinational doctrine and procedures ratified by the United States. For doctrine and procedures not ratified by the United States, commanders should evaluate and follow the multinational command's doctrine and procedures, where applicable.

For the Chairman of the Joint Chiefs of Staff:

DENNIS C. BLAIR
Vice Admiral, US Navy
Director, Joint Staff

# TABLE OF CONTENTS

PAGE

EXECUTIVE SUMMARY ..... ix

CHAPTER I
INTRODUCTION TO INTERMODALISM

- Background ..... I-1
- Purpose ..... I-1
- Fundamental Principles of Intermodalism and Intermodal Container Use ..... I-1

CHAPTER II
INTERMODAL EQUIPMENT

- Purpose ..... II-1

SECTION A. STANDARDS AND SPECIFICATIONS ..... II-1

- International Standardization ..... II-1
- Federal Standards for Containers ..... II-1
- Military Performance Specifications (MILSPECs) for Containers ..... II-3
- Commercial International Intermodal Practices ..... II-4
- Domestic Regional Intermodal Systems ..... II-4

SECTION B. TYPES AND AVAILABILITIES OF CONTAINERS AND TYPES OF CONTAINER HANDLING EQUIPMENT ..... II-4

- Intermodal Containers — General ..... II-4
- Commercial Container Sources ..... II-5
- Container Dimensions ..... II-5
- Status and Trends in Container Size ..... II-5
- Types of Intermodal Containers ..... II-7
- Types of Container Handling Equipment ..... II-21

SECTION C. SPECIAL PURPOSE/TACTICAL SHELTERS ..... II-29

- Special Purpose Mobile Shelters and Facilities ..... II-29
- Naval Mobile Facility Program ..... II-29
- Mobile Facility Program Equipment ..... II-29
- Purpose ..... II-29
- Scope ..... II-29
- Transportation ..... II-30
- Mobile Facility Data (USN/USMC) ..... II-30
- MF Ancillary Equipment ..... II-33
- Transportation of Mobile Facilities ..... II-33

- Line Haul and Strategic Transportation ..... II-38
- Mobility Requirements ..... II-38

SECTION D. PALLETS AND THE AIRLIFT SYSTEM ..... II-40

- General ..... II-40
- 463L System ..... II-41
- Airlift System and ISO Containers ..... II-41
- ISU-Series Containers ..... II-42
- 463L Pallet ..... II-42
- MHE/CHE Requirements ..... II-43

CHAPTER III
INTERMODAL CONTAINER TRANSPORT

SECTION A. LAND TRANSPORTATION ..... III-1

- Rail - Car Types ..... III-1
- Rail - Trends ..... III-1
- Foreign Railroads ..... III-2
- Highway Transportation ..... III-2
- DOD Assets ..... III-2

SECTION B. SEA TRANSPORTATION ..... III-4

- General ..... III-4
- Ship Types ..... III-6
- Shipping Service ..... III-7
- Ship Charters ..... III-8

SECTION C. AIR TRANSPORTATION ..... III-10

- General ..... III-10
- Container Restraint Criteria ..... III-10
- Planning Data for Carrying ISO Container/Pallet Trains on Military and Commercial Airlift Assets ..... III-10
- Assumptions ..... III-10
- ISO 40-foot Containers ..... III-12

CHAPTER IV
MANAGEMENT AND CONTROL OF CONTAINERS

SECTION A. ORGANIZATIONS ..... IV-1

- Container Management in DOD ..... IV-1
- Joint Staff and Geographic Combatant Commands ..... IV-1
- United States Transportation Command ..... IV-3

SECTION B. PROCUREMENT AND LEASING ..... IV-5

- Containers and Intermodal Services ..... IV-5
- Service-Owned Equipment (Containers, Pallets and Other Related Equipment) ..... IV-6
- Contingency Contracting ..... IV-7

SECTION C. MAINTENANCE, REPAIR, AND INSPECTION ..... IV-8

- General ..... IV-8
- Responsibilities ..... IV-9
- Funding ..... IV-9
- Maintenance ..... IV-10
- Maintenance Expenditure Limits (MELs) ..... IV-10
- Inventories ..... IV-10
- Containers Lost, Damaged or Destroyed ..... IV-10

SECTION D. TRANSPORTATION POLICIES AND PROCEDURES SUPPORTING DOD ITV CAPABILITY ..... IV-11

- DOD Transportation Policy ..... IV-11
- Transportation Automated Information Systems (TAIS) ..... IV-11
- USTRANSCOM's Global Transportation Network (GTN) ..... IV-11
- Movement Reporting ..... IV-11

CHAPTER V
PLANNING CONTAINER OPERATIONS

SECTION A. DELIBERATE PLANNING ..... V-1

- Planning ..... V-1

SECTION B. FORCE STRUCTURE FOR CONTAINER HANDLING ..... V-6

- Force Structure ..... V-6

SECTION C. SIZING REQUIREMENTS FOR 463L PALLETS AND 20-FOOT EQUIVALENT UNITS ..... V-9

- Sizing Requirements ..... V-9

CHAPTER VI
CONTAINER OPERATIONS

SECTION A. UNIT DEPLOYMENT OPERATIONS ..... VI-1

- Introduction ..... VI-1
- Unit Container Operations ..... VI-1
- Execution Planning for Deployment ..... VI-2

Table of Contents


- Container Stuffing Operations ..... VI-3
- Container and Cargo Documentation ..... VI-4
- Container Booking and Movement to the Seaport ..... VI-5
- Concept of Operations for Containerizing Unit Impedimenta ..... VI-6

SECTION B. RESUPPLY AND SUSTAINMENT OPERATIONS ..... VI-8

- General ..... VI-8
- Container Consolidation Locations and Capabilities ..... VI-8
- Forecasting Container Requirements ..... VI-9
- Procedures ..... VI-9
- Cargo Excluded from DLA Consolidation and Containerization Activities ..... VI-12

SECTION C. AMMUNITION AND OTHER HAZARDOUS MATERIALS ..... VI-12

- General ..... VI-12
- Objectives ..... VI-12
- Planning and Execution ..... VI-12
- Handling of Ammunition ..... VI-14

SECTION D. THEATER RECEPTION, STAGING, ONWARD MOVEMENT AND INTEGRATION, AND RETROGRADE OF CONTAINERS ..... VI-15

- General ..... VI-15
- Seaport of Debarkation ..... VI-16
- Planning Sequence for Reception, Staging, Onward Movement, and Integration ..... VI-18
- Seaport Clearance and Onward Movement Operations ..... VI-18
- Container Distribution Within A Theater Of Operations ..... VI-21
- Central Receiving and Shipping Point ..... VI-22
- Container Handling Capability ..... VI-22
- Retrograde of Containers ..... VI-23
- Theater Container Management Objectives ..... VI-24
- Daily Container Management Activities ..... VI-24

SECTION E. AMPHIBIOUS AND LOGISTICS OVER-THE-SHORE OPERATIONS ..... VI-24

- Purpose ..... VI-24
- Usage ..... VI-24
- Elements ..... VI-24
- Throughput ..... VI-26
- Cargo Off-load and Transfer System ..... VI-26
- Movement ..... VI-28
- Container Handling Considerations ..... VI-28
- Planning Factors ..... VI-28
- Beach Operations ..... VI-28
- Container Control Site ..... VI-28

APPENDIX

A Service Schools ..... A-1
B References ..... B-1
C Administrative Instructions ..... C-1

GLOSSARY

Part I Abbreviations and Acronyms ..... GL-1
Part II Terms and Definitions ..... GL-6

FIGURE

I-1 Effective Intermodal Movement ..... I-3
II-1 ISO Documents for Freight Containers ..... II-2
II-2 Types of Containers ..... II-3
II-3 ISO Standard Characteristics ..... II-5
II-4 Trends in US-Owned Commercial Container Fleet ..... II-6
II-5a End-Opening Container ..... II-8
II-5b Double End-Opening Container ..... II-9
II-6 Refrigerated Container ..... II-10
II-7 Side-Opening Container ..... II-12
II-8 Open Top Container ..... II-13
II-9 Tank Container ..... II-14
II-10 Half-Height Container ..... II-15
II-11 Military QUADCON ..... II-16
II-12 Military TRICON ..... II-18
II-13 Internal Airlift or Helicopter Slingable Container Units (ISU) ..... II-19
II-14 Flatracks ..... II-20
II-15 Load and Roll Pallet Assembly ..... II-21
II-16 Rough Terrain Container Crane ..... II-23
II-17 Spreader Bars ..... II-24
II-18 Rough Terrain Container Handler and Top Handler ..... II-25
II-19 140-Ton, Truck-Mounted Container-Handling Crane ..... II-27
II-20 20-/40-Foot Container Sideloader ..... II-28
II-21 14-Ton Wheel Mounted Container-Handling Crane ..... II-28
II-22 Projected DOD-Wide MF Inventory (Nominal) ..... II-30
II-23 Basic Mobile Facility Types A and B ..... II-31
II-24 Integration Unit Mobile Facility ..... II-32
II-25 Side-Opening Mobile Facility Type A ..... II-34
II-26 Side-Opening Mobile Facility Type B ..... II-35
II-27 Side-Opening Mobile Facility Type B Modified ..... II-36
II-28 Side-Opening Mobile Facility Type C ..... II-37
II-29 Examples of Major Ancillary Equipment ..... II-38
II-30 Dolly Set: Lift, Transportable Shelter, 7 1/2 Ton M1022A1 ..... II-39
II-31 Unloading Mobile Facility Using Forklift ..... II-39
II-32 Mobile Facility Caster Lifting Jack ..... II-40
II-33 Unloading Mobile Facility Using Lifting Sling and Crane ..... II-41

Table of Contents


II-34 End Positioning Mobile Facility (MF) on Coupled Cargo Pallets ..... II-42
II-35 Mobile Facility Attached to Coupled Cargo Pallets ..... II-43
II-36 Coupled Mobile Facility Shipping Pallets Attached with Chain Tie-Down Devices to Rollerized Transport Vehicle ..... II-44
II-37 463L Air Cargo Pallet (HCU-6/E) ..... II-44
II-38 60,000-Pound 463L Aircraft Loader ..... II-45
II-39 25,000-Pound 463L Aircraft Loader ..... II-45
II-40 40,000-Pound 463L Aircraft Loader ..... II-46
II-41 Wide Body Elevator Loader ..... II-46
III-1 Basic Palletized Load System Truck/Trailer ..... III-4
III-2 Logistic Vehicle System ..... III-5
III-3 Non-Self-Sustaining Containership ..... III-6
III-4 Self-Sustaining Containership With Containerized Units ..... III-7
III-5 Container RO/RO, a Combination Carrier ..... III-8
III-6 Types of Services to Shippers ..... III-9
III-7 Organic/Military Aircraft Movement Limits for Containers and Pallet Trains ..... III-11
IV-1 Categories of Department of Defense International Organization for Standardization (ISO) Containers ..... IV-2
IV-2 Supply or Service Needs Met by Contracting ..... IV-4
V-1 Authorities Providing Export Releases for Release Unit Shipments ..... V-3
V-2 Medium Truck Company Capability ..... V-8
VI-1 Examples of Special Handling Instructions ..... VI-5
VI-2 Delineation of Responsibilities ..... VI-7
VI-3 Materiel Categories ..... VI-13
VI-4 Responsibilities of Movement Planners at the Senior Movement Headquarters During Planning ..... VI-19
VI-5 Theater Container Management Objectives ..... VI-25

# EXECUTIVE SUMMARY
## COMMANDER'S OVERVIEW

- **Defines Intermodalism and Intermodal Containers**
- **Discusses Standards, Specifications, Type, and Availability**
- **Describes Special Purpose and/or Tactical Shelters**
- **Provides Descriptions of Types of Transport**
- **Explains Management and Control of Operations**
- **Outlines Planning and Implementing Container Operations**

### Intermodalism and Intermodal Containers

*Intermodal containers are employed as part of the Defense Transportation System across the range of military operations.*

**Intermodalism** is the transferring of passengers or transshipping of cargo among two or more modes of transportation. In concert with intermodalism, **containerization** facilitates and optimizes carrying cargo via multiple modes of transport (sea, highway, rail, and air) without intermediate handling of the container contents.

**Intermodal transportation that is flexible and fast is used by the Department of Defense** (DOD) to prepare, employ, deploy, support, and sustain forces assigned or committed to a theater of operations or objective area. Assets and systems have been designed to facilitate rapid movement with minimum impediments to the deployment flow. **Standardization** facilitates ease of handling. **Container status** and **in-transit visibility of cargo** are essential for effective and efficient shipment of cargo, and the use of containerships facilitates unit integrity and cargo security.

### Standards and Specifications

*Commercially approved, common standards are established for compliance.*

**Standards serve to ensure interoperability** in the movement of containers between modes and countries, increase efficiency and effectiveness, and foster a seamless flow of cargo. **International standards** are developed by the International Organization for Standardization (ISO) and the American National Standards Institute. **Federal standards** are contained in rules and regulations that implement US law. There are also Military Performance Specifications for containers.

## Type and Availability

*Both Department of Defense (DOD)-owned and commercial containers support military operations.*

**Common-user containers** are leased, procured, or made available from DOD-owned inventories to support the requirements of all Services. **Special containers** designed to support Service and/or program-unique requirements are dedicated to a particular need. **Unit-owned containers** support the transportation and logistical needs of military units. **Commercial containers** are generally available through two sources: ocean carriers as part of their intermodal service, or container leasing companies for use in the DOD-operated system.

*Container dimensions and capabilities vary dramatically.*

The majority of containers conform to **ISO specifications**. The inventory of US-owned commercial containers continues to grow dramatically. In the continuing necessity to containerize increasing volume of goods, customers have sought containers of increased height, length, and width. Despite this trend in volumetric growth, **the majority of the US-owned standard dry cargo container fleet remains as 20- and 40-foot units**.

## Special Purpose and/or Tactical Shelters

*Mobile facilities provide capability for rapid deployment of operational and logistic resources to any theater worldwide.*

The **Naval Air Systems Command Mobile Facility Program** is organized to provide tactical shelters to Navy and Marine Corps aviation activities for aircraft logistic support. Additionally, **mobile facilities** are provided to other Navy (non-aviation) and DOD organizations for a variety of military-related functions. A Naval Air Systems Command Headquarters program manager has been assigned to establish policies and procedures and to develop and execute an overall mobile facility program. Mobile facility **program equipment** includes tactical shelters and major related equipment essential to tactical and garrison operations.

Most **local transportation** of mobile facilities is accomplished by using a mobilizer, materials handling equipment, or caster jacks. Continental United States and theater line haul transportation are accomplished by air ride trailer and strategic transportation by ships and aircraft. Mobility requirements concern the planning and preparation prior to mobile facility shipment.

## The Airlift System

*The 463L system constitutes the majority of materials handling equipment used in support of airlift operations.*

The primary platform used to transport military cargo in the airlift system is the **463L HCU-6/E cargo pallet**. Due to the weight of ISO containers, the movement of large numbers of ISO containers in the airlift system would be done only in the most extreme situations. When moving in the airlift system, ISO containers are loaded on aircraft utilizing the 463L pallet or the ISO/Air Cargo Pallet. ISU-60/ISU-90 containers are also compatible with the airlift system. **Materials handling equipment and/or cargo handling equipment requirements** for loading and unloading containers on and off aircraft need to be identified simultaneous to aircraft selection.

## Intermodal Container Transport

*Intermodal containers can be transported by land, air, and sea.*

**Rail.** Within the US, movements of containers and trailers via rail are handled primarily using specialized intermodal cars. Widespread use of new intermodal cars has permitted rail carriers to meet shipper's needs and to compete economically with origin-to-destination highway transportation. Intermodal container shipment by rail is becoming increasingly important in many foreign countries.

**Highway.** Container chassis are specialized trailers with twist locks for ISO containers which allows transportation of ISO containers over highway.

**Air.** In times of crisis or war, the Air Mobility Command will provide airlift support for all ISO containers and tactical shelters. During peacetime, airlift of ISO containers and tactical shelters must be air eligible cargo with an appropriate transportation priority.

**Sea.** The three types of containerships used in the sea transportation of containers are self-sustaining, non-self sustaining, and combination carriers. Carriers may provide either carriage of containers under liner terms or may charter all or part of their vessel.

## Management and Control of Operations

*DOD container management provides visibility and control of all DOD-owned or leased intermodal containers.*

The **Joint Staff** is responsible for particular functions with respect to intermodal containerization, and **geographic combatant commanders** are responsible for the management and control of assets and systems in their area of responsibility. The **United States Transportation Command**, the single manager for transportation, manages DOD intermodal

containers while they are moving in the Defense Transportation System, exercises combatant command (command authority) over DOD container system assets, works with the DOD logistics agencies and combatant commanders, and provides DOD container capability.

## Procurement and Leasing

*Containers and intermodal equipment can be purchased or leased.*

**The Military Sealift Command is responsible for the purchase or lease** of commercial containers and intermodal equipment used in day-to-day common-use service. Units should project requirements for **Service-owned containers and pallets** prior to deployment and coordinate with the installation and/or base transportation office. **Contingency contracting** can be an effective force multiplier of combat service support for deployed forces.

## In-Transit Visibility

*Shippers of cargo are required to generate transportation information.*

**In-transit information** must be generated in accordance with procedures established in DOD Transportation Regulations. **Standard electronic data interchange transactions** have been developed jointly by industry and government. **Transportation Automated Information Systems**, developed and operated by the Services, are fully dependent on data standardization. The **Global Transportation Network** is the DOD in-transit visibility backbone of the DOD Total Asset Visibility Program.

## Planning Container Operations

*The use of intermodal resources should be prioritized during the deliberate and crisis action planning processes.*

When DOD-owned, Service-owned or leased containers are planned to be used, **the following factors must be considered:** availability and location of containers; time and resources required; origin outload capability; theater infrastructure; and force structure. **Deliberate planning** requires continuous updating, evaluation, and analysis of information and intelligence. Service components must plan for and be fully aware of **theater reception, staging, onward movement, and integration plans,** to include container and pallet management and control. Container movement and handling requires **specialized equipment** which is authorized to each of the Services. **Information and procedures** are provided in various sources in order to approximate pallet and container requirements.

## Container Operations

*Effective and efficient use of intermodal containers requires that all aspects of container operations be factored into plans.*

Although the Services maintain the limited capability to deploy unit equipment by container and/or containership, the preferred method for unit deployment by sea is the use of Fast Sealift Ships or other roll-on/roll-off ships. **Maximum movement of materiel by containers is the preferred resupply method. Consolidation and Containerization Points** have evolved to make more complete use of 20- and 40-foot ISO containers, 463L pallets, and the benefits associated with reduced cargo handling. US laws concerning the packing, inspecting, shipping, and handling of ammunition or hazardous material still apply to containerized shipments and container handling equipment.

## Theater Reception, Staging, Onward Movement and Integration, and the Retrograde Movement of Containers

*The use of containerization for all deployments magnifies the need for a responsive theater distribution system.*

An efficient and timely inter- and intra-theater strategic movement of cargo, personnel, and information is key to **responsive force projection** and **successful theater reception, staging, onward movement** and **integration of cargo, and its retrograde movement**. A comprehensive plan for reception and onward movement requires adherence to a step-by-step process. A critical requirement for proper container distribution management is the interfacing of the Services and/or automated systems. Within the theater of operations, there is a **container handling mission** at the destination and intermodal points throughout the system. The central receiving and shipping point receives containers with cargo that must be sorted before transshipment to the supply support or owning unit. Containers should be used for **retrograde cargo** if the cargo can be containerized, if the cargo is on hand for movement, and if it does not interfere with the reception and onward movement of containers.

## Amphibious and Logistics Over-the-Shore Operations

*Logistics over-the-shore environments require unique operations, equipment, and procedures for conducting container discharge operations.*

During an **amphibious operation**, container usage by the assault echelon will be minimal. **Container usage can be expected to increase** with the deployment of the assault follow-on echelon and increase even more significantly with the introduction of follow-up stores and supplies. A critical aspect of transferring cargo ashore involves the **transfer at the beach** of containers from lighterage to transport vehicles. The container control site will receive, identify, and direct inland distribution and retrograde containers.

## CONCLUSION

This publication describes joint tactics, techniques, and procedures for effective and efficient use of intermodal containers and systems to deploy, sustain, and redeploy forces. It covers all types of ISO intermodal containers and flatracks for the surface transportation system and 463L pallet and/or container systems for the air transportation system. This publication describes planning and operational procedures for employing intermodal principles and intermodal containers in operations from unit installation and/or depot through air and seaports of embarkation or debarkation into the theater of operations and return. Use of intermodal containers and systems is applicable to all types of cargo (i.e., all classes of supply).

# CHAPTER I
# INTRODUCTION TO INTERMODALISM

*"Victory is the beautiful, bright-colored flower. Transport is the stem without which it could never have blossomed."*

**Winston Churchill**

## 1. Background

**The Department of Defense (DOD) relies on commercial sealift to move 85% of cargo during contingency operations.** The US and world merchant fleets are dominated by large, fast containerships with supporting corporate infrastructure (e.g., container handling equipment, terminals, information systems, tractors and/or chassis, and experienced personnel). Experience in Operations DESERT SHIELD and DESERT STORM demonstrated the inability of the Department of Defense to effectively use containers and containerships for the movement of the large volumes of military cargoes, especially unit equipment and ammunition, that are required by modern forces. In addition to the sheer volume of containers, the lack of an in-transit visibility (ITV) system to keep an easy, fast, and accurate account of equipment and supplies within the shipped containers led to port saturation through the mistaken double and triple requisitioning of some munitions, which then led to the chartering of large numbers of smaller, slower breakbulk vessels (versus containerships) at a considerable cost in time and money. These problems also significantly contributed to the slower deployment of combat support and combat service support (CS/CSS) forces than could otherwise have been achieved.

## 2. Purpose

Current Service policies and procedures relating to intermodal containerization are spread through numerous publications. Many are being revised in view of lessons learned from Operations DESERT SHIELD and DESERT STORM. The purpose of this publication is to integrate existing policy, tactics, techniques and procedures into a **single joint publication to cover planning, integrating, and executing intermodal container operations** in war, contingency missions, and military operations other than war from origin to theater destination. This chapter describes the fundamental principles of intermodalism and the use of intermodal containers when employed as part of the Defense Transportation System (DTS) across the range of military operations.

## 3. Fundamental Principles of Intermodalism and Intermodal Container Use

Deployment operations can involve intermodal movement of personnel and equipment by air, land, and sea from unit installations and/or depots to the theater of operations. Intermodalism is simply the transferring of passengers or transshipping of cargo among two or more modes of transportation (sea, highway, rail, and air). **In concert with intermodalism, containerization facilitates and optimizes carrying cargo** via multiple modes of transport without intermediate handling of the container contents. **Efficient and effective use of intermodalism and containerization is critical for mobility and transportation support** to single-Service or joint operations worldwide. The following concepts apply:

a. **Mobility and Readiness.** The mission of the joint planning and execution

community is to prepare, employ, deploy, support, and sustain forces assigned or committed to a theater of operations or objective area. Intermodal transportation that is flexible and fast is used by the Department of Defense to accomplish this mission.

- The **DOD airlift system** is keyed to fast response using both military aircraft operating day-to-day and contracted commercial aircraft, as required. Common-user organic military aircraft and certain commercial aircraft can be configured to rapidly load equipment using roll-on/roll-off (RO/RO) ramps and standard 463L pallet systems.

- The **continental United States (CONUS) land transportation system** uses highway and rail as well as inland waterway systems to move materiel to aerial ports and/or seaports of embarkation for loading on strategic airlift and sealift assets. Rolling stock can be loaded directly on railcars via end ramps. This facilitates fast loading at installations and discharge at ports of debarkation during deployment operations. Intermodal containers can be quickly loaded on and unloaded from railcars using overhead cranes. Containers moved by highway can proceed directly to pierside for loading aboard containerships using container terminal gantry cranes or ship's cranes. They may also be off-loaded from the chassis by specially designed Container Handling Equipment (CHE) and positioned in the terminal's container yard for loading aboard ship. Containers moved by railcar, which normally do not have direct pierside access, require CHE for off-load and transfer to pierside.

- The **DOD sealift system** is keyed to provide rapid support using government-owned and chartered vessels. A significant number of the vessels are self-sustaining RO/ROs, which are characterized by large cargo capacities and rapid loading and discharge rates. Commercial containership capability is available to the Department of Defense through time or voyage charters and on a day-to-day basis via worldwide container agreement rate guides and other dedicated or special agreements. These assets can be rapidly loaded using intermodal systems. Training, planning, and preparation to deploy unit equipment, ammunition, and follow-on sustainment using RO/RO vessels and containerships ensures responsive and effective support to the warfighting combatant commanders (CINCs).

b. **Seamless Flow of Materiel and Information.** Assets and systems have been designed and employed to facilitate the rapid movement of personnel, equipment, supplies, and information with minimum impediments to the deployment flow.

- In the **surface transportation system**, RO/RO vessels and containerships are linked to land transportation (highway and/or rail) through port and water terminal systems that provide for a smooth, seamless flow of equipment and materiel from mode to mode. RO/ROs provide the primary means of strategic sealift for initial unit deployment and unit equipment, i.e., tanks, towed artillery, armored personnel carriers, and rolling stock, whereas containerships are the ideal means of transport for sustainment and resupply. Due to the limited numbers of RO/ROs and time requirements, all units or forces, especially CS/CSS, must be prepared to be deployed by containership. Accompanying supplies and equipment, to include ammunition, are well suited for containerization and rapid deployment using containerships. While other ship types (e.g., breakbulk, barge carriers) also represent intermodal

sealift assets, they primarily augment RO/RO vessels and containership capability when this is insufficient for the operation being undertaken, when theater infrastructure constraints dictate, or when the tactical mission or situation precludes use of containers in delivering materiel and equipment.

- In the **air transportation system**, military assets are configured to allow for RO/RO of equipment or rapid uploading or unloading using the 463L pallet system. While it is preferred that 463L assets remain in the airlift system, system components may have to move intermodally via surface transportation in support of the geographic combatant commander's objectives and priorities. Responsibility for controlling and returning 463L equipment to the airlift system remains with the geographic combatant commander.

- **DOD automated information systems** are designed to interface with commercial transportation information systems to receive and pass required personnel, unit, and cargo movement data and other transportation information to appropriate commands and agencies throughout the DTS. This capability exists to the extent that commercial carriers have formatted their Electronic Data Interchange (EDI) reports to Department of Transportation (DOT) Standards.

c. **Origin to Destination.** As shown in Figure I-1, effective intermodal movement of personnel, equipment, and supplies begins at or near the origin and continues unimpeded to or near the final destination.

d. **Standardization.** Intermodal containers are transportation assets designed to maximize cargo throughput with minimum

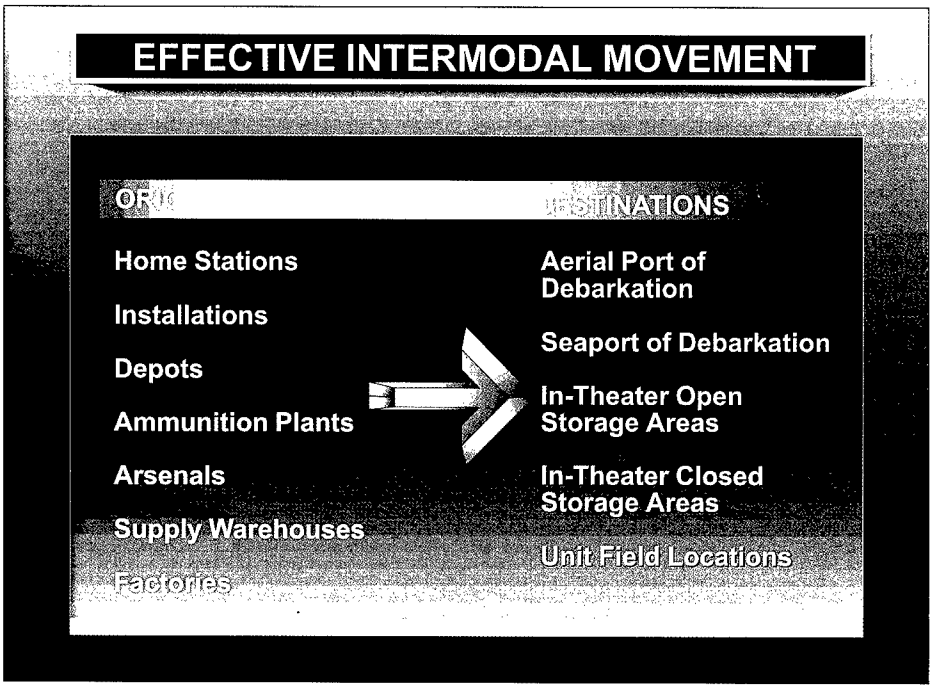


**Figure I-1. Effective Intermodal Movement**

handling of cargo at mode transfer points. **This capability demands standardization for ease of handling.**

- Intermodal containers used within the DOD surface transportation system for international trade are **designed to conform to the American National Standards Institute and International Organization for Standardization (ANSI/ISO) specifications.** These containers are available in a variety of configurations which include end opening, side opening, half-heights, open top, flatrack, refrigerated, liquid bulk (tank), and modular quadruple container (QUADCON) and/or triple container (TRICON).

- Intermodal containers used within the airlift system **conform to the military 463L pallet standard**. These include both pallets and containers.

e. **Container Status and/or In-transit Visibility**

- Container status and ITV of cargo are **essential for effective and efficient use of intermodalism employing containerization**. Geographic combatant commanders and their components need to know where their critical resources are and when those resources will arrive to execute or modify courses of action during joint operations. The Chairman of the Joint Chiefs of Staff (CJCS) requires this information in order to prioritize, allocate, and reroute resources between theaters, if required.

- **The visibility of all containers** moving in the DTS (DOD-owned, leased or commercial) and their contents **must be available to the Chairman of the Joint Chiefs of Staff via an automated capability**. Identification and status information should include type of ISO container, location, and status, loaded or empty. The Department of Defense is developing and refining information management systems to provide ITV capability. These must be interoperable with commercial systems and other DOD supply, transportation, and in-theater systems supporting movement of material from origin outload, through distribution operations, to the end user in theater.

f. **Cargo Integrity, Security, and Safety. The large size of containerships**, along with state of the art commercial and developing DOD in-transit visibility systems and the inherent security of ISO containers, **facilitate unit integrity and cargo security**. When utilizing modern intermodal lift capability, unit integrity objectives of the shipping Service will be adhered to and maintained at the highest level possible consistent with cargo types and capability and/or capacity of vessels involved. Intermodal containers decrease pilferage, injury to personnel, and damage to equipment and supplies. This is particularly important when moving unit basic loads and resupplying quantities of ammunition.

# CHAPTER II
# INTERMODAL EQUIPMENT

*"There must be great care taken to send us munition and victual whithersoever the enemy goeth."*

**Francis Drake**

## 1. Purpose

This chapter familiarizes personnel with various standardization organizations, standards, and DOD specifications for intermodal containers; describes various types and capabilities of military and commercial intermodal containers, flatracks, 463L pallets, and materials handling and container handling equipment (MHE/CHE); and briefly describes the mission and make-up of the military units that provide for container and/or pallet handling operations in the Department of Defense.

## SECTION A. STANDARDS AND SPECIFICATIONS

## 2. International Standardization

**The key to intermodalism and use of intermodal containers is the establishment and compliance with commercially approved, common standards.** These serve to ensure interoperability in the movement of containers between modes and countries, increase efficiency and effectiveness, and foster a seamless flow of cargo. **The following organizations develop international standards:**

a. **The International Organization for Standardization** develops and maintains a series of standards for international freight containers and equipment. The standards ensure that size, structural capabilities, and interoperability are maintained internationally. Figure II-1 provides a listing of ISO documents relating to intermodal containers.

b. **ISO Technical Committee 104 handles all matters related to freight containers.** Three subcommittees, each of which has several working groups, address specific aspects of general purpose containers: dimensions and structural requirements, special purpose containers, and identification and communication (marking and coding, automatic equipment identification, EDI).

c. The United States participates in ISO under the sponsorship of the **American National Standards Institute**. ANSI has established Technical Advisory Groups to form consensus positions. The Department of Defense participates in ISO Technical Committee 104 (TC104) through the ANSI Technical Advisory Group to ISO TC104. Both the Tank and Automotive Research Development and Engineering Center and the Military Traffic Management Command, Transportation Engineering Agency are members of this group. ANSI delegates attend ISO meetings and participate in developing international containerization standards and advancing US interests.

## 3. Federal Standards for Containers

**Federal standards for intermodal containers are contained in rules and regulations that implement US law,** which often adopts or enacts international agreements, conventions, laws, or regulations for the United States. DOD components must maintain all DOD-owned intermodal containers to ANSI/ISO standards in accordance with US laws and regulations to ensure compatibility and interoperability with

| ISO Documents for Freight Containers | |
|---|---|
| 1496-1 | Series 1 Freight Containers - Specifications and Testing. Part 1: General Cargo Containers for General Purposes. |
| 1496-2 | Series 1 Freight Containers - Specifications and Testing. Part 2: Thermal Containers |
| 1496-3 | Series 1 Freight Containers - Specifications and Testing. Part 3: Tanks Containers for Liquids, Gases and Pressurized Dry Bulk. |
| 1496-4 | Series 1 Freight Containers - Specifications and Testing. Part 4: Non-pressurized Containers for Dry Bulk. |
| 1496-5 | Series 1 Freight Containers - Specifications and Testing. Part 5: Platform and Platform Based Containers. |
| 1496-6 | Series 1 Freight Containers - Specifications and Testing. Part 6: International Cargo - Security Devices. |
| 668 | Series 1 Freight Containers - Classification, Dimensions, and Ratings. |
| 830 | Freight Containers - Terminology. |
| 2308 | Hooks for Lifting Containers of up to 30 Tons Capacity - Basic Requirements. |
| 1161 | Series 1 Freight Containers - Corner Fittings, Specifications. |
| 3874 | Series 1 Freight Containers - |
| 6346 | Freight Containers - Coding, Identification, and Marking. |

**Figure II-1. ISO Documents for Freight Containers**

the commercial intermodal transportation system.

a. **Container structure and condition are monitored within the international freight system.** In 1980, the United States enacted the **International Safe Container Act**. The Act implements the **International Convention for Safe Containers (CSC)** that the United States ratified in 1978. The US Coast Guard (USCG) promulgates regulations implementing the Act in Title 49, Code of Federal Regulations (CFR), Parts 450-453.

b. **Federal rules require that new and existing containers meet CSC structural standards.** The USCG can delegate approval authority that containers meet the standards to persons and organizations (who are independent of the influence of container owners), manufacturers, operators, and/or container lessors. A container must be affixed with a CSC safety approval plate confirming its structural serviceability to be used in international transport.

c. **Periodic examination of containers is required to ensure maintenance of the standards.** Federal regulations describe general requirements for container inspections, but do not include detailed inspection criteria. Voluntary industry groups, such as the Institute of International Container Lessors, have translated the general CSC requirements into specific inspection criteria to ensure safety in commerce.

d. **Other international standards and Federal regulations also address container condition** and set forth additional requirements, particularly for Class I explosive materials. The **International Maritime Organization (IMO)**, a specialized agency of the United Nations,

promotes safety in shipping and the prevention of maritime pollution from ships. The United States, with technical expertise provided by the USCG, participates in IMO on the Department of State's Shipping Coordinating Committee. The USCG and the Research and Special Programs Administration (RSPA) represent the Department of Transportation (DOT) at IMO subcommittee sessions. DOT's Office of Hazardous Materials Safety is part of RSPA.

e. **The Carriage of Dangerous Goods subcommittee of the IMO publishes and maintains the international maritime dangerous goods (IMDG) code.** The code specifies requirements for containers used for carrying hazardous materials, including ammunition and other military explosives. These requirements are more restrictive than the CSC. A decision by RSPA, published in December 1990 in Title 49, Parts 107 and 171-179, adopted many parts of the IMDG Code into Federal regulation. Subpart 176.172 of the regulations specifies the structural serviceability requirements for freight containers used for shipping Class I (explosives) aboard ship.

## 4. Military Performance Specifications (MILSPECs) for Containers

The following are descriptions of MILSPECs for dry cargo and refrigerated containers:

a. **MIL-C-52661.** Containers, Cargo. This specification covers nominal 20-foot containers for transportation, distribution, and storage of military supplies. Figure II-2 shows the types of containers with specifications.

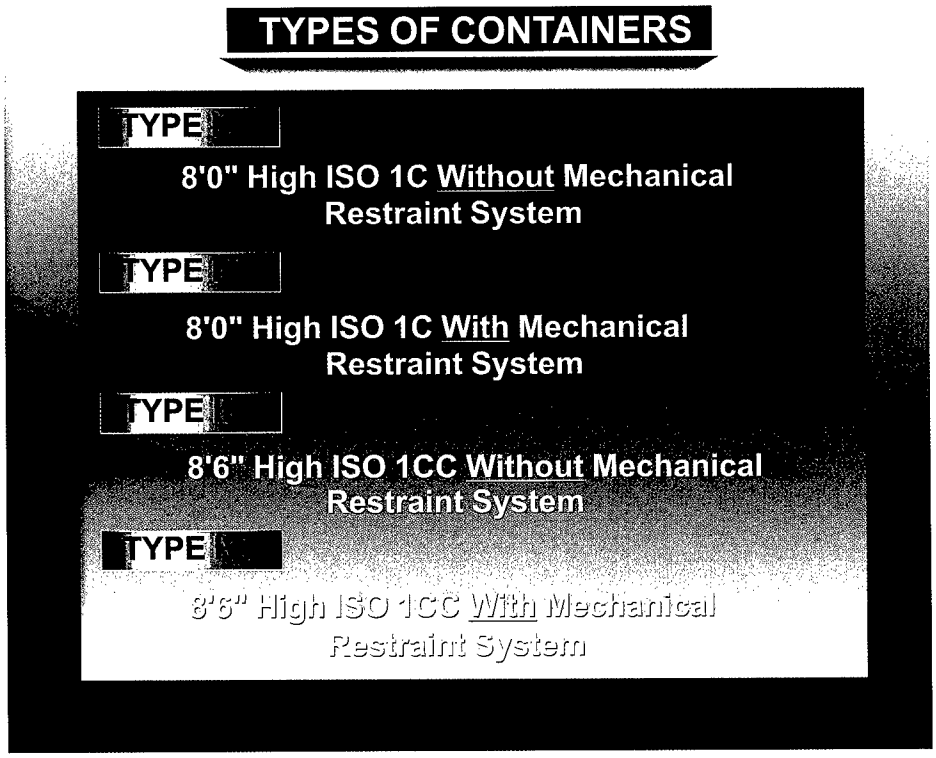


**Figure II-2. Types of Containers**

b. **MIL-C-52788.** Container, Refrigerated (8' x 8' x 20') Insulated. This specification covers a nominal 20-foot (length) container equipped with a 9,000 BTU per hour electric motor-driven refrigeration unit powered by a self-contained 10-KW diesel engine generator or external power source.

## 5. Commercial International Intermodal Practices

Since there are no established international standards for transportation systems as a whole and because transportation networks vary from country to country, **departures from ISO standardization occur**. Examples of variance in networks include clearances, axle loadings, track curvature, and speed limits. Therefore, commercial international intermodal practices adapt to the regional infrastructure. This is also true for military operations involving strategic deployment and sustainment that use intermodal containers. Theater infrastructure and the force structure (commercial and military) required to support intermodal operations are primary considerations in deciding where and when intermodal containers may be employed.

## 6. Domestic Regional Intermodal Systems

**Domestic regional intermodal systems develop in a manner that maximizes economic response to commercial competitiveness.** For example, large US domestic trade volumes have resulted in container transport systems geared to that traffic. Non-ISO standard domestic containers developed as increases in roadable sizes were permitted. US domestic standard containers are generally 45, 48, and 53 feet in length, 8'6" in height, and 8'0" in width.

# SECTION B. TYPES AND AVAILABILITIES OF CONTAINERS AND TYPES OF CONTAINER HANDLING EQUIPMENT

## 7. Intermodal Containers — General

**This section addresses both DOD-owned and commercial containers that support military operations.** Intermodal containers are employed to support common-user transportation requirements, Service and/or program-unique mission requirements, unit deployment, and sustainment.

a. **Common-user containers are leased, procured, or made available from DOD-owned inventories** to support the intermodal transportation requirements of all Services. **These containers are managed and controlled by the US Transportation Command (USTRANSCOM) while they are in the DTS through the Military Traffic Management Command (MTMC).** The Military Sealift Command (MSC) leases or procures commercial containers for common-use requirements. The Aviation and Troop Command centrally procures particular MILSPEC containers should they be required.

b. **Special containers designed to support Service and/or program-unique mission requirements include the Navy's Deployable Medical System containers and the Army's contingency containers that are** dedicated to a particular need, such as refrigerated containers for mortuary requirements. These containers are also managed and controlled by USTRANSCOM, through MTMC, while in the Defense Transportation System.

c. **Unit-owned containers** are generally 20 feet or less in length (e.g., military vans [container] [MILVANs], QUADCONs, TRICONs), **support the transportation and logistical needs of military units,** and are listed on the unit table of organization and equipment or common table of allowances (CTA).

d. While this section provides a general description of the latter two types of container assets, **the focus will be on the common-use containers which can be used by all Services**. Equipment deployment and storage system (EDSS) containers and shelters are not addressed, because they are not considered strategic transportation assets.

## 8. Commercial Container Sources

**Commercial containers are generally available through two sources: ocean carriers** as part of their intermodal service, or from **container leasing companies** for use in the DOD-operated system. It should be noted that carriers lease a significant number of their containers from container lessors. Initially, the Department of Defense must rely on the commercial transportation and/or container industry to supply containers across the range of military operations. If during a deployment, or to meet other requirements of the Nation's defense, containers cannot be obtained commercially from the transportation and/or container industry, the Maritime Administration has authority to allocate containers or obtain priority for their use to meet military requirements in accordance with (IAW) 46 CFR Part 340.

## 9. Container Dimensions

**Container dimensions and capabilities vary dramatically**, depending upon the manufacturer and the target customer. **The majority of containers conform to ISO specifications.** Figure II-3 (ISO Document 668) shows the characteristics of the ISO 20- and 40-foot containers. These standards allow for some variance. External dimensions are required dimensions; however, internal dimensions and the door opening size are minimum dimensions.

## 10. Status and Trends in Container Size

a. **The inventory of US-owned commercial containers continues to grow dramatically.** The Maritime Administration's Office of Intermodal Development, which monitors US ownership, estimated this inventory to be approximately 2.7 million containers equaling 4.1 million twenty-foot equivalent units (TEUs). Figure II-4 provides

**ISO Standard Characteristics**

| Dimensions (inches) | | 20-foot ISO | 40-foot ISO |
|---|---|---|---|
| Internal | Length | 230.9 | 472.3 |
| | Width | 91.7 | 91.7 |
| | Height | * | * |
| External | Length | 238.5 | 480 |
| | Width | 96 | 96 |
| | Height | 96 - 102 | 96 - 114 |
| Door Opening | Width | 90 | 90 |
| | Height | 83.5 - 89.5 | 83.5 - 101.5 |
| Max Gross Weight (1 lbs) | | 59200 | 67200 |

* Minimum internal height is external height minus 9.5 inches.

**Figure II-3. ISO Standard Characteristics**

an example of this growth for the period 1990 to April 1994.

b. In the continuing necessity to containerize increasing volumes of goods, **customers have sought containers of increased height, length, and width**. Containers with the original ISO external height of 8 feet are generally being replaced by containers measuring 8 1/2 feet high. Although not always in compliance with ISO standards, a limited but growing number of 9- and 9 1/2-feet high containers are also in the commercial inventory.

c. **Containers of 45-, 48-, and 53-feet lengths have been brought into service in increasing numbers.** Because of incompatibility with most ship cells, these longer units (particularly the 45- and 53-footers) have generally been considered a domestic asset. Forty-eight footers, both 8 and 8 1/2 feet wide, are becoming popular on some international routes, with the servicing carriers moving these assets either in specially modified holds or above deck.

d. Despite this trend of volumetric growth, **the majority of the US-owned standard dry cargo container fleet remains as 20- and 40-foot units,** with each type continuing to grow as shown in Figure II-4. Currently, the US-owned container fleet is essentially equally divided in number between 20- and 40-foot units. This means that approximately two-thirds of the total standard dry cargo carrying capacity is in 40-foot units. The 20-foot ISO container is the DOD standard size for the movement of ammunition (Class V). Both 20- and 40-foot containers will be used to move all other classes of supply and unit equipment subject to theater reception and onward movement capabilities. All Services must be prepared to handle both 20- and 40-foot ISO containers.

**Trends in US-Owned Commercial Container Fleet**

| Container Type | 1990 Quantity | 1994 Quantity | Percent Change |
|---|---|---|---|
| 20' ISO Box | 833042 | 1304913 | 56.6 |
| 40' ISO Box | 618966 | 1193753 | 92.2 |
| 20' Side-Opener | 446 | 85 | -80.9 |
| 20' Flatrack | 18728 | 13472 | -28.1 |
| 40' Flatrack | 14002 | 21799 | 55.7 |
| 20' Reefer | 18739 | 44080 | 135.7 |
| 40' Reefer | 42225 | 80474 | 90.6 |
| 20' Open Top | 30643 | 39151 | 27.8 |
| 40' Open Top | 17948 | 30251 | 68.8 |
| 20' Half-Height | 1193 | 727 | -39.1 |
| 20' Tank | 5914 | 11811 | 99.7 |
| 40' Tank | 53 | 2 | -96.2 |
| TOTAL Containers | 1603889 | 2740518 | 70.9 |
| TOTAL TEUs | 2289073 | 4066797 | 77.7 |

**Figure II-4. Trends in US-Owned Commercial Container Fleet**

e. While it is necessary for the Department of Defense to monitor trends in the quantity of commercial containers, **the truly important factor to the defense planning community is the availability of these assets**. Worldwide economic conditions dictate the number and location of containers which are available for DOD use. A key factor in determining availability is the quantity of lessor-owned containers not already under lease to a DOD shipper or ocean carrier (and hence available for lease by the Department of Defense). This quantity, expressed as a percentage of all lessor-owned containers, is referred to as the "off-hire rate." Its value depends largely on the balance of trade. A favorable balance of trade will increase the demand for containers for overseas shipment, decreasing the number of off-hire (available) containers within the United States.

f. **Off-hire rates can vary considerably by container type.** Specialty containers, such as refrigerated (reefer) units, flatracks, and open containers, often have a higher utilization rate (lower off-hire rate) than standard dry ISO units. In recent years, a specific market niche has been established for the standard 20-foot dry box (serving geographic regions and customers with less intense shipping requirements and lesser developed infrastructures). The off-hire rate for these commercial assets has also generally decreased in recent years.

## 11. Types of Intermodal Containers

A representative sample of container types is depicted in Figures II-5 through II-15. Listed are both military and commercial intermodal marine containers, most of which are identical in nature.

a. **End-Opening Container.** See Figure II-5a. **End-opening dry cargo units are the most common intermodal containers in the inventory.** They are both owned by the Department of Defense and are available for lease or purchase from commercial sources. End-opening containers come in various lengths, most commonly 20 feet and 40 feet. The large majority of these containers open only at one end. However, some ISO double end-opening containers (see Figure II-5b) do exist. These containers permit more rapid stuffing and unstuffing operations (at either origin or destination) for vehicles. The Department of Defense owns several container types which fit into this end-opening category. All MILVANs and ISO end-opening containers can be readily transported by most military and commercial container-handling equipment.

- **MILVAN.** The Ammunition Restraint MILVAN is made of steel with wood flooring and walls, and is capable of transporting between 31,560 lbs and 39,800 lbs of ammunition (dependent upon the actual tare weight of the particular MILVAN) for a total gross weight of 44,800 lbs per MILVAN. It has an internal restraint system of eight slotted steel rails permanently installed on each side wall, with 25 adjustable crossbars that can be inserted into the slots. The General Cargo MILVAN container is made of steel with hardwood flooring and plywood-lined walls, and is capable of transporting between 31,560 lbs and 39,800 lbs of general cargo (dependent upon the actual tare weight of the particular MILVAN) for a total gross weight of 44,800 lbs.

- **Commercial ISO.** The commercial 20-foot end-opening container can be used to transport munitions or general cargo. The door-end corner posts are modified with angle iron to enhance blocking and bracing. As there is no permanent restraint system, wooden blocking and bracing is used to restrain munitions.

## END-OPENING CONTAINER

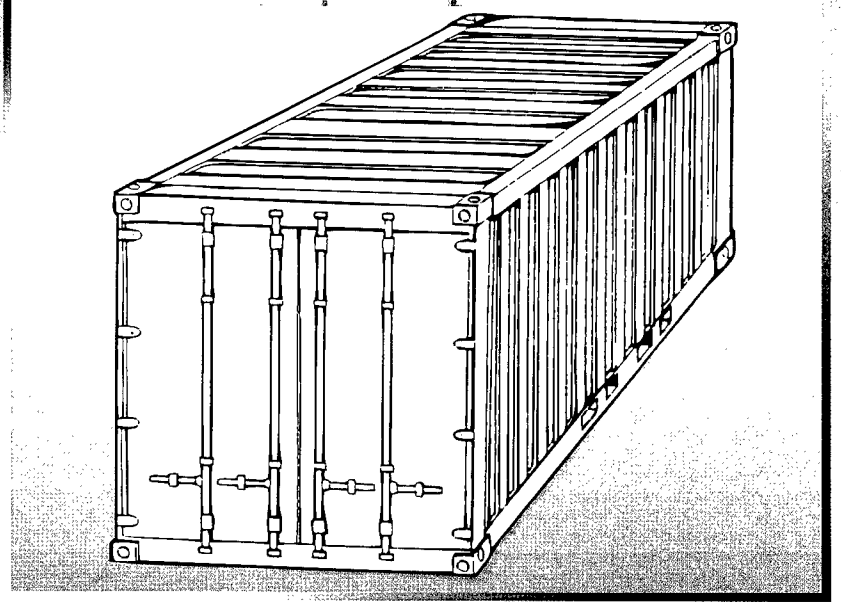

| CONTAINER TYPE | NATIONAL STOCK NUMBER |
|---|---|
| Ammunition Restraint MILVAN (8'x8'x20') | [illegible] |
| Ammunition Restraint MILVAN (8'x8.5'x20') | [illegible] |
| General Cargo MILVAN | [illegible] |
| 20' ISO End-Opening Container | [illegible] |
| 20' Shipping / Storage Container | 8115-01-083-4442 |

| Dimensions (inches) | | Military 20-foot | Commercial 20-foot | Commercial 40-foot |
|---|---|---|---|---|
| Internal | Length | 231.0 - 231.5 | 228 - 233 | 431 - 475 |
| | Width | 91.1 - 92.0 | 80 - 94 | 89 - 94 |
| | Height | 88.2 - 93.3 | 83 - 95 | 77 - 107 |
| External | Length | 238.5 | 238.5 | 480 |
| | Width | 96 | 96 | 96 |
| | Height | 96 - 102 | 96 - 102 | 102 - 115 |
| Door Opening | Width | 92 | 92 - 93 | 90 - 102 |
| | Height | 83.5 - 89.5 | 83.5 - 89.5 | 89 - 102 |
| Weight (lbs) | Tare | 5,000 - 13,240 | 3,800 - 5,555 | 6,000 - 10,800 |
| | Payload | 31,560 - 39,800 | 39,245 - 41,000 | 56,400 - 61,200 |
| | Gross | 44,800 | 44,800 | 67,200 |

**Figure II-5a. End-Opening Container**

## DOUBLE END-OPENING CONTAINER

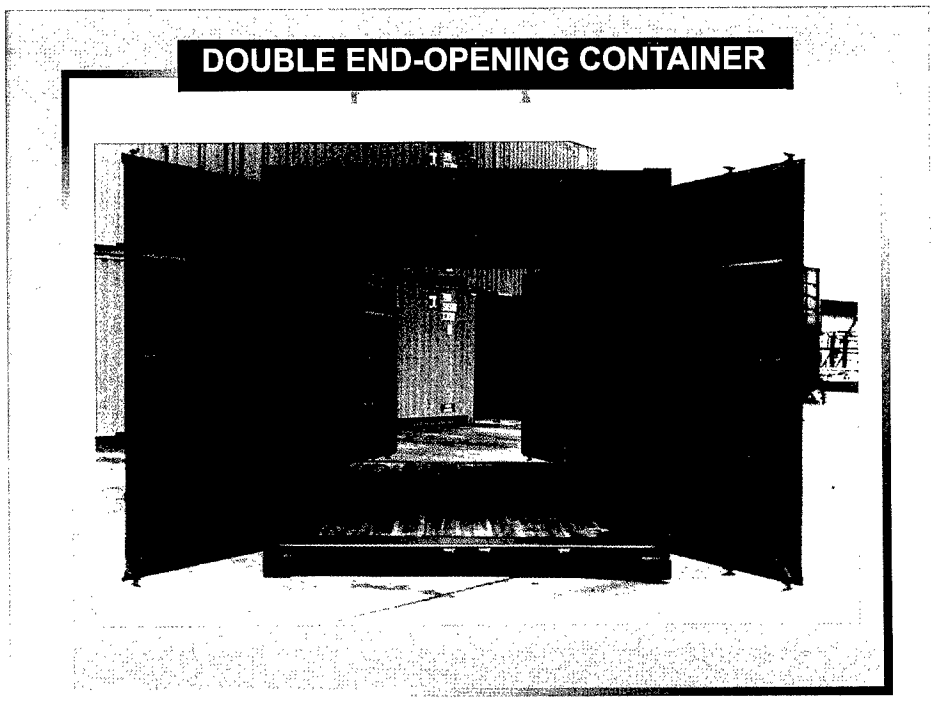

| DIMENSIONS | | |
|---|---|---|
| OUTSIDE LENGTH | 6058 mm | 19.87 ft |
| OUTSIDE WIDTH | 2438 mm | 8 ft |
| OUTSIDE HEIGHT | 2438 mm | 8 ft |
| INSIDE LENGTH | 5862 mm | 19.23 ft |
| INSIDE WIDTH | 2352 mm | 7.71 ft |
| INSIDE HEIGHT | 2212 mm | 7.26 ft |
| CUBIC CAPACITY | 30.5 $m^3$ | 1077.10 $ft^3$ |
| DOOR OPENING WIDTH | 2338 mm | 7.67 ft |
| DOOR OPENING HEIGHT | 2107 mm | 6.91 ft |
| ESTIMATED TARE WEIGHT | 2280 kg | 5026.53 lbs |
| MAXIMUM GROSS WEIGHT | 20320 kg | 44797.38 lbs |

CONSTRUCTION

GENERAL. The containers are designed, built and tested to meet the latest standards for general cargo containers. BS 3951, part 2, Section 2.1 and ISO 1496/1. They are of all welded steel construction using the MIG CO2 electric arc process. All external welds are continuous; where intermittent welding is used inside, the gaps are sealed with a fully curing mastic sealant. All sections (unless otherwise stated) are of high tensile steel to BS 4360 grade 50A or equivalent.

**Figure II-5b. Double End-Opening Container**

## REFRIGERATED CONTAINER

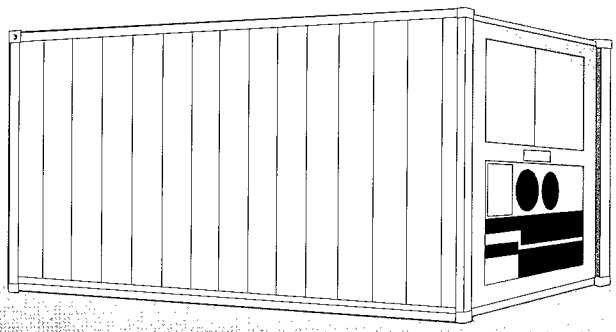

| CONTAINER TYPE | | | NATIONAL STOCK NUMBER | |
|---|---|---|---|---|
| Refrigerated (8'x8'x20') | | | 8115-00-015-7039 | |
| Dimensions (inches) | | Military 20-foot | Commercial 20-foot | Commercial 40-foot |
| Internal | Length | 190 | 215 | 441 - 456 |
| | Width | 89 | 89 | 86 - 90 |
| | Height | 83 | 83 | 86 - 107 |
| External | Length | 240 | 239 | 480 |
| | Width | 96 | 96 | 96 |
| | Height | 96 | 102 | 102 - 115 |
| Door | Width | 89 | 89 | 85 - 92 |
| Opening | Height | 82 | 86 | 82 - 98 |
| Weight | Tare | 8,800 | 6,800 | 9,450 - 12,775 |
| (lbs) | Payload | 36,000 | 38,000 | 54,425 - 57,750 |
| | Gross | 44,800 | 44,800 | 67,200 |

**Figure II-6. Refrigerated Container**

b. **Refrigerated Container.** See Figure II-6. Refrigerated containers (reefers) are owned by the Department of Defense and are available through commercial sources. **They provide the capability to transport, temporarily store, and distribute temperature-sensitive cargo such as food or blood.** Some military-owned reefers include a refrigeration unit with a 10-kilowatt generator. They can be plugged into an external power source or run off of their own generators. Most ships are equipped with a power source into which the containers can be plugged. Commercial reefers may not have their own generator. Several commercial reefers typically are plugged into a separate generator which fits into a container cell. Reefers have the outer dimensions of ISO containers and meet all ISO requirements for intermodal shipments.

c. **Side-Opening Container.** See Figure II-7. Twenty-foot side-opening containers are owned by the Department of Defense and are also available through commercial sources. **They are ISO containers with two double doors located on one side.** These doors open to allow easy access to the container's contents. The side-opening container can be lifted and transported by commercial and military conveyances. Military versions have internal tie-down rings which can be used to secure cargo during shipment. The military often uses side-opening containers for transporting munitions.

d. **Open Top Container.** See Figure II-8. **The open top container is used primarily by commercial industry to transport cargo items that are too high for a standard container.** An open top container can be stuffed from the top, or one end can be opened and it can be stuffed from there. Equipped with ISO standard corner fittings at the top and bottom, it can be lifted and transported readily by commercial and military handlers and conveyances. Open top containers require tarpaulins for cover during shipping and storage. (Containers cannot be used for sensitive items requiring high security and may also have agricultural restrictions.)

e. **Tank Container.** See Figure II-9. **The bulk tank container**, when installed in an ISO-standard frame, **is used for intermodal transport of liquids such as fuel and milk.** Tank containers are only available through commercial sources. If sent by air, tank containers with cargoes must be certified for air transport to prevent dangerous changes in aircraft center of gravity.

f. **Half-Height Container.** See Figure II-10. Half-height containers are owned by the Department of Defense and are available through commercial sources. They have the footprint of an ISO container with ISO standard structural members and corner fittings, and are **approximately half the height of a standard end-opening container**. With fixed sides, an open top, and one drop-end opening, material is accessible by either materials-handling equipment or crane. Tarpaulins accompany the containers for cover during shipping and storage. The Navy uses the half-height containers primarily to ship drummed oils and lubricants.

g. **QUADCONs.** See Figure II-11. **QUADCONs are not a common-use asset. They are unit-owned military containers.** They are currently part of the Marine Corps Family of Intermediate Size Containers. Other Services plan to procure QUADCONs in the near future. The Army has identified the QUADCON as the primary EDSS container for surface movement on its CTAs 50-909. The QUADCON has ISO corner fittings to allow for coupling of the QUADCONs into arrays of up to four units. An array of four QUADCONs has the same external length and width dimensions as a 20-foot ISO container and is designed to be lifted as a 20-foot unit and/or moved as a 20-foot unit in ocean shipping. **The**

## SIDE-OPENING CONTAINER

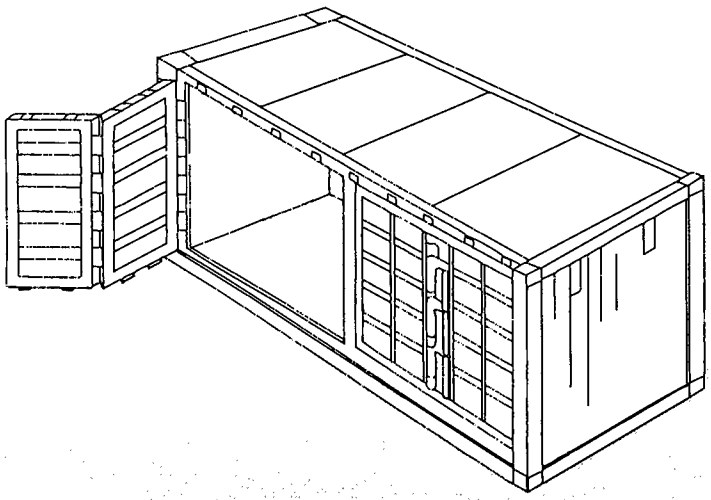

| CONTAINER TYPE | NATIONAL STOCK NUMBER |
|---|---|
| USAF, 2 Fork Pockets | 8145-L900411D |
| USAF, 4 Fork Pockets | 8145-L900412D |
| Army | 8115-01-363-8668 |
| USAF, 4 Fork Pockets | 8140-01-296-7241CU |

| Dimensions (inches) | | Military 20-foot | Commercial 20-foot |
|---|---|---|---|
| Internal | Length | 232.5 | 231 - 233 |
| | Width | 89.5 | 91 - 93 |
| | Height | 88 | 88 - 95 |
| External | Length | 238.5 | 238.5 |
| | Width | 96 | 96 |
| | Height | 102 | 96 - 102 |
| Door Opening | Width | 222 | 92 - 98 |
| | Height | 84.5 | 82 - 90 |
| Weight (lbs) | Tare | 5,000 | 4,200 - 4,360 |
| | Payload | 47,910 | 40,170 - 40,600 |
| | Gross | 52,910 | 44,800 |

Figure II-7. Side-Opening Container

## OPEN TOP CONTAINER

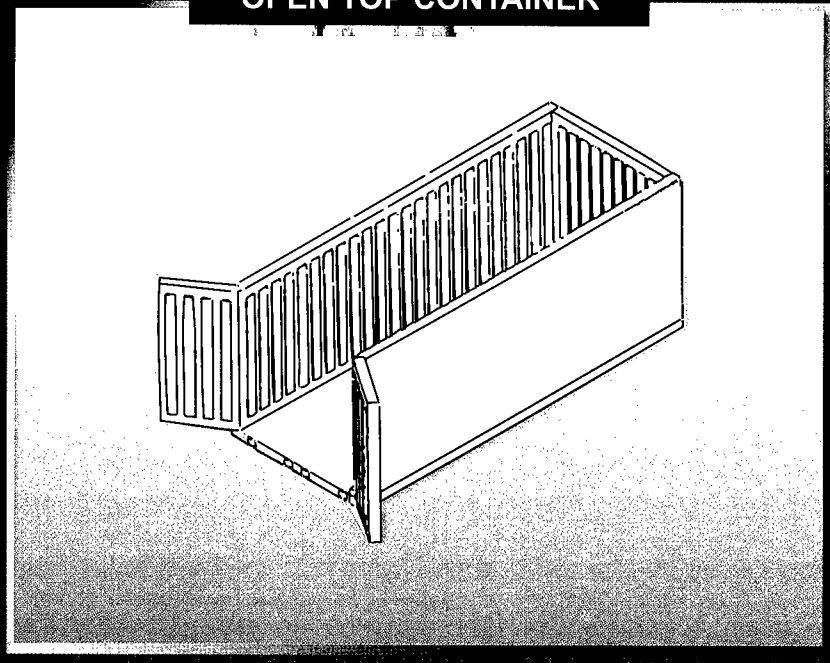

| Dimensions (inches) | | Commercial 20-foot | Commercial 40-foot |
|---|---|---|---|
| Internal | Length | 232 - 233 | 473 - 475 |
| | Width | 92 - 93 | 92 - 93 |
| | Height | 87 - 92 | 89 - 92 |
| External | Length | 239 - 240 | 480 |
| | Width | 96 | 96 |
| | Height | 96 - 102 | 102 - 103 |
| Door | Width | 92 | 90 - 92 |
| Opening | Height | 84 - 89 | 89 - 91 |
| Weight | Tare | 4,500 - 5,200 | 7,760 - 10,450 |
| (lbs) | Payload | 39,600 - 40,300 | 56,750 - 59,440 |
| | Gross | 44,800 | 67,200 |

Figure II-8. Open Top Container

## TANK CONTAINER

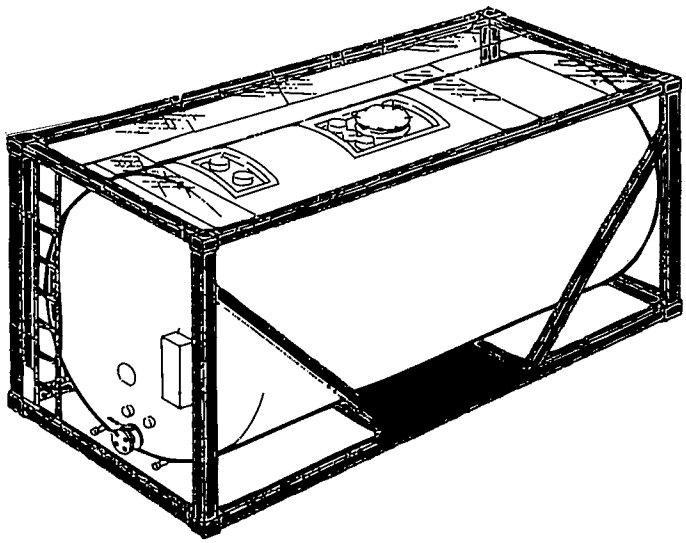

| Dimensions (inches) | | Commercial 20-foot | Commercial 40-foot |
|---|---|---|---|
| Internal | Length | 240 | 480 |
| | Width | 96 | 96 |
| | Height | 96 | 87 |
| Weight (lbs) | Tare | 7,275 | 10,300 |
| | Payload | 45,636 | 45,100 |
| | Gross | 52,911 | 55,400 |
| Capacity (gal) | | 6,605 | 13,000 |

Figure II-9. Tank Container

## HALF-HEIGHT CONTAINER

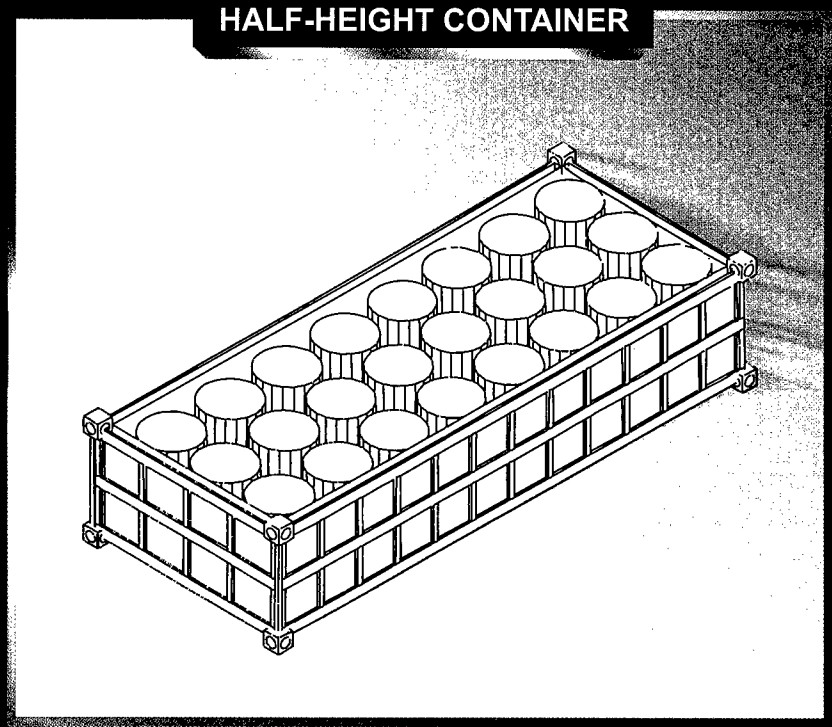

| CONTAINER TYPE | NATIONAL STOCK NUMBER |
|---|---|
| Navy Half-Height (8'x4'x20') | 8145-01-291-0937 |
| Army Half Height (8'x4'x20') | Not Assigned |

| Dimensions (inches) | | Military 20-foot | Commercial 20-foot |
|---|---|---|---|
| Internal | Length | 229.75 - 233 | 232 |
| | Width | 90.625 - 92.4 | 92 |
| | Height | 37 | 37 |
| External | Length | 238.5 | 240 |
| | Width | 96 | 96 |
| | Height | 51 | 51 |
| Weight (lbs) | Tare | 5,000 | 4,189 |
| | Payload | 39,800 | 40,611 |
| | Gross | 44,800 | 44,800 |

Figure II-10. Half-Height Container

## MILITARY QUADCON

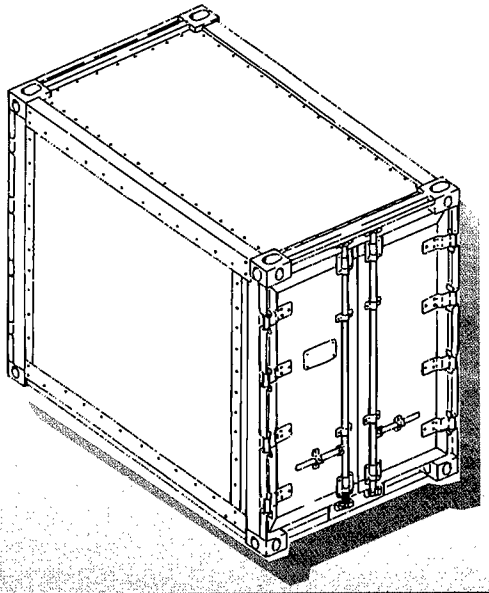

| CONTAINER TYPE | | NATIONAL STOCK NUMBER |
|---|---|---|
| Mil QUADCON (old) | | 8115-01-194-4017 |
| Mil QUADCON (new) | | 8115-01-354-0797 |
| Dimensions (inches) | | Military |
| Internal | Length | 83.8 |
| | Width | 55.6 |
| | Height | 75.3 |
| External | Length | 96 |
| | Width | 57.3 |
| | Height | 82 |
| Door | Height | 52.8 |
| Opening | Height | 70.2 |
| Weight | Tare | 1,800 |
| (lbs) | Payload | 8,200 |
| | Gross | 10,000 |

Figure II-11. Military QUADCON

**QUADCON will be certified to meet all ISO standards and CSC approvals.** Each has four-way forklift pockets and lockable double doors on each end that provide full access to the contents. To accommodate smaller items, a small item storage cabinet can be installed or removable inserts may be placed as shelves inside the QUADCON.

h. **TRICONs.** See Figure II-12. **TRICONs are not a common-use asset. They are military containers owned by the Navy and the Army. They are a lockable, watertight container of all steel construction.** TRICONs have standard ISO corner fittings and 3-way forklift pockets (side and back). The TRICON has ISO corner fittings to allow for coupling into arrays of up to three units. An array of three TRICONs has the same external length and width dimensions as a 20-foot ISO container (8' x 20') and is designed to be lifted as a 20-foot unit in ocean shipping. Two styles of containers have been procured: bulk and configured. Bulk containers do not have drawers, shelves, or rifle racks. Configured containers consist of cabinets with drawers, shelves, rifle racks, or a combination thereof.

i. **ISU-60/ISU-90.** See Figure II-13. **Internal Airlift or Helicopter Slingable Container Unit (ISU), has multiple configurations, depending upon the doors and internal dividers.** The ISU containers provide weather-resistant storage and transport but do not meet ISO structural standards. CSC restrictions do not apply to containers specially designed for air transport; however, they are certified for internal or external helicopter transport and for all Air Mobility Command (AMC) transport aircraft. A number of these units have been procured by the US Army Airborne and Air Assault units.

j. **Flatracks.** See Figure II-14. A flatrack is a structural steel frame, decked over and fitted with tie-down points, similar to a container without sides or top. Some flatracks have corner posts, others have end walls. Many corner posts and endwalls fold inward to facilitate stacking and storage. Flatracks are owned by both the Department of Defense and commercial industry. There are two basic types of flatracks, based on strength — regular and heavy duty. Regular flatracks enable containerships to transport bulky items that are slightly larger than the door dimensions of a standard ISO container, and sometimes also slightly longer than the length of standard ISO containers such as lumber, steel products, or light vehicles. The Department of Defense owns some 20' flatracks which should be used only to carry light items that do not fit into a standard 20' ISO end-closing container, and 35-footers which are to be used exclusively for the Fast Sealift Ships (FSS). Regular flatracks meeting ISO standards can readily have cargo loaded or discharged at inland sites. Regular flatracks of both 20' and 40' are also available from commercial leasing companies. Virtually all heavy duty flatracks are owned by the Department of Defense, can have end flaps installed along one side, and allow for significantly greater weights to be carried, such as armored vehicles (i.e., tanks), or other (often) oversize cargoes. If this type of flatrack is installed side-by-side in a container ship the edge flaps can span gaps between the flatracks to form a false or "'tween" deck. Heavy duty flatracks can be of the Titan variety, with collapsible (telescoping) end posts that are adjustable from 102-162 inches (from deck of flatrack) with a cargo capacity of 134,400 pounds, or of the Denardi/Phillips variety with fixed endposts of 128 inches (from deck of flatrack) and a cargo capacity of 144,000 pounds. When working with heavy duty flatracks, special attention needs to be paid to lifting capacity of available crane(s). Heavy duty flatracks are primarily intended for shipborne transportation but can, with special consideration, be used intermodally at distant inland sites.

k. **Load and Roll Pallet (LRP).** See Figure II-15. The LRP is a DOD asset. **It is**

## MILITARY TRICON

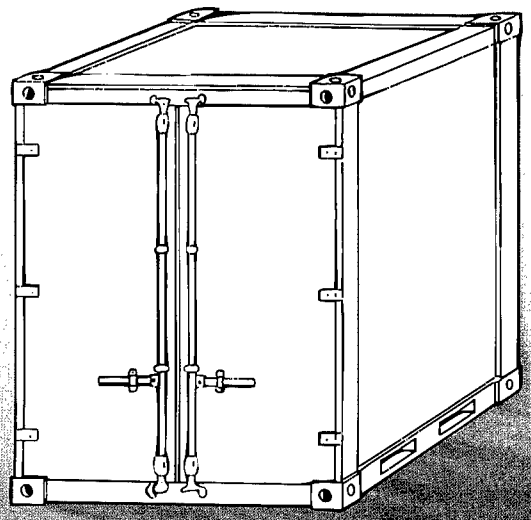

| CONTAINER TYPE | NATIONAL STOCK NUMBER |
|---|---|
| Military TRICON | 8145-01-287-3294 |

| Dimensions (inches) | | Military Individual Unit | Military Configured Set |
|---|---|---|---|
| Internal | Length | 70 | 231 - 233 |
| | Width | 90.5 | 91 - 93 |
| | Height | 86.5 | 88 - 95 |
| External | Length | 77.5 | 239 |
| | Width | 96 | 96 |
| | Height | 96 | 96 - 102 |
| Door | Width | 71.5 | 92 - 98 |
| Opening | Height | 84.4 | 82 - 90 |
| Weight | Tare | 2,560 | 7,310 |
| (lbs) | Payload | 12,340 | 7,590 |
| | Gross | 14,900 | 14,900 |

Figure II-12. Military TRICON

## INTERNAL AIRLIFT OR HELICOPTER SLINGABLE CONTAINER UNITS (ISU)

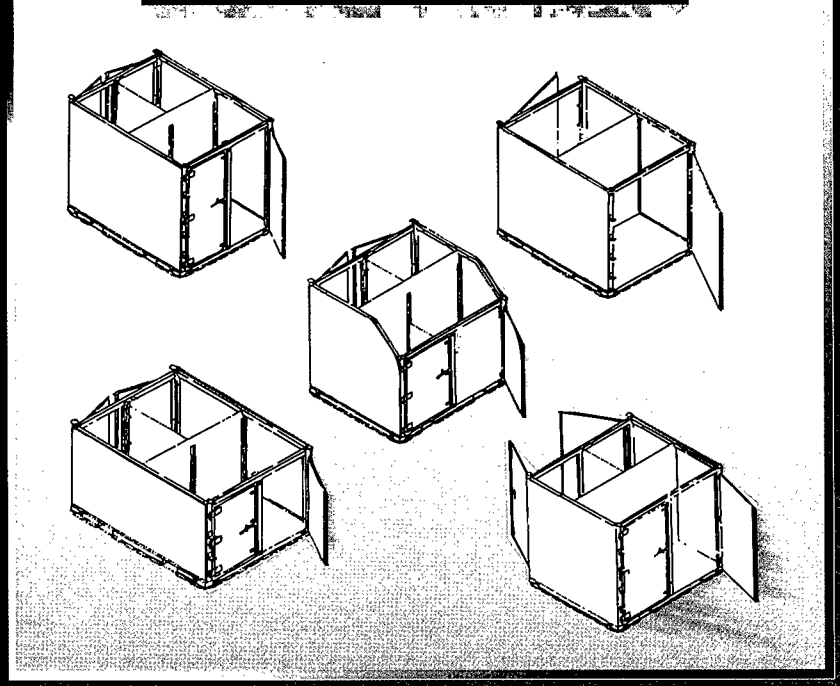

| Dimensions (inches) | | Military ISU-60 | Military ISU-90 |
|---|---|---|---|
| Internal | Length | 97.5 | 100.28 |
| | Width | 77.5 | 77.5 |
| | Height | 53.59 | 83.59 |
| External | Length | 108 | 108 |
| | Width | 88 | 88 |
| | Height | 60 | 90 |
| Door | Width | 33.75 - 43.75 | 33.75 - 73.5 |
| Opening | Height | 50.59 | 80.59 |
| Weight | Tare | 1,450 - 1,500 | 1,740 - 1,900 |
| (lbs) | Payload | 5,000 - 10,000 | 10,000 |

Figure II-13. Internal Airlift or Helicopter Slingable Container Units (ISU)

## FLATRACKS

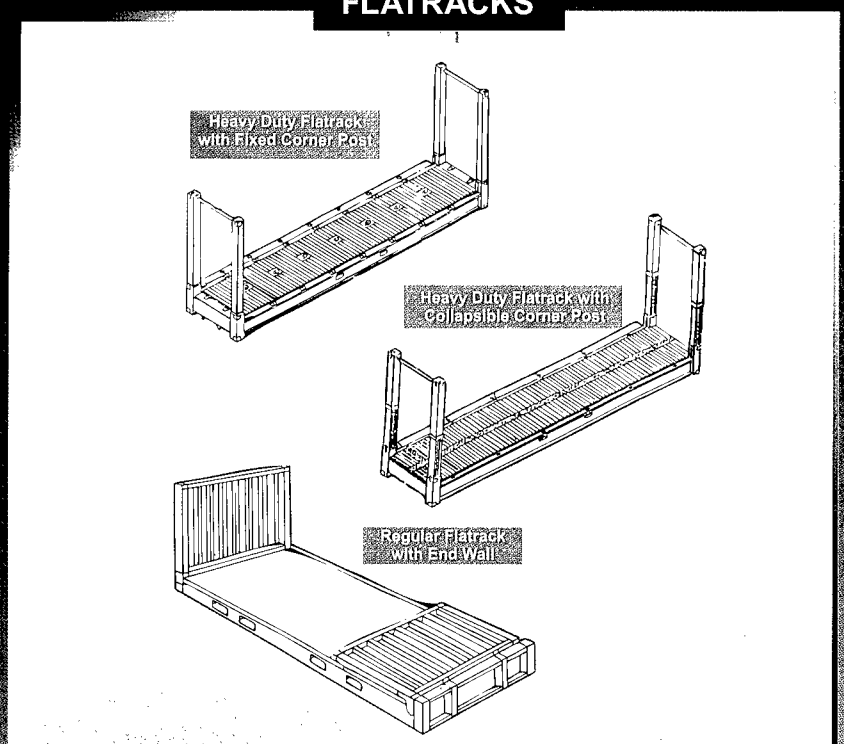


| CONTAINER TYPE | NATIONAL STOCK NUMBER |
|---|---|
| Navy | 8145-01-290-7335 |
| Army | Not Assigned |
| 40' Heavy Duty | 0910-LP-248-8600 |

| Dimensions (inches) | | Military 20-foot | Military 40-foot | Commercial 20-foot | Commercial 40-foot |
|---|---|---|---|---|---|
| Internal | Length | 234 | 456 | 217 - 233 | 460 - 464 |
| | Width | 94 | 96 | 80 - 92 | 88 - 96 |
| | Height | 88.1 | 102 - 162 | 82 - 92 | 76 - 86 |
| External | Length | 240 | 480 | 239 - 240 | 480 |
| | Width | 96 | 96 | 96 | 96 |
| | Height | 96 | 132 - 186 | 102 | 102 - 108 |
| Deck | Height | 7.9 | 30 | 10 - 20 | 24 -26 |
| Weight (lbs) | Tare | 6,500 | 22,000 | 4,900 - 6,516 | 10,042 - 11,903 |
| | Payload | 38,300 | 144,000 | 38,540 - 59,990 | 55,840 - 89,170 |
| | Gross | 44,800 | 166,000 | 44,800 - 66,140 | 67,200 - 99,200 |

Figure II-14. Flatracks

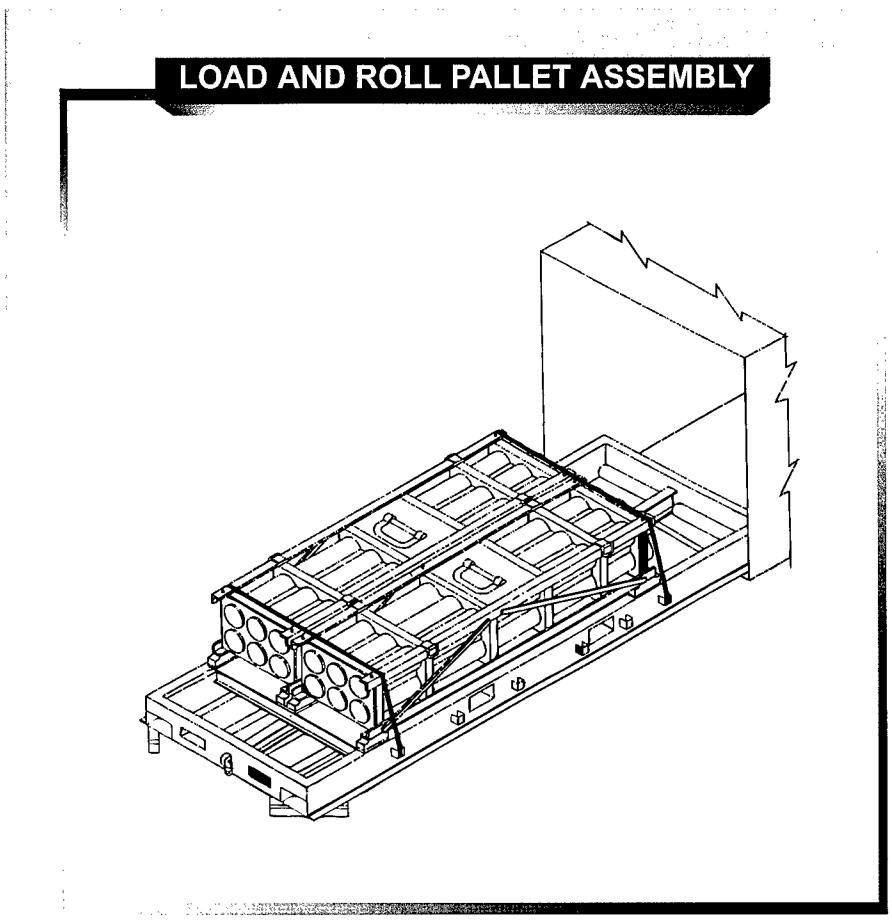


**Figure II-15. Load and Roll Pallet Assembly**

**a steel frame platform with rollers that fits inside a standard 20-foot ANSI/ISO container.** The LRP allows forward units to rapidly extract a complete load of four Multiple Launch Rocket System (MLRS) pods (each weighing 5,078 pounds) or four Army Tactical Missile System (ATACMS) pods from an end opening container. Either two 6,000-pound capacity or larger forklifts, a tactical cargo vehicle with a winch, or a wrecker lifts up one end of the fully loaded LRP just high enough to clear the floor of the container and roll the entire load into and/or out of the container. Once outside of the container, the load is fully accessible from the sides to allow rapid unloading of the cargo. The LRP unit measures 222" x 89" x 120" and has a tare weight of 1,970 lbs. Army Materiel Command (AMC) procedural drawing 19-48-8184 depicts use of the LRP for outloading of MLRS pods, and AMC procedural drawing 19-48-8198 depicts use of the LRP for outloading of ATACMS pods. There are approximately 500 units controlled by MTMC in the DOD inventory.

## 12. Types of Container Handling Equipment

a. **A wide variety of military and commercial container handling equipment exists.** Figures II-16 through II-21 show

military unit-owned container handling equipment. Because of the variance, an all-inclusive list of commercial container handling equipment is beyond the scope of this document. Commercial container handling equipment, such as top picks, side picks, and straddle carriers are generally available for lease through a port facility.

b. **Military container handling equipment is generally capable of handling only 20-foot or 40-foot containers.** The capability to handle 20-foot containers is usually most critical in the early stages of a contingency. Since most containers longer than 40-feet (45 feet and 48 feet) have ISO corner fittings at the 40-foot point, they can usually be handled by the 40-foot container handling equipment. Military doctrine calls for the extensive use of 20-foot containers. Consequently, a large volume of 40-foot containers could negatively impact operations at some container handling sites. Smaller containers (e.g., QUADCONs, TRICONs) can also be handled by military container handling equipment if configured into a 20-foot ISO unit.

c. **Rough Terrain Container Crane (RTCC).** See Figure II-16. **The RTCC is a wheel-mounted crane available through commercial sources.** The RTCC is capable of lifting a fully loaded 20-foot container (max weight of 44,800 pounds) at a radius of 27 feet and a 35/40-foot container weighing 67,200 pounds at a radius of 22 feet. US Army general support (GS) ammunition units use the RTCC "from a fixed position" for transfer of 20-foot ANSI/ISO containers from one mode of transportation to another or to ground or load containers to and from waiting transportation in the Theater and Corps ammunition storage areas. US Army transportation units use the crane to augment the 50,000-Pound Rough Terrain Container Handler (see subparagraph 12e.) in the transfer and handling of 20-foot, 35-foot, or 40-foot containers and other cargo between transportation modes and in storage areas. The RTCC can be operated on hard surfaces, or on soft surfaces with wooden platform sections to carry the weight.

d. **Intermodal Container Handling Spreader Bars.** See Figure II-17. **Spreader bars are connected by slings to the hook of a crane** such as a RTCC or the 140-Ton Truck-Mounted Container Handling Crane **and are used to handle ISO and other intermodal containers**. The Army has two types of spreader bars. One type is for handling 20-foot long containers and the other is for handling 40-foot long containers. The 40-foot spreader bars can also handle many longer containers since they usually have ISO corner-fittings at the 40-foot point. Both spreader bar types conform to Military Specification MIL-S-52713. Both types are of fixed frame design and have manually locking twist locks. Either adjustable spreader bars or specific 35-foot spreader bars are required for lifting 35-foot containers. (A spreader bar is required for all cranes.)

e. **50,000-Pound Rough Terrain Container Handler (RTCH) and Top Handler.** See Figure II-18. **The RTCH provides a capability of handling the 8-foot wide family of 20-foot, 35-foot, and 40-foot long containers with gross weights of up to 50,000 pounds over improved or unimproved terrain.** (It can also handle many longer containers, since they are usually configured with ISO fittings at the 40-foot point; a separate fork kit is also required to lift half-height containers.) It is a rough terrain truck designed for operating on soft soil conditions such as unprepared beaches. The RTCH is four-wheel drive and capable of fording in up to five feet of seawater. The tines can be lowered to only several feet above the surface. The RTCH is a modified commercial design, procured to military specifications. Top handlers must be used in conjunction with the RTCH to handle ISO containers. Top handler units (20-foot, 35-

## ROUGH TERRAIN CONTAINER CRANE

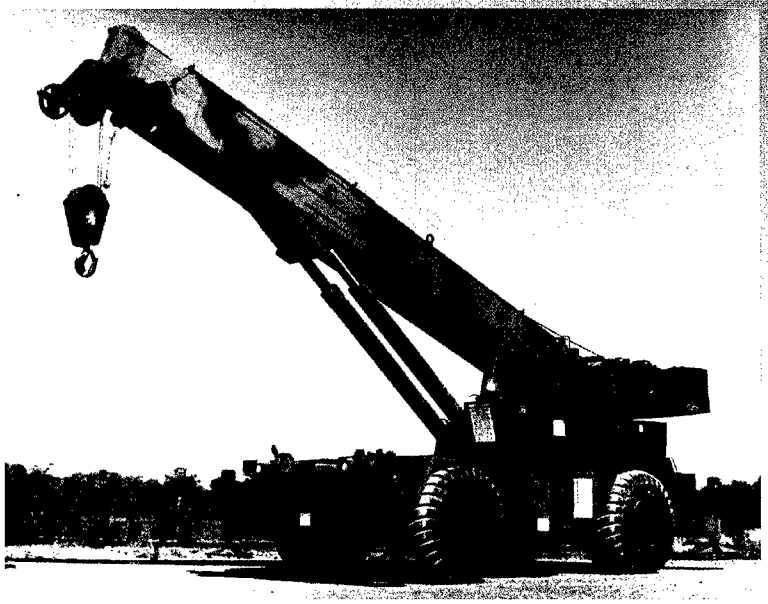

| NATIONAL STOCK NUMBER | 2810-01-205-2716 |
|---|---|
| Capacity | 44,800 pounds at 27- foot |
| Length (inches) | 548 |
| Width (inches) | 145 |
| Height (inches) | 153 |
| Weight (lbs) | 108,750 |

Figure II-16. Rough Terrain Container Crane

## SPREADER BARS

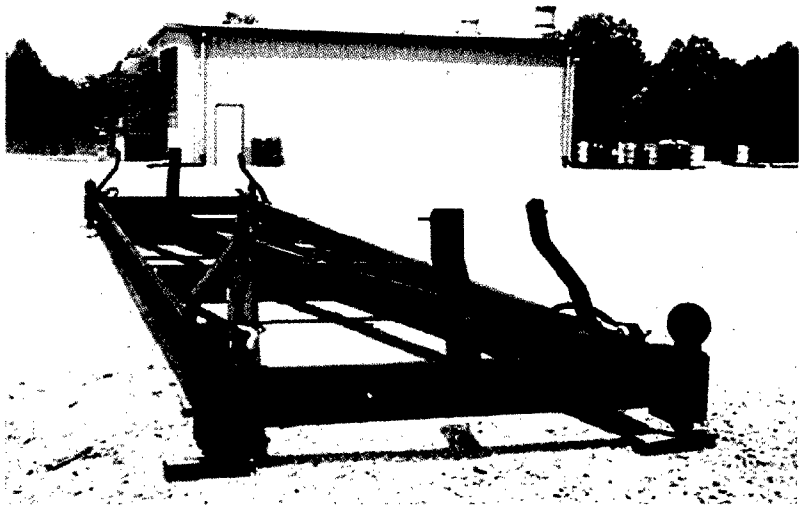

| SPECIFICATION | 20 - FOOT | 40 - FOOT |
|---|---|---|
| Capacity (lbs) | 44,800 | 67,200 |
| Length (inches) | 238 | 480 |
| Width (inches) | 95 | 95 |
| Height (inches) | 18 | 18 |
| Weight (lbs) | 3000 | 5000 |
| National Stock Number | 3990-01-258-2010 | 3990-01-258-2011 |

Figure II-17. Spreader Bars

## ROUGH TERRAIN CONTAINER HANDLER AND TOP HANDLER

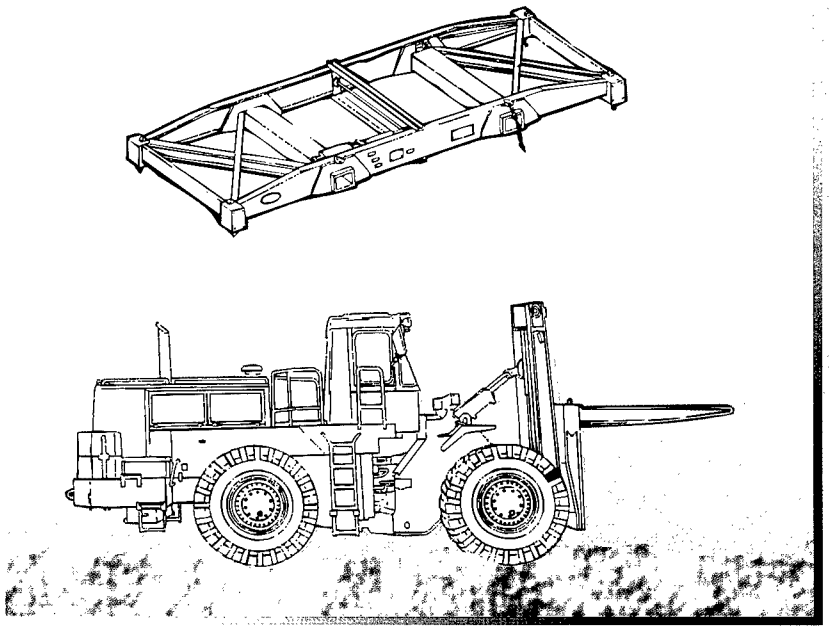

| | |
|---|---|
| National Stock Number Rough Terrain Container Handler (Army / Marine Corps) | 3930-01-082-3758 |
| National Stock Number Rough Terrain Container Handler (Air Force) | 3930-01-307-3658CT |
| Capacity (lbs) | 50,000 @ 48" load center |
| Length w/ Forks (inches) | 420 |
| Width (inches) | 138 |
| Height (inches) | 167 |
| Weight w/o Top Handler (lbs) | 103,000 |
| Top Handler Part No. (20- / 40-foot) | E9137 / E9140 |
| Top Handler Weight (lbs) (20- / 40-foot) | 3,800 / 9,927 |

Figure II-18. Rough Terrain Container Handler and Top Handler

foot, or 40-foot) are placed on the forks of the RTCH to allow for handling the three different lengths of ISO containers. The tines of the RTCH fit into forklift pockets in the top handler. Then the top handler connects to the top of a container at the ISO corner fittings. The Army has all three lengths of top handlers, while the Marine Corps has only 20-foot units.

f. **140-Ton, Truck-Mounted, Container Handling Crane.** See Figure II-19. **The 140-ton crane is a commercially designed crane used by the Army.** It is truck-mounted and has 140-ton maximum capacity at a reach of 12 feet. It has an 8-foot x 4-foot truck chassis and a 50-foot basic boom, which can be extended in length up to 130 feet with the use of various lengths of lattice boom. The crane is used for loading and unloading containers from ships in a fixed port operation or watercraft and/or lighterage in a logistics over-the-shore (LOTS) operation and for handling containers in marshalling areas and terminal sites. In a LOTS operation, the 140-ton crane may be used to lift cargoes of all types from the ocean-going ship to the lighterage and/or watercraft and on the beach to transfer these cargoes from lighterage to the beachhead. The 140-ton crane may be placed on an elevated causeway of a floating causeway to discharge cargoes from the watercraft. If operating on a beach, wooden platform sections are necessary to ensure that the crane does not sink into the sand. The crane must be partially disassembled for transport.

g. **20-/40-Foot Container Sideloader.** See Figure II-20. **This diesel-powered container sideloader is capable of transferring or self-loading and transporting 20-foot through 40-foot ISO containers or tactical shelters.** Maximum lifting capability is 66,150 pounds. **The unit has a telescoping spreader bar** for 20-foot, 35-foot, and 40-foot length containers, and can also lift containers with slings. The sideloader can transport containers within maximum road height limitations. It also has an air ride suspension enabling it to transport ISO containers containing delicate equipment. The sideloader is self-deployable by road but should be pulled by a 26-ton tractor for long distances. It is air transportable by C-5 and C-17 aircraft. The Army has 20-foot containers, 44,800 pound capacity sideloaders (no national stock number [NSN] assigned), and the Air Force has sideloaders capable of handling both 20-foot and 40-foot units (NSN: 3810-01-228-0190CT).

h. **14-Ton, Wheel-Mounted ISO Container Handling Crane.** See Figure II-21. This crane is owned by the Navy and can be purchased through commercial sources. **Under field conditions it can handle 20-foot ISO containers with a 25,000 pound maximum gross weight for loading and off-loading trucks and/or trailers.** Powered by hydrostatic drive to the front wheels, it provides a self-propelled speed of 5-MPH and a maximum towed speed of 5-MPH. The crane is air transportable in C-130 aircraft. NSN: 3810-01-198-0079.

i. **Container Lifting Semitrailers. The Container Lifting Semitrailer is a U-shaped transporter which is capable of lifting a 20-foot long ISO container up from the ground and moving it to another location.** The Department of Defense owns a few of the Container Lifting Semitrailers. It has guide wheels to protect the container from damage as the trailer is backed around it prior to loading. It is designed for use at improved facilities, those with hard surfaces. Quick connect couplings are attached to the lifting cables to allow for ease in lifting a container by the lower corner fittings. The container is lifted using hydraulics on the semitrailer which raises the entire frame of the semitrailer. The prime mover for the semitrailer, including hydraulics, is a specialized 4 x 2 yard tractor with a hydraulic-lift fifth wheel. (NSN not assigned).

## 140-TON, TRUCK-MOUNTED CONTAINER HANDLING CRANE

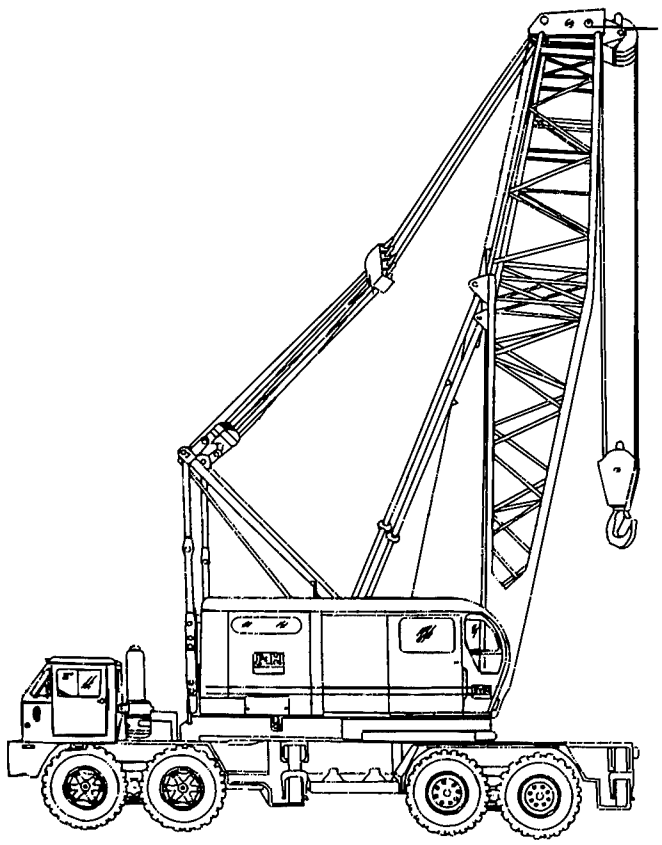

| | |
|---|---|
| Capacity (Tons) | 140 @ 12 feet |
| Length w/ 50 foot boom (inches) | 873 |
| Width (inches) | 132.5 |
| Height (inches) | 157.8 |
| Weight w/ 50 foot boom (lbs) | 195,000 |
| National Stock Number | 3950-01-027-9254<br>3950-01-110-9224 |

Figure II-19. 140-Ton, Truck-Mounted Container Handling Crane

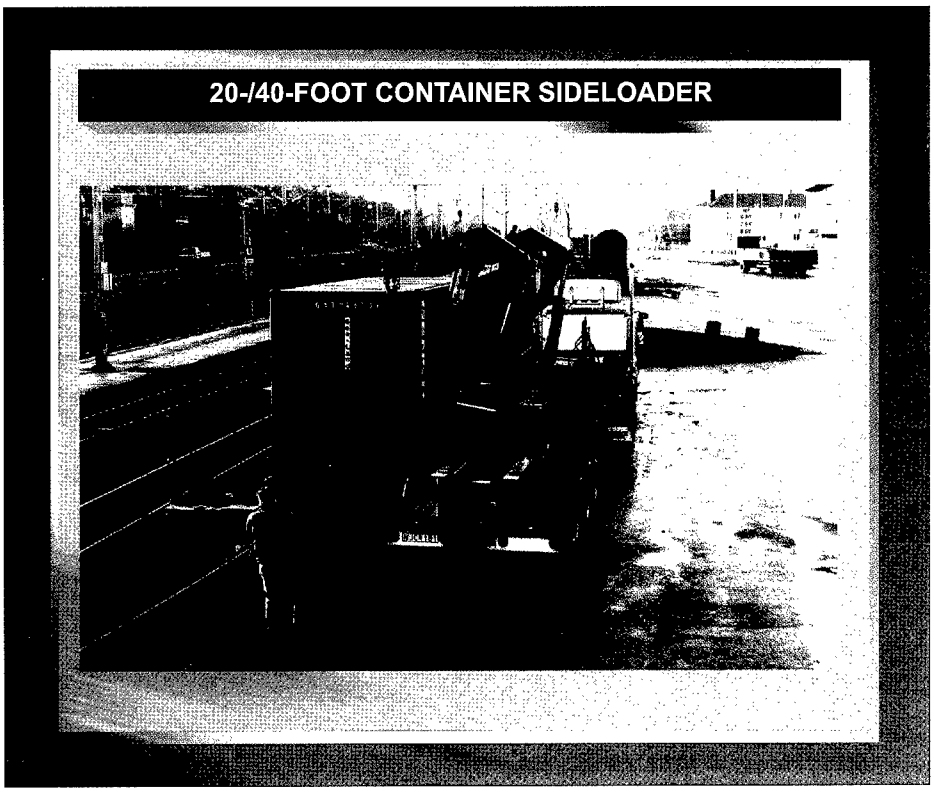


Figure II-20. 20-/40-Foot Container Sideloader

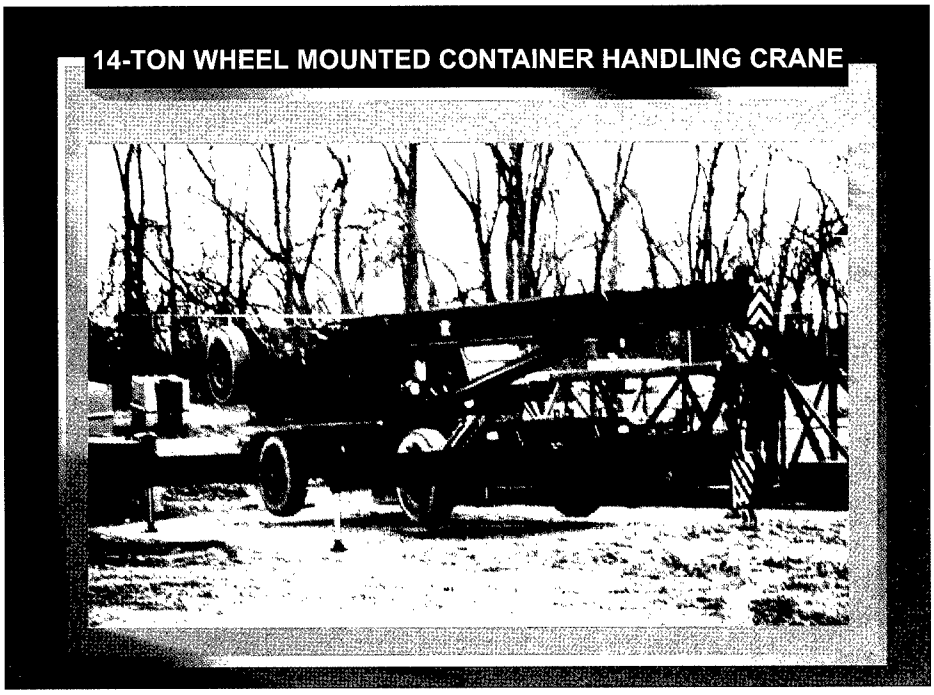


Figure II-21. 14-Ton Wheel Mounted Container Handling Crane

## SECTION C. SPECIAL PURPOSE/TACTICAL SHELTERS

### 13. Special Purpose Mobile Shelters and Facilities

Special purpose tactical shelters fall in two major categories; ISO shelters and mobile facilities. The first are developed by the US Army and the latter by the US Navy. Both have similar handling characteristics, with the ISO shelter carrying a maximum payload of 11,100 pounds depending on the type of shelter. They come in three basic models; non-expandable, one-side expandable, and two-side expandable. In contrast to the mobile facilities, the ISO shelters can move via rail car and do not require air ride trailers for road movement.

### 14. Naval Mobile Facility Program

The **Naval Air Systems Command (NAVAIR)** is the DOD-appointed Principle Control Activity for the Mobile Facility (MF) Shelter System for all of the Department of Defense. A Program Manager (PM) is assigned within NAVAIR's Fleet Support and Management Division, code AIR 3.6.4.1, to establish policies, procedures, and to develop and execute an overall MF program. These responsibilities are delineated in NAVAIR Instruction 13670.1 (Series). A principle goal of the program is to provide tactical shelters to Navy and Marine Corps aviation activities for aircraft logistics support. Navy and/or Marine Corps activities are under the sponsorship of the Chief of Naval Operations, Aviation Maintenance Program Branch (N881). A Joint Committee on Tactical Shelters meets periodically with representatives from all Services to provide the PM with updated information on each Service's requirements.

### 15. Mobile Facility Program Equipment

**MF program equipment includes tactical shelters and major related equipment essential to tactical and garrison operations.** All MF shelter types have nominal exterior dimensions of 8 feet wide, 8 feet high, and 20 feet long with removable skids removed. MFs meet ANSI/ISO standards for shipping containers and have ISO corners. The environmental control and any other external extrusion outside the ISO envelope are stored inside when transported.

### 16. Purpose

**Mobile facilities provide capability for rapid deployment of operational and logistic resources to any theater worldwide.** Functions are pre-containerized to allow for ease of deployment, transport, and employment in the tactical area, and return of valuable resources when the operation has been completed. In addition to Navy and Marine Corps aviation support, **MFs are used throughout the Department of Defense** for medical treatment (i.e., deployable medical facilities), training, Air Force Intermediate Shops, metrology, meteorology, photo processing, and pierside support of Navy ships.

### 17. Scope

**The current and projected population of MFs subject to potential movement through the transportation system include those under the control of NAVAIR MF program management, units under control of Navy and/or Marine Corps fleet units, and those owned by other DOD agencies.** New MF shells are delivered from the manufacturer to a NAVAIR controlled industrial activity for configuration. This involves adding electrical, mechanical, and

environmental equipment to customize the MF for a particular military use. The configured MF is delivered to the user. **NAVAIR budgets for these first- and second-destination moves. After delivery to the end user, control and costs become the responsibility of the using command.** Figure II-22 contains current and projected quantities of MFs in use through FY-2000.

## 18. Transportation

**Surface** transportation is the **normal** mode of transportation for MFs to and from overseas. **Air** transportation is used to and from overseas only for those MFs containing sensitive equipment or when operational conditions require **urgent** delivery. MFs are transported by common-user surface lift (or air) of opportunity whenever available or, if necessary to meet operational requirements, the aviation logistic support ships. Normal mode of transport within CONUS is commercial or tactical motor transportation (truck). Because of the sensitivity of loaded test equipment, some MFs require movement by trailers with air ride suspension. **Rail** transportation is **not** authorized for shipment of MFs because configuration items are not engineered to withstand the stress of the "Hump Test."

## 19. Mobile Facility Data (USN/USMC)

a. **Basic Mobile Facility Type A.** See Figure II-23. Features include two removable end doors and removable panel on one side for environmental control. Power entry and power transfer panels are installed with 120/208 volt, 3 phase, 100 amp connectors for both 60 Hz and 400 Hz service. Gross weight of 20,000 lbs includes tare weight of 5,235 lbs for a pre-loaded capacity of 14,765 lbs.

b. **Basic Mobile Facility Type B.** See Figure II-23. Features include two removable end doors and a removable panel on one side for an environmental control unit (ECU) installation. Power entry and power transfer panels are installed with 120/208 volt, 3 phase, 100 amp connectors for both 60 Hz and 400 Hz service. Gross weight of 20,000 lbs includes tare weight of 5,235 lbs for a pre-loaded capacity of 14,765 lbs.

c. **Integration Unit (INU) Mobile Facility.** See Figure II-24. Features include two removable end doors and a panel on one side for window type ECU installation. There are three removable door-size side panels (two on one side and one on the other) which allow complexing of other shelters. Three 120/208

**PROJECTED DOD-WIDE MF INVENTORY (NOMINAL)**

| | MF QUANTITY | | | | |
|---|---|---|---|---|---|
| AGENCY | CURRENT | FY-94 | FY-95 | FY-96 | FY-97 |
| Navy/Marine Aviation | 4849 | 4994 | 5139 | 5284 | 5429 |
| Other Navy | 350 | 358 | 358 | 358 | 358 |
| Other DOD | 758 | 758 | 758 | 758 | 758 |
| Total | 5957 | 5610 | 6255 | 6400 | 6545 |

**Figure II-22. Projected DOD-Wide MF Inventory (Nominal)**

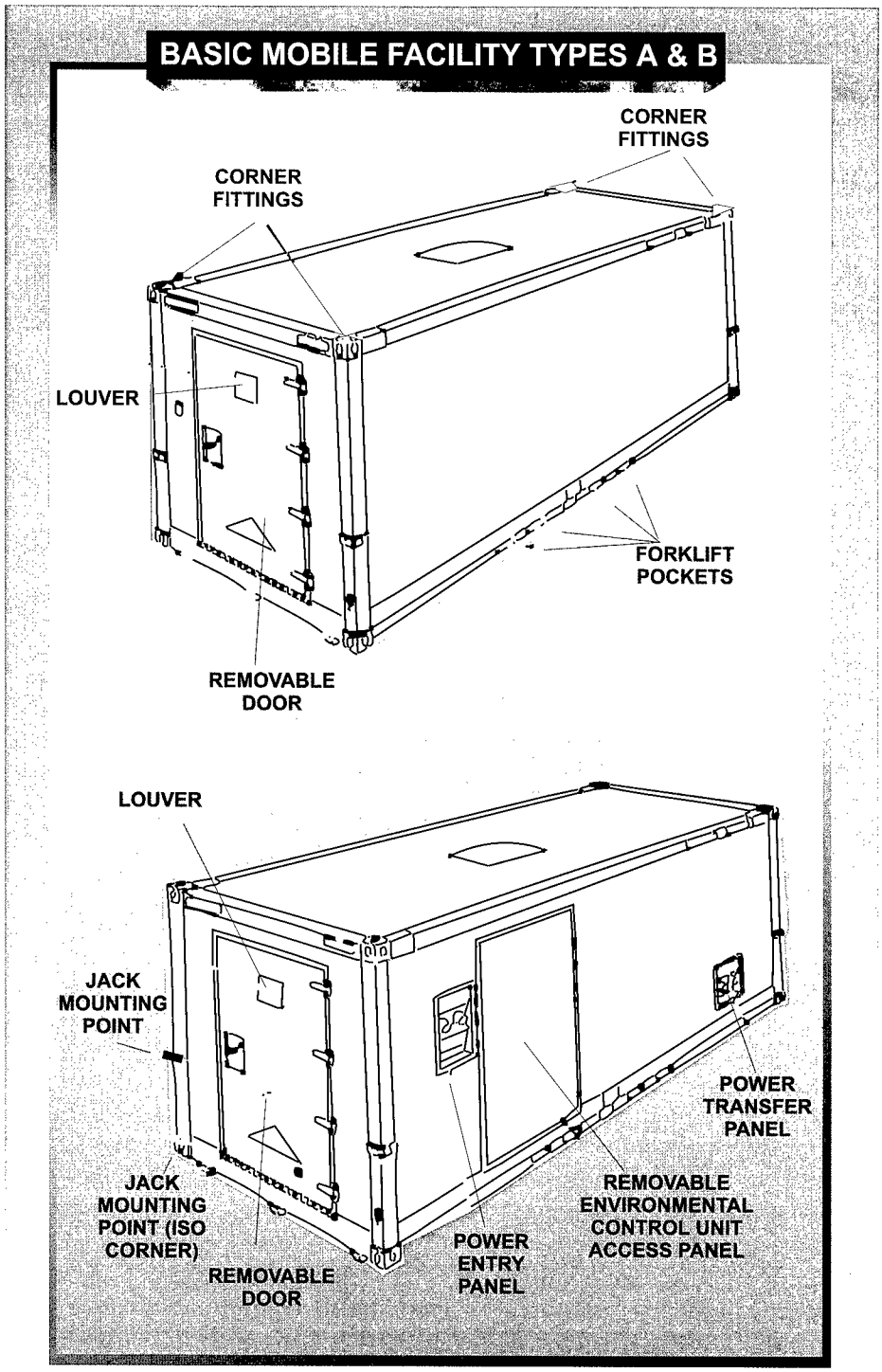


Figure II-23. Basic Mobile Facility Types A & B

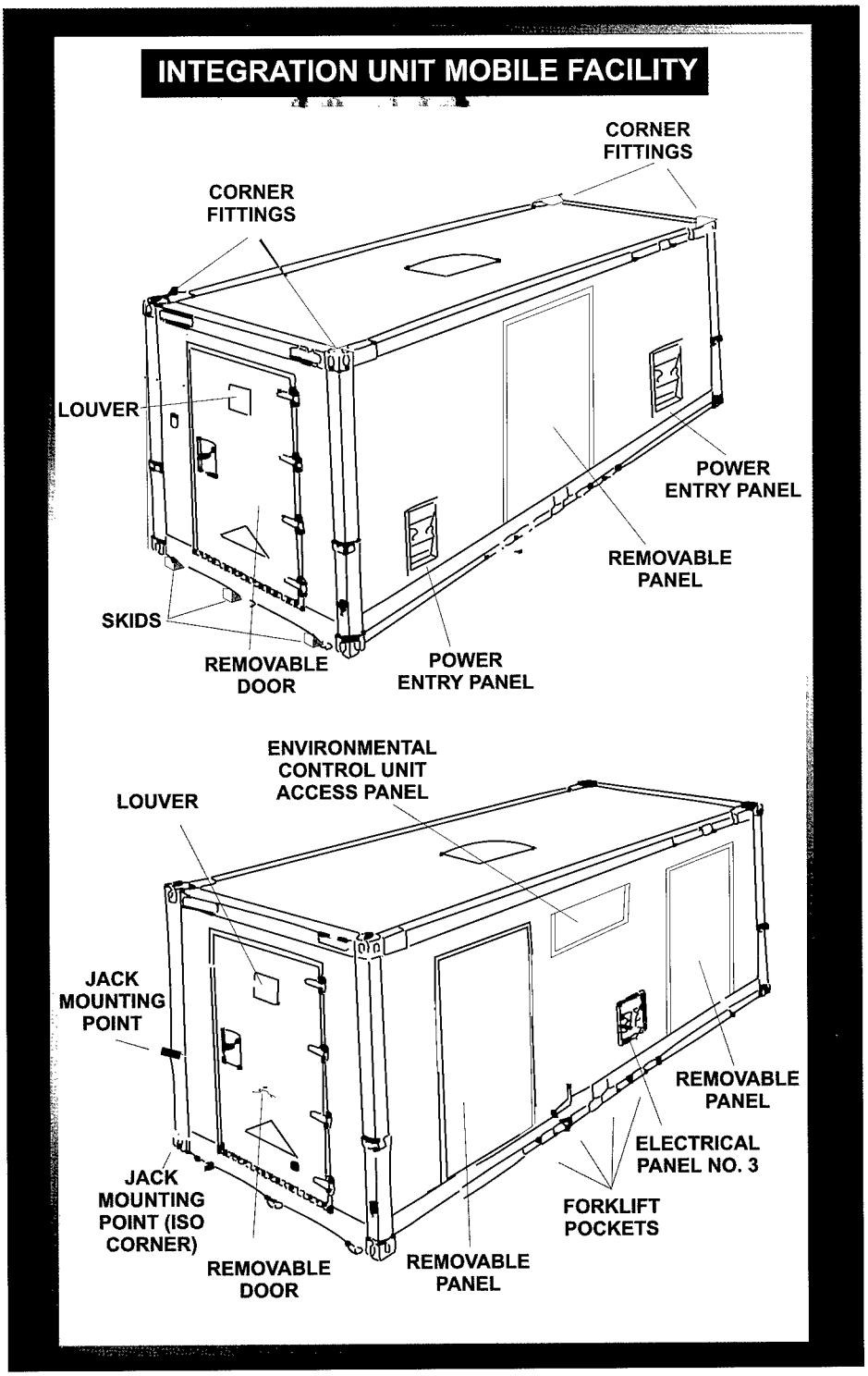


Figure II-24. Integration Unit Mobile Facility

volt, 3 phase, 60 Hz, and 400 Hz power transfer boxes, with appropriate connectors, provide the capability to connect input power and to transfer power to another INU and up to six complexed shelters. Gross weight of 20,000 lbs includes tare weight of 5,235 lbs for a pre-loaded capacity of 14,135 lbs.

d. **Side-Opening Mobile Facility Type A.** See Figure II-25. Features include one completely removable sidewall to allow joining with other side-opening shelters, two removable end doors and two removable side panels for ECU installation. Power entry and transfer panel and power distribution and monitor panel requirements are determined and installed at time of configuration. Gross weight of 20,000 lbs includes tare weight of 5,235 lbs for a pre-loaded capacity of 14,765 lbs.

e. **Side-Opening Mobile Facility Type B.** See Figure II-26. Features include one completely removable sidewall to allow side-to-side joining with other side-opening shelters, one non-removable personnel access side door and two removable side panels for ECU installation. Power entry and transfer panel and power distribution and monitor panel requirements are determined and installed at the time of configuration. Gross weight of 20,000 lbs includes tare weight of 5,235 lbs for a pre-loaded capacity of 14,765 lbs.

f. **Side-Opening Mobile Facility Type B, Modified.** See Figure II-27. This MF is identical to the side-opening MF Type B except that a double door (80 inches wide) has been added to one end. Features include one completely removable sidewall to allow side-to-side joining with other side-opening shelters, one non-removable personnel access side door and two removable side panels for ECU installation. Power entry and transfer panel and power distribution and monitor panel requirements are determined and installed at time of configuration. Gross weight of 20,000 lbs includes tare weight of 5,285 lbs for a pre-loaded capacity of 14,765 lbs.

g. **Side-Opening Mobile Facility Type C.** See Figure II-28. Features include two completely removable sidewalls to allow joining with other side-opening shelters on either or both sides, and one removable end door. The shelter has no provision for power distribution or ECU equipment. Gross weight of 20,000 lbs includes tare weight of 5,235 lbs for a pre-loaded capacity of 14,765 lbs.

## 20. MF Ancillary Equipment

Major ancillary equipment often shipped along with, but external to operational MFs, includes generators and Dolly Sets (mobilizers) such as those listed in Figure II-29. A set of Dollies is shown in Figure II-30.

## 21. Transportation of Mobile Facilities

**Most local transportation is accomplished by using Dolly sets, MHE, or caster jacks.**

a. The **Joint Service dolly set**, specifically designed to transport ISO shelters, consists of front and rear dollies and connects to shelter ISO corners with corner-locking devices. The shelter is lifted by the dolly hydraulics system, which lifts both shelter ends at the same time. The dolly set provides Type V mobility for shelters with gross weights below 15,000 lbs and Type III mobility for shelters with gross weight of 20,000 lbs. The dolly set is designed to be towed by any approved prime mover equipped with a pintle hook. Dolly sets are used to move MFs within an air base or in support of short distance moves and/or relocations.

b. A **fork lift or RTCH** is commonly used for off-loading MF and for local movement. Figure II-31 illustrates using a fork lift for unloading. A fork lift used to move MFs must have a minimum capacity of 22,000 lbs with 48-inch load center or greater.

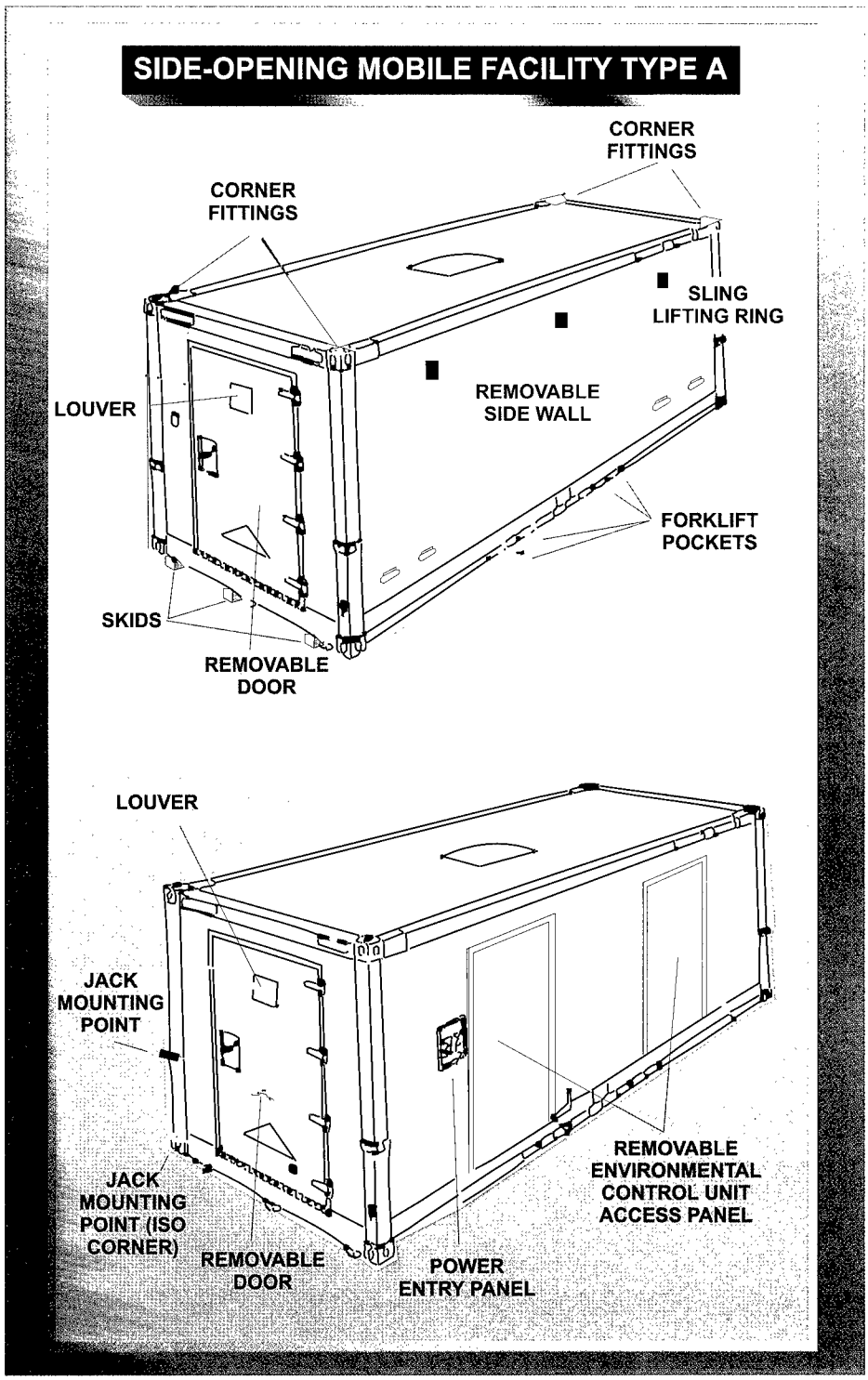


**Figure II-25. Side-Opening Mobile Facility Type A**

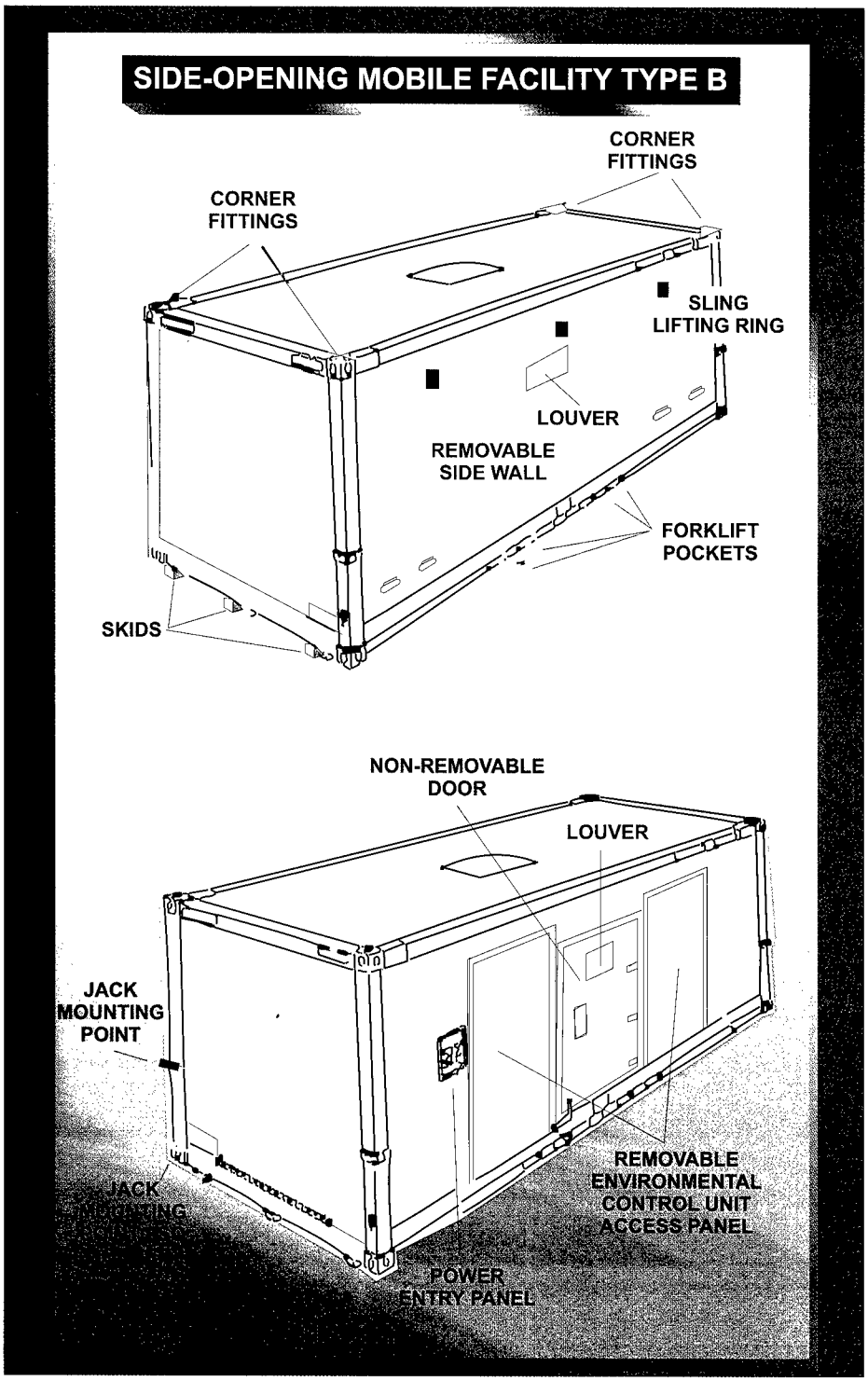


Figure II-26. Side-Opening Mobile Facility Type B

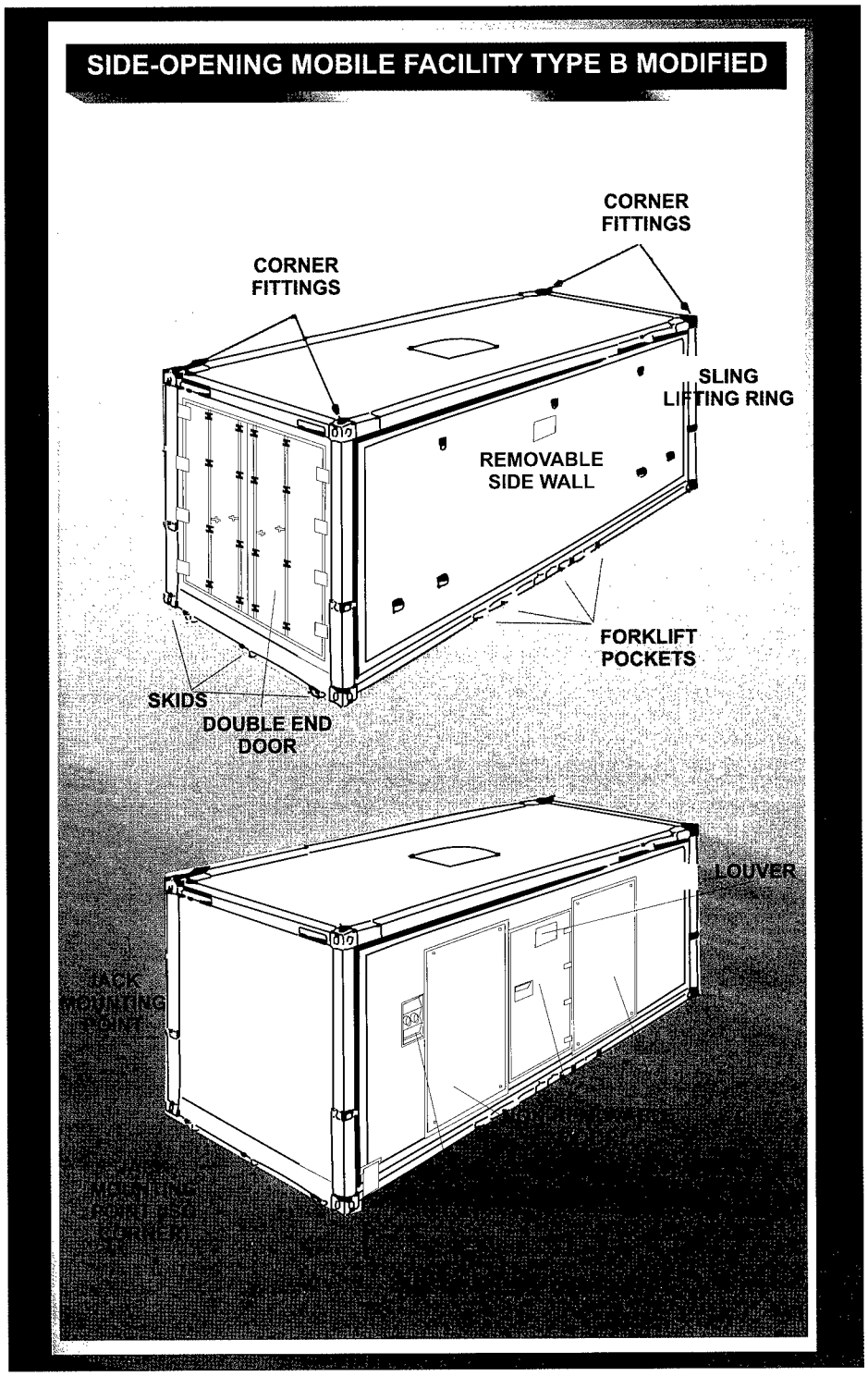


Figure II-27. Side-Opening Mobile Facility Type B Modified

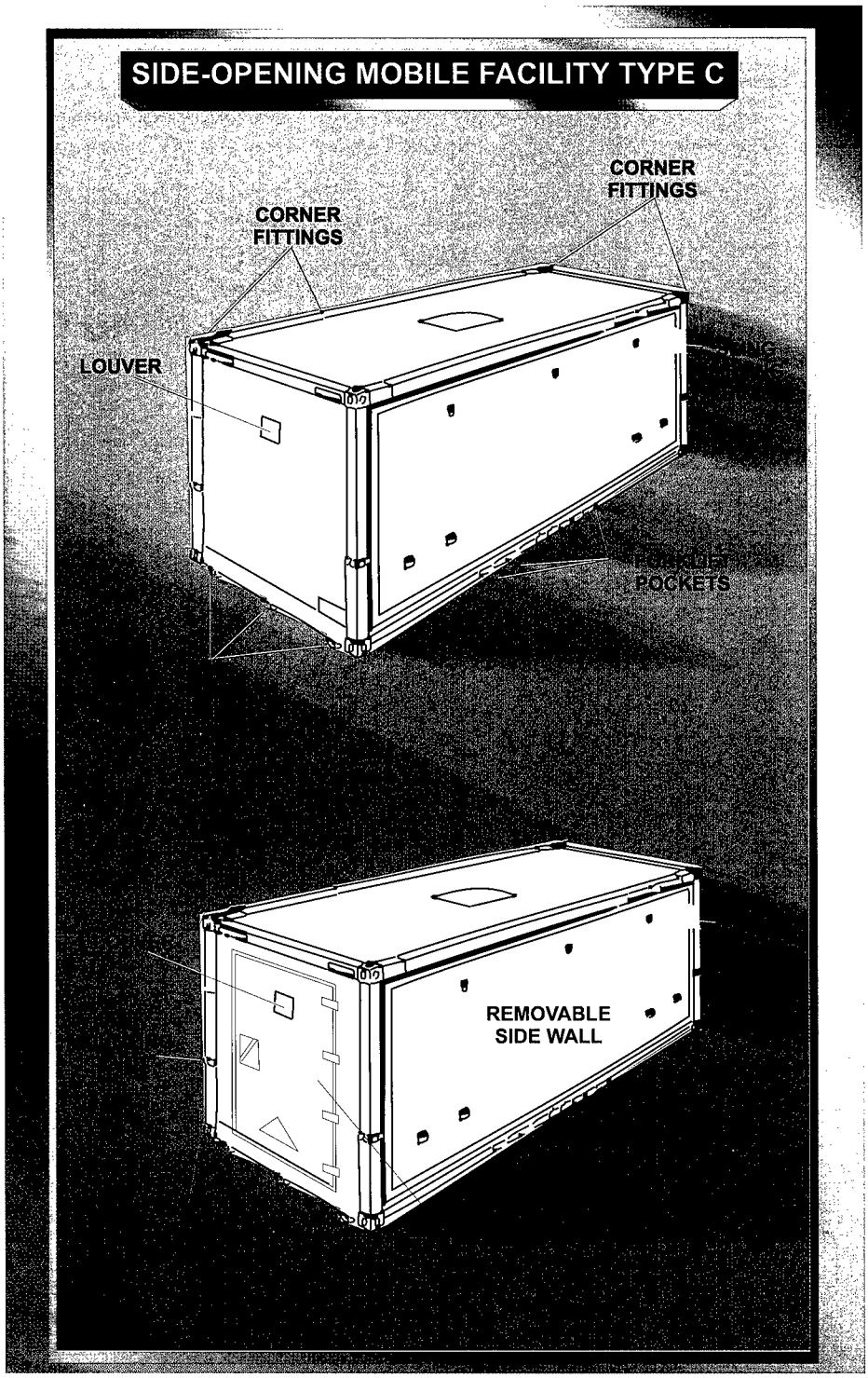


Figure II-28. Side-Opening Mobile Facility Type C

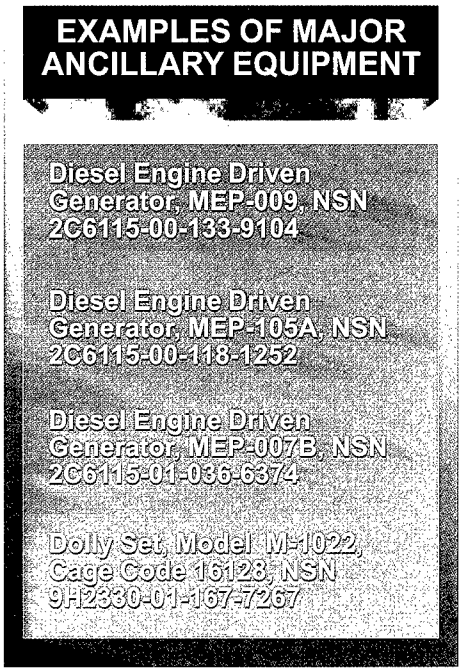


**Figure II-29. Examples of Major Ancillary Equipment**

c. Usage of **caster jacks** is shown in Figure II-32.

## 22. Line Haul and Strategic Transportation

CONUS and theater line haul transportation are accomplished by **air ride trailers**, and strategic transportation by **ships and aircraft**. Rail shipment of MFs is **not** authorized.

a. **When using ground transportation, only trailers with air ride suspension should be used to move MFs** to protect sensitive test components. A 40-foot air ride flatbed can normally transport two MF units. Figure II-33 illustrates unloading an MF from an air ride trailer using a sling and crane. (Note: Figure II-33 does **not** currently picture use of a spreader bar, which is mandatory.)

b. MFs, with skids removed, are compatible with containership cells and securing devices.

c. **MF shipment by air may be accomplished on many types of military aircraft.** The following types of aircraft are capable of transporting MF in the quantities indicated:

| Aircraft Type | Maximum Capacity MFs |
|---|---|
| C-5 | 10 |
| C-141 | 4 |
| C-130 | 2 |
| C-17 | 3 |

Figures II-34 and II-35 show pallet and tie-down arrangements common to air shipment.

## 23. Mobility Requirements

**Mobility requirements concern the planning and preparation prior to MF shipment.** Aircraft cargo load planning requires center-of-balance marking and weight to be specified for each MF. Each shelter is placed on a two pallet train containing two 463L/HCU-6E pallets (Figure II-36). Standard mobility forms and lists required are the special handling and/or hazardous cargo form, load list, and packing list. In addition, the following must be arranged:

a. All equipment and/or material must be secured prior to airlift.

b. Installed equipment must meet the restraint criteria of MIL-A-8421.

c. Stowed equipment must be prepared for shipment (i.e., packed, marked, labeled, and certified) according to AFJMAN 24-204 and MIL-STD-129. Restrain stowed items within the container according to MIL-A-8421.

d. Air transportation personnel must have access to the contents of all containers for inspection prior to loading aboard the aircraft.

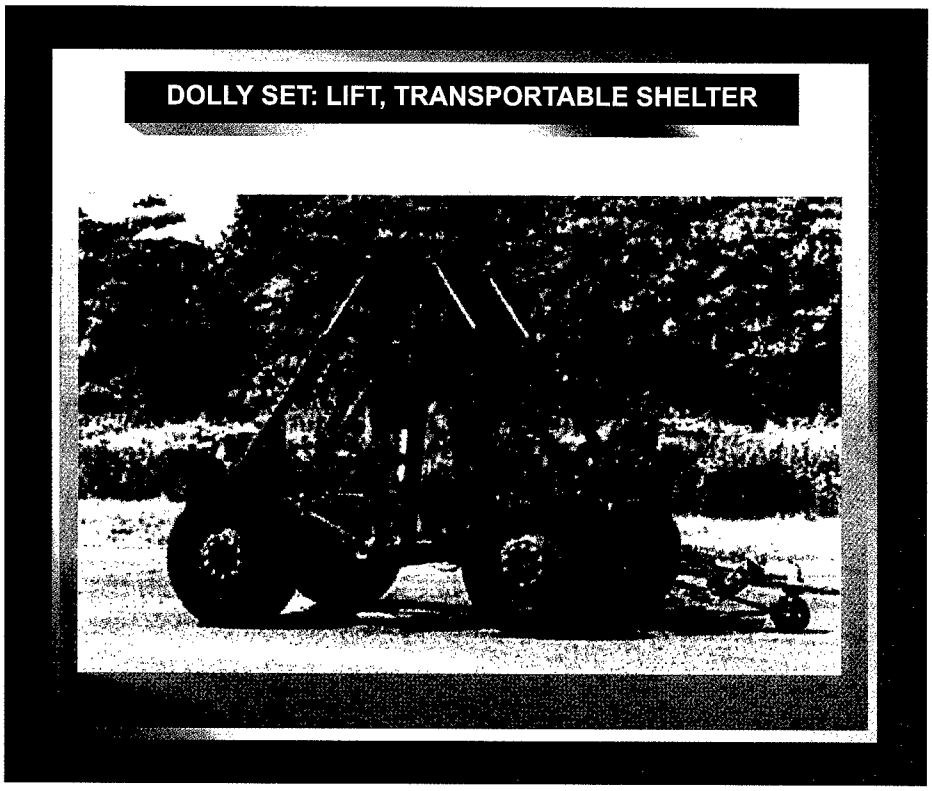


Figure II-30. Dolly Set: Lift, Transportable Shelter, 7 1/2 Ton, M1022A1

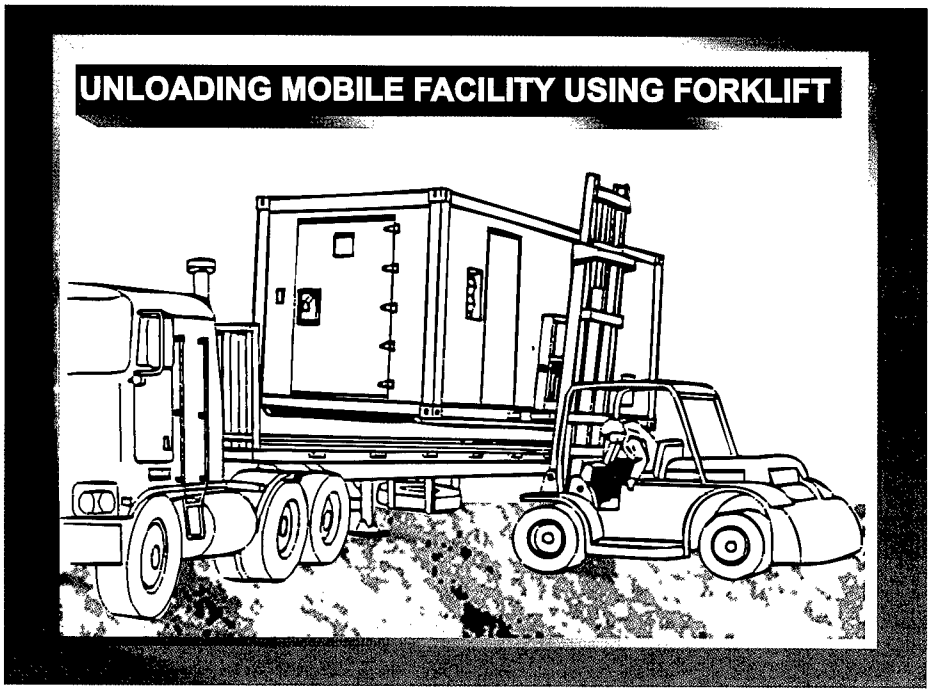


Figure II-31. Unloading Mobile Facility Using Forklift

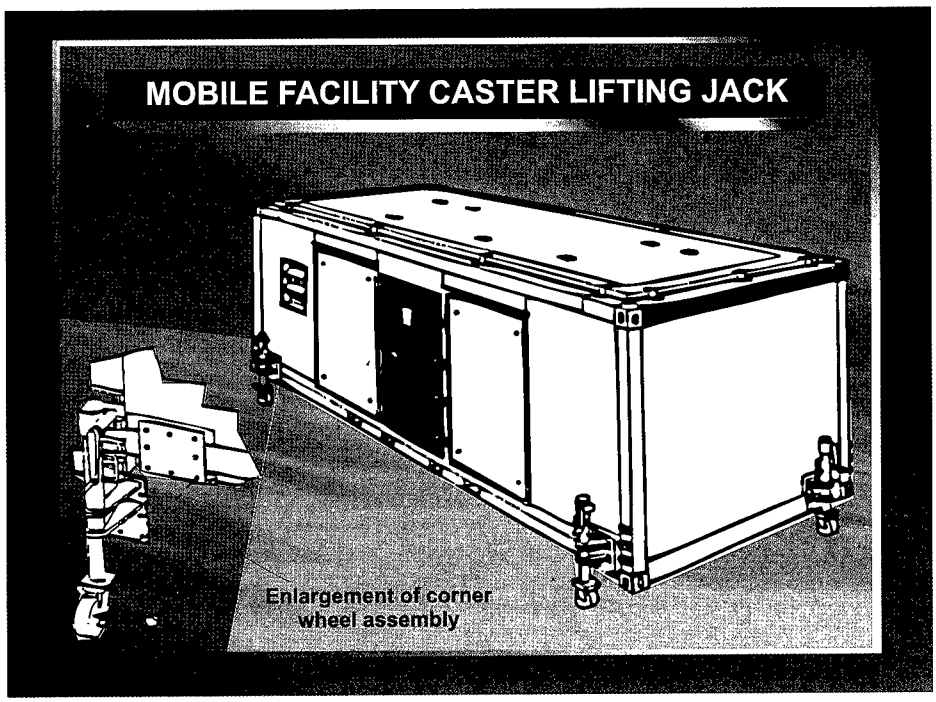


**Figure II-32. Mobile Facility Caster Lifting Jack**

e. AFJMAN 24-204 requires the use of the Shippers Declaration for Dangerous Goods Form to be used in preparing HAZMAT for MILAIR Shipments. Only the following hazardous materials are authorized for shipment inside inaccessible (after loading and stowage) containers IAW AFJMAN 24-204: (1) Fire extinguishers secured in appropriate holders and/or brackets or properly packaged according to AFJMAN 24-204. (2) Support equipment or other mechanical apparatus. Items fueled by a flammable liquid with a flash point above 38 degrees C (100 degrees F) must have the fuel system drained completely (not to exceed 17 ounces), but need not be purged. Tightly seal fuel lines and tank to prevent residual fuel leaks. Items fueled by a flammable liquid with a flash point at or below 38 degrees C (100 degrees F) must be drained and purged. Nonspillable batteries may be installed only when secured upright. (3) Items shipped under the proper shipping name "Life Saving Appliances" and properly packed according to AFJMAN 24-204. (4) Air conditioners and environmental control units, magnetic material, radioactive material, and thermometers must be packaged and restrained according to AFJMAN 24-204.

## SECTION D. PALLETS AND THE AIRLIFT SYSTEM

### 24. General

**The primary platform used to transport military cargo in the airlift system is the 463L HCU-6/E cargo pallet, hereafter referred to as 463L pallet.** This aluminum covered balsa or redwood core pallet, when properly loaded and restrained with authorized restraints, provides for palletized cargo loading and unloading of aircraft and within air freight terminals per the 463L Cargo Handling System. The pallet is framed on all sides with extruded aluminum edge rails. In addition, steel tie-down rings are distributed around the perimeter of the pallet to secure the covering nets and to facilitate handling (see Figure II-37).

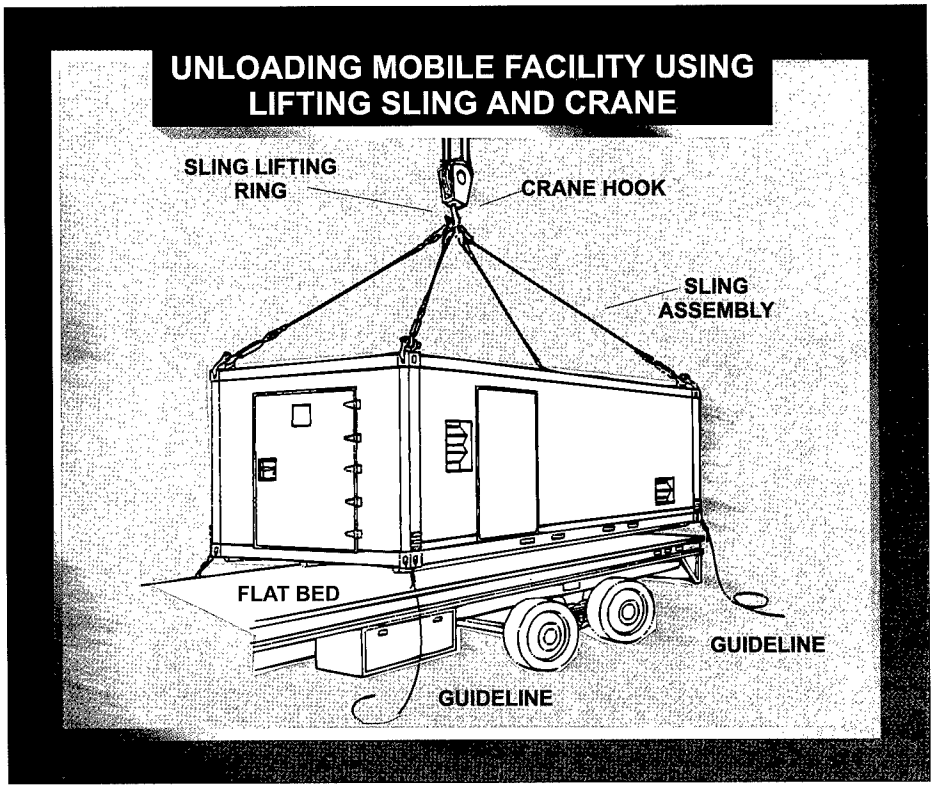


Figure II-33. Unloading Mobile Facility Using Lifting Sling and Crane

a. **General pallet dimensions and planning factors include the following:**

| | |
|---|---|
| Length | - 108 inches |
| Width | - 88 inches |
| Weight | - 290 pounds |
| Rated Capacity | - 10,000 pounds |

b. **Air Force Technical Order 35D33-2-2-2, 463L Air Cargo Pallets Types HCU-6/E and HCU-12/E** contains information relating to proper tie-down, loading, inspection, and storage of pallets. Army FM 55-9, Unit Air Load Planning, also has information on building 463L pallet loads.

## 25. 463L System

**The 463L system constitutes the majority of materials handling equipment used in support of airlift operations.** This system is comprised of: 60,000 pound capacity (60K) loaders (Figure II-38), 25,000-pound capacity (25K) loaders (Figure II-39), 25K tactical loaders, 40K loaders (Figure II-40), wide-body elevator loaders (Figure II-41), lower-lobe loaders, 10K fork lifts, and 10K all-terrain fork lifts.

## 26. Airlift System and ISO Containers

The airlift system is capable of handling ISO containers; however, one of the largest drawbacks of the ISO container is its empty (or tare) weight. Due to shortfalls in national strategic airlift capability, **the movement of large numbers of ISO containers in the airlift system would be done only in the most extreme situations**. When moving in the airlift system, ISO containers are loaded on aircraft utilizing the 463L pallet or the ISO/ Air Cargo Pallet as a platform to adapt the load to the 463L roller system found in all

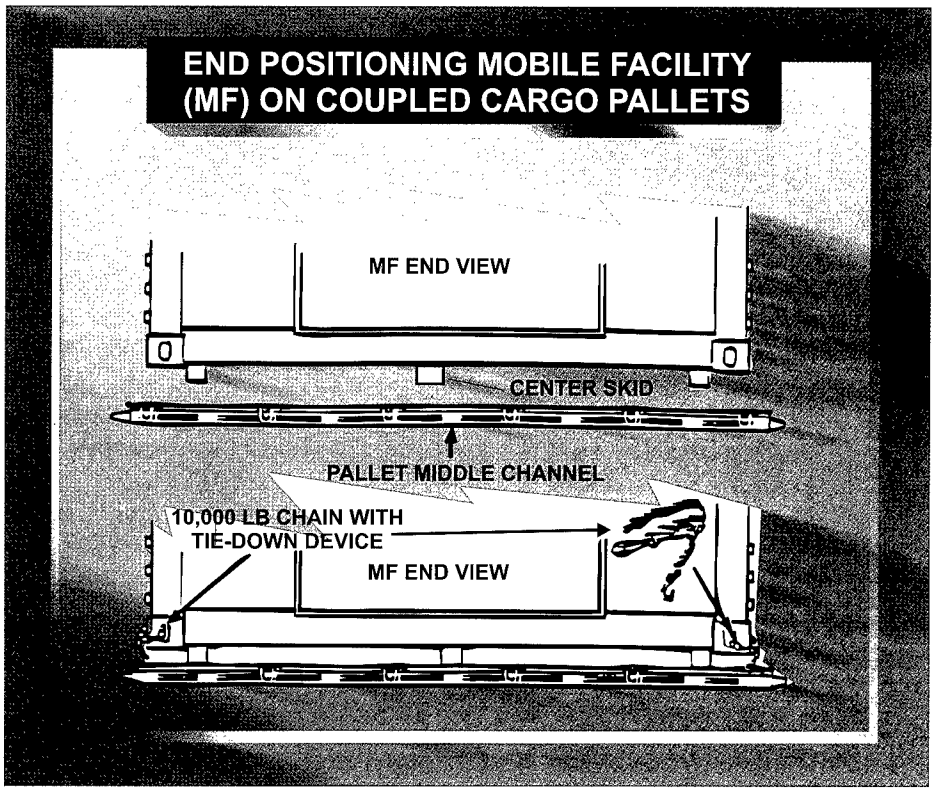


**Figure II-34. End Positioning Mobile Facility (MF) on Coupled Cargo Pallets**

Air Force cargo configured aircraft. Most aircraft configured for forward and aft loading are capable of handling 20- or 40-foot containers. AMC-approved 463L adaptor MIL-STD-1791 ISO/Air Cargo pallets for 20 foot ISO containers and tactical shelters are encouraged to be used when airlift is essential during peacetime operations or is necessary to support time-phased force and deployment data (TPFDD) requirements.

## 27. ISU-Series Containers

**ISU-60/ISU-90 containers are also compatible with the airlift system.** These containers are essentially 463L pallets with sides and tops used to enclose the material being shipped (see Figure II-13). These containers are available commercially and are funded by units.

## 28. 463L Pallet

**The 463L pallet is an integral part of the airlift system. It is designed specifically for consolidating equipment to be loaded onboard aircraft.** Prompt return of pallet and net sets to the airlift system from deployment or contingency locations is necessary to ensure that enough assets are available to provide rapid turn-around of retrograde and sustainment cargo. Geographic combatant commanders are responsible for pallets and net sets entering their areas of responsibility (AORs) and must ensure that pallet recovery and turn-in procedures are in place to support the airlift effort.

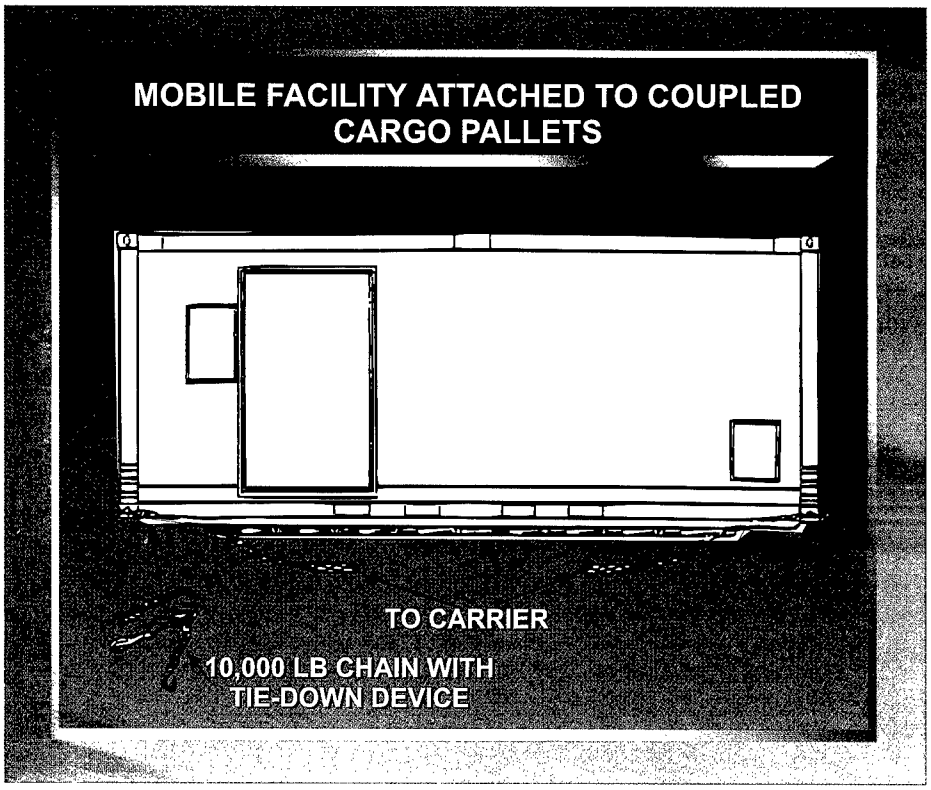


**Figure II-35. Mobile Facility Attached to Coupled Cargo Pallets**

## 29. MHE/CHE Requirements

**MHE/CHE requirements for loading and unloading containers on and off aircraft need to be identified concurrently with selection of aircraft.** Planners must consider the unique characteristics of the aircraft to be loaded or unloaded and any special handling requirements of the cargo. For example, highline (rollerized) dock operations may require use of cranes when use of K-loaders are limited. Difficulties must be foreseen when using K-loaders and highline (rollerized) dock. Winches may be used to augment loading or unloading operations of heavy containers. Special MHE is required when moving T-3 loads (3 pallet- trains).

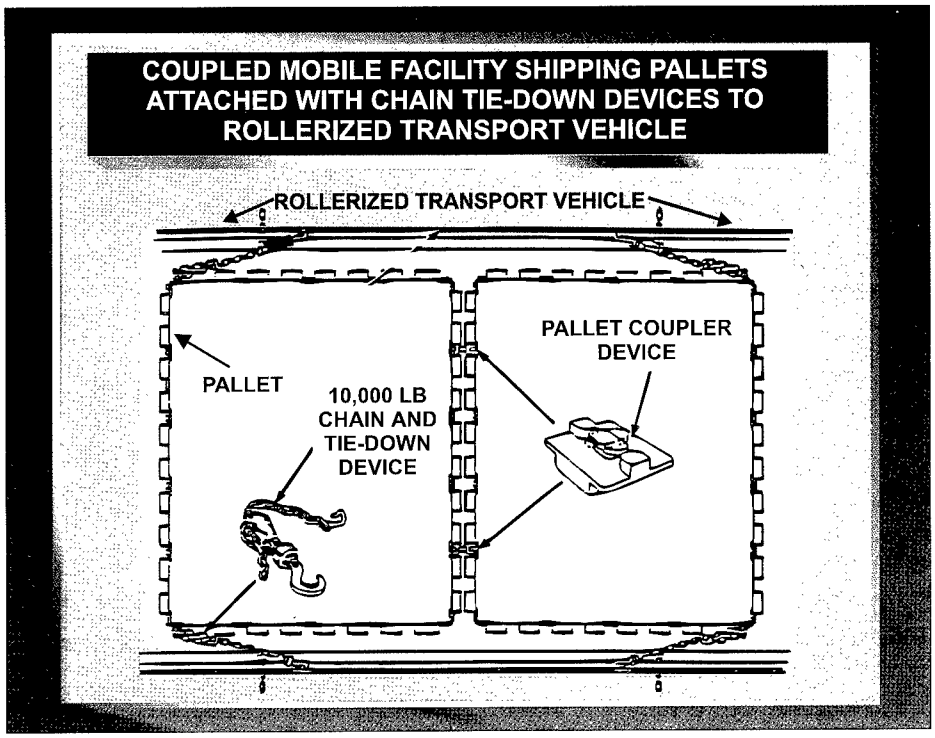


Figure II-36. Coupled Mobile Facility Shipping Pallets Attached with Chain Tie-Down Devices to Rollerized Transport Vehicle

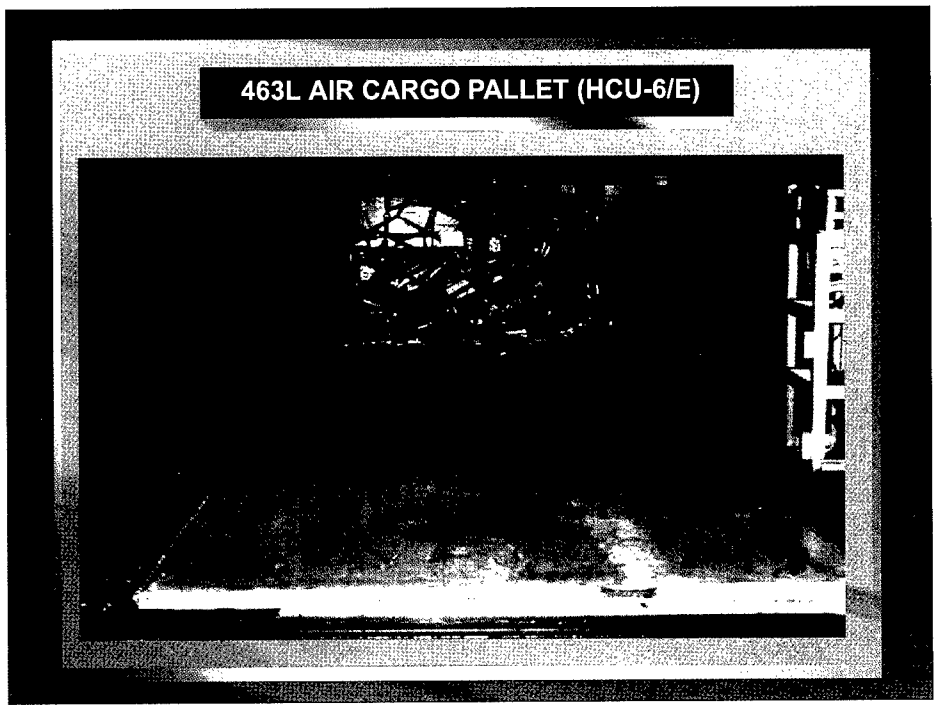


Figure II-37. 463L Air Cargo Pallet (HCU-6/E)

Figure II-38. 60,000-Pound 463L Aircraft Loader

Figure II-39. 25,000-Pound 463L Aircraft Loader

Figure II-40. 40,000-Pound 463L Aircraft Loader

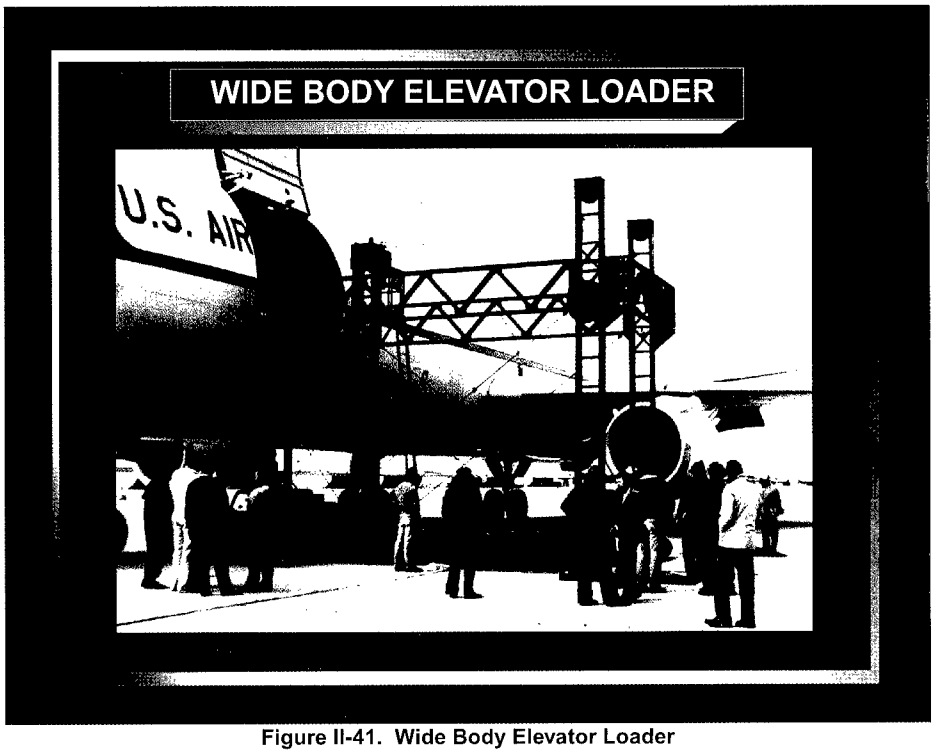


Figure II-41. Wide Body Elevator Loader

# CHAPTER III
# INTERMODAL CONTAINER TRANSPORT

*"The strategy of the free nations is inextricably tied to their ability to move freely on the sea and in the air."*

Admiral Robert B. Carney, USN

## SECTION A. LAND TRANSPORTATION

### 1. Rail - Car Types

a. **Within the United States, movements of containers and trailers via rail are handled primarily using specialized intermodal cars.** These intermodal cars are designed to handle container on flatcar (COFC), trailer on flatcar (TOFC), or a combination of both. Intermodal rail equipment ranges from a four-wheel spine car under 50 feet long to a five set articulated (permanently coupled) car over 250 feet in length. Depending on design, **the intermodal cars can accommodate containers single or double stacked.** Double stack intermodal cars generally have 40- to 48-foot wells and, when articulated in sets of five, have a capacity of ten 40- to 53-foot containers. Certain double stack car designs can accommodate 20-foot containers in the well or lower level, but none can carry 20-foot containers on the upper level.

b. **Widespread use of new intermodal cars has permitted rail carriers to meet shipper's needs** and to compete economically with origin-to-destination highway transportation. One of the benefits of articulated couplings is in decreased cargo damage due to the reduction of slack action while a train is underway. Articulated double stack cars have become the norm of the rail intermodal fleet.

### 2. Rail - Trends

a. While the US regular flatcar fleet is declining in numbers, **the specialized intermodal fleet is rapidly expanding.** Articulated couplings and/or double stack designed equipment have made traditional car counts obsolete as an indicator of overall capacity. Current industry practice is to count "platforms" available to move 40- to 53-foot containers and trailers. For example, while an articulated five well double stack arrangement is counted as a single car, it represents ten platforms. Double stack equipment growth is expected to continue and will make up an ever-increasing percentage of overall lift capacity.

b. **The increase in specialized intermodal rail capacity coupled with the decline in regular flatcars has significant deployment implications. They include the following:**

- Double stack cars require higher overhead rail line clearance (height above the rail), which may not be available at many military facilities.
- Intermodal railcars increasingly require specialized CHE for container loading and unloading. This specialized CHE is not available at many military facilities.
- Regular flatcars that can be used for "circus loadings" continue to decrease in number.

## 3. Foreign Railroads

**Intermodal container shipment by rail is becoming increasingly important in many foreign countries.** Use of rail for some DOD intermodal shipments within the theater of operations may greatly enhance logistic support. In most cases, foreign railway line clearances preclude double stack service. Additionally, few foreign countries have railcars that can hold more than three TEUs at a time. However, flatcars capable of carrying two or three TEUs are readily available in many foreign countries. The rail tunnel under the English Channel opens up new intermodal possibilities between Great Britain and the European Continent.

## 4. Highway Transportation

a. **Container chassis are specialized trailers with twist locks for ISO containers. They provide the primary highway container carrying capacity.** Leasing companies and ocean carriers own most of the chassis in CONUS. Most of these are owned by US companies, although some foreign flag carriers maintain chassis fleets captive in this country.

b. **The Maritime Administration maintains an inventory of US-owned chassis.** The following data includes the most current information concerning US-owned container chassis:

- The 1994 inventory of US-owned container chassis was over 340,500 units. Of this number, approximately 87,300 were for 20-foot containers only, 224,500 were for 40-foot containers only, and 14,100 could be used for either two 20-foot containers or one 40-foot container. The remainder of the inventory was capable of carrying non-ISO lengths.

- Commercial leasing companies control approximately 58 percent of all US-owned chassis, while carriers (ship companies) control approximately 42 percent. The large majority of **lessor** chassis (approximately 92 percent) can move either one 20-foot, one 40-foot, or two 20-foot container(s). The largest group of carrier-owned chassis, over 74,200 units, are for moving 40-foot containers only; but a large number are also used for moving 20-foot containers. (Note: Carrier-owned chassis are generally **not** available for temporary lease.)

## 5. DOD Assets

a. **Palletized Load System (PLS)**

- PLS is a tactical wheeled truck and trailer combination with integral self load and unload capability using demountable cargo beds (flatracks). **The primary mission of the system is the movement of conventional and special ammunition by field artillery and their supportive transportation units.** The PLS facilitates the relocation of ammunition stocks by combining the use of flatracks and vehicles in ammunition supply points. PLS supports the ammunition distribution concept called "Maneuver-Oriented Ammunition Distribution System" (MOADS) in the US Army corps area. For additional information on PLS and MOADS, see US Army Training and Doctrine Command (TRADOC) Pamphlet 525-65, "US Army Operations Concept for Class V Support Using the PLS."

- **There are two PLS configurations.** The **basic configuration** (M1075) consists of a truck with an accompanying towed trailer (M1076). A **second truck configuration** (M1074) has the same payload capacity and towed trailer but incorporates a materials handling crane. The flatrack will be loaded and unloaded

off the truck and trailer using the truck's hydraulic load handling system.

- **There are three versions (with a fourth under development) of PLS flatracks**; the M1077 basic flatrack, the M1 enhanced PLS flatrack (EPF), the M2, designed to carry M113 series tracked vehicles in addition to cargo, and the Container Roll-in/Out Platform (CROP).

•• The **M1077** is a 20-foot long by 8-foot wide by 5.6-foot high sideless platform built in accordance with tripartite (UK, GER, US) agreement standards. The M1077 has a tare weight of about 3,200 pounds and a payload capacity of about 33,000 pounds. The flatrack is North Atlantic Treaty Organization (NATO) interoperable, but does not have intermodal capability. The M1077 can be transported on M871 and M872 semitrailers, and can transport a 20-foot ISO container.

•• The **EPF** is a 20-foot long by 8-foot wide by 8-foot high open-top, sideless container, built to ISO and tripartite standards. The flatrack has inward collapsing endwalls and an outward folding endwall that forms a vehicular ramp. An outward half-folding hook bar endwall will allow for unloading capability of the MLRS rocket pods. The tare weight of the EPF is about 7,800 pounds. In PLS mode, the flatrack has a maximum payload capacity of about 28,500 pounds. For intermodal transport, the EPF can transport a maximum payload of about 30,700 pounds. The EPF is NATO interoperable and will be fully capable of intermodal transport.

•• The **M2 flatrack** has the same characteristics as the M1077 except that it is designed to transport M113 family tracked vehicles.

•• The **CROP** is designed to fit inside a 20 foot standard front opening container. It has front and rear locks that permits it to self-lock inside the container. The CROP will weigh approximately 3,300 pounds.

- **Container Handling Device (CHD).** The CHD permits the PLS truck to pick up any 20 foot ISO container, as long as it does not exceed the capability of the PLS Load Handling System. The use CHD precludes the use of a flatrack for movement of containers by the PLS.

- Figure III-1 depicts a PLS configured with basic truck/trailer and provides NSNs.

b. **Logistics Vehicle System (LVS). The LVS is owned by the Marine Corps and consists of one front powered unit (MK48) and any one of five rear body unit configurations.** Three of the rear body unit configurations provide the capability to move containers and are identified in the following paragraphs. The remaining two configurations provide support capability for the movement of containers and are the MK15 Wrecker Recovery and the MK16 5th Wheel Semitrailer Adapter. The **MK14 Container Hauler** is an ISO twist-lock equipped, 22.5-ton capacity, rear body unit designed to transport containers with standard 20-foot footprints. It can also transport smaller containers (QUADCONs, TRICONs, and other types of containers) if they are configured into a 20-foot ISO unit. Since the container is lifted from the base, height is not a limitation. The **MK17 Dropside Cargo with Crane** is a rear body trailer with an 8-foot x 16-foot loading area designed as a troop carrier as well as a carrier for fuel or water modules and 8-foot x 8-foot x 10-foot shelters and/or containers. The **MK18 Self-Loading Ribbon Bridge Transporter/ Container Hauler** is a hydraulically powered

| TYPE EQUIPMENT | NATIONAL STOCK NUMBER |
|---|---|
| Truck with Materials Handling Equipment Crane (M1074) | 2320-01-304-2277 |
| Truck (M1075) | 2320-01-304-2278 |
| Trailer (M1076) | 2330-01-303-5197 |
| Flatrack (M1077) | 3990-01-307-7676 |

**Figure III-1. Basic Palletized Load System Truck/Trailer**

tilt bed rear body trailer designed to load and off-load ISO containers, ribbon bridge components, or fill material without the assistance of materials handling equipment. Figure III-2 depicts the LVS in most of its various configurations and shows NSNs.

## SECTION B. SEA TRANSPORTATION

### 6. General

The preferred method of sea transportation of military cargo is to use FSSs and RO/RO ships for Unit Equipment (UE) and rolling stock, and containerships for sustainment cargo. Due to the fact that there are few RO/RO and breakbulk type ships as compared to the numbers of container capable ships, the partial adaptation of some container ships for carrying some uncontainerizable UE and rolling stock will often be necessary. There are three categories of containerships used for the transport of military cargoes. The oldest type are combination ships, most of which were originally built as pure breakbulk or RO/RO ships, and only later had dedicated container cellular sections inserted. These ships are usually self-sustaining (onboard cranes to load or discharge containers). These ships provide a wide-range of cargo carrying capability from containers to either RO/RO

## LOGISTIC VEHICLE SYSTEM

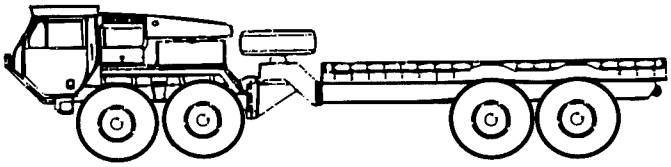

MK48/14 ARTICULATED PLATFORM TRUCK
(WITH ISO CONTAINER PLATFORM)

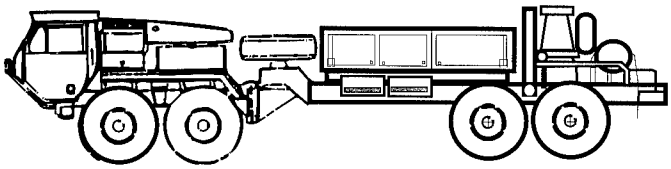

MK48/15 ARTICULATED RECOVERY TRUCK
(WITH CRANE AND 60,000 LBS./27 216 Kg WINCH)

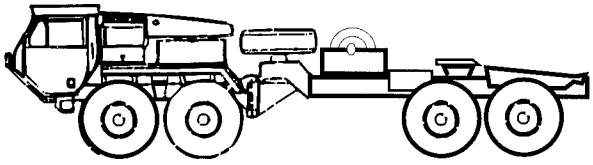

MK48/16 ARTICULATED TRUCK TRACTOR
(WITH 60,000 LBS./27 216 Kg WINCH)

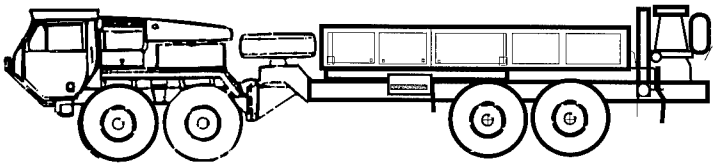

MK48/17 ARTICULATED DROPSIDE CARGO TRUCK
(WITH MATERIAL HANDLING CRANE)

| TYPE EQUIPMENT | NATIONAL STOCK NUMBER |
|---|---|
| MK48 | 2320-01-177-5162 |
| MK14 | 2320-01-176-0469 |
| MK17 | 2320-01-176-0468 |

Figure III-2. Logistic Vehicle System

and/or breakbulk cargoes. The second category represents the first generation of pure cellular containership construction. These ships are characterized by usually being self-sustaining. These two categories of ships are not commonly found in the commercial market anymore. The third category, non-self-sustaining containerships, describe ships designed for container only carriage but do not have container cranes as standard equipment. Several classes or generations of this category have been constructed, with each newer generation usually getting larger and carrying more TEUs. Some of the newer ships are too large to be militarily useful, their drafts may be too great for ports utilized in a specific contingency, or their beams may be wider than available cranes can reach. The Department of Defense owns ten auxiliary crane ships (T-ACSs) which can be used to augment the capability of existing cranes at a seaport of embarkation (SPOE) and/or seaport of debarkation (SPOD). Planning for the usage of a T-ACS must include time to both activate the ship and move to the needed site. (T-ACSs will often be utilized for a one-time deployment of cargo in which case time for loading and discharging cargo must also be planned for.) A more detailed discussion of various ship types can be found in Joint Pub 4-01.2, "Joint Tactics, Techniques, and Procedures for Sealift Support to Joint Operations."

## 7. Ship Types

a. **The vast majority of ships used in container transportation are the full containership, non-self-sustaining type.** This type of ship (Figure III-3) has no capability to off-load containers. There are no cranes on-board the ship capable of loading or discharging containers. These ships must

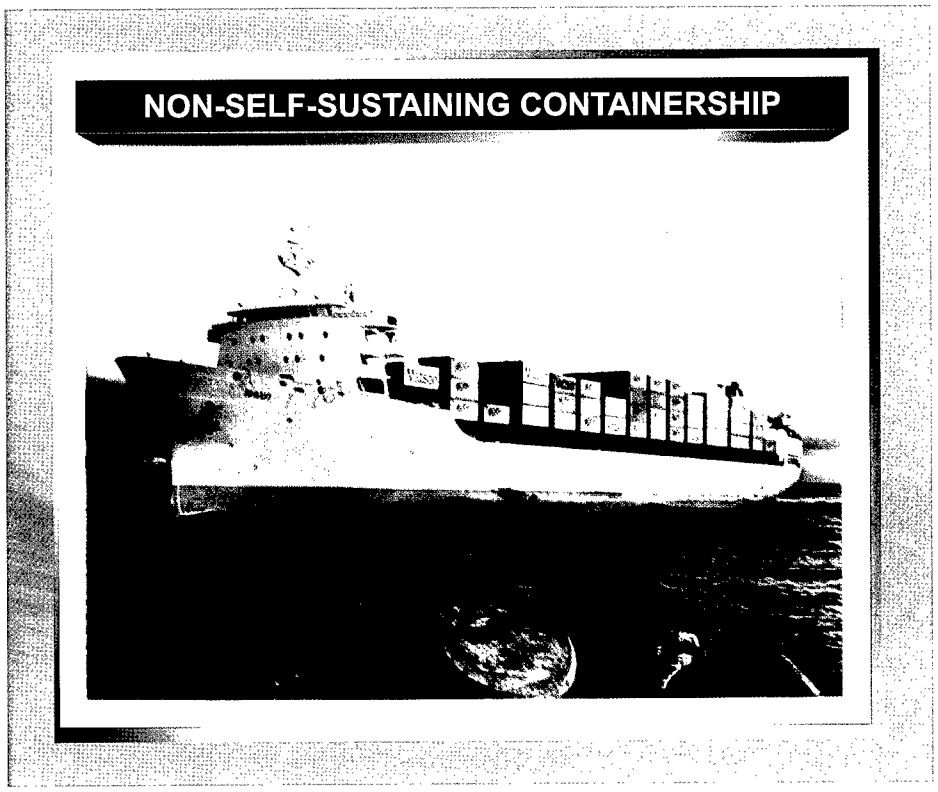


**Figure III-3. Non-Self-Sustaining Containership**

**Figure III-4. Self-Sustaining Containership with Containerized Units**

be off-loaded in-stream by a tactical auxiliary crane ship vessel, or at shoreside facilities having container handling equipment.

b. **Self-sustaining ships** (Figure III-4) **are highly desired** because of their ability to self-load or off-load containers in-stream, or at virtually any worldwide port.

c. **Various combination carriers are used to carry containers below or on deck** depending on the type and size of containers being used. RO/ROs, vehicle carriers, Container-RO/RO, Container-Breakbulk, Bulk-Container and lighter aboard ship (LASH) and/or barge ships are also considered combination ships. (Figure III-5)

## 8. Shipping Service

a. **Carriers provide various types of services shown in Figure III-6 to shippers.**

b. **The primary commercial industry service available to the Department of Defense on a day-to-day basis for the intermodal movement of containers is via liner service through the Worldwide Rate Agreements negotiated by MSC.** However, certain cargo such as ammunition and oversized equipment are classified as excepted commodities and require the negotiation of a specific rate pursuant to the relevant contract's changes clause, e.g., Special Middle East Sealift Agreement. When cargo requirements are received by MTMC, they can be booked directly aboard US flag carriers which can provide door-to-door service, if required. During contingencies, MSC contracts can provide additional services such as chassis, refrigerated containers and generator sets, and other types of services.

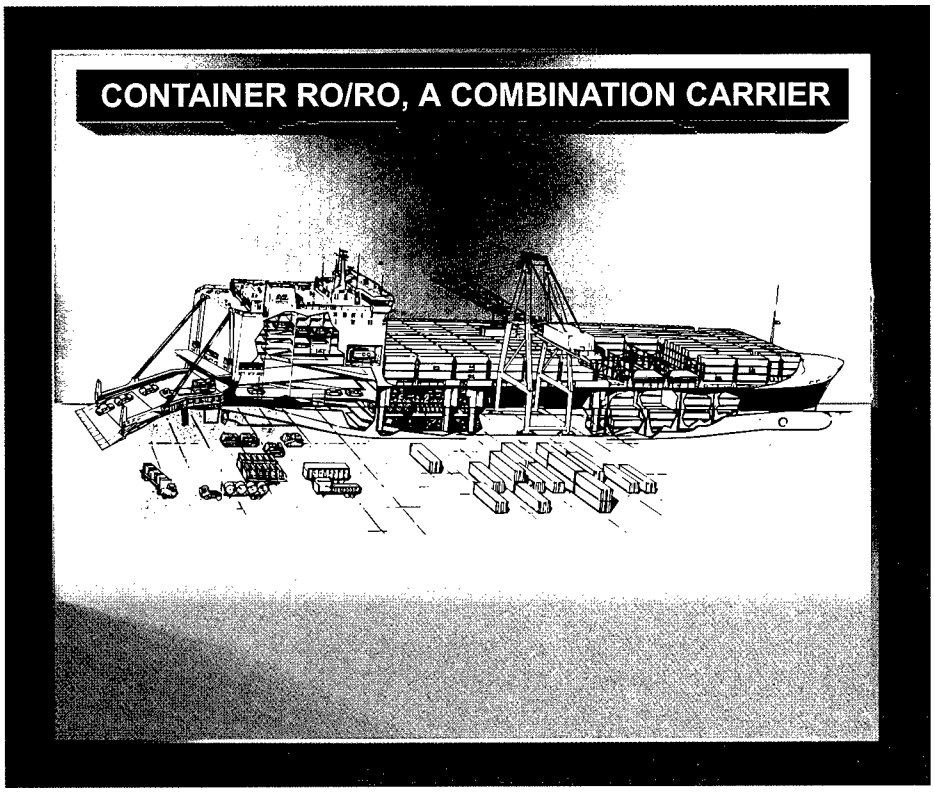


**Figure III-5. Container RO/RO, a Combination Carrier**

c. **USTRANSCOM through MTMC and MSC has the capability of providing common-use intermodal container services.** Using government-owned or chartered vessels, MSC operates vessels on a worldwide basis. MTMC, under the single manager concept, manages water terminals worldwide to load and discharge these MSC-operated vessels. Actual vessel stevedoring operations are accomplished either by military forces or with contracted commercial labor depending upon the tactical situation.

## 9. Ship Charters

Chartering is a maritime term for leasing a vessel. **There are three basic types of charters: voyage, time, and bareboat.**

a. **Voyage Charter. A voyage charter is a contract for a vessel to make a specific voyage or voyages.** The charterer specifies what type of vessel is required, what cargo is to be carried, where the vessel is to load or discharge, and when the vessel must be on-berth. The ship owner provides vessel, crew, fuel, stores and commits the vessel to being capable of making a given speed. Voyage chartering is used extensively for the movement of petroleum (crude and refined), grain, ore, and other bulk commodities. It is employed by the Department of Defense to augment additional movements of unit equipment and petroleum, oils, and lubricants which cannot be met by current DOD vessel assets.

b. **Time Charter. A time charter is a contract for use of a vessel, i.e., its cargo carrying ability, for an agreed period of time.** The charterer pays for the entire carrying capacity of the vessel on a per day rate even if the vessel is laid up or carries less than its full capacity. Additionally, the

## TYPES OF SERVICES TO SHIPPERS

### LINER SERVICE

Service provided by a shipping company whereby cargo carrying ships are operated between scheduled and/or advertised ports on a regular basis. Companies may also provide for land transportation from the shipper's facility to the consignee's destination. This is sometimes referred to as "door-to-door" service.

### FEEDER SERVICE

Shipping containers unloaded by large vessels in major ports and then transshipped to their destination via smaller ships. This may be included in the Liner Service described above.

### INDUCEMENT SERVICE

The minimum quantity of cargo or the minimum charge required by a shipping line to make it worthwhile to call at a particular port.

### CONTRACT OF AFFREIGHTMENT

Agreement for the movement of cargo on a measurement ton basis.

### TRAMP SERVICE

Ships that will call at any port to carry whatever cargoes are available.

**Figure III-6. Types of Services to Shippers**

charterer determines where the ship goes and what it carries while paying for port charges and the vessel's fuel. Liner companies often augment their fleets with vessels chartered for 6- to 18-month periods or longer. Time chartering is used by the Department of Defense to obtain controlled assets to meet transportation requirements while securing a better rate than a voyage charter.

c. **Bareboat. A bareboat charter is a contract whereby the charterer gets the rights and obligations of "ownership" usually for a long period of agreed upon time.** The charterer takes over the vessel, becoming responsible for manning, storing, navigation, and maintenance of the vessel. The Department of Defense utilizes this type of charter to acquire transportation assets to meet long-term objectives.

## SECTION C. AIR TRANSPORTATION

### 10. General

In times of crisis or war, **the Air Mobility Command will provide airlift support for all ISO containers and tactical shelters** to meet requirements that have been validated by the supported combatant commander. During peacetime, airlift of ISO containers and tactical shelters must be air eligible cargo with an appropriate transportation priority authorized under the provisions of AFR 76-38/AR 59-8/OPNAVINST 4630.18E/ MCO 4630.6D/DLAR 4540.9, "Department of Defense Common-User Airlift Transportation," and Joint Pub 4-01, "Joint Doctrine for the Defense Transportation System."

### 11. Container Restraint Criteria

**Cargo items in their shipping configuration shall be capable of being restrained to and withstanding**, without loss of serviceability and structural integrity, **the following forces** applied dynamically for a 0.1 second (100 msec) duration:

| Direction | Load Factor |
|---|---|
| Up | 2.0G |
| Down | 4.5G |
| Forward | 3.0G |
| Aft | 1.5G |
| Lateral | 1.5G |

Restraint systems must comply with requirements outlined in AFSC Design Handbook DH 1-11 for Air Transportability and/or in MIL-STD-1366 Transportability Criteria.

### 12. Planning Data for Carrying ISO Container/Pallet Trains on Military and Commercial Airlift Assets

Air transport containers used in commercial air transport are not roll-on/ roll-off compatible with the military air cargo system. However, these units can be placed on 463L pallets and moved on C-130, C-141, C-5, C-17, KC-10, and multiple civilian aircraft which participate in the Civil Reserve Air Fleet (CRAF) program. **With increased dependence by commercial transportation on intermodal containers, the Air Force has developed methods to move them by air.** The movement limits for organic and/or military airlift are provided in Figure III-7. Because of the large number of various CRAF aircraft types, similar data for CRAF types can only be determined at the time of execution.

### 13. Assumptions

Other assumptions used in the development of these tables include the following:

| ORGANIC/MILITARY AIRCRAFT MOVEMENT LIMITS FOR CONTAINERS AND PALLET TRAINS | | | | |
|---|---|---|---|---|
| 20-foot Container/2 Pallet Train | | | | |
| C-130 E&H LOW STRENGTH FLOOR AREA | C-141B LOW STRENGTH FLOOR AREA | C-5 ANY LOCATION ON FLOOR | C-17 CENTER-LINE LOAD | KC-10 ANY LOCATION ON FLOOR |
| 37328 | 27400 | 33000 | 44800 | 25000* |
| C-130 E&H HIGH STRENGTH FLOOR AREA | C-141B HIGH STRENGTH FLOOR AREA | C-5 ANY LOCATION ON FLOOR | C-17 CENTER-LINE LOAD | KC-10 ANY LOCATION ON FLOOR |
| 42672 | 41400 | 33000 | 44800 | 25000* |
| 20-foot Container/3 Pallet Train | | | | |
| C-130 E&H LOW STRENGTH FLOOR AREA | C-141B LOW STRENGTH FLOOR AREA | C-5 ANY LOCATION ON FLOOR | C-17 CENTER-LINE LOAD | KC-10 ANY LOCATION ON FLOOR |
| 44800*** | 37100 | 44700 | 44800 | 25000** |
| C-130 E&H HIGH STRENGTH FLOOR AREA | C-141B HIGH STRENGTH FLOOR AREA | C-5 ANY LOCATION ON FLOOR | C-17 CENTER-LINE LOAD | KC-10 ANY LOCATION ON FLOOR |
| 44800*** | 44800*** | 44700 | 44800 | 25000** |

* Weights shown represent the maximum gross weight of a standard ISO container which the aircraft roller conveyor system is capable of supporting under flight conditions. The working gross weight limit is influenced by several other factors as well. Among these are the weight carrying capability of aircraft loading equipment and the allowable cabin load for mission range.

accommodate the 20-foot ISO air container. Maximum ISO container weight using this pallet is 25,000 pounds.
** Present air-land containers are design limited to 25,000 pounds gross weight.
*** This value is the design limit for ISO surface mode containers.

**Figure III-7. Organic/Military Aircraft Movement Limits for Containers and Pallet Trains**

a. Tare weight of one 463L pallet: 290 pounds.

b. Low strength floor area roller loading limits,

- C-130 - 2,333 pounds per roller contact.
- C-141 - 1,580 pounds per roller contact.

c. High strength floor area roller loading limits,

- C-130 - 2,667 pounds per roller contact.
- C-141 - 1,580 pounds per roller contact.

d. **C-5 roller load limits.**

- 1 and 2 roller conveyors contacted - 1,200 pounds/ft.
- 3 and 4 roller conveyors contacted - 2,400 pounds/ft.

e. **C-17 roller load limits.** Center roller conveyors contacted - 2,000 pounds every 10 inches.

## 14. ISO 40-foot Containers

Current ISO 40-foot containers will be placed on a 5 pallet train. The maximum gross weight of the container is rated at 45,000 pounds. The 40-foot container will go on all aircraft listed above except the C-130.

# CHAPTER IV
# MANAGEMENT AND CONTROL OF CONTAINERS

*"Generally, management of the many is the same as management of the few. It is a matter of organization."*

**Sun Tzu**

## SECTION A. ORGANIZATIONS

### 1. Container Management in the Department of Defense

a. **DOD container management provides visibility and control of all DOD-owned or leased intermodal ISO containers** for both common-use transportation and Service-unique missions in support of geographic combatant commanders. DOD ISO containers are managed and controlled in four basic categories as described in Figure IV-1.

b. **All DOD component and Service-owned intermodal ISO containers** (20- or 40-foot) procured for transportation of cargo (including containers loaded and pre-positioned ashore and afloat ready for deployment) **are potential DOD common-user container fleet assets** when approved for release by the owning Service.

c. **DOD ISO containers are maintained in serviceable condition IAW established standards and regulations** to move the cargo for which they were procured (i.e., ammunition, general cargo, refrigerated cargo). The Department of Defense and DOD component regulations ensure both the accountability and the material condition of containers being permanently added or temporarily transferred to the common-user container fleet for use in support of joint operations.

d. **USTRANSCOM, through its Army component MTMC, manages and employs the DOD common-user container fleet** during joint exercises and across the range of military operations. The DOD common-user container fleet is augmented by:

- Leasing and/or procurement of commercial containers; and/or
- Transfer of DOD component and Service-owned container capability that is not in use, upon request by USTRANSCOM and approval and release by the Service component or geographic combatant commander (when appropriate).

### 2. Joint Staff and Geographic Combatant Commands

a. **Joint Staff (JS).** The JS is responsible for the following functions with respect to intermodal containerization:

- Provides oversight to the **maintenance and improvement of interoperability** between the various Service container systems.
- Sponsors the development of **joint container doctrine, tactics, techniques, and procedures** within the joint doctrine development program.
- Promulgates **containerization guidance** for deliberate planning in Annex B (Logistics) and Annex J (Mobility) to the Joint Strategic Capabilities Plan.
- During contingency operations when DOD requirements impinge on the

**CATEGORIES OF DEPARTMENT OF DEFENSE INTERNATIONAL ORGANIZATION FOR STANDARDIZATION (ISO) CONTAINERS**

**Department of Defense-owned or leased common-use containers controlled and managed by US Transportation Command (USTRANSCOM).**

**Service-owned containers procured for transportation or prepositioning cargo and controlled and managed by the Service. These containers provide potential capability for common-use service, as agreed upon in a memorandum of agreement/understanding between each Service and USTRANSCOM.**

**Service-owned containers procured as unit equipment, e.g., hospitals, maintenance facilities, Palletized Loading System flatracks, and modular ISO containers (QUADCONs/ TRICONs) controlled and managed by the Service. These containers are not intended for common-use.**

**Commercial containers carrying Department of Defense cargo booked under the worldwide container agreement and rate guide.**

**Figure IV-1. Categories of Department of Defense International Organization for Standardization (ISO) Containers**

commercial sector, the Joint Staff (in coordination with the DOT and USTRANSCOM) **allocates commercial container capability** made available by DOT amongst Services and Defense agencies in support of geographic combatant commanders.

b. **Geographic Combatant Commanders.** Geographic combatant commanders are responsible for the **management and control of DOD intermodal container assets and systems in their AOR**. Intermodal container systems should be managed in accordance with the policies delineated in DOD regulations and joint doctrine consistent with the tactical situation and concept of operations.

- **Organization.** Employment of intermodal containers and systems within a theater is essential to the sustainment and resupply of forces. As such, **geographic combatant commanders are to ensure that these vital systems receive command emphasis at the highest levels**. Geographic combatant commanders have several options available to execute their container management programs. They may assign this mission to their **Logistics Director**, their theater **joint movement center (JMC)** (when established) or to a separate **container control activity (CCA)** under the command of a Service component. A CCA functioning under the supervision of the JMC can provide visibility over intermodal container systems entering and departing the theater. Depending on the tactical situation, the CCA may have representatives stationed at theater aerial ports of debarkation (APODs) and SPODs to ensure timely and accurate reporting. The MTMC management support cell will provide the CCA visibility of containers in-transit and arriving in the theater. It will manage

their discharge from the vessel and make disposition based on theater guidance. The CCA will coordinate with the MTMC management cell for redeployment and/or retrograde of containerized cargo and empty containers.

- **CCA Functions and Responsibilities.** The functions of the theater container control activity are as follows:

  •• Ensure that a **viable container management program** is established, maintained, and enforced to the maximum extent possible consistent with the tactical situation.

  •• Ensure that **critical intermodal container handling resources (personnel and equipment) are deployed** in sufficient time to allow for smooth reception, onward movement, and accountability of cargo and containers.

  •• **Maintain communication with USTRANSCOM** to ensure availability of adequate and timely information on the containers and contents inbound to the theater. Further, advise USTRANSCOM of problems encountered.

  •• Provide for **prompt receipt, unstuffing, and return of containers** entering the theater.

  •• Provide for **control, expeditious download, and return** of 463L pallets, nets, and tie-down equipment entering the theater of operations.

  •• Consistent with the tactical situation, ensure that **procedures** are implemented in theater **to minimize loss or damage** to intermodal container systems.

  •• Ensure **appropriate, efficient, and effective utilization** of intermodal container systems.

  •• **Coordinate with component installation and organization CCAs** for continuous accountability of all containers arriving, departing, and moving within the theater.

- **Planning.** During the deliberate planning process, **geographic combatant commanders develop requirements and work with USTRANSCOM and DOD logistics agencies** to optimize use of the DOD container system for movement between origin and destination of all classes of supply and unit equipment, consistent with the supported commander's concept of operations.

- **CJCS Exercise Program. Geographic combatant commanders should integrate the DOD container system into their exercises** to improve the readiness of their forces to effectively and efficiently use intermodal containers and systems in the field.

## 3. United States Transportation Command

a. As the DOD single manager for transportation, **USTRANSCOM manages DOD intermodal containers while they are moving in the DTS**. Through its transportation component commands (TCCs), USTRANSCOM also provides intermodal container support services necessary for the movement of forces and sustaining supplies from origin to destination in support of joint operations.

b. **USTRANSCOM exercises combatant command (command authority) over DOD container system assets**, except for Service-unique or theater-assigned, and provides management support to the Services and commanders of combatant commands for Service-unique or theater-assigned container system assets when directed by the Secretary

of Defense or by agreement with the Chief of a Service or geographic combatant commander.

c. **USTRANSCOM works with the DOD logistics agencies and CINCs** to determine overall intermodal container scenario-based contingency requirements, recommends the size and composition of the DOD-owned nucleus container fleet, and coordinates with the Services to program acquisition. **USTRANSCOM develops agreements with industry to provide intermodal capability during contingencies** for containers, chassis, containerships, terminal services, and ITV systems. For example, when the applicable sealift program (Voluntary Intermodal Sealift Agreement or Sealift Readiness Program) is activated, shipping companies whose containerships are acquired must provide up to three sets of containers, chassis, and other support equipment in addition to their vessels.

d. During operations, **USTRANSCOM provides DOD container capability** through purchase, lease, or when appropriate by requesting transfer of Service-owned container capability not in use. Supply or Service needs met by contracting are shown in Figure IV-2.

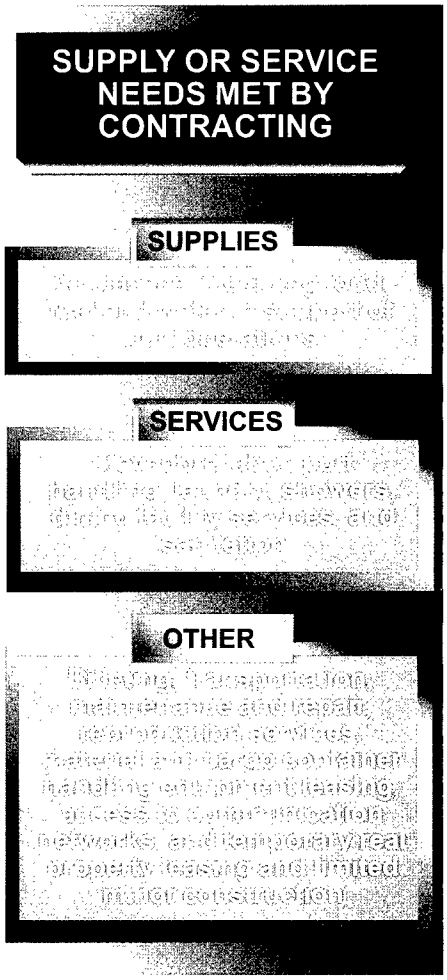


**Figure IV-2. Supply or Service Needs Met by Contracting**

- Through the MTMC, **USTRANSCOM manages and monitors the status of DOD-owned, leased, and commercial intermodal surface containers** while these containers are in the DTS. MTMC also provides operational management and control (including maintenance and repair) of the Army-owned Containerized Ammunition Distribution System (CADS) container fleet.

- **MTMC develops and maintains contingency plans** and positions DOD common-use and CADS containers based upon requirements of the DOD components once validated by USTRANSCOM, Army, and the joint munitions transportation coordinating activity (JMTCA) respectively.

- Through the MSC, **USTRANSCOM negotiates intermodal rates and procures related services** to meet DOD intermodal transportation requirements. MSC also acts as the DOD agent for procurement (lease or buy) of commercial ISO intermodal containers, flatracks, and support equipment for DOD common-user container system service or, upon request, for Service-unique requirements.

e. During the deliberate planning process, **USTRANSCOM plans for optimizing the DOD container system** for the origin to destination movement of all classes of supply and unit equipment IAW the supported commander's concept of operations and logistical support. Container requirements need to be defined and submitted to USTRANSCOM and provided to MSC for planning purposes, including development of the TPFDD. **USTRANSCOM provides transportation intelligence for geographic combatant commanders** that includes theater intermodal infrastructure assessment, container handling equipment availability, and port throughput capabilities as well as other types of transportation intelligence.

## SECTION B. PROCUREMENT AND LEASING

### 4. Containers and Intermodal Services

a. **Procurement (buy). MSC purchases new intermodal equipment for the DOD common-use container system and commercially-built containers for Service-unique purposes upon request.** When required, MSC also purchases containers for common-use service. The requesting activity must provide the appropriate information and/or data in order for MSC to procure intermodal equipment at minimal cost to the government within the time required. A procurement action can take up to six months from the time the request is received until the award is made, with fabrication of unique requirements and delivery extending well beyond that, provided the necessary information and/or data is fully supplied and no changes are made to it during the procurement process. **Information and/or data required includes the following:**

- Detailed description and/or type of container or intermodal equipment needed. Include specifications for ISO type and size. Marking and/or drawing arrangements desired. If MILSPEC is used, provide detailed specification and/or documentation.
- Quantity required (Option for additional purchases).
- Required delivery date and location.
- Technical point of contact.
- Hours of operation and commercial telephone number.

b. **Upon Receipt of Requirement.** MSC will estimate procurement cost and request **Military Interdepartmental Purchase Request (MIPR)** or fund cite (NAVCOMPT Form 2275 for Navy and/or Marine Corps activities) to cover contracting action. The Request For Proposal for procurement will not be issued until funding is received.

c. **Lease. MSC will lease new or used containers and intermodal equipment for the DOD common-use container system and for Service-unique purposes upon request and acceptance.** The requesting activity must supply specific information to MSC to ensure that the equipment is leased at minimal cost to the government within the time required. The time to complete a procurement action, however, depends on the requirement. A contract for equipment to be used in national emergency or contingency can be completed in a few days if equipment is available on the commercial market, whereas normal procurement time from receipt of request to contract award is 15 working days. **Information and/or data required is as follows:**

- **Detailed description and/or type** of container or intermodal equipment needed. Must include size, type and any special items required.

- **Quantity required** (option for additional leases.)

  •• Number of containers for unit equipment.

  •• Number of containers required for sustainment (in 30 day increments).

- **Term of lease.** Number of days equipment will be leased. Describe intended use of equipment. Equipment must be used for intermodal transportation in the DTS. Give estimated dates of on-hire and intended redelivery location(s). Equipment dropoff (leased at one location and returned at another) requirement must be stated.

- **Chassis support.** Specify requirement and intended use. Require information if chassis are still needed after intermodal containers are loaded.

- **Reefer support.** Specify requirement for additional support; i.e., generator sets, spare part kits, reefer mechanic (shore and/or shipboard), manuals.

- Meet the **inspection requirements** for containers carrying DOD material as shown in MILHDBK 138A.

- Required **delivery date** at requestor's facility. Give location, hours of operation, address, points of contact and phone numbers.

- **Ship** on which intermodal equipment will be loaded, on berth date and location.

- **Whether requestor provides intermodal equipment inspector(s)** for on-hire and/or off-hire of equipment.

d. Upon receipt of the requirement, **MSC will estimate lease cost and request MIPR** or fund cite (NAVCOMPT Form 2275 for Navy and/or Marine Corps activities) to cover contracting action. The RFP for procurement will not be issued until funding is received. Estimated lease cost will include lease per diem, estimated repair cost, dropoff charges, funds for special items, on-hire and/or off-hire inspection fees, and any linehaul and/or drayage fees.

## 5. Service-Owned Equipment (Containers, Pallets and Other Related Equipment)

a. **Unit Requirements. Units should project container requirements** prior to deployment and coordinate with the installation and/or base transportation office. **Requirements should then be consolidated** at the transportation office and updated at least quarterly. The installation and/or base transportation office should compare container requirements with their prestaged container inventory, and estimate the amount that would have to be leased and/or procured at the time of deployment. The 20-foot container is the container of choice for unit deployment, although for certain types of units, 40-foot containers have been validated as deployment platforms. Transportation offices must also be prepared to estimate and/or obtain commercial flatracks should a unit be deploying by containership. Commercial carriers can provide technical expertise for intermodal container and/or flatrack requirements, stuffing and/or loading, and transportation, particularly if origin to destination service is utilized.

b. **Predeployment.** As part of the deployment planning process, **unit movement officers will verify container requirements** with the installation and/or base transportation office **and request the necessary containers for deployment**. The transportation office will either provide containers from the prestaged inventory and/or forward the requests for additional containers to MTMC/MSC. The unit and

the transportation office can also use these requirements when determining MHE/CHE and transportation requirements during outload.

c. **Deployment. Units receiving containers for deployment must ensure accountability of each container** by ISO alpha prefix and serial number. Upon arrival at the SPOD, the unit may unstuff the containers at the port, or move forward with the containers. If containers are unstuffed at the port, the unit must identify them to the port Movement Control Team (MCT) for retrograde. The MCT will then contact the Joint Logistics Center for disposition.

d. **Redeployment.** If the unit redeploys with the original containers, it must **notify the installation and/or base transportation office of the requirement to return the containers to the vendor**. Containers will be identified by ISO alpha prefix and serial number. The transportation office will then notify MTMC of the requirement and coordinate for the transportation of those containers.

e. **Responsibilities. The Services are responsible for procurement of containers** to be used for unit deployments. This can be done through a Service major command or by MSC.

## 6. Contingency Contracting

**Contingencies require planning, rapid response, flexible procedures, and integration of efforts.** For deployments to contested areas of operations, or where combat action is deemed likely, the combatant commander will call for maximum combat power in the initial deployment phase. This can lead to delays in deploying an adequate support structure. In these instances, **contracting can be an effective force multiplier** of CSS for deployed forces. When properly used, contracting is another essential tool of the logistician in support of the mission.

a. **Contingency Contracting in Support of Container Operations. Contracting bridges the gaps that may occur** before sufficient organic support units can deploy or before scheduled logistics civil augmentation program (LOGCAP) resources can arrive in the theater of operations. **It is also valuable where no host-nation support (HNS) agreements exist**, or where HNS agreements do not provide for the supplies and/or services required. **It can serve to reduce dependence on the CONUS-based logistics system.** Satisfying requirements for supplies and services by contracting can improve response time during the critical early stage of a deployment, and free airlift and sealift for other priority needs. **Contracting also can augment existing logistical support capabilities**, providing a new source for critically required supplies and services. For example, contracting can replace some of the supply or service needs shown in Figure IV-2, in support of container operations which would otherwise be furnished by military units.

b. **Joint Contracting Offices.** Recently, US forces have deployed in support of joint operations to contingencies in areas of the world with immature theaters. The trend of world events suggests such operations will reoccur. These operations may require the creation of joint contracting elements, staffed by personnel from all Services operating in the theater. **A joint contracting office will normally be established by the theater or highest level of organization deployed.** The joint contracting office may include some or all of the Warranted Contracting Officers in the theater. Another joint option would be to create multiple contracting offices that would provide support on an area basis. If separate Services maintain parallel contracting organizations, cooperation and coordination among the Service elements will preclude

inter-Service competition for local supplies or services, obtain more advantageous prices through consolidation of requirements, and more effectively utilize scarce personnel resources.

c. **Contracting Support Plan (CSP).** Unplanned deployments do not preclude planning for their support. Planning helps perfect the mechanisms and organization required to accomplish support with a minimum of time or effort. **The mechanism for planning is the CSP.** The plan assures full utilization of HNS and LOGCAP resources, and that contracting solutions also receive consideration in logistics planning for contingency deployments. The MTMC cell, as part of the strategic seaport operating force package, is responsible for all port operations contracting support.

d. **Contracting Support Kit. The contracting support kit should provide sufficient information on potential ports of debarkation (PODs) within a theater.** The contracting team will carry a combination of the basic kit with a specific data base provided by the Department of the Army, the State Department, or the supporting CINC for the deployment area. In developing the area data bases for the kits, **contracting personnel must use all available data concerning local resources**. This may include area studies, locally developed logistical support data bases, recommendations from State Department Foreign Service personnel, and information from US or other civilians familiar with the area. A thorough knowledge of existing LOGCAP and HNS agreements available in the area of operation is also necessary.

e. **Civil Affairs (CA). CA units have the responsibility to identify local resources, materials and services available in the area of operations.** CA units at all levels help contracting elements in the conduct of the CSP by continuously developing and maintaining area studies and on-the-ground area assessments. They will produce "smart books," conduct market surveys, and provide current political, economic, and social information. CA personnel advise commanders and contracting personnel about host-nation language, people, institutions, and transportation infrastructure.

f. **Army Corps of Engineers. The contractual responsibilities of the Corps of Engineers (COE) in support of a deployment will vary** depending on the extent to which operation plans (OPLANs) assign responsibility to the COE. Those COE representatives assigned probably will come from the nearest COE district office, depending on district boundaries. The contracting officer should therefore anticipate contracting for some construction requirements, the volume and magnitude of which will be determined by the engineering units or assets available to the deployment commander. **In general, COE participation would involve settling real property transactions.** However, the contracting officer may become involved with requests involving real property and may arrange for the temporary leases of real property to support the contingency. By regulation, the COE is responsible for the leasehold acquisition of real property assets by the Army. Claims arising from the occupancy of real property by US forces are to be referred to the COE representatives for settlement.

## SECTION C. MAINTENANCE, REPAIR, AND INSPECTION

### 7. General

This section outlines DOD requirements for container maintenance, repair and inspection from receipt to shipment at user activities for both common-use and Service-owned containers.

a. **Common-use containers** can be either DOD-owned or leased from commercial industry. In either case, both are managed and controlled by USTRANSCOM (MTMC) as an element of the DOD container system.

b. **Service-owned containers** include both the CADS fleet of containers used throughout the Department of Defense and MILVANs or commercial ISO containers authorized and controlled by a unit or activity within a Military Department (DOD- component).

c. The above applies to 20-foot ISO/ANSI standard containers. This section does not include Equipment Deployment and Storage System or older Container Express (CONEX) containers.

## 8. Responsibilities

a. **USTRANSCOM manages the DOD common-use container system** as the DOD single manager for transportation. USTRANSCOM controls all containers transiting the DTS across the range of military operations.

b. **MTMC manages both the DOD common-use container fleet and the Army-owned CADS fleet** by authorizing, accounting, tracking, positioning and accomplishing depot level repair. MTMC maintains the ISO register for all DOD containers and tracks commercial containers used for movement of unit equipment and sustainment cargo needed during deployment and redeployment.

c. **DOD and/or Service components manage component-owned containers** necessary for mission accomplishment within their respective Service.

d. **User activities**, i.e., installations, depots, ports, units, and supply points **are responsible for proper maintenance and repair** at the organizational (user) level while common-use or CADS containers are in their possession.

## 9. Funding

a. **Funding authority** for acquisition, maintenance or repair, and disposal of DOD-owned common-use and CADS containers used in peacetime operations **will be in the MTMC portion of the defense business operations fund-transportation (DBOF-T) budget**. However, funding authority for strategic mobility and/or surge containers will be Army-appropriated funds (Operations and Maintenance) for CADS containers and pro rata Service appropriated funds for DOD-owned common-use containers.

b. **Funding for maintenance, repair, and replacement** of Service-owned containers is programmed through the applicable Service and includes acquisition through disposal.

c. **Funding for organization (user) maintenance** for common-use and CADS containers is programmed by those activities that receive and ship cargo in these containers. MTMC will reimburse activities through resource management channels once repairs are accomplished.

d. **Funding for depot-level repair** for DOD common-use and CADS containers used in peacetime operations will be in the MTMC portion of the DBOF-T budget, with reimbursement through port handling rates. However, funding for strategic mobility and/ or surge containers will be Army-appropriated funds for CADS containers and pro rata Service appropriate funds for DOD common-use containers.

e. **Funding for all container inspections** is the responsibility of all activities that receive and/or ship containerized cargo.

## 10. Maintenance

a. **Common-use and CADS Containers**

- **Maintenance and/or repair at organization (user) level.** Activities possessing containers when deficiencies are noted are responsible for coordinating with MTMC to ensure maintenance and/or repair is performed to acceptable standards.
- **Maintenance and/or repair above organizational level.** MTMC will arrange maintenance and/or repair or issue disposal instructions to the activity possessing the container.

b. **Component-owned containers** are maintained, repaired, and inspected to ensure that they meet International Safe Container Act of 1980 (46 U.S.C. app. 1501 - 1507) standards promulgated in 49 CFR 451-453 and international maritime dangerous goods (IMDG) standards promulgated in 49 CFR 176, as required, for serviceability of containers.

c. **Container Inspection Handbook for Commercial and Military Intermodal Containers, MLHDBK 138A** provides inspection criteria for visually examining DOD-owned or leased containers which will carry DOD materiel. Following the criteria and procedures contained therein will enable certified personnel to identify containers that are serviceable and safe for loading and unloading.

## 11. Maintenance Expenditure Limits (MELs)

**MELs are maximum dollar amounts that can be spent for one-time repair to return a container to fully serviceable condition.** MELs for MILVANs are identified in Army Technical Bulletin 43-0002-40. MELs for DOD-owned common-use and CADS commercial containers will not exceed 65 percent of acquisition cost. DOD components will establish MELs for all their containers.

## 12. Inventories

a. **DOD-wide container inventories are conducted on an annual basis** upon direction of the Container Fleet Division (CFD), headquarters (HQ) MTMC, Eastern Area. This inventory is used to maintain the DOD ISO container register. For the CADS fleet, this inventory will be used to verify property accounting and financial records as well as external reporting requirements.

b. **The US Department of Transportation's Maritime Administration (MARAD) publishes an annual report entitled "Inventory of American Intermodal Equipment,"** that identifies most quantities and types of intermodal equipment (containers and/or chassis) controlled by US-flag marine carriers (ship operating companies) and container leasing companies operation in the United States. Distribution for this publication can be obtained by writing to Maritime Administration, Office of Port and Intermodal Development (MAR-810), 400 Seventh Street SW, Washington, D.C., 20590. Information may also be obtained through the MARLineSpike Bulletin Board at 202-366-8505 or MARAD's World Wide Web Internet home page URL of http://MARAD.DOT.GOV.

c. Services are responsible for verifying Service-owned containers on property records within the component.

## 13. Containers Lost, Damaged or Destroyed

a. **Common-Use and CADS Containers.** Containers which cannot be located and/or accounted for during the inventory require the initiation of a property adjustment document. A property adjustment document is defined as a report of survey and/or Transportation Discrepancy Report (SF 361). The Commander, HQ MTMC, Eastern Area, is the approving authority for property adjustment documents.

b. **Component-owned containers** lost, damaged, or destroyed will be accounted for and adjusted as directed by a competent component authority.

c. During joint operations, **geographic combatant commanders are responsible for containers in their AOR**. Containers should not be used for purposes for which they are not intended (i.e., bunkers, shower stalls, shelters). Containers should be retrograded from forward areas to marshalling areas near seaports for integration back into the DTS.

## SECTION D. TRANSPORTATION POLICIES AND PROCEDURES SUPPORTING DOD ITV CAPABILITY

### 14. DOD Transportation Policy

**DOD Transportation Policy requires shippers of cargo to generate transportation information in accordance with procedures established in DOD Transportation Regulations**, (e.g., MILSTAMP and DTR). Joint Pub 4.0, "Doctrine for Logistic Support of Joint Operations," established the requirement that MILSTAMP applies. DOD 4500.32-R "MILSTAMP," prescribes standard formats for the electronic exchange of transportation data between the government and industry transportation community. MILSTAMP includes a supplement of standard electronic data interchange transactions developed jointly by industry and government.

### 15. Transportation Automated Information Systems (TAIS)

**TAIS**, developed and operated by the Services, Defense Logistics Agency and USTRANSCOM Transportation Component Commands, are fully dependent on data standardization. ITV of containers and their contents is a by-product of source-generated data from TAIS.

### 16. USTRANSCOM's Global Transportation Network (GTN)

USTRANSCOM's **GTN** is the DOD ITV backbone of the DOD Total Asset Visibility Program. GTN is totally reliant on standard transportation data emanating from TAIS under prescribed MILSTAMP procedures. ITV is significantly increased with the use of standard transportation data. Geographic combatant commanders should emphasize adherence to MILSTAMP procedures by their Service component commands and supporting units for documenting all cargo deploying and redeploying during joint operations.

### 17. Movement Reporting

Common-use and CADS containers transiting DTS are reported to the CFD upon receipt and/or shipment of the container. They will be reported IAW DOD Regulation 4500.XX-R, "Management and Control of the DOD Intermodal Container System," (draft).

Intentionally Blank

# CHAPTER V
## PLANNING CONTAINER OPERATIONS

*"It is no great matter to change tactical plans in a hurry and to send troops off in new directions. But adjusting supply plans to the altered tactical scheme is far more difficult."*

**General Walter Bedell Smith, USA**

## SECTION A. DELIBERATE PLANNING

### 1. Planning

Effective and efficient use of intermodal containers requires that **all aspects** (i.e., stuffing, deployment, reception, onward movement, unstuffing, distribution, force structure) **of container operations be factored into plans** developed to support the joint force commander's (JFC's) OPLAN and/ or operation order concept of operations and logistical support.

a. **Planning and Prioritizing of Intermodal Resources**

- Intermodal resources are finite in number, and **their use should be prioritized during the deliberate and crisis action planning processes**. Predesignating containerships for movement of ammunition and other sustainment supplies as well as establishing priority use of 20-foot intermodal containers for ammunition movement are two examples of planning actions aimed at ensuring the effective and efficient use of intermodal resources in support of DOD and national security objectives.

- During deliberate planning, all unit equipment, sustainment, and resupply cargo suitable for containerization must be **identified and appropriately coded** for inclusion in the OPLAN TPFDD consistent with in-theater infrastructure capabilities and the geographic combatant commander's concept of operations. Guidance for the proper application (and listing) of codes for the container movement of cargo in the TPFDD tracked in the Joint Operation Planning and Execution System (JOPES) is contained in the Joint Pub 5-03 series (currently being revised for publication as the Chairman of the Joint Chiefs of Staff Instruction 3122 series). Proper use of the Cargo Category Codes and of the Discharge Constraint Codes allows for the accurate portrayal of the size of containers needed for moving all types of cargoes and if there are constraints at a designated SPOD based on container handling equipment.

- Containerships and intermodal systems can **improve closure** of CS and CSS forces when surge RO/RO capability is insufficient. **Closure profiles** using containerships for movement of unit equipment should be made available to the supported CINC during the deliberate planning process, particularly when lift shortfalls for moving unit equipment are identified.

- Another objective of factoring in containerization during planning is to **obtain maximum effectiveness** in wartime and **cost benefit and efficiency** in peacetime while meeting CINC and/ or customer required delivery dates.

b. **A goal of intermodalism and the use of intermodal containers is to improve utilization of strategic lift assets** to make

effective use of the large, fast commercial intermodal transportation system that is available on a day-to-day basis. DOD readiness to use these systems is critical to provide a rapid, continuous flow of cargo from shipper to receiver in support of DOD and national security objectives. Containers will be used in peacetime to train for war, to meet peacetime transportation requirements, and to reduce transportation costs.

c. **Maximum benefit and efficiency can be achieved** by the Department of Defense when container-compatible cargo is loaded into containers at or as near to the cargo origin as practical and delivered as far forward in-theater as practical.

d. **National transportation policy requires that the Department of Defense use existing commercial transportation equipment to the maximum extent possible.** Commercial intermodal container liner service will be the primary means used to ship resupply and sustainment cargo. Service-owned or leased containers will normally be used to ship accompanying supplies and certain UE in support of deploying forces. Use of Service-owned or leased containers to move these type of items will help the Services maintain better control of these assets and allow for the use of these containers to support storage and distribution requirements in a theater of operation. Commercial containers must be unstuffed and returned expeditiously to the DTS to support continued DOD and industry shipping requirements. Commercial containers will be used to ship accompanying supplies and UE when Service-owned containers are not available. **When DOD-owned, Service-owned or leased containers are planned to be used, the following factors must be considered:**

- **Availability and location** of DOD-owned, Service-owned and commercial containers.
- **Time and resources** required for positioning DOD-owned, Service-owned commercial containers and related transportation equipment (i.e., CHE) at stuffing points.
- **Origin outload capability** and capability of seaports of embarkation and debarkation.
- **Theater infrastructure** for reception and onward movement, storage, and port throughput capabilities.
- The **force structure** that the supported commander is provided to conduct the operation.

e. When resupply and/or sustainment cargo is not sufficient at the source for efficient container stuffing, **it can either be forwarded to a Defense Logistics Agency (DLA) or Service-operated container consolidation point or depot, or shipped to a military ocean terminal** as indicated by the MTMC routing authority for Release Unit Shipments, or as prescribed by DOD 4500.32-R, "MILSTAMP," Volume 1, Chapter 2, Section B, "Procedures."

- **Release Unit Shipments.** A unit of shipment of a specific commodity, weight, size or mode which requires an **export release** from the appropriate authority shown in Figure V-1, i.e., ocean cargo clearance authority (OCCA), water clearance authority (WCA), or air clearance authority, before shipment.
- **Less-Than-Release Unit Shipments.** A shipment unit that can be shipped without requiring an export release from the appropriate authority.

f. **Effective logistic support will require the efficient movement and handling of containers throughout the transportation system.** Shipping activities and supporting

**AUTHORITIES PROVIDING EXPORT RELEASES FOR RELEASE UNIT SHIPMENTS**

**OCEAN CARGO CLEARANCE AUTHORITY**

**The Military Traffic Management Command activity which books DOD-sponsored cargo for sea movement, performs related contract administration, and accomplishes export/import surface traffic management functions for DOD cargo moving within the Defense Transportation System.**

**WATER CLEARANCE AUTHORITY**

**The DOD activity which controls and monitors the flow of cargo into and/or out of ocean terminals.**

**AIR CLEARANCE AUTHORITY**

**A Service activity which controls and monitors the flow of cargo into and/or out of the airlift system.**

**Figure V-1. Authorities Providing Export Releases for Release Unit Shipments**

units must take into account, to the maximum extent possible, factors such as cargo hold time, single or multiple consignee delivery, configuration and density of cargo, and availability of specific size and types of containers.

g. **Deliberate planning requires continuous updating, evaluation, and analysis of information and intelligence.** In the plan development phase, the combatant commander's and the Service components' staffs develop a **detailed transportation-feasible flow**. This transportation-feasible flow is developed for the movement of resources from origin into the theater of operations to support the concept of operations and logistical support plan.

h. **Planning Theater Container Control.** Although the operation of water ports and onward movement of supplies are normally managed by the Army component, any Service component may be designated by the combatant commander to perform this mission to facilitate the movement of supplies. **Containers arriving in-theater must be efficiently discharged and expeditiously moved forward where supplies and equipment are needed.** Service components must plan for and be fully aware of theater reception and onward movement plans to include container and pallet management and control. **Some factors to consider during planning follow.**

- **Control of containers** must be established at an echelon that permits surveillance of the overall container operation in the theater, centralized management of all container assets, and decentralized execution. In order to effectively and efficiently support the arrival, off-load, and inland management and movement of containers, traditional arrival and reception support organizations and combat service support installations and operations may need to

be modified or augmented to include specialized materials handling and transportation equipment and control functions.

- **Container Control Activity.** Normally the responsibility of the Army component in the theater of operations, may be established to develop and monitor the execution of detailed policies and procedures for container service and support theater-wide. **The CCA updates and maintains information on the location and status of all containers** in order to assess requirements for commercial containers needed to efficiently distribute supplies and equipment within the theater of operations.

- **Jointly staffed Container Control Elements (CCE), responsible for sorting and moving inland of containerized cargo**, may be established. These container control elements operate from container control sites (CCSs) which are established to receive, identify, direct inland distribution, and retrograde containers. CCSs are locations where MHE/CHE and vehicles deliver containers from a port, pier, or beach area to the CCE for sorting and movement inland.

- If a situation does not allow the off-loading of containers at a port facility, a **LOTS operation** may be planned. Refer to Chapter VI, "Container Operations," Section E, "Amphibious and Logistics Over-the-Shore Operations," for a complete discussion of container handling in amphibious and LOTS operations.

- **Retrograde of Containers.** All plans should include policies and procedures for retrograde of empty containers. The supported commander is responsible for all containers within the AOR. There should be provisions for a **retrograde storage area (RSA)** for containers and pallets near sea and aerial ports to facilitate movement out of the theater of operations or reuse within the theater should the need arise. Transporters returning from forward areas with empty containers are directed to the RSA.

- **Transportation Modes.** The movement of containers within the theater of operations will challenge available transportation resources; therefore, plans for using both military and commercial assets must be developed. **The primary transportation modes available for containerized cargo and equipment are rail and organic or commercial motor transport.** If an inland waterway exists, then lighterage will be used to move containers inland.

  •• **Rail, when available, is the most cost effective and expeditious means** of moving large quantities of containers when inland waterway infrastructure does not exist from the port of operations to a CCS or general supply support area (GSSA). The CCS and GSSA, depending upon the operation, may be co-located. Of all modes, rail is the least affected by adverse weather conditions. Virtually any ISO/ANSI container can be transported by rail; however, pierside access by railcar is often not available or is restrictive.

  •• **Rail movement requires detailed planning and preparation** by the unit being transported. Coordination is necessary between the moving unit, traffic management office, rail facility, movement control center, and rail operations team from supporting beach and terminal operations units. Continuous, close coordination is necessary among all involved agencies

to ensure an effective, efficient, and safe rail operation.

•• Depending on availability of host-nation infrastructure, motor transport may not be the primary surface mode within the theater of operations. Instead, **rail or inland waterway may be used heavily in the AOR**. Organic or commercial motor transport may be used throughout the theater of operations for the movement of containers. **Motor transport may be the primary mode of transportation forward of the GSSA** to the direct supply support activities and beyond. Motor transport is the most flexible mode for the movement of containers and will be employed in line haul, local haul, terminal clearance, and transfer operations.

- **Container Distribution**

•• **Containers will be moved as far forward in the theater of operations as practical.** The capability of supporting activities with regard to availability of MHE/CHE and transporters to receive, handle, and distribute containerized supplies to supported units in a particular operational environment will be a key factor.

•• **GSSAs must be fully equipped with suitable MHE/CHE.** Depending upon their mission, functions, and locations, GSSAs must be able to receive supplies shipped in containers up to 40 feet in length. Although the 20-foot container is the preferred size, during large scale contingencies a combination of 20-foot and 40-foot containers is inevitable. Generally, containerized Class V, UE, and initial accompanying and sustainment supplies will arrive in 20-foot containers, while resupply cargo will generally arrive in 40-foot containers. In essence, **GSSAs must plan for and have the capability to handle both size containers**. The quantity of supplies shipped in any size container should be planned so that it does not exceed the capability of GSSAs to receive and store the material.

i. **Time-Phased Force and Deployment Data. Shipment of containerized cargo must be identified in OPLANs.** Joint Operation Planning and Execution System (JOPES) and TPFDD input procedures must be strictly followed.

- **TPFDD provides detailed information** that identifies materiel that can be containerized for the purpose of determining type and sourcing of appropriate strategic lift. **This data is used to enhance planning by receiving and shipping activities.** The inclusion of accurate required data in the TPFDD allows USTRANSCOM and its TCCs (AMC, MSC, and MTMC) to accurately assess the supported commander's strategic mobility requirements.

- **The TCCs**, in coordination with USTRANSCOM, the supported commander, and the component force commanders during the deliberate planning process, **review and apply apportioned lift support to meet these requirements**. Failure to properly provide or identify containerizable cargo requirements will result in inadequate or inefficient sourcing of required lift.

- Additional guidance is contained in Joint Pub 1-03.21, "Joint Operation Planning and Execution System Reporting Structure (JOPESREP)," the Joint Pub 5-03 Series, "Joint Operation Planning and Execution System (JOPES)," and the Logistics and Mobility Supplements to the Joint Strategic Capabilities Plan (JSCP).

## SECTION B. FORCE STRUCTURE FOR CONTAINER HANDLING

### 2. Force Structure

**Container movement and handling requires specialized equipment.** Most critical to container operations is the 50,000 pound rough terrain container handler; the 4,000 pound (low mast) rough terrain fork lift and the newly procured All Terrain Lifter, Articulated System. **The following is a list of container handling equipment and the units that are authorized them within the Services.**

a. **Army.** The primary units within the Army with organic MHE/CHE are Supply and Transportation Companies. **The list of units with organic container handling equipment is as follows:**

- **Ordnance Company, Ammunition (PLS/MOADS) (Corps Storage Area).** TOE: 09433L0

  •• **Mission:** To establish and operate an ammunition supply facility engaged in the receipt, storage, re-warehousing, combat configuration, and issue of conventional ammunition utilizing the PLS.

  •• Unit has **capability to provide** 5,681 short tons (S/T) per 24-hour day as follows: (1) **Receive:** 1,420 S/T palletized breakbulk ammunition on theater semitrailers from the port; (2) **Receive:** 1,420 S/T palletized breakbulk ammunition PLS flatracks uploaded on theater semitrailers from the Theater Storage Area (TSA); (3) **Combat Configure and Issue:** 2,841 S/T Ammunition loaded on PLS flatracks.

- **Ordnance Company, Ammunition, Conventional, GS.** TOE: 09488L0.

  •• **Mission:** To establish and operate an ammunition supply facility for the receipt, storage, re-warehousing, and issue of conventional ammunition.

  •• Unit has **capability to provide** the following lift capabilities assuming a mix of 50% containerized and 50% breakbulk ammunition (at D+60): (1) **Receive:** 1,232 S/T; (2) **Re-warehouse:** 1,232 S/T; (3) **Issue:** 1,232 S/T; (4) **Combination of the Three:** 3,696 S/T.

- **Ordnance Company, Ammunition (PLS/MOADS)(TSA).** TOE: 09633L0.

  •• **Mission:** To establish and operate an ammunition supply facility engaged in the receipt, storage, re-warehousing, container unstuffing, and issue of conventional ammunition utilizing the PLS.

  •• Unit has **capability to provide** 5,682 S/T per 24-hour day as follows: (1) **Receive:** 1,894 S/T; (2) **Re-warehouse:** 1,894 S/T; (3) **Issue:** 1,894 S/T.

- **Heavy Crane Platoon.** TOE: 55560LE00.

  •• **Mission:** To augment Transportation Terminal Service Units.

  •• **Unit provides the following services and capabilities:** (1) Loading/unloading of cargo from ships or barges; (2) Personnel and equipment to handle 400 containers per day in a fixed port operation; and (3) Personnel and equipment to handle 200 containers per day in a LOTS operation.

- **Transportation Cargo Transfer Company.** TOE: 55817L1.

  •• **Mission:** To transship cargo at air, sea, rail, and motor terminals.

•• **Unit provides the following services and capabilities:** (1) Depending on configuration, can operate up to three separate terminals on a 24-hour basis. Each terminal can transship 1,000 S/T of breakbulk cargo or 150 containers per day for a total of 3,000 S/T of breakbulk cargo or 450 containers daily or a mix thereof; (2) Redocuments transshipped cargo or containers, as required; and (3) Limited capability to stuff and unstuff containers.

- **Transportation Terminal Service Company (Breakbulk and Container).** TOE: 55827L1.

•• **Mission:** To discharge, backload, and transship breakbulk and containerized cargo at water terminals located at fixed ports or in LOTS operations.

•• On a two shift basis with 75% operational availability of all mission equipment, **this unit is capable of:** (1) **In a LOTS operation:** (a) When supported by a heavy crane platoon, TOE 55560LE, discharging 200 containers or backloading at the same rate, or simultaneously discharging 100 containers and backloading 100 containers; (b) Discharging 1600 S/T of breakbulk cargo or backloading at the same rate, or simultaneously discharging 800 S/T of breakbulk cargo and backloading 800 S/T; and (c) Sorting breakbulk and containers by designation, loading breakbulk cargo and containers from the marshalling yards on land transportation, and performing limited stuffing and unstuffing of containers. (2) **In a fixed port operation:** (a) When supported by a heavy crane platoon, TOE 55560LE, discharging 400 containers or backloading at the same rate, or simultaneously discharging 200 containers and backloading 200 containers; (b) Discharging 2500 S/T of breakbulk cargo or backloading at the same rate, or simultaneously discharging 1250 S/T of breakbulk cargo and backloading 1250 S/T; (c) Sorting breakbulk and containers by designation, loading breakbulk cargo and containers from the marshalling yards on land transportation, and performing limited stuffing and unstuffing of containers; (d) Receiving and processing containers for retrograde; and (e) Providing limited in-transit storage.

- **Transportation Medium Truck Company.** TOE: 55727L1.

•• **Mission:** To provide transportation for the movement of containerized, noncontainerized, palletized, dry and/or refrigerated containerized cargo and bulk water products, when organized under TOE 55727L200.

•• Figure V-2 shows **unit capabilities** assuming 75% task vehicle availability, two shift operation, four round trips per day (two per operating shift) in local hauls or two round trips per day (one operation per operating shift) in line hauls.

- **Transportation Medium Truck Company.** TOE: 55728L1.

•• **Mission:** To provide transportation for the movement of both dry and refrigerated containerized cargo, general noncontainerized cargo, bulk water, and bulk petroleum products.

•• With a 75% task vehicle availability this unit, operating on a two-shift basis, making four round trips per day (two per operating shift) in local hauls or two hauls, is **capable of transporting the following:** (1) **Local Hauls:** 180 20-foot containers; and (2) **Line Hauls:** 90 20-foot containers.

| Medium Truck Co. Capability | | | |
|---|---|---|---|
| Cargo | Transporter Capacity* | Local Haul Capability/day | Line Haul Capability/day |
| 40' Container | 34 S/T | 180 FEU | 180 FEU |
| 20' Container | 34 S/T | 360 FEU | 180 TEU |
| Breakbulk | 22 S/T | 3,950 S/T | 1,980 S/T |
| Water | 4,750 GAL | 855 K GAL | 428K GAL |
| *** NOTE: In emergencies, 50 seated passengers may be transported per semitrailer.** | | | |

**Figure V-2. Medium Truck Company Capability**

- **Transportation Light Medium Truck Company.** TOE: 55719L1.

  •• **Mission:** To provide transportation for the movement of noncontainerized cargo and personnel.

  •• This unit is authorized twenty-five 22 1/2 ton trailers, which gives it some 20-foot container **carrying capacity**.

b. **Marine Corps**

- There are **three types of units** in the Marine air-ground task force (MAGTF) structure that have the capability to handle containers: **combat service support element (CSSE) (landing support unit)**, **CSSE (motor transport unit)**, and **aviation combat element (ACE) (Marine Wing Support Squadron [MWSS] and/or engineer unit)**.

- Depending on the concept of employment, a **landing support detachment** has the container handling capability that can occupy the entire beach support area or port. They also could be required to augment a section of the MWSS. The container handling capability of the **ACE** could, most likely, be fully committed to handling the large volume of Class V (A) ordnance containers and aviation mobile maintenance facilities at the ACE's forward operations base. **Motor transport sections** would provide the MAGTF's container transportation support between the beach or port and container management areas as well as unit distribution.

- Container handling equipment is distinguished by its **capability to engage dimensional standardized ISO loads**. The RTCH is the only dedicated container handler in the current Marine Corps inventory.

c. **Navy.** There are three different types of Navy combat logistics units that have full or partial capability to handle containers. The majority of these units are in the United States Navy Reserve (USNR): Cargo Handling Battalions (CHB) - 86% USNR; Freight Terminal Units (FTU) - 100% USNR; and Navy Overseas Air Cargo Terminal (NOACT) - 99% USNR.

- CHBs provide a wide spectrum of ship-loading and off-loading services, limited air cargo loading and off-loading of services, and cargo processing functions, to include documentation support. These units may operate in a stand alone capacity or with augmentation from the US Marine Corps or local nationals. Their responsibilities can be tailored to

perform a wide range of duties, from stevedoring to full service port operations. When conducting an in-stream off-load, augmentation is provided by a Navy Beach Group. When augmented with personnel from the supported unit or activity, a CHB can achieve a ship discharge rate of approximately 2880 measurement tons (MTs) per pier side, and approximately 1920 MTs per day discharge rate instream. If a CHB is not augmented, the discharge rate will be reduced by fifty percent.

- FTUs operate a transshipment and routing facility with local delivery support at an Advanced Logistics Support Site (ALSS) or Forward Logistics Site (FLS), and receive and strip containers and sort, prioritize, package, and document all classes of material for further transportation by land, sea, and air modes. The FTU provides a commercial handling capability of up to 30,000 lbs. The FTU has a total throughput capability of 300,000 lbs per day, and can provide total in-transit visibility to the GTN via the Worldwide Port System (WPS).

- NOACT units operate an air cargo terminal in an ALSS or FLS environment. This includes receipt, documentation, and transshipment of passengers, mail, and cargo. NOACT units provide access to the GTN via application of the US Air Force Remote Consolidated Aerial Port System. NOACT units provide commercial container handling capability up to 10,000 lbs.

d. **Air Force.** Several OCONUS installations possess limited organic container handling capability (e.g., sideloaders, 50,000 pound RTCHs/forklifts, etc.). The majority of **Air Mobility Command fixed aerial ports** are equipped with either a 35-ton capacity overhead crane or a 50,000 pound capacity forklift to handle up to 40-foot containers for air shipment.

## SECTION C. SIZING REQUIREMENTS FOR 463L PALLETS AND 20-FOOT EQUIVALENT UNITS

### 3. Sizing Requirements

The determination of actual requirements for 463L pallets and 20-foot ISO containers ultimately depends on factors such as load planning, height, length, width, and weight of the type of cargo to be transported. For planning purposes, **the following information and procedures have been extracted from various sources of information and are provided as a means to approximate pallet and container requirements**:

a. **Airlift**

- **463L pallet requirements for general cargo.**

  •• Load plan cargo (less rolling stock) to arrive at the total number of 463L pallet and net sets required.

  •• If detailed load planning is not possible, determine the total weight (lbs) of bulk cargo (less rolling stock), determine the total weight (lbs) of outsized cargo (less rolling stock), multiply the outsized cargo weight by 20 percent (.20) and add it to the bulk weight. Divide the total by 4,000 pounds to get the total pallet and net sets required.

- **463L pallet requirements for passengers' accompanying baggage.**

  •• Determine number of passengers and/or troops.

•• Calculating the number of 463L pallets needed to move a specific quantity of troops is dependent upon the quantity of gear and/or baggage that is to be deployed per individual. Combat equipped troops may deploy with more than twice the amount of gear and/or baggage than troops for training exercises. After calculating the number of pallets needed based on both the total quantity of baggage to be moved and the maximum quantity of baggage per pallet, an additional 463L pallet should be calculated if 1/2 or more of an individual pallet's baggage capability is necessary.

b. **Surface**

- **Estimating 20-foot ISO container requirements for unit equipment.** There is no standard formula for calculating container requirements for unit equipment due to the diversity of equipment and composition of various units within the Services. However, MTMC publishes a Deployment Planning Guide (MTMCTEA Reference 94-700-5, Sep 94) which provides estimates of the numbers of containers required for Army combat and combat support/combat service support units. Similarly, the Marine Corps Capabilities Plan provides notional container requirements for a Marine Expeditionary Brigade-sized unit and Marine Expeditionary Force.

- **Estimating 20-foot container requirements for ammunition (Class V).**

  •• Determine total weight (S/T) of ammunition requirement.

  •• Calculate 20-foot container requirement as 20-foot containers required equals total weight (S/T) divided by 13.9.

- **Estimating 20-foot/40-foot container requirements for resupply/sustainment (excluding Class VII).**

  •• Determine total weight (S/T) of resupply or sustainment requirement.

  •• Calculate 20-/40-foot requirement as 20-/40-foot containers required equals total weight (S/T) divided by 15 or 23 respectively. This is based on Operations DESERT SHIELD and DESERT STORM data.

# CHAPTER VI
## CONTAINER OPERATIONS

*"Logistics considerations belong not only in the highest echelons of military planning during the process of preparation for war and for specific wartime operations, but may well become the controlling element with relation to timing and successful operation."*

**Vice Admiral Oscar C. Badger, USN**

## SECTION A. UNIT DEPLOYMENT OPERATIONS

### 1. Introduction

The preferred method for unit deployment by sea is to use **Fast Sealift Ships** and **RO/RO ships**. However, the limited availability of RO/RO ships and the dominance of containerships in the US flag, US-owned, and world merchant fleets requires that the Services maintain the capability to deploy unit equipment by containerships using both **containers** and **commercial or military flatracks**. USTRANSCOM, as the single manager for the Defense Transportation System, must provide DOD components with **access to the full range of intermodal capabilities** that the commercial transportation industry offers to support deployment. Finally, geographic combatant commanders must be prepared to **prioritize the force structure** necessary to support container reception, onward movement, and retrograde or ensure that adequate host-nation support is available.

### 2. Unit Container Operations

When deploying unit equipment (including vehicles) **advantages and disadvantages to the unit must be considered**; however, local inconveniences will not override the primary mission of all supporting commands to meet the required delivery dates established by the supported CINC's operation order, TPFDD, and concept of operations and logistical support.

a. All units have equipment that can move in containers, but not all units can move all their equipment in containers. **The key to a successful combination RO/RO-containership operation is in the early identification of units** with high percentages of equipment that can be deployed in containers or flatracks prior to selecting those units for deployment by containerships.

b. The **advantages** for deploying units using intermodal container systems and containerships lie primarily in **movement to and operations at the SPOEs and SPODs**. Intermodal systems and containers and/or flatracks can **speed handling of cargo through seaports** by minimizing the handling of each piece of cargo and time spent loading and/or unloading the unit's equipment to and/or from the ship. Containerization also **enhances security** of the shipment and **reduces public visibility** of a unit move or deployment.

c. The **disadvantages** lie in potential **increased equipment preparation time** at the unit installation and the potential for **increased installation support to provide CHE/MHE**. Vehicles must be loaded, secured, and prepared in a manner different from RO/RO shipping. Loading docks, CHE/MHE, and cargo documentation are considerations. However, time spent at unit installations is more than compensated for by savings in vessel load and/or discharge times at SPOEs/SPODs. Field exercises have shown that unstuffing vehicles in a theater of operations requires minimal time and personnel training.

## 3. Execution Planning for Deployment

a. **Determining Requirements. Planning begins with the unit movement officer who develops the unit movement plan.** This plan must include requirements for containers to move unit equipment that cannot be shipped as a secondary load on deploying vehicles and trailers that will be stowed in RO/RO ships. These containers will be stowed on the weatherdecks of the RO/RO ships or in container cells on containerships and accompany unit equipment. If directed during the deployment to also move unit vehicles in containers, the unit movement officer will develop a movement plan that will accommodate this type of movement. **Planning requires familiarity with types of containers.** Refer to Chapter II, "Intermodal Equipment," for data and information on intermodal container types.

- **Container Planning Factors.** The standard container for deployment is the ISO 20-foot container measuring 8' x 8' x 20' or 8' x 8.5' x 20'. However, **containers come in a variety of lengths.** A 40-foot container is the equivalent of two standard 20-foot containers, and may be delivered in lieu of the two standard containers. **Weight restrictions vary,** but unless very dense cargo is loaded (such as ammunition), the maximum weight allowance of a container will rarely be exceeded.

- **Blocking and Bracing. During multimodal transportation,** containerized cargo may momentarily experience extreme changes in physical forces which could shift or damage cargo. To preclude such instances, cargo placed in containers must be secured. Therefore, multimodal transportation incorporates collectively the most stringent load conditions to which containers will be exposed during shipment. **The unit movement officer must plan to have adequate blocking and bracing material on hand before loading the containers.** See the US Department of Transportation publication "A Shippers' Guide to Stowage of Cargo in Marine Containers." Additionally, specific detailed guidance for securing vehicles in containers can be found in MTMCTEA Reference 95-55-23, "Containerization of Military Vehicles and Equipment."

b. **Planning the Move**

- **Units must determine what equipment can be containerized or moved on commercial and/or military flatracks.** If the mission includes drawing pre-positioned equipment, it will be necessary to plan for the movement of equipment not pre-positioned which must accompany the troops. **Through its surface components, MTMC and MSC, USTRANSCOM can provide assistance to unit commanders** during execution planning to facilitate deployment by intermodal container systems. Additionally, **MSC can contract to provide commercial door-to-door service** for combat support and/or combat service support units, but this capability may not be feasible early in an operation. This type of service can greatly decrease the stress on the limited RO/RO ships being used to move combat forces during initial surge operations.

- Army Field Manuals (FM) 100-17, "Mobilization, Deployment, Redeployment, Demobilization," FM 55-65, "Strategic Deployment," and Fleet Marine Force Reference Publication (FMFRP) 4-17, "Intermodel Containerization in the MAGTF," provide specific deployment planning guidance and information.

- **Automated Unit Equipment Lists (AUEL) must be accurate** to ensure that viable load plans are developed and that the appropriate containers and transporters are ordered. When load planning for containerized deployment, dimensions for unit equipment must be accurate. The AUEL includes all of the unit's equipment. Since units rarely deploy with all authorized equipment, they generate a Deployable Equipment List (DEL) of items they are moving for each specific deployment. This is to preclude the overcommitment of lift. No unit may deploy with equipment not officially included on the DEL.

## 4. Container Stuffing Operations

a. **Packing, Loading, Blocking, and Bracing**

- **General Planning Considerations**

  •• **Equipment may have to be processed for containerization.** Due to size limitations, some equipment may have to be disassembled or reduced prior to stuffing into a container. If the equipment is to be in usable condition upon arrival in the AOR, do not dismantle equipment beyond functional repair or assembly by forces at receiving location.

  •• **Movement planners must plan each container load for ease of unloading or unstuffing at destination.** Materiel that is required first must be loaded last. If cargo for more than one unit is loaded into a container, the cargo for each unit should be separated by partitions, dividers, paper or plastic sheet.

  •• **Proper cargo documentation** IAW DOD 4500.32-R, "MILSTAMP" **is mandatory and critical** for in-transit visibility during movement.

- **Machinery and Heavy End Items**

  •• **These loads must be carefully preplanned.** Not only might they be **irregular in shape**, but **high-density components** may reach the weight capacity of the container or the highway limitations imposed by the individual states or countries that the container may have to transit.

  •• **Ensure that heavy cargo is securely braced and blocked on all sides** to prevent any lateral or lengthwise motion, since its concentrated weight will cause major damage if the load shifts.

  •• **All blocking, shoring, and bracing must bear on a structural member of the container** and not on the panel sides of the container alone.

  •• Some heavy cargo requires **dunnage to distribute the weight** over a larger area of the container floor. Use of flatracks may eliminate this requirement.

  •• In some instances, **extremely dense items may need to be lashed or bolted to the container floor**. This should not be done without approval of the carrier.

- **Vehicles. The method of securing vehicles in containers depends on the type and size of the vehicle being shipped.** Many vehicles will have to be reduced in their width and height dimensions in accordance with applicable publications or be loaded on military flatracks that have been loaded in containership cells to form a deck.

  •• **Vehicles should be backed into containers** to expedite unstuffing operations at destination. Smaller

vehicles can be pushed into the container once batteries are disconnected and cables are taped.

•• Once in place inside the container, vehicles should be placed in **gear or park** and the **hand brake set**.

•• Unless otherwise specified in the port call instructions, **fuel tanks must be drained** prior to loading so that the tank is no more than 1/4 full. In an emergency deployment, this requirement may be waived, but prior coordination must be made with MTMC through the installation transportation officer (ITO) before any vehicles are stuffed into containers.

•• Position and nail **chock block assemblies** in front of the front tires and in the back of the back tires. The chock block assemblies prevent forward, rearward, and lateral movement.

•• **Trailers should be backed into the container** with landing legs raised and lunettes placed on shoring nailed to the container floor. Position and nail **chock block assemblies** in the front and rear of one tire on each axle. The chock block assembly prevents forward, rearward, and lateral movement. **Tie-down straps** should be affixed to the front of the trailer, stretched across the lunette, and secured to tie-down rings in the container. Specific detailed guidance for securing vehicles in containers can be found in MTMCTEA Reference 95-55-23, "Containerization of Military Vehicles and Equipment."

b. **Securing and Sealing of Containers.** After each container has been stuffed, **responsible personnel will ensure** that the doors have been securely closed and watertight, a seal has been placed on the container, the seal number has been recorded, and the shipping documents and the proper markings have been placed on the container in accordance with MILSTAMP.

## 5. Container and Cargo Documentation

a. **Container documentation is absolutely essential** to maintain the visibility and identity of the cargo in a container. At the **unit level**, required documentation includes packing lists, transportation control number (TCN), container numbers, and hazardous cargo placarding. At the **installation level**, documentation includes shipping documents and shipping labels and/or placards. See DOD Regulation 4500.32-R, "MILSTAMP" for specific cargo documentation requirements.

b. **National and international regulations**, such as CFR 49 and various standardized agreements and United Nations (UN) regulations covering packaging, labeling compatibility, and manifesting of hazardous goods **must also be followed when loading and documenting containerized shipments**. Personnel will apply one label of the type prescribed by the UN for each individual package within the container to the outside rear door and any required placards to the container. During critical deployments, waivers may be obtained from appropriate DOT authorities.

c. **Unit movement planners must know the actual weight of each loaded container** (payload plus tare weight of the container). Chapter II, "Intermodal Equipment," provides general data for various types of containers.

d. **Address markings are required on all items being shipped.** The format and detailed instructions for the completion of Military Shipment Label (DD Form 1387) are contained in Military Standard (MIL-STD) 129M, "Marking for Shipment and Storage."

e. **Additional Markings.** In addition to address markings, further identification markings are required by CFRs 46 and 49, International Civil Aviation Organization (ICAO) Technical Instruction for the Safe Transport of Dangerous Goods by Air, IMDG, and Military Standard 129 (MIL-STD-129). NOTE: MIL-STD-129 emphasizes that special handling markings are to be used only on those items requiring such handling. **CAUTION: All additional markings must be applicable to package contents.** Special handling markings include the items listed in Figure VI-1.

## 6. Container Booking and Movement to the Seaport

a. **MTMC will determine the method by which the container is transported to the seaport.** It may be by commercial carrier or by military convoy. Unit deployments from inland installations may also be made by rail. When commercial liner door-to-door service is utilized, the intermodal operator will arrange for movement of the container(s) to the port.

b. **Deploying units are port called by MTMC area commands,** and all cargo (including unit-owned containers) are routed to the port by the ITO/Traffic Management Officer (TMO) IAW unit deployment procedures outlined in DOD 4500.9-R, "Defense Transportation Regulation (DTR)," and MILSTAMP. If commercial containers are required for the deployment, they are obtained from MSC as outlined in Chapter IV, "Management and Control of Containers," of this publication.

c. If the unit is moving the container to the seaport, **it will follow state and federal regulations and laws** governing military use of public highways.

d. **The Transportation Coordinator-Automated Command and Control Information**

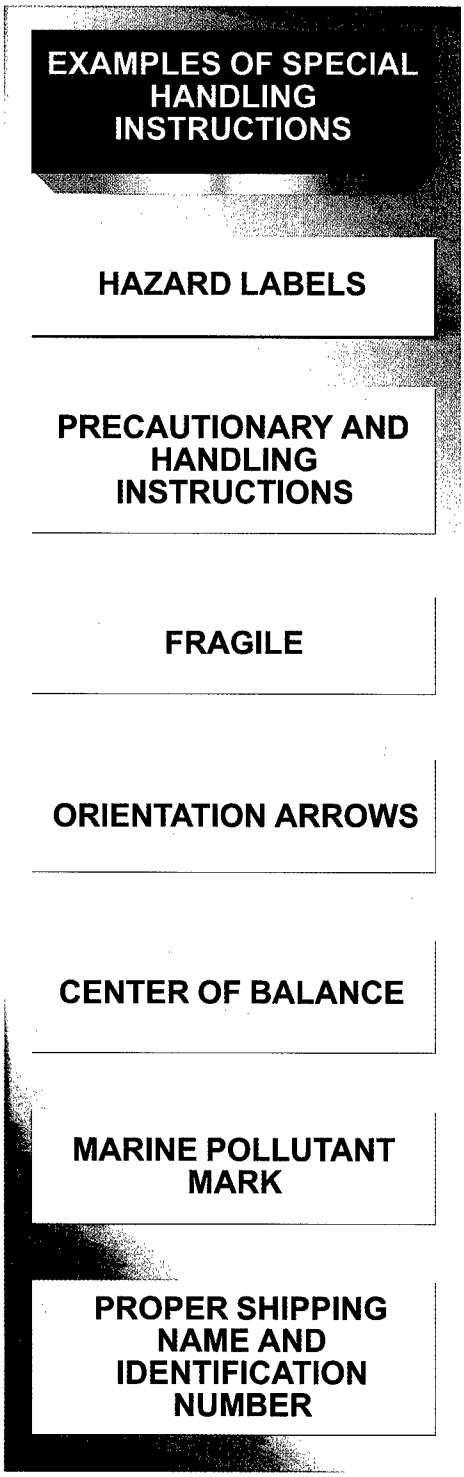


**Figure VI-1. Examples of Special Handling Instructions**

**System (TC-ACCIS) automates most transportation functions associated with deployment of Army units.** TC-ACCIS incorporates state-of-the-art technology in barcode applications and electronic data interchange which is used to plan, load, and document the transport of unit equipment including containers. Data transmitted by TC-ACCIS is used to generate the MILSTAMP Ocean Cargo Manifest that is electronically transmitted to various theater organizations, including the SPOD. (With the joint migration of transportation information management systems, Transportation Coordinators Automated Information for Movement System II [TCAIMS II] IOC FY97 will replace TC ACCIS.) TC ACCIS will support the automated transportation functions of Army units only until replaced by TCAIMS II.

## 7. Concept of Operations for Containerizing Unit Impedimenta

Most deployments require units to load equipment into additional, non-organic, transportation assets. If the unit does not have organic containers and/or quadcons or other standard storage and/or transport containers, the ITO/TMO will make available upon request ISO containers for moving such items. Figure VI-2 outlines the responsibilities for requesting and loading such containers. Experience has shown that not all of these actions are mutually exclusive. In some cases units will assist installation personnel, while in other cases installation personnel will assist units.

a. Unit personnel prestuff containers to the greatest extent possible to reduce loadout time, and are responsible for securing them where necessary. Containers prestuffed with ammunition and explosives must be afforded quantity distance protection IAW DOD 6055.9-STD, "DOD Ammunition and Explosives Safety Standards."

b. Upon receipt of deployment notification, **the ITO/TMO arranges for the positioning of 20-foot ISO container(s)** at the unit motor pools and/or staging areas. Ammunition and explosives must be stuffed into containers at a location that meets quantity distance (QD) requirements of DOD 6055.9-STD.

c. Unit personnel load all possible items from the DEL into or onto other DEL items to reduce overall movement requirement.

d. Unit personnel will then stuff all possible DEL items into organic or unit containers and/or quadcons.

e. Finally, unit personnel will stuff only remaining DEL items, if any, into ITO/TMO-ordered ISO commercial containers. The unit must coordinate with the ITO/TMO for the time, location, and quantity for commercial container delivery.

f. The ITO/TMO, after coordination with the unit, will:

- Arrange with commercial sources for the delivery of container chassis or flatbed trailers, when and where desired;
- Arrange for the loading of stuffed containers, both organic and nonorganic and/or commercial onto chassis and/or flatbeds; and
- Arrange for the **movement** of all unit equipment (including unstuffed rolling stock) to the departure area, staging area, or rail yard **when called forward**.

g. When equipment is loaded onto railcars unit personnel are responsible for proper tie-downs and/or lashings.

h. The ITO/TMO will generally make arrangements for the movement of unit equipment to the SPOE. If rolling stock is

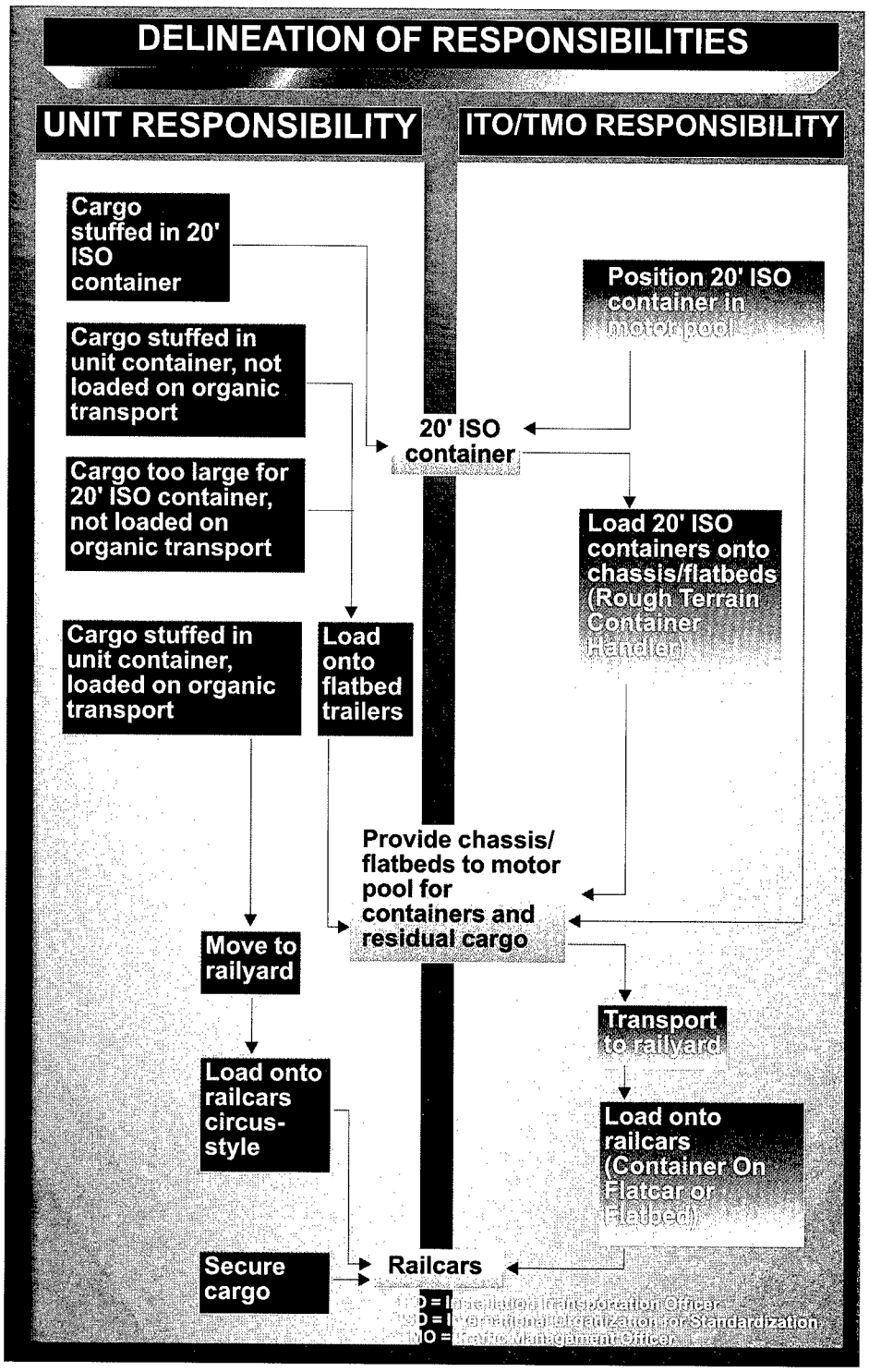


Figure VI-2. Delineation of Responsibilities

not loaded onto railcars but instead self-deploys to the SPOE, unit personnel are required to operate the vehicles.

i. After equipment is turned over to either ITO/TMO personnel or port operating personnel, the equipment will be readied by port operating personnel for overseas shipment. Once loaded on a ship, the intermodal ocean carrier provides or arranges all intermediate services necessary for the delivery of equipment to the theater.

j. Unit liaison officers to the Port Support Activity at the SPOD will coordinate if the unit must provide vehicle drivers for movement of discharged rolling stock to the forward staging area, and if containers are to be unstuffed at the SPOD or moved forward.

k. Responsibility for movement of unit equipment to, and any required unstuffing of containers at, the tactical assembly area **prior** to fall in on equipment must be coordinated with theater activities.

## SECTION B. RESUPPLY AND SUSTAINMENT OPERATIONS

### 8. General

a. **Maximum movement of materiel by containers is the preferred resupply method.** Containers will be stuffed at origin, at the nearest consolidation and containerization point (CCP) or container stuffing activity (CSA), with the two DLA CCPs serving as the primary sustainment consolidation points.

b. The CCPs have evolved to make more complete use of 20- and 40-foot ISO containers, 463L pallets, and the benefits associated with reduced cargo handling. Since most shippers do not regularly generate full container or 463L pallet loads of cargo for shipment direct to receivers, **the CCP provides a means for combining shipments from multiple shippers**. These combined shipments may then be sent directly to single consignees or, by use of stopoffs or breakbulk points, to multiple consignees.

c. **DLA has established two CCPs to consolidate cargo** for onward movement by container or 463L pallet. In addition, MTMC operated CSAs, located at SPOEs, also perform containerization functions for the multitude of loose shipments and excluded cargo arriving at the port.

### 9. Container Consolidation Locations and Capabilities

a. **DLA CCPs** are located at the New Cumberland Depot, Harrisburg, Pennsylvania and the Sharpe Depot, Stockton, California. **MTMC CSAs** are located at the following ports:

- Military Ocean Terminal, Bayonne, New Jersey.
- Fleet Industrial Supply Center, Norfolk, Virginia.
- Gulf Outport, New Orleans, Louisiana.
- Southern California Outport, Compton, California.
- Military Ocean Terminal, Oakland, California.
- Pacific Northwest Outport, Seattle, Washington.

b. **The capabilities of military installations to outload, stuff and receive containers are documented annually** in the DD Form 1726 and provided to MTMC. It includes daily container outload capabilities for peacetime and mobilization. Reports are received from all DLA Distribution Depots, MTMC CSAs and Service designated installations. This data is essential to MTMC

in determining if the capability exists to move materiel from depots through SPOEs in accordance with geographic combatant commanders TPFDDs.

## 10. Forecasting Container Requirements

**During the deliberate planning process, requirements for the containerization of sustainment materiel are developed through the detailed sourcing of operation plans.** Requirements are determined by the **CINCs** and then sourced by the Services and DLA in support of the CINC's concept of operation. **Service item managers** pass requirements to DLA. **DLA** consolidates these requirements and then determines what items can and will be containerized at their two CCPs. **MTMC CSAs** will determine exception items that will be consolidated and containerized at the CSAs.

## 11. Procedures

a. **Receiving for Transshipment**

- **Individual shipments usually arrive at CCPs** accompanied by the appropriate Transportation Control and Movement Document (TCMD) information. At inland CCPs, a copy of the TCMD should be found in a waterproof envelope on the number one box of each shipment unit. The TCMD for shipments arriving at seaport CSAs must be provided ahead of time to the port through the WCA. The CCP/CSA uses any available data and the assistance of the shipper and sponsoring Service to prepare documents for shipments arriving without TCMDs. The CCPs receive automated advance TCMD-type data from shipping depots. This helps them create TCMD data for the pallets they build and ship.

- Upon receipt of inbound trucks or rail cars, **the CCP will verify shipment unit count and note discrepancies on the carrier's freight bill.** These discrepancies will be reported in accordance with current regulations. **Materiel is accumulated and positioned** in separate locations by air lines of communications (ALOC), DOD activity address code (DODAAC), and mode of onward movement; i.e., surface or air. All consolidated shipments received with a shipping depot TCN are directed through the small package sorting line. **Incoming small package cargo will be sorted** by priority and then by ALOC and DODAAC. **Documentation will be checked** for availability and accuracy. Documentation will be prepared, when required. Packages are consolidated by consignees into large shipment units and forwarded to the appropriate staging area (surface or air) to be consolidated with other cargo. **General Services Administration (GSA) vendor shipments will be examined** for transportation damage, erroneous markings and other appropriate discrepancies, and required discrepancy reports will be prepared. **Purchase order(s) will be annotated** with CCP receipt date and processed accordingly. Vendor receipts other than GSA will be processed in the same manner as freight.

b. **Securing an Ocean Booking**

- **The CCP begins the container booking process by projecting the requirements for containers.** To preclude a substantial increase in processing time and storage facilities, the cargo does not have to actually be on hand at the CCP to determine the container requirements. Instead, the CCP makes forecasts based on experience and insight into future trends.

- **The CCP develops the container requirements for each destination**

stated simply by number and size (large or small, i.e., longer than 32 feet or not). The CCP submits the requirement to the OCCA booking office, which books the total number of containers required with the appropriate ocean carrier. Having secured the booking, the OCCA booking office then furnishes the CCP with a block of TCNs, one per container.

- **The CCP coordinates directly with the ocean carrier's agent for spotting of empty containers.** As containers are required, the WCA/OCCA assigns an export traffic release (ETR) and TCN to a specific container.

c. **Stuffing/Loading the Container**

- Since the CCP is not required to identify in advance the container consignee for each container requested, **loading is accomplished as cargo is received and consolidated**. To meet delivery requirements at lowest overall costs, the CCP usually "stuffs" cargo into containers in the following descending order of preference:

  •• **A full container load for a single consignee.**

  •• **A container load for delivery by stopoff service to multiple consignees in the same geographic area.** The ocean carrier assesses an additional charge for each stopoff en route to the final destination. Various Service and/or Agency publications and MTMC Pamphlet 55-13 provide guidance on stopoff consignee selection, stowing, blocking, and other appropriate areas.

  •• **A container load for delivery to multiple consignees through a breakbulk point** (including a SPOD). The additional transshipment handling necessary at a breakbulk point usually results in additional transportation cost and time as well as providing increased potential for loss or damage.

- When loading the container, the CCP maintains consignor shipment unit integrity and uses a split shipment indicator as necessary.

d. **Preparing Shipping Documentation**

- When the container is stuffed and ready for shipment, **the installation transportation officer will send the TCMD data** (DOD 4500.32-R, Vol 1 "MILSTAMP") to MTMC WCA responsible for shipments of cargo to that area of the world through available communications media, i.e., Defense Data Network, facsimile, telephone or other types of communications media. Preposition of TCMD details at the port of embarkation supports critical port processes of management, control, manifesting, and billing.

- TCMD details are essential to port personnel when generating the Ocean Cargo Manifest. The **Ocean Cargo Manifest** is prepared and provided to the carrier, with copies (electronic and/or paper) forwarded to the receiving terminal at the overseas port. When containers are received in-theater, the container number and owner information are provided to the theater movement control organization for accountability purposes.

- Prior to sealing the container, the CCP places a **contents list** (TCMD, listing) in a waterproof envelope labeled "Load List." The envelope is securely attached to the inside of the container loading door. Both consolidated and partial load lists are made when the container is loaded for stopoff deliveries.

- The CCP adds **necessary container information** (ISO/container number, SPOE, and stopoff indicator) to the TCMDs received from the shipper for each shipment in the container.

- A **TCMD** or other document containing TCMD data is prepared by the CCP for container shipments moving to a SPOE under terms of the MSC Container Agreement and Rate Guide. The CCP, at a minimum, maintains one signed copy to record acceptance by the original inland carrier. In addition, the CCP provides the inland carrier with at least two copies of the document. The inland carrier gives one of its copies to the ocean carrier's representative (e.g., gate guard, checker) when delivering the container to the carrier's container yard.

- When the container must be moved to the port of embarkation (POE) by a negotiable document, the CCP prepares a **commercial bill of lading** or **government bill of lading (GBL)**. Bill of lading includes the container TCN, TCN for each shipment unit (contents), and the complete ISO/container and seal numbers. The detailed procedures for completing and distributing the bill of lading are contained in the DTR for CONUS and in appropriate theater directives overseas.

- When a container carrying classified materiel, certain hazardous materiel, or release unit (RU) quantities of inert components is shipped by an inland CCP, the CCP sends a **report of shipment (REPSHIP)** to the next transshipper, e.g., SPOE. The REPSHIP is sent by electronic transmission (ETM) (or telephone confirmed by ETM) as soon as possible to ensure its receipt before the shipment. Complete details on REPSHIP procedures are contained in DOD 4500.32-R, "MILSTAMP."

- The inland CCP also completes an **in-transit data report** received for GBL shipments. Details for completing and forwarding the in-transit data are also contained in DOD 4500.32-R, "MILSTAMP."

e. **Moving the Container to the SPOE**

- **The CCP coordinates directly with the ocean carrier's agent for pickup of full containers** as indicated in the ETR instructions.

- The **line haul** or **drayage of containers** is generally specified by the OCCA under the terms of the MSC Container Agreement and Rate Guide. The service is provided by ocean carriers through interline agreements with commercial line haul carriers. Other alternatives for linehaul or drayage which may be used (when indicated in the ETR) include using organic equipment and commercial tariffs, tenders, or other contracts.

- Upon release of the container for delivery to the POE, **the CCP submits complete advance TCMDs** for the container to the WCA or OCCA. Advance TCMD is the notification to the OCCA and terminal that the container is stuffed and en route to the SPOE. In addition, the TCMD ties together the container TCN, the container ISO serial number, and the container contents.

f. After completing a shipment, **the CCP maintains records** detailing the actions undertaken, including a TCN cross-reference file between shipment units and containers. Various Service publications detail the length of time and method for keeping such files.

## 12. Cargo Excluded from DLA Consolidation and Containerization Activities

**The following materiel and/or shipments should not be routed to a DLA consolidation and containerization activity:**

a. **Release unit shipments** or combination of LRUs which economically fill a container for a single consignee or overseas breakbulk activity.

b. **Single items** oversize to a forty-foot container (maximum item dimensions, L 450" x W 89" x H 88") or occupying 75 percent or more of the space in a 40-foot container, i.e., vehicles, construction equipment.

c. **Air-eligible item(s)**, as specified by individual Service regulations, including special projects such as Army's Air Line of Communication (ALOC) and Remote Area Support (RAS), that are outsized to a 463L pallet (88" x 92" x 96") or greater than 10,000 lbs, that have not been diverted to surface.

d. **Air Force, Marine Corps or Navy expedited and high-priority** (TP1 and TP2) shipments with RDD of 999, 777, 555, N--, and E--, or a Julian date less than 21 from the date the shipper received the requirement (less than 60 days for Marine Corps shipments), which have not been downgraded to surface.

e. **Parcel Post eligible** shipments, if more economical, ship via Fleet Post Office or Army Post Office based on both the total CONUS and outside the continental United States (OCONUS) transportation costs.

f. **Foreign military sales shipments**

g. Shipments categorized according to the Water Commodity Codes listed in Figure VI-3 are not eligible for consolidation.

# SECTION C. AMMUNITION AND OTHER HAZARDOUS MATERIALS

## 13. General

**Packaging, shipping, handling, and inspecting of ammunition and hazardous material is mandated by United States laws** and international regulations that include the use of intermodal containers and container equipment. The intent of this section is to provide an overview of joint doctrinal guidance and joint tactics, techniques, and procedures that are common to the Department of Defense and other US Government agencies and organizations, as appropriate. This section applies to the selection of commercial or military owned intermodal containers that meet the standards of ISO and the UN for Class I Explosives and other Hazardous Material.

## 14. Objectives

**A primary objective is to obtain maximum efficiencies from use of container services at the lowest overall cost to the government**, while meeting cargo delivery requirements. **Containers should be stuffed to the maximum extent possible**, taking into account such factors as material compatibility, net explosive weight, quantity distance, cargo hold time, single or multiple consignee deliveries, configuration and density of cargo, and availability of specific size of containers, handling, transportation, and traffic management of containerized hazardous cargo. **The goal is to enhance inter-Service cooperation and coordination** and to provide a framework within the Department of Defense to exchange essential data and information.

## 15. Planning and Execution

**The JMTCA,** under the command and control of the Commander, Industrial Operations Command (IOC), **consolidates**

**Materiel Categories**

| Item | Water Commodity Code |
|---|---|
| Aircraft, unboxed | (990-999) |
| Arms, ammunition, & explosives | (40X-499; 680-685) |
| Baggage/household goods | (360-399) |
| Boats | (640-642) |
| Bulk cargo, unpacked, dry or liquid | (200-299) |
| Classified or intelligence material | NA |
| Controlled substances | (532/33; 537-540/42) |
| Mail | (610-619) |
| Privately owned vehicles | (300-359) |
| Radioactive materiels (MILSTAMP Code A) | NA |
| Refrigerated cargo | (100-199) |
| Special cargo (Incl. vehicles, oversized, & overweight items) | (800-899) |
| Subsistence, perishable | (500-529) |
| Materiel requiring special handling | (Type Cargo Codes: |

A,B,C,D,E,F,G,J,K,L,M,N,O,P,R,S,T,U,V, W,X,Y and Special Handling Codes: 2,3,4,5,6,7

**Figure VI-3. Materiel Categories**

**all Service's containerized munitions movement requests for OCONUS shipment aboard common-use sealift**. In addition, CONUS distribution (i.e., ABL, training) movements are identified for applicable container utilization by the JMTCA. In coordination with the Container Fleet Division (CFD) of the Military Traffic Management Command, Eastern Area, IMDG certified containers (both military owned and commercial) are utilized to satisfy movement requirements.

a. **The CFD is responsible for the accountability and control of the CADS fleet.** The CADS fleet contains various ISO container types, including restraint MILVANs, commercial end opening and side opening containers, half-height containers, flatracks, and support equipment such as the load and roll pallet. Refer to Chapter II, "Intermodal Equipment," Section B, "Types/ Availabilities of Containers and Types of Container Handling Equipment," for a complete discussion of container types.

b. **The JMTCA is responsible for determining the container type to employ for each shipment.** This determination will be based upon the specific physical characteristics of the munitions, operational requirements, outloading efficiency, and overall cost effectiveness. The JMTCA will request outloading comparisons from the US Army Defense Ammunition Center and School as required to assist in the analysis of all possible munition load configurations. The JMTCA consolidates all Service munitions movement requirements for single manager conventional ammunition (SMCA) and Non-SMCA munitions for OCONUS, prepares the export traffic release requests, and transmits the information to the appropriate MTMC area command in order to create port call files to facilitate routing preparation and munitions being called forward to seaports of embarkation.

c. Data incorporated into the **JMTCA ship planning and/or DOD Identification Code roll up messages** allows geographic combatant commanders to influence the munitions mix, mode and time frame for receipt in-theater of processed movement requirements.

d. **IOC is responsible to coordinate with CFD** to ensure that distribution actions are taken to preposition containers by type at applicable shipping installations in order to meet initial and sustainment munitions movement requirements in support of contingency and peacetime operations.

## 16. Handling of Ammunition

Because of its hazardous nature, **ammunition and explosives material require special consideration when handled in US ports**. Facilities that handle ammunition and explosives, including commercial ports, are required to provide QD separations to and from ammunition and explosives IAW DOD 6055.9-STD or CFR 29. Under CFR 49 176.100 and CFR 176.415 requirements, containerized division 1.1 and 1.2 explosives, blasting agents, and ammonium nitrates planned for ocean movement aboard commercial vessels require the submittal of an application and permit to handle hazardous materials. The Coast Guard (CG) FORM 4260 (Application and permit to handle hazardous materials) must be submitted by the carrier in advance to the local Coast Guard captain of the port (COTP) for approval prior to initiation of the scheduled explosives loading and/or unloading operation. The 463L pallet and net system is the primary system for airlift operations and is outlined in joint service documents Air Force Regulation (AFR) 76-13, AR 59-18, OPNAVINST 4600.21C, Marine Corps Order (MCO) 4631.8C, DLA Regulation (DLAR) 4151.15. Air shipment of ammunition must comply with the multi-Service publication Air Force Joint Manual (AFJMAN) 24-204, International Air Transport Association (IATA) manual, TM 38-250, NAVSUP PUB 505, MCO P4030.19F, DLA Manual (DLAM) 4145.3, "Preparing Hazardous Materials for Military Air Shipments." Procedures for use of ISO containers, storage containers, and tactical shelters on military aircraft are also discussed in this document. CONUS and geographic combatant commanders must ensure that remote loading and unloading areas are provided for at aerial ports of embarkation and debarkation for ammunition and hazardous materials, as required.

a. **Special Permits:** As indicated above, **a USCG permit issued by the local USCG COTP (CG FORM 4260) is required** prior to commencing containerized division 1.1 and 1.2 explosives, blasting agents, and ammonium nitrates cargo handling operations from or to commercial vessels. The permit process is initiated by completion of the application portion of CG-4260 and its submittal to the COTP within whose area of responsibility the proposed operation will occur. **Responsibilities for the submittal of application for a permit to handle containerized explosives or hazardous materials are as follows:**

- **Military sealift vessels:** Commander, Military Sealift Command (COMSC) will initiate application for all MSC-controlled vessels.

- **Commercial vessels:** Commercial ship operators, with the assistance of the COMSC, will initiate application for privately owned and/or operated commercial vessels. COMSC will work with other concerned agencies to facilitate timely submittal of the application to the appropriate COTP.

b. **Loading Plans. Shipper service activities responsible for developing internal container loading diagrams are as follows:**

- **Army:** US Army Defense Ammunition Center and School, ATTN: SMCAC-DET, Savanna, IL 61074-9639.

- **Navy:** Naval Weapons Handling Center, Naval Weapons Station, ATTN Code 803, Colts Neck, NJ 07722.

- **Air Force:** Ogden Air Logistics Center, ATTN: LIWXD, Hill AFB, UT 84056.

c. **Planned Shipload Lots.** Planned shipload lots of ammunition will normally be handled under procedures outlined in DOD 4500.9-R, "Defense Transportation Regulation (DTR)," with the following exceptions:

- **The seaport of embarkation will be selected and tentative ship arrangements made in advance** through coordination between USTRANSCOM (CONUS SPOE), Supported Commander (OCONUS SPOE), and the JMTCA.

- **The JMTCA will issue a planning message to all concerned**, listing the origin of each item, the applicable port of embarkation, and the import window established to support each ship plan. MTMC area commands will use this planning message as an ETR request and will issue an ETR directly to the appropriate shippers.

d. **Container Types.** In addition to containers listed below, **Military Handbook 138A (MIL-HDBK-138A) sets forth inspection criteria** for the Department of Defense for both military and civilian intermodal containers and lists examples of different types. It also includes other Federal Specifications. Shipment of ammunition is approved in MILVANs with or without mechanical load bracing systems and in ISO containers when loaded using internal blocking and bracing methods described in USCG approved internal container load diagrams.

**NOTE:** Over-the-road movement of hazardous material in Europe must comply with the European Agreement Concerning the International Carriage of Dangerous Goods by Road and host-nation rules and regulations for movement between NATO countries and/or to and from a seaport for import and/or export. Host-nation rules, which differ from country to country, generally involve additional precautions in preparing cargo and loading vehicles. Rail movement of hazardous material in Europe must comply with the European Regulation Concerning the International Carriage of Dangerous Goods by Rail. Preparation will be for rail movement to and from rail head when major portion of movement is via rail. For movements of any significant distance, most European countries require movement via rail.

## SECTION D. THEATER RECEPTION, STAGING, ONWARD MOVEMENT AND INTEGRATION, AND RETROGRADE OF CONTAINERS

### 17. General

a. **This section provides an overview of the reception and onward movement process for units deploying to a theater of operations.** An efficient and timely inter- and intra-theater strategic movement of cargo, personnel, and information is key to responsive force projection and successful theater reception, onward movement, and retrograde of cargo. To ensure consistency in common-use ports worldwide USTRANSCOM, through its components AMC and MTMC, will normally manage and operate common-use air and sea POEs and PODs for the supported commander. In areas not served by a permanent USTRANSCOM presence USTRANSCOM will provide deployable aerial ports, and in concert with US Atlantic Command will

provide deployable seaport operating force packages to manage and operate POEs and PODs. This will provide a standard global force operating capability and simplify system interfaces, operating systems and procedures, information exchanges, and command and control activities to ensure a seamless hand-off of information and cargo. **This movement process includes containers which units will use to move equipment.** Arrival at a POD represents the transition from the strategic movement system to the theater movement system. It is also the normal transfer point, unless otherwise designated, of command authority from the supporting command to supported commander. The responsibility of moving the unit and maintaining in-transit visibility simultaneously shifts from USTRANSCOM to the theaters' movement control element, i.e., the Joint Movement Center (JMC) as described in Joint Pub 4-01.3, "Joint Tactics, Techniques, and Procedures for Movement Control." The geographic combatant commander's designated movement control element will continue movement control of the unit and their equipment to its final destination.

b. The **theater commander's designated movement control element** should be responsible for managing, controlling, and ensuring that containers are used for transport of cargo and not for other purposes (i.e., storing cargo, shelters). This responsibility may be executed through the Theater Army Movement Control Agency (TAMCA) or senior movement control headquarters or their representatives.

c. **Timely and accurate reporting of information is essential to container management.** Each terminal, consignor, and consignee must notify the designated container manager of receipt, unloading, reloading, and release of containers. Each mode operator and each designated reporting point submits in-transit reports. Centralized management is necessary to ensure that containers are used only for transport and any containers used for other purposes are authorized by headquarters.

## 18. Seaport of Debarkation

a. A **SPOD** is selected by the geographic combatant commander in coordination with USTRANSCOM. **The operation of the SPOD is the responsibility of the geographic combatant commander.** However, the geographic combatant commander may enter into a command arrangements agreement with the Commander in Chief, US Transportation Command, to allow USTRANSCOM through its component MTMC to manage all common-use cargo operations at the SPODs. This includes the use of deployable seaport-operating force packages to operate SPODs in any contingency area. USTRANSCOM/MTMC through the **WPS** and the **GTN** can provide a seamless handoff of cargo and information to the theater movement control managers. **The TAMCA or movement control center (MCC) assigns movement control teams (MCTs) to coordinate port clearance missions.** The MCTs control and arrange the processing of units and equipment for onward movement. MCTs can be added incrementally to coordinate onward movement requirements based on the type of terminal and the terminal clearance capacity. Discharge time depends on the capacity of the ship and the rate at which it can be loaded or discharged. The MCT plans for onward movement based upon ship manifests and discharge rate. The **logisticians** within the theater must ensure that containers arriving in the theater are promptly discharged and rapidly moved forward to the central receiving and shipping point (CRSP) or their final destination. As part of the surface distribution plan, **movement controllers** will develop a movement program which allocates transportation for the movement of all cargo and personnel from the POD. The **movement control personnel** will coordinate transportation for onward movement of containers.

b. In combined operations being conducted from friendly soil, **the host nation may choose to exercise its territorial responsibilities and continue to operate ports in the theater**. The responsibility of US forces at these ports will be based upon agreements between the United States and the host nation governments.

c. **Container Discharge**

- **Fixed Port.** Fixed port terminals normally provide suitable facilities to off-load containers and transfer them to inland transportation nodes. **Fixed port facilities will be used to the maximum extent possible** because of the large volume of containers such facilities can discharge at a rapid pace, and the close location to inland transportation hubs. Off-loading containers in the stream can also be used in conjunction with fixed port operations if berthing space is limited.

- **Joint Logistics Over-the-Shore (JLOTS) Operations.** JLOTS operations are another means of providing support when established ports are not available or are not adequate. **JLOTS operations are conducted over unimproved shorelines, through fixed ports not accessible to deep draft shipping, and through fixed ports that are inadequate without the use of JLOTS capability.** JLOTS operations are inherently less efficient than fixed port operations, because they do not have the specialized CHE found at fixed ports. While JLOTS operations will be avoided where possible, JLOTS capabilities may be needed to supplement fixed ports.

d. **The TAMCA or MCC must synchronize APOD and SPOD clearance operations.** Portions of units will come from the APOD to the SPOD to receive their equipment. The MCT tells the terminal or port operator how to sort the equipment when it is discharged based on priority mode of onward movement. The MCT coordinates onward movement requirements (i.e., trucks, rail). The MCT receives requests for line-haul or special transportation requirements, such as heavy equipment transporters, and commits theater or Corps Support Command (COSCOM) truck assets.

e. **The MCT responsible for planning onward movement must coordinate with the terminal commander in regards to port clearance.** Maintenance is a unit responsibility, but the MCT must provide guidance and movement instructions to units to ensure that vehicles that move by rail or air are not reconfigured or fueled. The MCT plans and orders railcars for unit rail movement requirements. The unit loads and ties down its equipment. The MCT provides technical assistance.

f. The following factors should be considered when planning for container operations. The average military useful container ship is 30,000 dead weight tons and has a capacity of approximately 2,000 TEUs. This ship is approximately 850 feet long with a draft of 38 feet. The total short tonnage of the cargo is 18,000. Using constrained labor capability, planners should consider 14 gantry crane cycles per hour. Each gantry crane requires four pieces of equipment to ensure full utilization of the gantry crane. These can either be yard tractors or straddle carriers. Storage space in the port should be 2.3 times the average cargo transferred per ship call. When using a chassis operation, the required storage area is about 50 acres. Storage density of chassis is 42 per acre. There are 160 containers per acre of storage in a stacking operation. Containers are generally stacked three high when commercial straddlers are used and are stacked in rows for a total of 18 containers. Storage capacity must be about 5.5 times the cargo transferred per ship call because of rehandling and classification

delays. The apron area should comprise 10 acres. The total requirement for storage is 60 acres. Each truck that passes through the port gate should be assessed a total delay time of 1.5 hours (this time includes port entry, loading, and port clearing).

g. **The following additional organizations provide support at the SPOD:**

- The **Army headquarters** responsible for geographic support responsibilities, such as the TAACOM or COSCOM, provides logistics and life support for units transiting the port.

- The **PSA** provides maintenance; configures equipment for onward movement; and provides security, fueling, and other support requirements. The PSA is a tailored organization unique to each port. The PSA is provided by the supported commander, normally through the Theater Army Area Command (TAACOM) or COSCOM area support group (ASG) assigned to provide logistical support to the SPOD. It is under the operational control of the terminal commander.

h. After clearing the terminal, **equipment will be processed for onward movement** by specific modes at marshalling areas as follows:

- **Rail** for movement of outsize, oversize, and track vehicles to their staging area and/or tactical assembly area (SA/TAA).

- **Intratheater (tactical) airlift** from a sea-to-air interface of critically needed units or priority reinforcements to the SA/TAA.

- **Surface movement** by highway of wheeled vehicles to the SA/TAA, pre-positioned material site, or final destination.

- **Inland waterway** by lighterage, if available, depending on priority of movement and cargo transfer capability.

## 19. Planning Sequence for Reception, Staging, Onward Movement, and Integration

a. The Army is responsible for receipt and onward movement of supplies and material within a mature theater. Units should coordinate their requirements for the movement of containers with theater movement control elements or US Army transportation units.

b. During this process, **movement planners at the senior movement headquarters have the responsibilities shown in Figure VI-4**.

c. **Plan for retrograde missions** for equipment returning from the SA/TAA in the same manner as above.

## 20. Seaport Clearance and Onward Movement Operations

a. A critical requirement for proper container distribution management is the **interfacing of the Services' automated systems** (i.e., GTN and Theater Command and Control Systems).

b. **The theater first gains visibility of inbound containers from GTN**, in the form of the ocean cargo manifest. The manifest is sent from the Navy or MTMC command responsible for operating the SPOE. MILSTAMP requires transmission of the manifest to the SPOD within 72 hours after the vessel departs from the SPOE. The ocean cargo manifest is compiled from two primary sources: the **advance Transportation Control and Movement Document** from the shipper and **lift data** from the ocean carrier.

- **The following actions occur upon receipt of the manifest:**

## RESPONSIBILITIES OF MOVEMENT PLANNERS AT THE SENIOR MOVEMENT HEADQUARTERS DURING PLANNING

Obtain advance arrival information for intertheater sea and air movement from port operators and operational planners.

Assess the movement requirements data such as Required Delivery Date (RDD), priority of movement, equipment characteristics, and special requirements.

Group the requirements for each Port Of Debarkation (POD) by destination geographic location in RDD sequence.

Obtain movement priority for requirements that have the same destination and RDD.

Determine available modes for onward movement based upon planning requirements. Consider the requirement, equipment characteristics, priorities, and modes servicing the PODs and Staging Areas/Tactical Assembly Areas (SAs/TAAs).

Select and program the mode for each requirement for reporting to POD based upon estimated time for POD clearance. This is dependent on the type of strategic asset (airlift, sealift).

Determine availability of equipment for follow-on missions at the POD. Estimate uploading and processing time for each mode at the POD. Apply time/distance factors to estimate transit time to other transportation nodes or arrival at the SA/TAA. Determine total transit time, maintenance and crew rest, and return time.

Resolve conflicts by either rerouting, changing modes, or rescheduling or obtaining guidance from operational planners. Reconfirm that the selected route can accommodate any oversize or overweight cargo/equipment being moved.

Identify requirements for Materials Handling Equipment (MHE) and Cargo/Container Handling Equipment (CHE) at the POD for each mode, cargo and trailer transfer points, and at destination. Coordinate with the Theater Army Area Command (TAACOM) or Corps Support Command (COSCOM) to provide sufficient MHE and CHE to meet the needs at the points and times required.

Coordinate for holding and storage areas outside of POD staging areas if ports become congested due to transportation shortages or scheduling problems.

Identify en route supported requirements for fuel, mess, maintenance, and billeting. Coordinate with the TAACOM and/or COSCOM for this support.

Determine critical points where highway regulation or traffic control should be established to maintain the flow of traffic. Coordinate for en route communications.

Figure VI-4. Responsibilities of Movement Planners at the Senior Movement Headquarters During Planning

•• Port operators begin preparing documentation to clear the containers through the port. If the containers are shipped under the provisions of the MSC container agreement that requires the ocean carrier to provide inland transportation, it will be annotated on the manifest. If the manifest indicates delivery to the ocean carrier's terminal, inland transportation arrangements are made by the port MCT.

•• The port MCT provides this data to the TAMCA or equivalent organization, which maintains theater visibility of containers. The port MCT produces and transmits the Estimated Time of Arrival forecast to the consignee (if possible), the destination MCT, the TAMCA, and the servicing transportation battalions.

•• The container management office processes the manifest to its automated system. This produces an initial master record of every container expected to arrive in theater.

- Upon receiving the forecast, **destination MCTs coordinate with the consignee** to determine disposition instructions, delivery location, and capability to unload the containers. **They provide instruction back to the MCT as follows:**

•• Free flow the container to the manifested consignee.

•• Expedite the container to the manifested consignee.

•• Divert the container to another consignee.

•• Stage the container at the CRSP.

- **The MCT normally receives disposition instructions and plans onward movement before the ship arrives at the SPOD.** The MCT must receive any instructions to divert or stage containers before arranging onward movement. If required, the MCT will coordinate movement clearance.

- The advance ocean cargo manifest is only a planning document. **Port operators perform 100 per cent reconciliation during off-loading.** Actual containers discharged will be matched against the advanced ocean manifest and all discrepancies noted. If there are differences, the port MCT must notify the TAMCA and destination MCTs for disposition instructions. The port MCT and the composite logistics organization will update their accounting system.

- **Port operators, the MCT, and mode operators should strive to move containers from the ship directly to the mode of transportation for onward movement.** This will prevent accumulation at the port. Immediate transportation may not always be possible or desirable, and containers will be held in marshalling yards to await movement. **The marshalling yard is a temporary holding area for containers awaiting transportation.** It should be organized to promote rapid and continuous movement to and from the port and/or beach. The marshalling yard should be located as near the port operation as possible to minimize handling time.

•• If there are shortages of line haul assets, a marshalling yard allows mode operators to program their assets and not allow those assets to sit idle while the ship is being discharged.

•• The tactical situation may not allow immediate movement due to higher priorities for use of transportation modes or mission support requests.

- **Containers may be transported by military assets or host-nation carriers** via rail, highway, inland waterway.

  •• **Rail**, when available, is the most efficient method of moving large quantities of containers from the ports. Rail should be used to move containers as far forward as feasible. It is less affected by adverse weather than other modes, but its flexibility is limited because it depends on a fixed roadbed which may be vulnerable to enemy action.

  •• **Highway transport** is the most flexible method of moving containers and will be employed in line-haul, local haul, terminal clearance, and transfer operations. This will be the primary mode to forward containers from rail terminals directly to the consignee. Highway transport will be required for multistop containers. Port clearance is a good use of host-nation transportation support and should be planned for if possible. The MCT may need to coordinate off-loading capability with consignee.

  •• **Inland water transport** can be used when there are sufficient assets, units, and facilities. This mode can help relieve pressure on rail and truck transportation modes. Inland water is the slowest mode and requires the most container rehandling. Due to variable tides and water depths during seasons, this mode may not be available. The advantage is that large quantities can be moved.

  •• **Host-nation carriers** may move containers. However, they will not normally move ammunition. Ammunition will normally be moved by military transportation assets.

- When containers are delivered to the consignee or CRSP, they should **unstuff the container as quickly as possible and report its availability for pickup** to the servicing MCT.

- **If on delivery of the container it is found that it needs to be delivered to another consignee, the MCT must notify the MCC.** The MCC will coordinate with the TAMCA for disposition instructions and will instruct the MCT to do the following:

  •• **Reconsign** the container to the proper consignee with the same mode operator; and

  •• **Unstuff** the container and deliver the cargo using other modes of transport.

## 21. Container Distribution Within a Theater of Operations

a. **The TAACOM, or equivalent command, provides direct support** (less movement control and line-haul transportation) **to units located in or passing through its assigned area**. This support includes providing most field services and classes of supply. The TAACOM executes support to the reception and onward movement process through its subordinate **ASG**. ASGs are normally assigned a geographic area of responsibility in the Communication Zone. They are normally located to take advantage of the transportation network and provide responsive logistical support during the reception and onward movement process.

b. Throughput is based on the geographic combatant commander's priorities. Ideally throughput as far forward as possible is best. Movement directly from the POD to the Supply Support Activity (SSA) will enhance distribution of cargo to the ultimate user. The ability of receiving units to receive and off-load and unload containers must be determined prior to moving containers

forward. If container unstuffing is to occur, a CRSP will be created to sort cargo before shipment. The CRSP will also be the central location where retrograde items and empty containers can await shipment.

c. Within the theater of operations **there is a container handling mission at the destination and intermodal points throughout the system**. The capability to handle containers at destination will be required for units deploying with equipment and basic loads containerized. After the theater has matured and the logistical buildup begins, **Army Cargo Transfer Units** that initially operate at water ports **can be echeloned forward**. These units will then be tasked to conduct cargo handling operations at forward mode transfer points and/or, as work loads develop, to augment corps and division units requiring additional CHE to meet surge requirements. The movement control elements would assist tasking for the required CHE.

d. **The TAMCA, or equivalent organization, plans and coordinates onward movement from the POD through intermediate points to the staging area.** Their responsibilities include the following:

- **Coordinating transportation** and selecting modes for onward movement.
- Providing **transportation services** and **highway regulation**.
- Coordinating **marshalling and holding area requirements** with the TAACOM or equivalent headquarters. (Marshalling areas are required when units prepare for movement or change from one mode to another.) Establishing holding areas for units to conduct inspections, prepare vehicles, or await onward movement in case of delays.
- Providing **movement schedules** for planning logistic support to moving units.

e **The TAMCA and TAACOM provide in-transit visibility** of units transiting transportation and/or logistics nodes or geographic areas of responsibility. This information is provided to the joint and theater Army staffs to assist in force tracking. When operations are of less than theater size operations, elements of the combatant commander and supporting CINCs will execute this mission as required. In some cases this may involve MTMC elements with other US Army elements as needed.

## 22. Central Receiving and Shipping Point

**The CRSP receives containers with cargo that must be sorted before transshipment to the SSA or owning unit.** Single consignee cargo and ammunition will not pass through the CRSP; it will flow directly to the user or, in the case of ammunition, directly to the ammunition SSA. The CRSP will be a composite organization, predominately equipped with automation, MHE/CHE, and the necessary support personnel capable of receiving, sorting, and preparing cargo for transshipment. **The CRSP will become the terminal cargo transfer operation** for a bulk storage site as required. The composition of the CRSP is based on anticipated distribution requirements.

## 23. Container Handling Capability

a. **The use of containerization for all deployments magnifies the need for a responsive theater distribution system.** Recent examples of the seriousness of container management include the fact that 25,000 of the 40,000 containers sent to Operations DESERT SHIELD and DESERT STORM had to be opened to determine what was in them. Visibility of expensive materiel was lost, and in some cases not regained until shipment was returned back to the United States. Further, resupply was poor, resulting

in deadlined end items and whole units that received minimal Class IX support during the entire conflict.

b. **The theater distribution system must focus on the receipt of containers both during unit deployment and sustainment operations.** The theater distribution system must be a container-supported system. Containers include ISO standard containers, flatracks, and 463L pallets. The TAMCA or equivalent organization will be responsible for maintaining the status of containers, flatracks, and 463L pallets used for the transportation of materiel between CONUS and the theater of operations. The composite logistics organization will develop policies and procedures to control containers and flatracks allocated for intratheater use to ensure proper distribution according to command priorities. ISO standard containers will be accounted for by serial number, and the status will be known at all times. Flatracks may be accounted for by serial numbers, but Air Force 463L pallets are not. They should be returned promptly to the transportation system after off-loading.

c. **Containerization will be used to the maximum extent possible.** The CRSP and the SSAs should expect to receive much of their cargo in containers. To maximize throughput and transportation assets, the 20-foot container containing supplies for one consignee should be the primary container shipped to a theater of operations. However, the commander should ensure that the theater has the capability to handle 40-foot containers as far forward as feasible to support the operation.

d. The SSAs, all transportation units (movement management and mode operator), and the CRSP will coordinate with the TAMCA or equivalent organization for retrograde of containers. **Retrograde of containers will be accomplished within the theater distribution system.** As part of the container policy, the logistics commanders will determine whether specific containers remain within the theater of operations or be identified for return to the strategic system. Retrograde of containers may be returned to the CRSP (if the containers will be used for distribution within the theater of operations) or to the port for return to the strategic system, dependent on the theater's needs.

## 24. Retrograde of Containers

a. Containers should be used for **retrograde cargo** if the cargo can be containerized, if the cargo is on hand for movement, and if it does not interfere with the reception and onward movement of containers. The TAMCA must plan for the retrograde use of containers through its MCTs.

b. **MCTs monitor retrograde operations.** They will complete the following tasks:

- **Query customers** to find out if they have retrograde cargo that requires movement or receive transportation requests from customers. Determine if the cargo is container compatible and if it is at or near the final destination of the inbound container.
- **Forward container retrograde requests** through their headquarters to the port. The port will forward approved shipping dates and an ETR to the origin MCT.
- **Coordinate movement** of empty containers to a consolidated container collection point if the approved method of retrograde is to line-haul retrograde cargo to consolidation points.
- **Coordinate for CHE/MHE as needed.**
- **Supervise loading and stuffing** of containers.
- **Task the appropriate mode operator** to transport containers.

## 25. Theater Container Management Objectives

Theater container management objectives are shown in Figure VI-5.

## 26. Daily Container Management Activities

The **TAMCA or equivalent organization** will develop, disseminate, and monitor policies and procedures for containerized shipments moving in the theater. **These responsibilities include the following:**

a. **Tracking the movement of containers** consigned to activities within a theater.

b. **Coordinating and approving reconsignment** with the origin and destination MCTs.

c. **Receiving**, diverting, staging, and releasing from staging requests from theater commodity managers, the CRSP, and MCTs.

d. Ensuring that reconsignment, diversions, staging, and release from **staging information** is quickly submitted to the CRSP, ports and MCTs.

e. **Assisting shippers** in planning the proper stuffing of containers with multiple consignees.

f. **Receiving** all container movement information transactions and ensuring that it is quickly submitted for input into all appropriate automated systems.

g. **Monitoring** automation-generated data and automatic digital network transmissions.

h. **Ensuring** that automated cargo forecasts are promptly forwarded to the concerned organizations.

# SECTION E. AMPHIBIOUS AND LOGISTICS OVER-THE-SHORE OPERATIONS

## 27. Purpose

**This section describes unique operations, equipment, and procedures for conducting container discharge operations in a LOTS environment.** A LOTS operation is an amphibious loading and unloading of ships in stream using lighterage to ferry cargo to shore, in friendly or undefended territory, and in time of war during phases of theater development in which there is no opposition by enemy forces. LOTS operations may occur over unimproved shorelines, through fixed ports not accessible to deep draft ships, or through fixed ports that are inadequate with the use of LOTS capabilities. **JLOTS** operations are LOTS operations conducted jointly by two or more Service component forces of a unified command.

## 28. Usage

**During an amphibious operation, container usage by the assault echelon will be minimal.** Container usage can be expected to increase with the deployment of the assault follow-on echelon and increase even more significantly with the introduction of follow-up stores and supplies. **Ship-to-shore movement conducted during an amphibious operation is a prelude to LOTS operations.** As an amphibious operation begins to conclude, a transition begins to LOTS or JLOTS operations. Full LOTS operations are conducted following the termination of an amphibious operation, as directed by a JFC.

## 29. Elements

**Elements of the LOTS system are utilized to meet container off-load requirements.** Specifically, the Navy's cargo off-load and transfer system (COTS) and the

## THEATER CONTAINER MANAGEMENT OBJECTIVES

- Consolidate shipments for single consignee versus multiple consignees or breakbulk points
- Minimize the time for holding or consolidating cargo to fill up containers
- Maximize container cube use to achieve economical movements
- Expedite the movement of throughput and high priority container shipments
- Maintain 100 percent in-transit visibility of containers and contents
- Ensure optimum use of container equipment
- Not allow containers to become congested in yards; keep them moving
- Move containers as fast as mode operators can transport them and consignee can accept them
- Ensure that containers are unstuffed and released back to the transportation system as soon as possible
- Integrate the military and commercial intermodal container management system
- Ensure that mode operators are responsive to the needs of consignee as well as transportation managers
- Try to use containers for retrograde movements as much as possible without slowing down the system

Figure VI-5. Theater Container Management Objectives

Army's Modular Causeway Systems (MCS) and other associated lighterage supports the in-stream off-load requirements for containers. LOTS container handling operations consist primarily of transferring containers from ship to lighterage, from lighterage to transporters, either across a beach or onto an Elevated Causeway System (ELCAS), and then transporting the containers to the Container Control Site ashore.

## 30. Throughput

**During in-stream off-load, throughput is limited** by the rate of discharge from the ship, available lighterage, sufficient CHE to support beach clearance, distance between ship and shore, and weather conditions. Normally, operations can be done marginally up to sea state 3. Conditions beyond these will degrade throughput planning factors, if not terminating container off-load operations entirely.

## 31. Cargo Off-load and Transfer System

**COTS is made up of the Navy standard system of components**, of which the basic building block is the 5' x 5' x 7' Navy lighterage pontoon section and the Army MCS, which is composed of an intermediate section of 40' x 8' x 4.5' and two raked ends of 20' x 8' x 4.5'. These MCS components can be configured into various causeway ferries and floating causeway piers and roll-on/roll-off discharge facilities (RRDF). Refer to Joint Pub 4-01.6, "Joint Tactics, Techniques, and Procedures for Joint Logistics Over-the-Shore," for their operational capabilities. **The components of the COTS system are as follows:**

a. **Side Loadable Warping Tug (SLWT). The SLWT, the workhorse of the COTS system, is used to install, tend, and maintain other causeway system components.** The Navy SLWT is 85 feet long (5 feet shorter than other Navy standard causeways) to keep it within the parameters for side loading on the Navy's landing ship, tank (LST) class ships. The Army SLWT is composed of a 40-foot section and two 20-foot raked ends which are configured into 80' x 24' sections. The SLWTs install floating causeways and RRDF. The SLWT is propelled by two Waterjet Propulsion Assemblies. The SLWTs install ELCAS and perform a wide variety of other functions such as powering causeway ferries, emplacing anchors, installing ship-to-shore bulk fuel transfer systems, and performing surf salvage.

b. **Causeway Section, Powered (CSP). The Navy CSP is the normal power unit for causeway ferries.** Its propulsion system is identical to that of the SLWT; however, the Naval CSP is 5 feet longer than the Navy SLWT, while the modular CSP is the same size as the modular warping tug. The CSP hull is 5 feet longer and it does not have a winch, A-frame, or stern anchor installed.

c. **Causeway Section, Non-powered (CSNP).** The **Navy CSNP** is made up of three 7-foot wide and six 15-foot long configurations of the basic pontoon section to produce the 90' x 21' sections. The modular CSNP is made of two 20-foot raked ends and a 40-foot intermediate section configured into 24' x 80' sections. **The different configurations of the CSNP are described in the following paragraphs.**

- **Causeway Section, Non-Powered (Intermediate) (CSNP[I]).** The Navy CSNP(I) has flexor units at both ends to permit coupling with other powered or non-powered causeway sections. Some sections also have side-mounted flexor slots to permit assembly into a three-causeway wide by two-causeway long discharge facility. A further variant has side connector slots and internal spud wells and is used in the pierhead of the ELCAS.

- **Causeway Section, Non-Powered (Beach End [BE]).** The Navy CSNP (BE) is equipped with a folding beach ramp. The modular CSNP (BE) is equipped with a sloped end for the beach ramp. It is used as the beach end of causeway ferries which permits container handlers to drive onto the causeway and pick up containers. Additionally, the CSNP (BE) is used as the shore end of the causeway pier used by the Navy assault support forces during JLOTS operations.

- **Causeway Section, Non-Powered (Sea End [SE]).** The Navy CSNP (SE) is equipped with a sloping notch and rhino horn. The modular CSNP (SE) has a sloped end to facilitate the discharge of cargo from a lighter onto the causeway pier from the RRDF into the lighters. It is used as the seaward end of the causeway pier. The notch is designed to receive the bow of a LST, landing craft, utility (LCU), or a landing craft, mechanized (LCM-8). The rhino horn slips through a hole in the bow ramp of the LCU or LCM-8 to hold the LCU or LCM-8 in position while vehicles are embarked and debarked.

d. **Elevated Causeway Installable. The ELCAS (NL) is an installable pier facility designed to provide the capability to deliver containers across the beach.** The ELCAS (NL) is a key element in the movement of containerized cargo ashore. It provides the capability to off-load lighterage from beyond the surf zone and difficult beach gradients, such as sandbars, that may cause conventional lighterage to ground far from a dry beach.

- **The ELCAS (NL) currently operational in the Navy inventory are Navy standard systems,** designated as training ELCAS (NL), 810 feet long and elevated from the surf by hydraulic jacking gear. Installation of the ELCAS (NL) starts with the arrival of a Navy construction engineer (SEABEE) or LASH ship modified to carry ELCAS (NL) and other lighterage at the LOTS/JLOTS site. Installation, operation, maintenance, and retrieval of the ELCAS (NL) are covered in Naval Facility Publication P-460, "Elevated Causeway Facility."

- **ELCAS (NL) require significant effort and time to install.** Installation of a 3,000 foot ELCAS (NL) takes approximately 7 days of double shift work. Once the ELCAS (NL) has been installed, containers can be lifted directly, by crane, from lighterage onto motor transport vehicles. This greatly reduces the requirement for container handling equipment at the beach.

e. **Elevated Causeway, Modular.** The ELCAS (M) is a modular pier facility composed of container-compatible modules, providing an interface between displacement craft carrying containers and the beach. The ELCAS (M) will have a nominal length of up to 3,000', as required to reach a 20" water depth at pierhead. The pierhead will be 72' wide by 240' long. The two long sides or the pierhead will have a fendering system to accommodate lighters. The ELCAS (M) is constructed by erecting initial section(s) and mounting a construction crane on top of them. Subsequent sections will be cantilevered from the previously erected sections and secured in place with piles. An ELCAS (M) roadway section measures 24' x 40', consisting of three ISO pontoons, each measuring 40' x 8' x 5'. Emplaced on the ELCAS (M) pierhead are two vehicle turntables for truck turnarounds. Two container-handling cranes will be stationed on the ELCAS (M) pierhead to transfer cargo from lighters to container-handling vehicles for subsequent transfer to shore. Side Loadable Warping tugs and Barge Ferries will be used to install and retrieve the ELCAS (M) system. The ELCAS (M) uses a

commercial 165 ton (nominal) lattice boom crane for assembly of the causeway and the handling of containers. The crane has an 8 x 4 truck chassis and a 110' boom.

## 32. Movement

**The Army has a variety of lighterage that may be used to move containers from ship to shore or to port:** the Logistics Support Vessel (LSV), the LCU 2000, the LCU 1600, the LCM, the Lighter, Amphibious Resupply Cargo 60, and the causeway ferry. All of the lighters operate well in moving containers from ship to port. However, when moving containers from ship to beach, **the LSV and the causeway ferry are the only vessels that can be off-loaded by the RTCH**. The LCU can be off-loaded by the Marine lightweight amphibious container handler. The rest must be off-loaded by a crane. These limiting capabilities must be considered when planning an off-load, especially if it will be dependent upon these types of landing craft.

## 33. Container Handling Considerations

a. **Crane cycle times**, defined as the time required to lift and load a container onto lighterage in-stream or surface transport ashore, **is the critical point in off-load productivity**. Sufficient auxiliary equipment, such as lighterage and transport equipment, are necessary to efficiently and effectively achieve a planned throughput.

b. **Site selection and preparation is just as important** to the success of JLOTS/LOTS operations **as equipment preparation**. Considerations include proximity of staging areas and beach gradient, width, and surf conditions. Anticipated anchorage sites for both ships and major LOTS equipment should be considered in selecting the off-load site. Generally, ships are normally anchored 1 to 4 miles off the beach.

## 34. Planning Factors

**Container handling and transportation planning factors** for container operations in a LOTS/JLOTS operation can be found in Joint Pub 4-01.6, "Joint Tactics, Techniques, and Procedures for Joint Logistics Over-The-Shore," Appendix A.

## 35. Beach Operations

**A critical aspect of transferring cargo ashore involves the transfer at the beach of containers from lighterage to transport vehicles.** Surface preparation such as beach matting must be provided as necessary and as quickly as possible to ensure that the CHE required for beach transfer operations can effectively move about. In order to support the arrival, **off-load and inland management and movement of containers, traditional beach support organizations and operations may need to be augmented or modified** to include CHE, transportation equipment, and container control functions and procedures.

a. The **rough terrain container handler** is the most efficient method of off-loading causeway ferries and lighterage that have been beached. They can pick up the container while on the ferry and place it directly aboard the container trailer or transporter ashore, eliminating double handling on the beach.

b. The RTCH can operate on both improved and unimproved surfaces.

## 36. Container Control Site

**The CCS will receive, identify, and direct inland distribution and retrograde containers.** Containers will move directly from beach off-load points to the CCS in order to limit congestion in the beach area.

# APPENDIX A
## SERVICE SCHOOLS

The following schools provide courses that cover some aspects of container training.

### 1. US Army Transportation Center and School-SC:551

a. Course No: 531-ASIM6

Title: WPS/DAS3.
Length: 7 Weeks
Scope: Operation of DAS3 hardware, including the Keyboard Visual Display Terminal, application of the Department of the Army Standard Port System-Enhanced DBOF and WPS software, and logistics applications of automated marking and reading symbols (LOGMARS [MTMC]).

b. Course No: 553-F2

Title: Department of the Army Movement Management System.
Length: 7 Weeks
Scope: Operation of an IBM system and application of the Department of the Army Movement Management System software.

c. Course No: 553-88N10

Title: Traffic Management Coordinator.
Length: 8 Weeks, 3 Days
Scope: The performance of critical tasks related to cargo documentation, planning, loss and damage control, unit movements, passenger movements, overview of ITO functions, orientation on computerized traffic movement management systems, and the operation of the TACCS hardware and application of Department of the Army Movement Management System-Redesigned software.

d. Course No: 8-55-C20-88A/C/D(BQ)

Title: Transportation Officer (Branch Qualification).
Length: 4 Weeks
Scope: This transitional course is oriented toward the practical and theoretical aspects of transportation operations.

e. Course No: 8C-F12/553-F1

Title: Basic Freight Traffic.
Length: 2 Weeks
Scope: Transportation officer functions; motor, rail, water and air carrier industries; routing; tariff and tenders; freight documentation; and the role of transportation operating agencies.

f. Course No: 8C-F17/553-F5

Title: Surface Deployment Planning.
Length: 2 Weeks
Scope: Instruction for personnel on the responsibilities of the unit movement officer or noncommissioned officer: unit deployment planning; unit movement plans; plan and conduct movement training; COMPASS/AUEL; unit movement automation, preparation of unit supplies and equipment; hazardous cargo by surface mode; plan and conduct CONUS highway operations; convoy documentation; movement by inland waterways; marshalling procedures; use of containers in unit deployment; rail movement planning; railway equipment characteristics and use; blocking, bracing, packing, crating and tie-down procedures and equipment for all modes; rail load out exercise; host nation rail; unit deployment through sea port of embarkation; use of LOGMARS; FSS and

port support activity exercise; unit reception and onward movement in the theater of operations; MAGTF/amphibious shipping, logistics over-the-shore, maritime prepositioned shipping; inland waterways; and theater reception and redeployment.

g. Course No: 8C-F22/553-F8

Title: Transportation Coordinator- Automated Command & Control Information System.

Length: 1 Week
Scope: Operate TC-ACCIS in the automation process of COMPASS data, unit equipment list, deployment equipment list, highway data, convoy march tables, unit movement data, request special hauling permit, rail load plans, rail car requirements estimate, blocking and bracing material, Government Bill of Lading, and production of bar code labels. (With the joint migration of transportation information management systems, Transportation Coordinators Automated Information for Movement System II [TCAIMS II] IOC FY97 will replace TC ACCIS.) TC ACCIS will support the automated transportation functions of Army units only until replaced by TCAIMS II.

h. Course No: 8C-F9/811-F1

Title: Military Standard Transportation and Movement Procedures (MILSTAMP).
Length: 1 Week
Scope: General knowledge of military standard transportation and movement procedures application and interface with other military standard systems, shipment, planning, documentation, clearance procedures, in-transit data reporting, discrepancy reporting, cargo out turn reports, manifesting, Department of Defense Activity Address Directory (DODAAD) and Military Assistance Program Address Directory use, and address marking.

i. Course No: 822-88H10

Title: Cargo Specialist.
Length: 9 Weeks, 1 Day
Scope: Rigging and positioning ship's cargo-handling gear and safety nets; operating MHE, winches, and cranes; loading procedures for shipment by air, rail, and motor; and lift-on/lift-off and roll-on/ roll-off stevedoring operations aboard ship for vehicles, heavy lifts, containers, and general cargo.

## 2. School of Military Packaging Technology (SMPT) SC: 908

a. Course No: SMPT-1

Title: Defense Basic Packaging (MC).
Length: 3 Weeks, 4 Days
Scope: This course encompasses only the most predominant processes, methods, procedures, containers, and marking methods and procedures used in the field of preservation and packing at DOD installations. It provides the theory and practical application of procedures required for cleaning, preserving, processing and marking of general purpose vehicles, materials handling equipment and construction equipment. It also provides training in the transportation of hazardous materials by military aircraft for handlers.

b. Course No: SMPT-5

Title: Hazardous Materials Handling (On-Site).
Length: 5 Days
Scope: Course content includes recognition of materials handling markings, hazard class labels, the effects of each hazard if accidentally released, segregation of classes of hazards according to published compatibility charts for loading in truck, railcars, aircraft, and for warehouse storage; neutralization and cleanup

of minor spills; emergency measures in case of major incidents; recognition of damaged containers and property disposition of same.

c. Course No: 8B-F2

Title: Defense Packing and Unitization
Length: 2 Weeks
Scope: The course describes Department of Defense packing policies, and shows how to construct, reinforce, weatherproof, cushion, and block and brace containers. The DOD Container Design Retrieval System program is discussed, along with marking and labeling for shipment and storage. Containerization and palletization, car loading and use of freight regulations for railroad shipments, and resource conservation and other topics covered.

d. Course No: 8B-F32

Title: Defense Marking for Shipment and Storage.
Length: 3 Days
Scope: An overview of the DOD Logistics Systems; general and detailed marking requirements of MIL-STD-129; marking and labeling hazardous materials; and review, examination, and critique.

e. Course No: 8B-F6

Title: Defense Vehicle Processing for Shipment or Storage.
Length: 1 Week
Scope: The course addresses the causes of corrosion and the practical application of procedures required for cleaning, preserving, processing, and marking of general purpose vehicles, track laying vehicles, materials handling equipment and construction equipment.

f. Course No: 8B-F7

Title: Defense Packaging of Hazardous Materials for Transportation.
Length: 2 Weeks
Scope: The course provides training in the use of regulatory documents for the transportation of hazardous materials. The documents include those that regulate domestic commercial shipments: Code of Federal Regulations Title 49 (CFR 49); international air shipments; International Air Transport Association (IATA) and International Civil Aviation Organization (ICAO); international water shipments; International Maritime Organization (IMO Dangerous Goods Code); and military air shipments: AFJMAN 24-204, Preparing Hazardous Materials for Military Air Shipments. Areas of particular study include classification, shipping papers, marking and labeling, placarding and compatibility as well as containers authorized for packaging of hazardous materials. In addition, the course contains instruction in certification requirements. NOTE: This training satisfies the requirements of paragraph 33-7, AR 55-355/NAVSUPINST 4600.70/AFR 75-2/ MCO P4600.14B/DLAR 4500.3, Defense Transportation Regulation, NAVSUP PUB 505/MCO P4030.19E/ DLAM 4145.3, and "Preparation of Hazardous Materials for Military Air Shipment," for the initial certification.

g. Course No: 822-F13

Title: Defense Basic Preservation and Packing.
Length: 2 Weeks
Scope: Introduction to preservation corrosion control; cleaning and drying; electrostatic discharge control; preservation materials and equipment; preservatives, cushioning, blocking, and bracing; preservation methods; miscellaneous packaging requirements; introduction to packing; fiberboard boxes; triple wall corrugated fiberboard boxes; wooden boxes; crates; miscellaneous containers and fast packs; weatherproofing the pack; cargo unitization; marking and labeling; hazardous materials; packing for parcel post;

industrial packaging; and preservation and packing for shipment.

## 3. US Army Defense Ammunition Center & School SC:910

a. Course No: AMMO-L-10-OS

Title: Intermodal Dry Cargo Container CSC Reinspection Course.
Length: 3 Days
Scope: This course provides students with information required to reinspect intermodal dry cargo containers IAW the Convention for Safe Containers standards. Course content includes survey of CSC test requirements; detailed analysis of reinspection criteria found in the CSC, US Public Law, and Joint Service Regulations; orientation of container structural members; reporting requirements; and reinspection decal placement. Personnel successfully completing the course will be certified as DOD CSC inspectors as required by Army Regulation 56-16, OPNAV Instruction 4620.10, DOD 4500.XX-R, MCO 4635.6A, DLA Regulation 4505.5. Students should wear appropriate civilian attire to conduct outside inspection of containers. This course must be successfully completed every 4 years.

b. Course No: AMMO-L-16

Title: General Transportation of Hazardous Materials Course (MTMC-1). Length: 1 Week
Scope: Course content reviews changes to DOT and DOD regulations to include UN performance oriented packaging (POP) marking, labeling and hazard communications requirements. Compatibility of hazardous materials during transportation is emphasized as is physical security of sensitive Army ammunition and explosives. The course will also cover the requirements for certification of hazardous material to be shipped by military air. Satisfactory completion of this course meets the training requirements of AFJMAN 24-204/TM38-250/NAVSUP PUB 505/ MCO P4030.19E/DLAM 4145.3 and para 33-7, AR 55-355, Defense Transportation Regulation.

c. Course No: AMMO-L-17-OS

Title: Tech Transportation Of Hazardous Materials (MTMC-2)0S.
Length: 2 Weeks
Scope: To provide personnel from all services detailed technical information pertaining to all phases of transportation of hazardous materials by all modes of transportation. Course content includes emphasis on international and DOT regulations, covering transportation of hazardous materials by all modes. Course material will include UN POP marking, labeling and hazard communications requirements. Compatibility of hazardous materials during transportation is emphasized, as is physical security of sensitive arms ammunition and explosives. International regulations covered include the International Maritime Dangerous Goods Code and the International Commercial Air Transport Associations Dangerous Goods Requirements. Students completing the course will fully understand the requirements for shipping hazardous materials by all modes of transportation, to include highway, rail, commercial air, military air and vessel. Satisfactory completion of this course meets the training requirements of para 1-20b AFJMAN 24-204/TM 38-250/ NAVSUP PUB 505/MCO P4030.19E/DLAM 4145.3, and para 33-7 AR 55-355, Defense Traffic Management Regulation.

d. Course No: AMMO-L-22

Title: Naval Motor Vehicle & Railcar Hazardous Materials (HM) Inspection (ES-250).
Length: 1 Week
Scope: This is the basic training course required by OP2165 and OP3681 to provide newly assigned inspection personnel with the

up-to-date requirements, techniques, and procedures for inspection of motor vehicle and railcars for ammunition, explosives, and other related hazardous materials. Course provides students with instruction in DOT hazardous materials identification and communication procedures, to include shipping paper preparation, marking, labeling, and placarding requirements; DOT packaging requirements; DOT loading and unloading requirements to include compatibility; DOT, DOD, and Navy transport equipment inspection procedures (hands-on) using DD Form 626, Motor Vehicle Inspection (Transporting Hazardous Material), and NAVSEA Form 8023/3 blocking and bracing procedures; Navy transportation safety requirements; and security of sensitive conventional arms, ammunition and explosives. The requirements for Navy ammunition and explosive shipments are emphasized.

e. Course No: AMMO-L-23

Title: Naval Motor Vehicle & Railcar (HM) Inspection Recertification (ES-250)-OS.
Length: 3 Days
Scope: This is the basic training course required by OP2165 and OP3681 to provide newly assigned inspection personnel with the up-to-date requirements, techniques, and procedures for inspection of motor vehicle and railcars for ammunition, explosives, and other related hazardous materials. Course provides students with instruction in DOT hazardous materials identification and communication procedures, to include shipping paper preparation, marking, labeling, and placarding requirements; DOT packaging requirements; DOT loading and unloading requirements to include compatibility; DOT, DOD, and Navy transport equipment inspection procedures (hands-on) using DD Form 626, "Motor Vehicle Inspection (Transporting Hazardous Material)," and NAVSEA Form 8023/3 blocking and bracing procedures; Navy transportation safety requirements; and security of sensitive conventional arms, ammunition and explosives. The requirements for Navy ammunition and explosive shipments are emphasized.

## 4. Quota Procedures

a. Army military personnel will apply for attendance at formal school's courses through appropriate channels in accordance with the following regulations:

- Active Army officers - AR 351-1.
- Active Army enlisted personnel - AR 614-200.
- Army reserve officers and enlisted personnel - AR 135-200.
- Army National Guard officers and enlisted personnel-NGR 350-1, Section V.

b. Clearance from the appropriate career management agency is required for all active officers and warrant officers except as indicated below:

- For officers who are not on active duty; and
- For officers who will attend the branch officer basic course of their basic branch within the first 90 days after entry to active duty.

c. Air Force, Marine Corps, Navy personnel and personnel of other governmental agencies should make application in accordance with applicable regulations of their Services and agencies.

d. Personnel responsible for the approval of applications will ensure that students meet eligibility requirements and that the best qualified individuals are selected to attend courses.

## 5. Navy Supply Corps School

Navy Supply Corps School, 1425 Prince Ave. Athens Ga, 30606-2205 offers various transportation related courses. Contact the Academic Dept. on DSN 588-7240, commercial 706-354-7240 for current course and registration information.

# APPENDIX B
## REFERENCES

The development of Joint Pub 4-01.7 is based upon the following primary references.


1. Joint Pub 1-03.21, "Joint Operation Planning and Execution System Reporting Structure (JOPESREP)."

2. Joint Pub 4-0, "Doctrine for Logistic Support for Joint Operations."

3. Joint Pub 4-01, "Joint Doctrine for the Defense Transportation System."

4. Joint Pub 4-01.2, "Joint Tactics, Techniques, and Procedures for Sealift Support to Joint Operations." (In Development)

5. Joint Pub 4-01.3, "JTTP for Movement Control."

6. Joint Pub 4-01.5, "JTTP for Water Terminal Operations."

7. Joint Pub 4-01.6, "JTTP for Joint Logistics Over-the-Shore (JLOTS)."

8. Joint Pub 5-03 Series, "Joint Operation Planning and Execution System."

9. DOD Regulation 4500.XX-R, "Management and Control of the DOD Intermodal Container System." (Draft)

10. DOD Regulation 4500.32-R, "Military Standard Transportation and Movement Procedures (MILSTAMP)."

11. DOD Directive 4500.37, 2 Apr 87, "Management of the DOD Intermodal Container System."

12. DOD Directive 5158.4, 8 Jan 93, "United States Transportation Command."

13. AFI 24-201, "Cargo Movement."

14. AFJI 2403, AR 59-18, OPNAVINST 46000.21C, MCO 4631.8C, DLAR 4151.15, "Management of 463L Pallets, Nets and Tie down Equipment."

15. AFJMAN 24-204/TM 38-250/NAVSUPPUB 505/MCO P4030.19F/DLAM 4145.3, "Preparing Hazardous Materials for Military Air Shipments."

16. AR 55-1, AFJI 24-312, "CONEX/MILVAN Equipment Control, Utilization, and Reporting."

17. DOD 4500.9-R, "Defense Transportation Regulation (DTR)."

18. AR 55-38, NAVSUPINST 4610.33, AFJI24-228, MCO 4610.19, DLAR 4500.15, "Reporting of Transportation Discrepancies in Shipments."

19. AR 56-1, OPNAVINST 4620.8, AFJI 24-313, 1 Nov 82, "Use of Intermodal Containers, Special Purpose Vans, and Tactical Shelters."

20. AR 56-16, OPNAVINST 4620.1, AFJI 24-218, "Joint Procedures for Coding and Marking DOD-Owned Containers."

21. AR 56-4, Oct 90, "Management of Army Intermodal Container Systems." (In Revision)

22. AR 710-2, "Inventory Management Supply Policy Below Wholesale Level."

23. AR 735-5, "Policies and Procedures for Property Accountability."

24. Fleet Marine Force Manual 4, "Combat Service Support."

25. Fleet Marine Force Reference Publication (FMFRP) 4-17, "Intermodel Containerization in the MAGTF."

26. FM 54-11, "Container Movement and Handling in the Theater of Operations."

27. FM 55-65, "Strategic Deployment by Surface Transportation."

28. FM 100-17, "Mobilization, Deployment, Redeployment and Demobilization."

29. Military Handbook (MIL-HDBK) 138A, "Container Inspection Handbook for Commercial and Military Intermodal Containers."

30. MCO 4680.5A, "Containerization Policy."

31. Operational Handbook 7-8, "Deployment of the Assault Follow-On Echelon."

32. OPNAVINST 4680, "Navy Containerization Program."

33. "The International Convention For Safe Containers," 1972.

# APPENDIX C
## ADMINISTRATIVE INSTRUCTIONS

### 1. User Comments

Users in the field are highly encouraged to submit comments on this publication to the Joint Warfighting Center, Attn: Doctrine Division, Fenwick Road, Bldg 96, Fort Monroe, VA 23651-5000. These comments should address content (accuracy, usefulness, consistency, and organization), writing, and appearance.

### 2. Authorship

The lead agent for this publication is the US Transportation Command. The Joint Staff doctrine sponsor for this publication is the Director for Logistics (J-4).

### 3. Change Recommendations

a. Recommendations for urgent changes to this publication should be submitted:

TO: USCINCTRANS SCOTT AFB IL//TCJ3-J4/TCJ5-S//
INFO: JOINT STAFF WASHINGTON DC//J7-JDD/J4-MD//

Routine changes should be submitted to the Director for Operational Plans and Interoperability (J-7), JDD, 7000 Joint Staff Pentagon, Washington, D.C. 20318-7000.

b. When a Joint Staff directorate submits a proposal to the Chairman of the Joint Chiefs of Staff that would change source document information reflected in this publication, that directorate will include a proposed change to this publication as an enclosure to its proposal. The Military Services and other organizations are requested to notify the Director, J-7, Joint Staff, when changes to source documents reflected in this publication are initiated.

c. Record of Changes:

| CHANGE NUMBER | COPY NUMBER | DATE OF CHANGE | DATE ENTERED | POSTED BY | REMARKS |
|---|---|---|---|---|---|
| | | | | | |
| | | | | | |
| | | | | | |

## 4. Distribution

a. Additional copies of this publication can be obtained through Service publication centers.

b. Only approved pubs and test pubs are releasable outside the combatant commands, Services, and Joint Staff. Release of any classified joint publication to foreign governments or foreign nationals must be requested through the local embassy (Defense Attache Office) to DIA Foreign Liaison Office, PSS, Room 1A674, Pentagon, Washington D.C. 20301-7400.

c. Additional copies should be obtained from the Military Service assigned administrative support responsibility by DOD Directive 5100.3, 1 November 1988, "Support of the Headquarters of Unified, Specified, and Subordinate Joint Commands."

By Military Services:

| | |
|---|---|
| Army: | US Army AG Publication Center<br>2800 Eastern Boulevard<br>Baltimore, MD 21220-2898 |
| Air Force: | Air Force Publications Distribution Center<br>2800 Eastern Boulevard<br>Baltimore, MD 21220-2896 |
| Navy: | CO, Naval Inventory Control Point<br>700 Robbins Avenue<br>Bldg 1, Customer Service<br>Philadelphia, PA 19111-5099 |
| Marine Corps: | Marine Corps Logistics Base<br>Albany, GA 31704-5000 |
| Coast Guard: | Coast Guard Headquarters, COMDT (G-OPD)<br>2100 2nd Street, SW<br>Washington, D.C. 20593-0001 |

d. Local reproduction is authorized and access to unclassified publications is unrestricted. However, access to and reproduction authorization for classified joint publications must be in accordance with DOD Regulation 5200.1-R.

# GLOSSARY

## PART I—ABBREVIATIONS AND ACRONYMS

| | |
|---|---|
| ACE | aviation combat element |
| AFJMAN | Air Force Joint Manual |
| AFR | Air Force Regulation |
| ALOC | air lines of communications |
| ALSS | advanced logistics support site |
| AMC | Air Mobility Command; Army Materiel Command |
| ANSI | American National Standards Institute |
| AOR | area of responsibility |
| APOD | aerial port of debarkation |
| AR | Army Regulation |
| ASG | area support group |
| ATACMS | Army Tactical Missile System |
| AUEL | automated unit equipment list |
| CA | civil affairs |
| CADS | cartridge actuated devices; containerized ammunition distribution system |
| CCA | container control activity |
| CCE | container control element |
| CCP | consolidation and containerization point |
| CCS | container control site |
| CFD | Container Fleet Division |
| CFR | Code of Federal Regulations |
| CG | Coast Guard |
| CHB | cargo handling battalion |
| CHE | cargo handling equipment; container handling equipment |
| CINC | commander of a combatant command; commander in chief |
| CJCS | Chairman of the Joint Chiefs of Staff |
| COE | Army Corps of Engineers |
| COFC | container on flatcar |
| COMSC | Commander, Military Sealift Command |
| CONEX | container express |
| CONUS | continental United States |
| COSCOM | corps support command |
| COTP | Captain of the port |
| COTS | cargo off-load and transfer system |
| CRAF | Civil Reserve Air Fleet |
| CRSP | central receiving and shipping point |
| CS | combat support |
| CSA | container stuffing activity |
| CSC | International Convention for Safe Containers |
| CSNP | causeway section, nonpowered |
| CSNP(BE) | causeway section, nonpowered (beach end) |
| CSNP(I) | causeway section, nonpowered (intermediate) |

| | |
|---|---|
| CSNP(SE) | causeway section, nonpowered (sea end) |
| CSP | causeway section, powered; contracting support plan |
| CSS | combat service support |
| CSSE | combat service support element (MAGTF) |
| CTA | common table of allowance |
| | |
| DBOF-T | defense business operations fund - transportation |
| DEL | deployable equipment list |
| DLA | Defense Logistics Agency |
| DLAM | Defense Logistics Agency Manual |
| DLAR | Defense Logistics Agency Regulation |
| DOD | Department of Defense |
| DODAAC | Department of Defense activity address code |
| DOT | Department of Transportation |
| DTR | Defense Transportation Regulation |
| DTS | Defense Transportation System |
| | |
| ECU | environmental control unit |
| EDI | electronic data interchange |
| EDSS | equipment deployment and storage system |
| ELCAS | elevated causeway system |
| EPF | enhanced PLS flatrack |
| ETM | electronic transmission |
| ETR | export traffic release |
| | |
| FLS | forward logistics site |
| FM | field manual |
| FSS | fast sealift ship |
| FTU | freight terminal units |
| | |
| GBL | government bill of lading |
| GS | general support |
| GSA | General Services Administration |
| GSSA | general supply support area |
| GTN | Global Transportation Network |
| | |
| HM | hazardous materials |
| HNS | host-nation support |
| HQ | headquarters |
| | |
| IATA | International Air Transport Association |
| IAW | in accordance with |
| ICAO | International Civil Aviation Organization |
| IMDG | international maritime dangerous goods |
| IMO | International Maritime Organization |
| INU | integration unit |
| IOC | Industrial Operations Command |
| ISO | International Organization for Standardization |

| | |
|---|---|
| ISU | internal airlift/helicopter slingable container unit |
| ITO | installation transportation officer |
| ITV | in-transit visibility |
| | |
| JFC | joint force commander |
| JLOTS | joint logistics over-the-shore |
| JMC | joint movement center |
| JMTCA | joint munitions transportation coordinating activity |
| JOPES | Joint Operation Planning and Execution System |
| JOPESREP | Joint Operation Planning and Execution System Reporting System |
| JS | Joint Staff |
| JSCP | Joint Strategic Capabilities Plan |
| JTTP | joint tactics, techniques, and procedures |
| | |
| LASH | lighter aboard ship |
| LCM | landing craft, mechanized |
| LCU | landing craft, utility |
| LOGCAP | logistics civilian augmentation program |
| LOGMARS | logistics applications of automated marking and reading symbols |
| LOTS | logistics over-the-shore |
| LRP | load and roll pallet |
| LST | landing ship, tank |
| LSV | logistics support vessel |
| LVS | logistics vehicle system |
| | |
| MAGTF | Marine air-ground task force |
| MARAD | Maritime Administration |
| MCO | Marine Corps Order |
| MCC | movement control center |
| MCS | modular causeway system |
| MCT | movement control team |
| MEL | maintenance expenditure limit |
| MF | mobile facility |
| MHE | materials handling equipment |
| MIL-STD | military standard |
| MILSPEC | military performance specification |
| MILSTAMP | Military Standard Transportation and Movement Procedures |
| MILVAN | military van (container) |
| MIPR | Military Interdepartmental Purchase Request |
| MLRS | Multiple Launch Rocket System |
| MOADS | Maneuver-Oriented Ammunition Distribution System |
| MPS | Maritime Prepositioning Ships |
| MSC | Military Sealift Command |
| MT | measurement ton |
| MTMC | Military Traffic Management Command |
| MWSS | Marine Wing Support Squadron |

| | |
|---|---|
| NATO | North Atlantic Treaty Organization |
| NAVAIR | Naval Air Systems Command |
| NOACT | Navy Overseas Air Cargo Terminal |
| NSN | national stock number |
| OCCA | ocean cargo clearance authority |
| OCONUS | outside the continental United States |
| OPLAN | operation plan |
| PLS | palletized load system |
| PM | program manager |
| POD | port of debarkation |
| POE | port of embarkation |
| POP | performance oriented packaging |
| QUADCON | quadruple container |
| QD | quality distance |
| REPSHIP | Report of Shipment |
| RO/RO | roll-on/roll-off |
| RRDF | roll-on/roll-off discharge facility |
| RSA | retrograde storage area |
| RSPA | Research and Special Programs Administration |
| RTCC | rough terrain container crane |
| RTCH | rough terrain container handler |
| RU | release unit |
| S/T | short ton (2,000 lbs) |
| SA | staging area |
| SEABEE | Sea barge: one type of barge carrier transport system |
| SLWT | side loadable warping tug |
| SMCA | single manager conventional ammunition |
| SMPT | School of Military Packaging Technology |
| SPOD | seaport of debarkation |
| SPOE | seaport of embarkation |
| SSA | supply support activity, supply support area |
| T-ACS | auxiliary crane ship |
| TAA | tactical assembly area |
| TAACOM | Theater Army Area Command |
| TAIS | Transportation Automated Information Systems |
| TAMCA | Theater Army Movement Control Agency |
| TAVB | Aviation Logistics Support Ship |
| TC-ACCIS | Transportation Coordinator-Automated Command & Control Information System |
| TCAIMS II | Transportation Coordinator's Automated Information for Movement System II |
| TCC | transportation component command |

| | |
|---|---|
| TCMD | transportation control and movement document |
| TCN | transportation control number |
| TEU | twenty-foot equivalent unit |
| TMO | traffic management office |
| TOFC | trailer on flatcar |
| TP | Technical Publication |
| TPFDD | time-phased force and deployment data |
| TRADOC | United States Army Training and Doctrine Command |
| TRANSCOM | United States Transportation Command |
| TRICON | triple container |
| TSA | theater storage area |
| UE | unit equipment |
| UN | United Nations |
| USCG | United States Coast Guard |
| USNR | US Navy Reserve |
| USTRANSCOM | United States Transportation Command |
| WCA | water clearance authority |
| WPS | Worldwide Port System |

## PART II—TERMS AND DEFINITIONS

**463L system.** Aircraft pallets, nets, tie-down, and coupling devices, facilities, handling equipment, procedures, and other components designed to interface with military and civilian aircraft cargo restraint systems. Though designed for airlift, system components may have to move intermodally via surface to support geographic combatant commander objectives. (This term and its definition are approved for inclusion in the next edition of Joint Pub 1-02.)

**Air Mobility Command**. The Air Force Component Command of the US Transportation Command. Also called AMC. (Joint Pub 1-02)

**allowable stacking weight.** The amount of weight that can be stacked on corner posts of a container when subjected to 1.8 times the force of gravity. (This term and its definition are approved for inclusion in the next edition of Joint Pub 1-02.)

**American National Standards Institute.** The United States standards organization that establishes procedures for the development and coordination of voluntary American National Standards. Also called ANSI. (This term and its definition are approved for inclusion in the next edition of Joint Pub 1-02.)

**approval authority.** A representative (person or organization) of the Commandant, US Coast Guard, authorized to approve containers within terms of the International Conference for Safe Containers. (This term and its definition are approved for inclusion in the next edition of Joint Pub 1-02.)

**breakbulk cargo.** Any commodity that, because of its weight, dimensions, or noncompatibility with other cargo, must be shipped by mode other than MILVAN or SEAVAN. (This term and its definition are approved for inclusion in the next edition of Joint Pub 1-02.)

**breakbulk ship.** A ship with conventional holds for stowage of breakbulk cargo, below or above deck, and equipped with cargo-handling gear. Ships also may be capable of carrying a limited number of containers, above or below deck. (This term and its definition are approved for inclusion in the next edition of Joint Pub 1-02.)

**centralized receiving and shipping point.** Actual location where containers with cargo must be sorted before transshipment to the appropriate SSA or owning unit. Single consignee cargo and ammunition will not pass through the centralized receiving and shipping point. Cargo will be shipped directly to the owner with the movement organization maintaining visibility and ammunition will go directly to the appropriate ammunition storage facility. Also called CRSP. (This term and its definition are approved for inclusion in the next edition of Joint Pub 1-02.)

**common use.** Services, materials, or facilities provided by a Department of Defense agency or a Military Department on a common basis for two or more Department of Defense agencies. (Joint Pub 1-02)

**common use container.** Any Department of Defense-owned, leased, or controlled 20 or 40 foot International Organization for Standardization container managed by USTRANSCOM as an element of the Department of Defense common use container system. (This term and its definition are approved for inclusion in the next edition of Joint Pub 1-02.)

**common-user military land transportation.** Point-to-point land transportation service operated by a single-Service for common use by two or more Services. (Joint Pub 1-02)

**component-owned container.** 20- or 40- foot International Organization for Standardization container procured and owned by a single Department of Defense Component. May be either on an individual unit property book or contained within a component pool (e.g., USMC Maritime Prepositioning Force containers). May be temporarily assigned to the Department of Defense common-use container system. Also called a Service-unique container. (This term and its definition are approved for inclusion in the next edition of Joint Pub 1-02.)

**container.** An article of transport equipment that meets American National Standards Institute/International Organization for Standardization standards designed to be transported by various modes of transportation; designed to facilitate and optimize the carriage of goods by one or more modes of transportation without intermediate handling of the contents and equipped with features permitting its ready handling and transfer from one mode to another. Containers may be fully enclosed with one or more doors, open top, refrigerated, tank, open rack, gondola, flatrack, and other designs. (This term and its definition are provided for information and are proposed for inclusion in the next edition of Joint Pub 1-02 by Joint Pub 4-01.)

**Container Control Officer.** A designated official (E6 or above or civilian equivalent) within a command, installation, or activity who is responsible for control, reporting, use, and maintenance of all Department of Defense-owned and controlled intermodal containers and equipment. This officer has custodial responsibility for containers from time received until dispatched. (This term and its definition are approved for inclusion in the next edition of Joint Pub 1-02.)

**Container Fleet Division.** Subordinate element of Military Traffic Management Command responsible for administration of all Army containerized ammunition distribution system and United States Transportation Command common-use containers. Also called CFD. (This term and its definition are approved for inclusion in the next edition of Joint Pub 1-02.)

**container handling equipment.** Items of materials handling equipment required to specifically receive, maneuver, and dispatch International Organization for Standardization containers. Also called CHE. (This term and its definition are approved for inclusion in the next edition of Joint Pub 1-02.)

**container number.** A van, ISO, and container number in this publication are considered the same. (This term and its definition are applicable only in the context of this pub and cannot be referenced outside this publication.)

**containerization.** The use of containers to unitize cargo for transportation, supply and storage. Containerization incorporates supply, transportation, packaging, storage and security together with visibility of container and its contents into a distribution system from source to user. (This term and its definition are approved for inclusion in the next edition of Joint Pub 1-02.)

**containership.** A ship specially constructed and equipped to carry only containers without associated equipment, in all available cargo spaces, either below or above deck. Containerships are usually non-self-sustaining and do not have built-in capability to load or off-load containers, and require port crane service.

A containership with shipboard-installed cranes capable of loading and off-loading containers without assistance of port crane service is considered self-sustaining. (This term and its definition are approved for inclusion in the next edition of Joint Pub 1-02.)

**Defense Business Operations Fund.** A revolving industrial fund concept for a large number of Defense support functions, including transportation. Utilizes business-like cost accounting to determine total cost of a business activity. Defense Business Operations Fund-Transportation is comprised of those Defense Business Operations Fund accounts assigned by OSD for USCINCTRANS control. Also called DBOF. (This term and its definition are approved for inclusion in the next edition of Joint Pub 1-02.)

**Defense Transportation System.** That portion of the Nation's transportation infrastructure that supports DOD common-user transportation needs across the range of military operations. It consists of those common-user military and commercial assets, services, and systems organic to, contracted for, or controlled by the Department of Defense. Also called DTS. (Joint Pub 1-02)

**Department of Defense container system.** All Department of Defense-owned, leased, controlled 20- or 40-foot intermodal International Organization for Standardization containers and flatracks, supporting equipment such as generator sets and chassis, container handling equipment, information systems, and other infrastructure that supports DOD transportation and logistics operations, including commercially provided transportation services. This also includes 463L pallets, nets, and tie-down equipment as integral components of the DOD Intermodal Container System. Size and configuration of the common-use portion of the DOD container system controlled by USTRANSCOM, will be determined by USTRANSCOM based on established requirements and availability of commercially owned containers and equipment. USTRANSCOM will lease or procure additional containers as required to augment the DOD container system. (This term and its definition are approved for inclusion in the next edition of Joint Pub 1-02.)

**Department of Defense intermodal container system.** See Department of Defense Container System.

**destination.** The place where a container movement ceases. The destination may be the ultimate user or consumer of container contents, a retail supply point, or a consolidation and distribution point. (This term and its definition are approved for inclusion in the next edition of Joint Pub 1-02.)

**flatrack.** Portable, open-topped, open-sided units that fit into existing below-deck container cell guides and provide a capability for container ships to carry oversized cargo; and wheeled and tracked vehicles. (This term and its definition are approved for inclusion in the next edition of Joint Pub 1-02.)

**infrastructure.** A term generally applicable to all fixed and permanent installations, fabrications, or facilities for the support and control of military forces. (Joint Pub 1-02)

**Institute of International Container Lessors.** A technical committee consisting of container owners, operators, and manufacturers located in Bedford, NY, who prepare the Repair Manual for Steel Freight Containers. The repair manual implements the physical standards for general cargo containers established by the

International Convention for Safe Containers (CSC-International Safe Container Act of 1980, 46 U.S.C. 1503). Also called IICL. (This term and its definition are approved for inclusion in the next edition of Joint Pub 1-02.)

**intermodal.** Type of international freight system that permits transshipping among sea, highway, rail and air modes of transportation through use of American National Standards Institute/International Organization for Standardization containers, line-haul assets and handling equipment. (This term and its definition are approved for inclusion in the next edition of Joint Pub 1-02.)

**intermodal support equipment.** Fixed and deployable assets required to assist container operations throughout the intermodal container system. Included are straddle cranes, chassis, rough terrain container handlers, container cranes and spreader bars. (This term and its definition are approved for inclusion in the next edition of Joint Pub 1-02.)

**intermodal systems.** Specialized transportation facilities, assets, and handling procedures designed to create a seamless transportation system by combining multimodal operations and facilities during the shipment of cargo. (This term and its definition are provided for information and are proposed for inclusion in the next edition of Joint Pub 1-02 by Joint Pub 4-01.)

**International Convention for Safe Containers.** A convention held in Geneva, Switzerland, on 2 Dec 1972, which resulted in setting standard safety requirements for containers moving in international transport. These requirements were ratified by United States on 3 January 1978. Also called CSC. (This term and its definition are approved for inclusion in the next edition of Joint Pub 1-02.)

**International Organization for Standardization.** A specified international agency for standardization. This agency is comprised of members from more than 80 countries. The agency's aim is to promote worldwide agreement of international standards. Also called ISO. (This term and its definition are approved for inclusion in the next edition of Joint Pub 1-02.)

**in-transit visibility.** The capability provided to a theater combatant commander to have visibility of units, personnel, and cargo while in transit through the Defense Transportation System. (Joint Pub 1-02)

**joint logistics over-the-shore.** Logistics over-the-shore operations conducted by two or more Military Services. (This term and its definition are approved for inclusion in the next edition of Joint Pub 1-02.)

**logistics over-the-shore operations.** The loading and unloading of ships without the benefit of fixed port facilities, in friendly or nondefended territory, and, in time of war, during phases of theater development in which there is no opposition by the enemy. Also called LOTS. (This term and its definition are approved for inclusion in the next edition of Joint Pub 1-02.)

**long ton.** 2,240 pounds. Also called L/T or LTON. (This term and its definition are approved for inclusion in the next edition of Joint Pub 1-02.)

**materials handling equipment.** Mechanical devices for handling of supplies with greater ease and economy. (Joint Pub 1-02)

**measurement ton.** Volume measurement equal to 40 cubic feet. Also called M/T or MTON. (This term and its definition are approved for inclusion in the next edition of Joint Pub 1-02.)

**military performance specification containers.** Written standards containers must meet. Aviation and Troop Command, US Army, procures military performance specification containers for Army and will perform like services for other Department of Defense Components on request. Also called MILSPEC container. (This term and its definition are approved for inclusion in the next edition of Joint Pub 1-02.)

**Military Sealift Command.** A major command of the US Navy, and the US Transportation Command's component command responsible for designated common-user sealift transportation services to deploy, employ, sustain, and redeploy US Forces on a global basis. Also called MSC. (This term and its definition are provided for information and are proposed for inclusion in the next edition of Joint Pub 1-02 by Joint Pub 4-01.)

**Military Traffic Management Command.** A major command of the US Army, and the US Transportation Command's component command responsible for designated, continental United States land transportation, and common-user water terminal and traffic management service to deploy, employ, sustain, and redeploy US Forces on a global basis. Also called MTMC. (This term and its definition are provided for information and are proposed for inclusion in the next edition of Joint Pub 1-02 by Joint Pub 4-01.)

**MILVAN.** Military-owned demountable container, conforming to United States and international standards, operated in a centrally controlled fleet for movement of military cargo. (Joint Pub 1-02)

**movement control team.** Movement control teams (MCTs) are Army units that decentralize the execution of movement responsibilities on an area basis or at key transportation nodes. The mission of MCTs is movement control of personnel and materiel and the coordination of bulk fuel and water transportation at pipeline and production take-off points. To this end, the MCTs contribute to the development of procedures, documents, and practices to facilitate local movement. Their role is to expedite, coordinate, and monitor traffic moving through the transportation system. MCTs are tailored to meet the anticipated workload. Other service movement requirements that exceed their organic capability will be requested through the Army MCTs. The Movement Control Center (MCC) is the higher headquarters for the MCTs and is located at Corps level. Also called MCT. (This term and its definition are approved for inclusion in the next edition of Joint Pub 1-02.)

**non self-sustaining containership.** A containership that does not have a built-in capability to load or off-load containers, and requires a port crane or craneship service. (This term and its definition are approved for inclusion in the next edition of Joint Pub 1-02.)

**origin.** Beginning point of a deployment where unit or non-unit-related cargo or personnel are located. (Joint Pub 1-02)

**palletized load system.** A truck with hydraulic load handling mechanism, trailer and flatrack system capable of self-loading and -unloading. Truck and companion trailer have a 16.5 ton payload capacity. Also called PLS. (This term and its definition are approved for inclusion in the next edition of Joint Pub 1-02.)

**palletized load system flatrack.** Topless, sideless container component of palletized load system, some of which conform to ISO specifications. (This term and its definition are approved for inclusion in the next edition of Joint Pub 1-02.)

**Sealift Enhancement Program.** Special equipment and modifications which adapt merchant-type dry cargo ships and tankers to specific military missions. They are typically installed on Ready Reserve Force ships or ships under Military Sealift Command control. Sealift enhancements fall into three categories: productivity, survivability, and operational enhancements. Also called SEP. (This term and its definition are approved for inclusion in the next edition of Joint Pub 1-02.)

**seavan.** Commercial or Government owned (or leased) shipping containers which are moved via ocean transportation without bogey wheels attached, i.e., lifted on and off the ship. (Joint Pub 1-02)

**self-sustaining containership.** A containership with shipboard-installed cranes capable of loading and off-loading containers without assistance of port crane service. (This term and its definition are approved for inclusion in the next edition of Joint Pub 1-02.)

**Service-unique container.** Any 20- or 40-foot International Organization for Standardization container procured or leased by a Service to meet Service-unique requirements. (This term and its definition are approved for inclusion in the next edition of Joint Pub 1-02.)

**shelter.** An International Organization for Standardization container outfitted with live- or work-in capability. (This term and its definition are approved for inclusion in the next edition of Joint Pub 1-02.)

**short ton.** 2,000 pounds. Also called S/T or STON. (This term and its definition are approved for inclusion in the next edition of Joint Pub 1-02.)

**single manager.** A Military Department or Agency designated by the Secretary of Defense to be responsible for management of specified commodities or common service activities on a Department of Defense-wide basis. (Joint Pub 1-02)

**stuffing.** Packing of cargo into a container. (This term and its definition are approved for inclusion in the next edition of Joint Pub 1-02.)

**supply support activity.** Activities assigned a DOD activity address code and that have a supply support mission, i.e., direct support supply units, missile support elements, maintenance support units. (This term and its definition are approved for inclusion in the next edition of Joint Pub 1-02.)

**tare weight.** The weight of a container deducted from gross weight to obtain net weight or the weight of an empty container. (This term and its definition are approved for inclusion in the next edition of Joint Pub 1-02.)

**theater-assigned transportation assets.** Transportation assets that are assigned under the combatant command (command authority) of a geographic commander. (This term and its definition are provided for information and are proposed for inclusion in the next edition of Joint Pub 1-02 by Joint Pub 4-01.)

**throughput.** The average quantity of cargo and passengers that can pass through a port on a daily basis from arrival at the port to loading onto a ship or plane, or from the discharge from a ship or plane to the exit (clearance) from the port complex. Throughput is usually expressed in measurement tons, short tons, or passengers. Reception and storage limitation may affect final throughput. (Joint Pub 1-02)

**transportation component command.** The three component commands of USTRANSCOM: Air Force Air Mobility Command, Navy Military Sealift Command, and Army Military Traffic Management Command. Each transportation component command remains a major command of its parent Service and continues to organize, train, and equip its forces as specified by law. Each transportation component command also continues to perform Service-unique missions. Also called TCC. (Joint Pub 1-02)

**traverse racking test load value.** Externally applied force in pounds or kilograms at the top-corner fitting that will strain or stretch end structures of the container sideways. (This term and its definition are approved for inclusion in the next edition of Joint Pub 1-02.)

**United States Transportation Command.** The unified command with the mission to provide air, land, and sea transportation for the Department of Defense, across the range of military operations. Also called USTRANSCOM. (This term and its definition are provided for information and are proposed for inclusion in the next edition of Joint Pub 1-02 by Joint Pub 4-01.)

**unstuffing.** Removal of cargo from container(s). (This term and its definition are approved for inclusion in the next edition of Joint Pub 1-02.)

# JOINT DOCTRINE PUBLICATIONS HIERARCHY

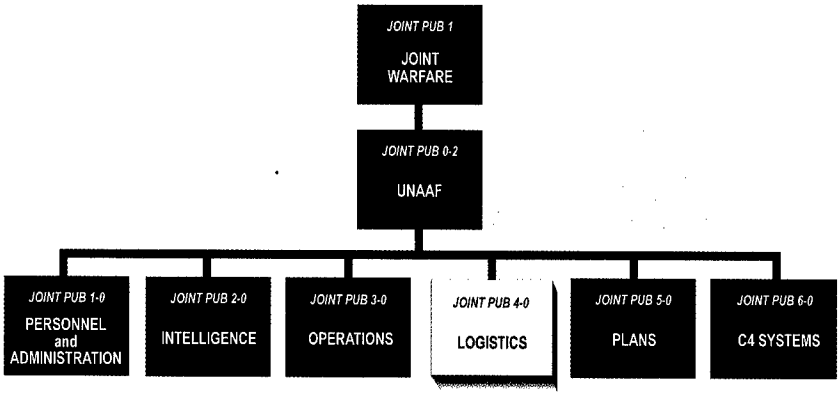

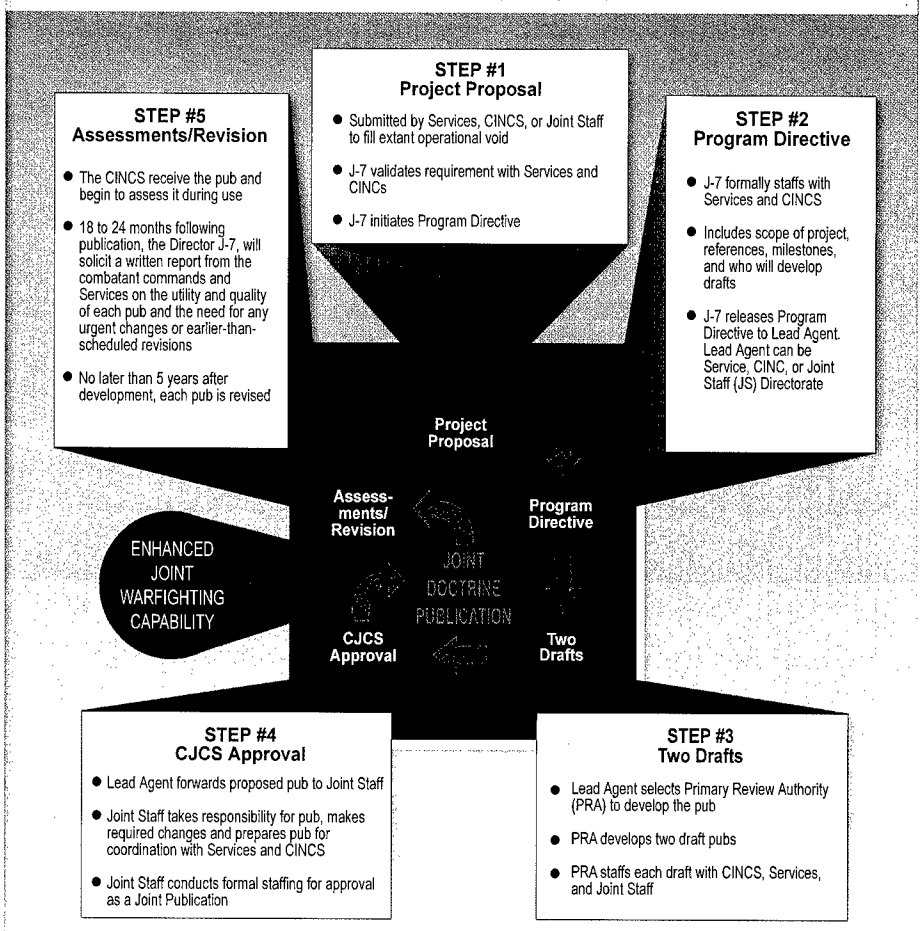
All joint doctrine and tactics, techniques, and procedures are organized into a comprehensive hierarchy as shown in the chart above. **Joint Pub 4-01.7** is in the **Logistics** series of joint doctrine publications. The diagram below illustrates an overview of the development process: