DEVELOPMENT OF A TEST TO MEASURE THE TENDENCY FOR A HOT-MIX ASPHALT TO SEGREGATE

Final Report

February 2000

JHR99-274 Project 98-1

Dr. Jack E. Stephens
James Mahoney
Cory Dippold

This research was sponsored by the Joint Highway Research Advisory Council (JHRAC) of the University of Connecticut and the Connecticut Department of Transportation and was carried out at the Connecticut Transportation Institute of the University of Connecticut.

The contents of this report reflect the views of the authors who are responsible for the facts and accuracy of the data presented herein. The contents do not necessarily reflect the official views or policies of the University of Connecticut or the Connecticut Department of Transportation. This report does not constitute a standard, specification, or regulation.

Technical Report Documentation Page

1. Report No. JHR99-274	2. Government Accession No. N/A	3. Recepient's Catalog No. N/A
4. Title and Subtitle Development of a Test to Predict the Tendency for a Hot Mix Asphalt to Segregate		5. Report Date October 1999 6. Performing Organization Code N/A
7. Author(s) Dr. Jack E. Stephens, James Mahoney, Cory Dippold		8. Performing Organization Report No. CAPLab 99-3
9. Performing Organization Name and Address University of Connecticut Connecticut Advanced Pavement Lab Connecticut Transportation Institute Storrs, CT 06269-3037		10 Work Unit No. (TRAIS) N/A 11. Contract or Grant No. N/A
12. Sponsoring Agency Name and Address Connecticut Department of Transportation 280 West Street Rocky Hill, CT 06067-0207	Connecticut Bituminous Concrete Association 178 Ravine Road Storrs, CT 06268	13. Type of Report and Period Covered Final 14. Sponsoring Agency Code N/A
15 Supplementary Notes N/A		

16. Abstract

Hot-Mix Asphalt tends to segregate during handling and placement. The use of a test to determine the tendency to segregate would assist the user in determining when a mix gradation needs adjustment to avoid construction of a segregated pavement or when special care in handling would assist in avoiding segregation.

A number of mixes were subjected to a free fall onto an inclined plane followed by a second free fall from the toe of the inclined plane. The resulting pile of material was divided approximately into halves, that horizontally near the toe of the plane and that farthest away. The two halves were then analyzed for gradation and asphalt content and a computation of the accumulation of percent passing the series of sieves (each ½ of the preceding sieve size opening from 18.75 mm to 0.075 mm)

The average and standard deviation for three or more tests of each material were then compared. The difference for this value for close and far parts of a mix is the area between the two gradation curves and a measure of segregation occurring. A first estimate is made for a value that differentiates potential problem mixes.

17. Key Words Hot-Mix Asphalt, Segregation	18. Distribution Statement No restrictions. This document is available to the public through the National Technical Information Service, Springfield, VA 22161		
19. Security Classif. (of this report) Unclassified	20. Security Classif. (of this page) Unclassified	21. No. of Pages	21. Price N/A

Form DOT F 1700.7 (8-72) Reproduction of completed page authorized

PREFACE

This is the final report on JHRAC Project 98-1 entitled "Development of a Test to Predict the Tendency for a Hot-Mix to Segregate." The Connecticut Department of Transportation Task Force for Improvement of Hot-Mix Pavement has been concerned for some time with open areas in new pavements. Deterioration frequently starts in the more open areas such as where trucks change. Development of a test to determine the tendency of a mix to segregate was thought to be a first step as it would identify mixes that could have a segregation problem before the material was placed. If the segregation tendency was strong, the mix could be modified. A weaker tendency could alert the handlers to exercise more care in handling.

This work was sponsored by the Joint Highway Research Advisory Council at the University of Connecticut and the Connecticut Bituminous Concrete Association. The Joint Council was founded nearly 40 years ago to carry out research of interest to both ConnDOT and UConn researchers. In addition to assisting with the funding, several members of the Association assisted by supplying quantities of field mixes.

TABLE OF CONTENTS

	Page
Title Page	i
Technical Report Documentation	ii
Preface	iii
Table of Contents	iv
List of Figures	v
List of Tables	vi
Chapter 1: Introduction	1
1.1 Problem Statement	1
1.2 Intent of Research	1
1.3 Organization of Report	2
Chapter 2: Geometry of Test	3
Chapter 3: Tests of Surface Texture of Impact Plane	5
Chapter 4: Recommended Test Procedure	6
Chapter 5: Tests of Mixes	7
Chapter 6: Conclusions and Recommendations	9
Appendix A – Hot Mix Plant Tests, July 99	16
Appendix B – Hot Mix Plant Tests, November 98	20
Appendix C – RAP Mix Plant Tests, July 99	21

List of Figures

	Page
Figure 1: Test Geometry	10
Figure 2: Gradation Plot	11

List of Tables

	Page
Table I: Geometry of Tests	12
Table II: Wax Paper Surface Data	13
Table III: Effect of Gradation	14
Table IV: Summary of Plant Mix Properties from Appendices A, B and C	15

CHAPTER 1.0

INTRODUCTION

1.1 PROBLEM STATEMENT

Inspection of the surface of pavement sections frequently reveals differences in the degree of openness. The ConnDOT Task Force for Hot Mix Asphalt Pavement Improvement was formed primarily to address the problem of segregation in hot-mixes. In many projects, open textured areas were seen which correlated with truck exchanges. The Segregation Sub-Committee of the Task Force made up of representatives of both ConnDOT and the industry recommended procedures intended to reduce this material handling problem. The segregation problem appears to have become increasingly serious as production and the use of silos increased.

Piles which form in silos and during loading of trucks frequently cause the mix to segregate. As the pile of hot-mix in the truck or silo grow higher, coarse aggregate of the incoming material tends to roll down to the foot of the pile, leaving the finer portions at the top and center of the pile. In silos, this may cause the material on one side or in the outside perimeter to be coarser than that in the center. In truck beds, this puts concentrations of coarse material around the perimeter of the truck bed. The last material out of a truck would then tend to be coarser as would the first material out of the next truck.

The task force recommended that trucks be loaded in three positions, front, rear and mid bed. This would reduce the length of pile slope thus reducing the segregation occurring within a truck. This loading method would also help to recombine coarse and fine portions from the silo. A second recommendation was that the truck bed be raised partway before the tailgate was released. Releasing the tailgate with the bed level permitted the coarse material at the rear perimeter of the loaded pile inside to flow out first. Opening the tailgate with the bed raised would cause some of the central material in the pile to join the perimeter in flowing out thus re-mixing to some extent the coarse perimeter with the central fines.

Some mixes appear to be more readily subject to this handling segregation than others. It then appeared that if a test was developed to measure the tendency for handling segregation to occur, it would be possible to identify mixes that should be altered or at least handled more carefully.

1.2 INTENT OF RESEARCH PROJECT

The prime goal of the project was to develop a test that would define the tendency of a hot-mix to segregate under the handling between production and the placement. The only handling of the bulk of the mix in this period is dropping into the haul unit, dropping into the paver hopper and paver spreading. The test should use equipment currently in the typical mix plant laboratory. The test should result in a test value that can be compared to both the value found for mixes that frequently have segregation problems and that found for those that rarely segregate.

1.3 ORGANIZATION OF REPORT

The geometry of the test set up is presented in Chapter 2. The setup is intended to simulate the conditions of mix being dropped onto a pile of mix much like what occurs when loading a truck at the mix plant. Arriving at geometry that differentiated between mixes required several tests.

Speed of travel down a rough slope could be slower than that down a smooth surface, affecting the resulting degree of segregation. If the surface of the sloping plane were textured like a pile of mix, cleaning test surface would be very difficult. Chapter 3 discusses tests of different slope surface textures.

Chapter 4 provides a step by step description of the proposed test. The first trials, using laboratory mixes, are presented in Chapter 4. Aggregate gradations were similar to those used in Connecticut.

As plant mixes can differ significantly from laboratory mixes, the procedures were lastly applied to plant mixes. ConnDOT field personnel identified 2 plants from which mix rarely tends to segregate and two that tend to be troublesome. The results presented in Chapter 5 provide a first estimate for the boundary between mixes that do and don't segregate.

Conclusions and recommendations make up Chapter 6.

CHAPTER 2

GEOMETRY OF TEST

A rather basic principle of dynamics is that momentum increases with mass. This principal explains much of the segregation associated with free fall of the mix into and out of the transport vehicle. At the end of free fall, the coarser particles roll farther down the growing mound because of their greater mass. To truly measure the trend toward segregation, the geometry of the test must utilize this difference in momentum. The basic geometry selected was a free drop of the hot-mix sample onto a sloping plane with a slope typical of a growing pile. After traveling a short distance down the plane, the mix again fell to a receiving surface (Figure 1). Landing position on this last surface depends on the particle size and the degree of cohesion of the mix. The fine portion of the mix tends to drip from the lip of the slope while the coarser particles having more momentum tend to bound out from the lip of slope. Cohesion of the binder tends to bind the fines to the coarse particles and resist the segregation.

Several sets of dimensions were tried (Table I). It quickly became apparent that the first free fall must be great enough to provide sufficient momentum to challenge the mix. In addition, the length of the slide on the unheated surface had to be limited to prevent a reduction in movement due to the cooling of the mix. For the first trials, the receiving surface was a simple flat sheet metal panel. When all motion had ceased, a sheet metal panel was forced down into the pile dividing the pile into two parts. The plane of separation was approximately vertical and perpendicular to the axis of the slope resulting in a portion just in front of the toe of slope, which in the tables is referred to as Near portion, and a portion more removed referred to as Far. As the testing progressed, two rectangular pans with two inch sides were used on the receiving surface. Placed tight together with the sides located along the middle of where the pile would form, the pans automatically made the division of the pile. The asphalt content and gradation of the two mix halves were then determined. As the hopper at the start of the test was funnel shaped, opening the discharge resulted in a stream of material rather than a solid mass.

The two gradations can be plotted on a 0.45 root graph for comparison, (Figure 2). The summation of the percents passing the sieves in the series represents the area under the gradation curve. At any sieve size, the difference between the percents passing that sieve for the two is the vertical distance between the two plotted curves. The difference in the summations for the two halves of the mix is then a convenient measure of the total difference in gradations. The greater this difference between mixes the greater is the segregation as caused by these test conditions. A comparison of these differences for the same mixes under different test geometry is found in the bottom line of Table 1. Larger free fall with a short path on the slope resulted in greater differences.

All later tests were done with the dimensions constant (Figure 1). The free fall was set at 32 inches measured vertically from the center of the sample discharge port to the point of impact. The slope of the plane was 9 vertical over 10 horizontal. Path on the incline measured vertically from the point of impact to lower tip of the plane was 10 inches. The

last free fall was 15 inches. The actual point of separation was only 13 inches below the slope tip as the pan sides rose two inches.

The amount of mix dropped on the slope was set so that each half was less than the capacity of the ignition oven. The ignition oven was used to burn the asphalt out of the mix to allow the gradations to be determined. A mass of 6 to 7 thousand grams worked well.

CHAPTER 3

TEST OF SLOPE SURFACE

Maintaining the condition of the slope surface proved time consuming. A series of tests was carried out in an attempt to find an easily renewed surface. Saran wrap, a temperature stable plastic sheeting, and wax paper were tried as surface covers. Ordinary kitchen wax paper performed well and could be replaced after each test. The mix traveling down the inclined plane did not spread out laterally so the test was not sensitive to the width of the plane. For convenience the width was made just over 12 inches so that kitchen wax paper could be applied without cutting. The wax paper was held only by paper clamps at the upper end of the slope. The downward movement of the mix held the paper taunt.

The mixes in Table II provide a measure of the effect of slope surface. The researchers expected a greater variation with surface texture. As cleaning a highly textured surface after each test would be difficult and time consuming. The use of a highly textured surface was not attempted. A surface as textured as a pile of mix would certainly slow the travel down the slope, reducing the momentum of both fine and coarse aggregate. The momentum difference between material headed for the Near and the Far portions of the pile would then be reduced, making selection of the separation plane between Near and Far more critical for test reproducibility. All 1999 testing used the wax paper surface.

CHAPTER 4

RECOMMENDED TEST PROCEDURE

1. Start with a representative sample of the mix from the plant. Obtaining representative samples of a mix can be difficult. A sampler on a platform adjacent to a truck bed has better access to the perimeter of the load than to the central portion. The perimeter surface of a truck load can always be expected to be the coarsest in the truck. Ideally for comparison, samples that truly represent the material are desirable. If necessary, make a lab mix representative of the mix. Sample size chosen depends on the procedure to be used for recovering the aggregate. The test will separate the sample into roughly equal halves. A mass of 6,500 grams resulted in halves that easily went into the 4,000 gram capacity ignition oven. If solvent extraction is to be used, select a quantity that can be completely processed in 2 centrifuge batches.

2. Set up the test assembly of Figure 1 with two pans on the receiving surface and new wax paper on the slope. The funnel bottom is closed with a slide such that there is no ledge to retain any of the sample when opened.

3. Thoroughly heat the sample to 155^0 C and pour into the upper discharge funnel.

4. Pull the slide dropping the sample onto the inclined plane.

5. Recover and grade the aggregate of the two portions separately. Use the sieve series of 0.075 to 19 mm with a 12.5 mm sieve inserted after the 19 mm.

6. Compute the percentage passing each sieve and total up the percentages passing for each half.

7. The difference between the two totals is the measure of the segregation tendency of the mix. The necessary computations can be seen in Tables I to VI and Appendices A to C, where half gradations are totaled in the central and right portions of the table and differences found in the lower right corner.

CHAPTER 5

MIX TESTS

Gradation and binder content are two major factors in creating and controlling segregation during the handling of hot-mixes. The mixes presented in Tables I through III show that gradation can have an effect on the tendency to segregate. The tests are presented in different tables in an attempt to simplify comparisons. The background information on each mix is limited to the mix gradation and asphalt content. All utilized crushed material for coarse aggregate. Since segregation means change in gradation, the difference in the area under the gradation curve is the obvious indicator of segregation. This area is directly proportional to the difference in the sum of the percents passing the sieves of the gradation series. The area under the curve for a coarse gradation is less than under the curve for a dense or fine gradation.

Samples j – 1 & 2 in Table III show that changing the gradation did bring about a change in the difference of the area under the curves for the two halves. Sample j-2 was of a coarser gradation than sample j-1, as the summation of the percents passing for the original material is smaller. The two had very similar asphalt contents. The difference in gradation of the test halves for the coarser mix (j-2) was double that of the finer mix, 179.3 compared to 86.9. Samples k-1 and k-2 in Table III had the same gradation with total percentages passing of 474.1 and 474.3, at similar asphalt contents of 6.07 and 6.09. The test resulted in gradation differences of 148.6 and 144.1 which indicates that reproducibility of the test is good.

The question of whether an increase in binder will increase or decrease the segregation probably depends on the starting asphalt content. Increasing a low binder content could increase the internal mix tackiness and reduce segregation. Increasing a high content could cause the fines and asphalt to drip off the plane and indicate a greater tendency to segregate. The best comparison of different binder content is the n-1 mix in Appendix A and the r-4 mix of Appendix B. The n and r mixes came from the same plant. The original gradations of the two were quite similar, totaling to 456.9 and 459.4 but r-4 had almost 1 percent more binder which resulted in double the total gradation difference for the halves, 166 compared to 82.8. The 82.8 is one of the lowest values, implying that the 5.48 % binder is ideal for this gradation. Further reduction would probably increase the half gradation difference as the mix would start to lose its tackiness.

As laboratory mixes and plant mixes often behave quite differently, testing of true plant mixes was undertaken to establish the validity of the test method. Field personnel of the Connecticut Department of Transportation were asked to designate both some plants from which the mix was rarely observed to have a segregation problem and some that frequently did. Appendix A lists the results of tests on 1999 samples of the mixes from two plants in each category. For ease in comparisons, critical factors have been accumulated in Table IV. Plants n and p were listed as rarely having observable segregation and plants o and q were listed as frequently troublesome. Of the sixteen tests

carried out, the three lowest half differences occurred for samples from the plants designated as rarely having segregation. Unfortunately, there is no hard information available as to whether any of the samples taken at the plants coincided with segregation at laydown.

Appendix B presents results for samples r-1 to r-4 which came from the same plant as samples n-1 to n-4. The r samples were taken in November 98 and the n samples in July 99. The gradation and asphalt content appear similar but the difference in gradation of the halves are quite different having gone from an average of 167.1 down to 110.4. This implies that the tendency of the material to segregate has been reduced. This could be due to particle shape, the third factor in segregation. A change as simple as changing the percentage of natural to manufactured sand will affect the tendency to segregate.

Mixes incorporating recycled asphalt pavement (RAP) have become more common. The relationship between gradation of recovered aggregate and the tendency to segregate may be different than that for virgin mixes. Appendix C presents the tests for RAP mixes from two plants. The total gradation values were obtained by grading the residue after burning the binder out in the ignition oven. The half mix differences are in the general range of the values for the virgin mixes but the standard deviations tend to be larger. This is probably the result of some RAP lumps rebounding into the far half like coarse aggregate particles. As the lumps are destroyed by the ignition oven, the fine aggregate in the lumps then reduces the coarseness of the Far half. As the lumpiness of the RAP is difficult to control, variation from sample to sample can be expected.

Table IV assembles the critical material from Tables I, II and III and Appendixes A, B and C in easy to review form. The average total gradation figures for the rarely segregating plants were the largest (finest) and those for the RAP mixes the lowest (coarsest). Of the 1999 tests, the average difference between halves was lowest for one of the rarely segregating plants and the highest for one of the segregating plants. The RAP mixes did well falling within the range of the virgin mixes.

CHAPTER 6

CONCLUSIONS AND RECCOMMENDATIONS

Test results indicate that the test is sensitive to mix tendency to segregate. The test uses equipment readily available in an asphalt mix laboratory. The test has potential use both by the mix plant and by the mix user. When field observations indicate that a mix may result in segregation, the test will assist in assigning responsibility for such segregation to the proper cause. If the difference in the summation of percent passing for the two mix halves is low, the mix is relatively stable and any segregation is probably due to poor handling practices during hauling and lay down. Training of the field crews should be undertaken. If the difference is large, the indication is that even the best paving crew will be challenged to lay down satisfactorily. The plant would be expected to review the mix and adjust as needed. A core from a segregated area cannot be used alone for this test, as the mix is already segregated. The difference between the two halves has a different value than that between the two halves of a representative sample of the original mix. Cores will aid in establishing a scale for the results of this test. Comparison of the summations of aggregate gradations of cores taken at different points in a pavement should establish a measure of the tendency for the mix to segregate.

The data from this testing program shows that of the 35 tests using a fall of 31 or 32 inches, some 19 were below 110 for the difference in accumulated percentage passing for the two halves. Until more data has been collected, it appears that mixes which give test results of more than 110 are suspect. This value should be considered as provisional until enough tests have been performed on samples to permit a truly sound statistical decision. The state should require tests on all mixes in order to build a data pool. Such field data may show that a single cutoff value is unsatisfactory. That is, data may show a range for which there is never a problem. The result would then be: a maximum value for the difference in summation of percents passing for the two test halves above which the mix would not be acceptable, a minimum value below which the mix would never be questioned, and a range between the two that would cause a tightening of the field quality control to ensure a good product.

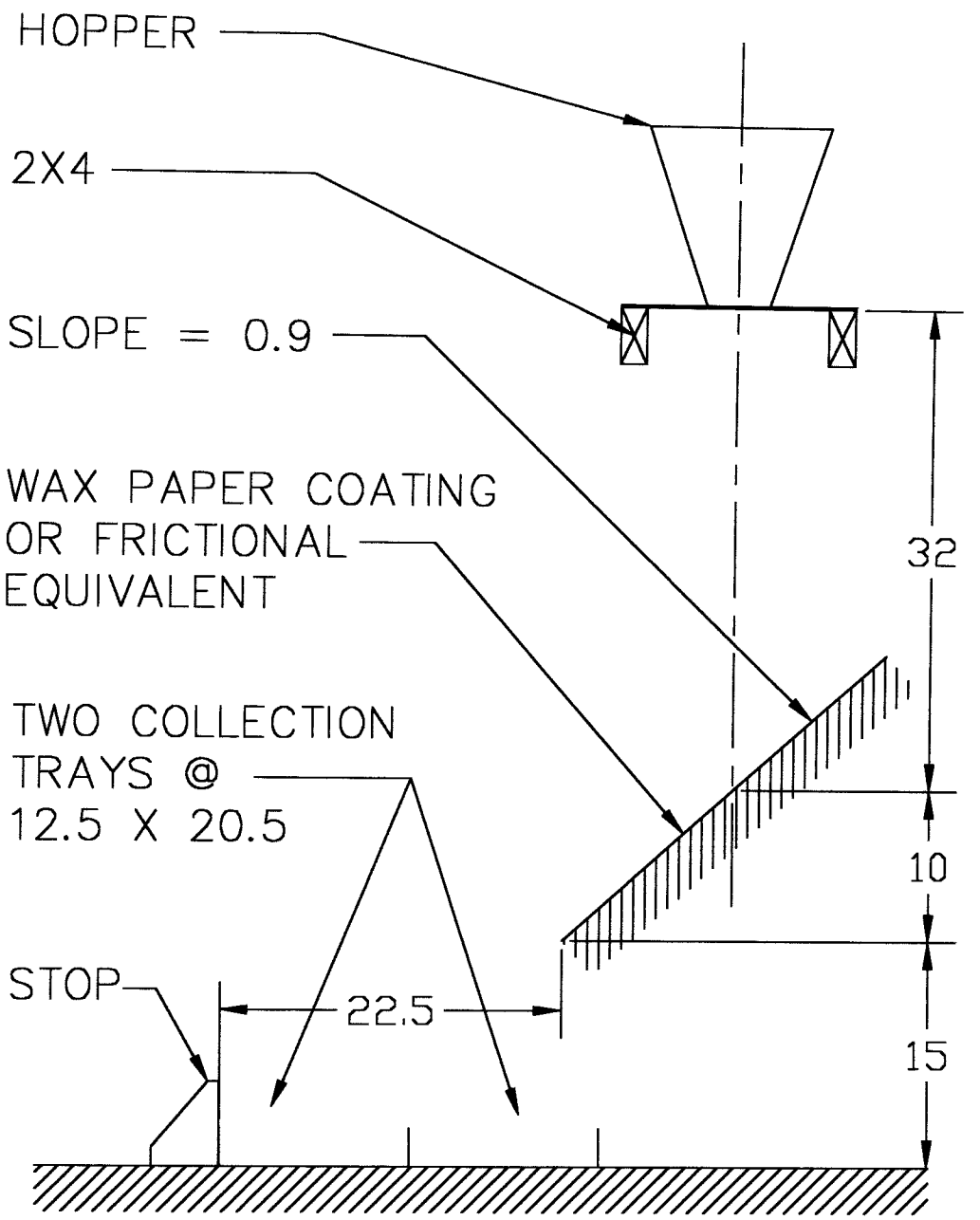

NOTE: ALL UNITS ARE INCHES

TYPICAL SEGREGATION TESTING APPARATUS

NOT TO SCALE

Figure 1

Figure 2 Gradations, Sample n-2

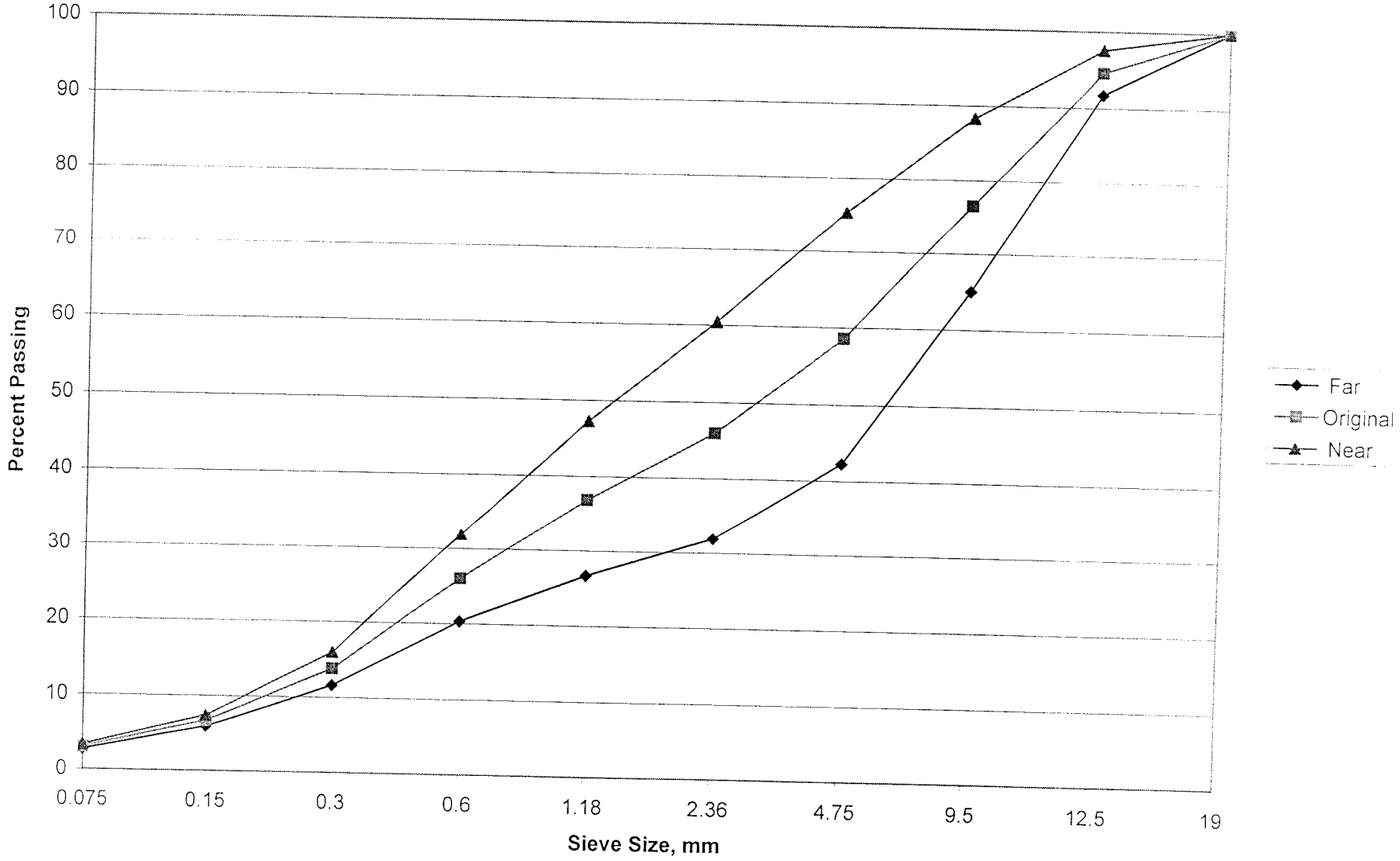

TABLE I GEOMETRY OF TESTS

Sample	a	b	c	d		a	b	c	d		a	b	c	d
Free Fall, in.	12	18	20	31										
Slope	2.25	1.25	0.875	0.875										
Ht on plane,in	17.5	22	8	8										
2nd fall, in.	15	15	16	16										
A C, %	5.56	5.06	5.45	5.47										
Avg, AC, %	5.385 %	St Dev 0.19%												
	Original Gradation					Far Gradation					Near Gradation			
Sieve, mm	%	%	%	%		%	%	%	%		%	%	%	%
19	100	99.9	100	100		100	100	100	100		100	99.8	100	100
12.5	99.3	99.2	98.8	99.3		98.6	99.1	97.8	98.8		99.8	99.2	99.8	100
9.5	77.6	77.8	77.4	75.8		70.2	68.7	61.6	60.4		83.8	86.2	95.8	96.1
4.75	56.6	55.9	57.2	54.9		46.7	43.9	32.8	32.5		64.8	66.9	85.5	84.0
2.36	44.0	43.9	45.1	43.6		36.8	34.9	25.3	25.4		50.0	52.0	68.1	67.8
1.18	32.1	32.1	32.9	31.9		28.0	26.8	20.6	20.7		35.6	36.9	47.2	46.8
0.6	22.6	22.7	23.1	22.4		20.2	19.8	15.9	15.9		24.6	25.3	31.4	31.0
0.3	14.9	14.9	15.1	14.8		13.5	13.3	11.1	10.9		16.0	16.5	19.8	20.0
0.15	9.5	9.7	9.1	9.5		9.0	8.9	7.4	6.9		10.0	10.4	11.1	12.9
0.075	4.1	4.1	3.5	3.8		4.0	4.3	2.8	2.9		4.2	3.8	4.4	5.0
Total, %	460.6	460.1	462.1	456.1		427.0	419.7	375.4	374.5		488.8	497.1	562.9	564.4
Average Total, %				459.7										
Standard Deviation of Totals				2.23										
Difference of summation of percents passing Near to Far											61.8	77.4	187.5	189.9

TABLE II WAX PAPER & METAL SURFACE DATA

Sample	e	f	g	h	l	e	f	g	h	l	e	f	g	h	l
Surface	Wax Paper			Sheet Metal											
Free Fall, in.	32	32	32	32	32										
Slope	0.9	0.9	0.9	0.9	0.9										
Ht on plane,in	8	8	8	7	7.5										
2nd fall, in.	15	15	15	15	15										
A C, %	6.5	6.5	6.5	6.07	5.95										
Avg AC, %	6.5			6.01											
St Dev AC	0			0.06											
Original Gradation						Far Gradation					Near Gradation				
Sieve, mm	%	%	%	%	%	%	%	%	%	%	%	%	%	%	%
19	100	100	100	100	100	100	100	100	100	100	100	100	100	100	100
12.5	97.8	97.4	98.1	98.0	96.0	96.0	95.0	96.6	96.1	93.7	99.0	99.0	99.4	99.4	98.8
9.5	90.8	90.1	90.5	88.3	81.0	82.7	81.6	84.5	78.8	74.0	96.1	95.7	96.3	95.7	89.3
4.75	75.7	75.9	74.0	71.0	67.6	61.2	62.1	62.5	54.0	57.8	85.3	85.2	85.1	84.1	79.2
2.36	60.2	59.2	58.5	55.3	52.4	45.9	46.0	46.9	38.4	42.8	69.7	68.0	69.6	68.2	63.6
1.18	49.2	48.1	47.4	45.0	42.2	38.1	37.9	38.6	32.1	34.8	56.6	54.8	55.9	55.0	50.9
0.6	36.8	35.5	35.4	33.2	30.9	29.9	29.3	30.4	25.0	26.3	41.4	39.7	40.3	39.5	36.3
0.3	18.0	18.2	18.3	17.6	16.4	15.4	15.9	16.7	14.1	14.4	19.7	19.8	19.9	20.2	18.8
0.15	7.5	8.4	8.3	8.3	7.9	6.0	7.3	7.9	6.7	6.9	8.44	9.2	8.7	9.6	9.0
0.075	2.9	3.4	3.2	3.9	3.3	2.3	3.0	2.9	2.8	2.9	3.3	3.6	3.6	4.8	3.8
Total, %	538.9	536.3	533.6	520.5	497.6	477.6	478.0	486.9	448.0	453.4	579.6	575.0	578.7	576.5	549.5
	Wax Paper			Sheet Metal		Wax Paper			Sheet Metal		Wax Paper			Sheet Metal	
Avg Total, %	536.3			509.1		480.8			450.7		577.8			563.0	
St Deviation of totals	2.15			11.45		4.27			2.70		1.97			13.48	
Difference of summation of percents passing Near to Far											101.9	97.1	91.9	128.5	96.2
Avg. Difference of Summation of percents passing Near to Far												97.0			112.4

TABLE III EFFECT OF GRADATION

Sample	j - 1	j - 2	k - 1	k - 2		j - 1	j - 2	k - 1	k - 2		j - 1	j - 2	k - 1	k - 2
Free Fall, in.	31	32	32.5	32.5										
Slope	0.875	0.875	0.9	0.9										
Ht on plane,in	8	8	7.5	7.5										
2nd fall, in.	16	16	15	15										
A C, %	5.7	5.76	6.07	6.09										
Avg AC, %		5.73		6.08										
	Original Gradation					Far Gradation					Near Gradation			
Sieve, mm	%	%	%	%		%	%	%	%		%	%	%	%
19	100	99.4	100	100		100	98.8	100	100		100	100	100	100
12.5	92.5	85.2	98.4	98.3		88.2	76.3	97.2	97.5		94.7	94.5	99.3	99.1
9.5	78.4	72.0	75.1	75.1		66.8	56.2	61.8	63.0		84.4	88.7	86.2	86.1
4.75	58.5	56.0	53.5	54.1		44.2	36.2	34.7	36.7		65.9	76.9	69.0	69.9
2.36	44.5	43.2	46.0	46.3		33.7	26.7	28.7	30.2		50.1	60.5	60.3	60.9
1.18	33.7	34.2	39.2	39.2		26.8	22.4	25.1	26.1		37.3	46.7	50.8	51.1
0.6	25.9	25.9	30.4	30.4		21.3	18.2	21.0	21.5		29.2	34.0	38.3	38.5
0.3	18.3	16.9	18.8	18.8		15.4	12.6	14.2	14.4		19.8	21.3	22.6	22.7
0.15	10.3	8.2	9.4	8.9		9.0	6.6	7.4	7.0		11.0	9.8	11.0	10.7
0.075	4.0	2.8	3.5	3.1		3.4	2.2	2.7	2.4		4.4	3.3	4.1	3.8
Total, %	466.2	443.5	474.1	474.3		408.9	356.3	392.9	398.7		495.8	535.6	541.6	542.7
Avg Total, %		454.8		474.2			382.6		395.8		495.8		538.6	
Difference of summation of percents passing Near to Far											86.9	179.3	148.6	144.1

TABLE IV Summary of Plant Mix Properties from Appendices A, B and C

Plant	n	o	p	q	r	s	t
Notes					n Plant 98	RAP Mix	RAP Mix
Segregation history by ConnDOT	Rare	Frequent	Rare	Frequent			
Number of tests	4	4	5	3	4	4	3
Avg AC, %	5.6	5.44	5.36	5.24	5.9	5.04	4.82
St Dev AC, %	0.09	0.1	0.15	0.05	0.3	0.05	0.02
Avg Total Orig % pass	461.5	450.8	457.4	453.5	458.8	442.1	445.3
St Dev Total orig %	2.8	3.4	3.9	4.9	2.3	4.7	0.3
Avg Half Difference	110.4	92.5	82.8	119.6	167.1	105.7	106.3
St Dev Half Difference	18.4	4.4	9.2	3.9	4.1	14	11.9

APPENDIX A

APPENDIX A Hot-Mix Plant Tests, July 99, Plant n, Rarely a Segregation Problem

Sample	n - 1	n - 2	n - 3	n - 4		n - 1	n - 2	n - 3	n - 4		n - 1	n - 2	n - 3	n - 4
Free Fall, in.	32	32	32	32										
Slope	0.9	0.9	0.9	0.9										
Ht on plane,in	8	8	8	8										
2nd fall, in.	15	15	15	15										
A C, %	5.48	5.54	5.73	5.63										
Avg. AC, %	5.60 %	St Dev 0.09 %												
Original Gradation						Far Gradation					Near Gradation			
Sieve, mm	%	%	%	%		%	%	%	%		%	%	%	%
19	100	100	100	100		100	100	100	100		100	100	100	100
12.5	94.8	94.6	94.9	95.4		93.5	91.7	92.8	93.3		97.3	97.6	97.5	98.3
9.5	74.4	76.5	75.9	76.9		68.8	65.0	68.2	67.3		84.7	88.3	85.5	90.1
4.75	56.9	58.6	58.4	58.7		49.5	42.3	46.7	45.2		70.8	75.3	72.9	76.9
2.36	45.3	46.0	46.3	46.3		39.1	31.9	35.7	34.7		56.8	60.4	59.5	62.0
1.18	36.5	36.9	37.2	37.2		32.1	26.7	29.6	28.9		44.6	47.3	46.7	48.6
0.6	25.8	26.0	26.1	26.3		23.3	20.3	21.9	21.6		30.4	31.9	31.4	32.6
0.3	13.7	13.8	13.8	13.9		12.7	11.6	12.1	12.0		15.6	16.0	15.9	16.4
0.15	6.5	6.7	6.6	6.8		6.2	5.9	6.0	6.0		7.2	7.4	7.4	8.0
0.075	3.0	3.0	3.3	3.1		2.9	2.7	2.8	2.8		3.3	3.3	3.8	3.4
Total, %	456.9	462.1	462.5	464.6		428.0	398.2	415.8	411.6		510.8	527.6	520.5	536.2
Average Total, %				461.5					413.4					523.8
Standard Deviation of Total				2.8					10.7					9.3
Difference of summation of percents passing Near and Far											82.8	129.4	104.6	124.7
Average Difference of summation of percents passing Near and Far														110.4
Standard Deviation														18.4

APPENDIX A (con't) Hot-Mix Plant Tests, July 99, Plant o, Frequent Mix Segregation Problems

Sample	o - 1	o - 2	o - 3	o - 4		o - 1	o - 2	o - 3	o - 4		o - 1	o - 2	o - 3	o - 4
Free Fall, in.	32	32	32	32										
Slope	0.9	0.9	0.9	0.9										
Ht on plane, in.	8	8	8	8										
2nd fall, in.	15	15	15	15										
A C, %	5.29	5.45	5.45	5.57										
Avg. AC, %	5.44		St Dev	0.10										
	Original Gradation					Far Gradation					Near Gradation			
Sieve, mm.	%	%	%	%		%	%	%	%		%	%	%	%
19	100	100	100	100		100	100	100	100		100	100	100	100
12.5	96.4	96.5	97.2	97.2		95.2	95.2	95.8	96.8		98.0	98.4	98.8	97.7
9.5	72.3	72.4	74.7	74.1		63.4	65.2	65.4	66.6		83.8	83.0	85.4	84.0
4.75	54.4	54.1	55.4	55.5		44.0	44.5	43.5	46.0		67.8	68.1	69.3	68.2
2.36	42.4	42.5	43.6	43.6		34.2	34.6	33.8	35.2		53.0	54.1	54.9	54.6
1.18	34.5	34.2	35.0	35.2		28.5	28.6	28.2	29.2		42.2	42.3	42.9	43.1
0.6	25.5	25.4	25.9	26.2		22.0	22.1	21.8	22.5		30.0	30.3	30.5	30.9
0.3	13.4	14.2	13.8	14.3		12.1	12.7	12.4	13.0		15.2	16.5	15.5	16.2
0.15	5.4	6.6	5.6	6.1		4.9	5.6	4.9	5.9		6.0	8.2	6.5	6.3
0.075	2.2	2.5	2.3	2.5		2.1	2.2	2.1	2.3		2.3	3.0	2.6	2.9
Total, %	446.4	448.5	453.5	454.6		406.4	410.7	407.8	417.5		498.1	504.0	506.4	503.8
Average Total, %				450.8					410.6					503.1
Standard Deviation Total				3.4					4.3					3.0

Difference of summation of percents passing Near and Far	91.7	93.3	98.6	86.4
Average Difference of summation of percents passing Near and Far				92.5
Standard Deviation				4.4

Appendix A (con't) Hot-Mix Plant Tests, July 99 Plant p, Rarely a Segrgation Problem

Sample	p - 1	p - 2	p - 3	p - 4		p - 1	p - 2	p - 3	p - 4		p - 1	p - 2	p - 3	p - 4
Free Fall, in.	32	32	32	32										
Slope	0.9	0.9	0.9	0.9										
Ht on plane, in.	8	8	8	8										
2nd fall, in.	15	15	15	15										
A C	5.58	5.34	5.35	5.34										
Avg AC,%	5.40		St Dev	0.10										
	Original Gradation					Far Gradation					Near Gradation			
Sieve, mm	%	%	%	%		%	%	%	%		%	%	%	%
19	99.6	100	99.7	99.8		100	100	99.6	99.6		98.9	100	100	100
12.5	98.9	99.4	99.2	98.9		99.3	99.4	98.7	98.5		98.1	99.4	100	100
9.5	75.7	75.9	74.4	74.3		70.0	70.8	69.7	69.5		86.2	86.4	83.7	83.9
4.75	52.4	51.5	50.5	50.4		44.5	44.4	43.7	43.4		66.7	65.9	64.1	64.5
2.36	43.8	42.6	42.0	41.7		36.8	36.4	36.0	35.7		56.4	55.3	54.0	53.9
1.18	37.1	36.0	35.7	35.3		31.6	31.2	30.9	30.6		47.0	45.7	45.2	44.8
0.6	28.1	27.3	27.2	26.9		24.5	24.3	24.2	23.8		34.6	33.5	33.4	33.1
0.3	14.9	14.8	14.9	14.7		13.1	13.3	13.5	13.3		18.0	17.8	17.7	17.7
0.15	7.0	7.3	7.4	7.4		6.1	6.5	6.7	6.8		8.6	8.9	8.7	8.8
0.075	2.9	3.2	3.5	3.5		2.4	2.7	3.2	3.1		3.8	4.2	4.1	4.3
Total, %	460.3	458.0	454.3	452.8		428.3	428.9	426.0	424.3		518.2	517.1	510.8	510.6
Average Total, %				456.3					426.9					514.2
Standard Deviation Total				3.0					1.8					3.5

Difference of summation of percents passing Near to Far	89.9	88.2	84.8	86.3
Average Difference of summation of percents passing Near and Far				87.3
Standard Deviation				1.9

APPENDIX A (con't) Hot-Mix Plant Tests, July 99, Plant q, Frequent Mix Segregation Problems

Sample	q - 1	q - 2	q - 3			q - 1	q - 2	q - 3			q - 1	q - 2	q - 3	
Free Fall, in	32	32	32											
Slope	0.9	0.9	0.9											
Ht on plane, in	8	8	8											
2nd fall, in	15	15	15											
A C, %	5.26	5.17	5.3											
Avg. AC, %	5.24	St Dev 0.05 %												
	Original Gradation					Far Gradation					Near Gradation			
Sieve, mm.	%	%	%			%	%	%			%	%	%	
19	100	100	100			100	100	100			100	100	100	
12.5	97.6	96.8	96.9			96.2	94.5	94.7			98.9	99.2	99.1	
9.5	77.7	75.8	78.6			66.7	64.9	68.0			88.3	87.6	89.2	
4.75	55.3	53.2	57.1			39.7	38.2	42.0			70.5	69.6	72.3	
2.36	42.9	41.3	44.4			29.9	28.6	31.4			55.6	55.1	57.6	
1.18	34.0	32.8	34.9			24.6	23.6	25.5			43.1	42.7	44.4	
0.6	25.3	24.8	25.8			19.5	19.0	20.0			30.9	31.0	31.7	
0.3	14.3	14.7	14.2			12.1	12.0	12.3			16.3	17.5	16.1	
0.15	5.3	5.5	5.0			4.9	4.4	4.4			5.8	6.8	5.6	
0.075	2.2	2.3	2.1			2.0	1.9	1.9			2.3	2.7	2.2	
Total, %	454.5	447.0	459.0			395.7	387.2	400.2			511.6	512.1	518.2	
Average Total, %			453.5					394.3					514.0	
Standard Deviation Total, %			4.9					5.4					3.0	
Difference of summation of percents passing Near to Far											116.0	125.0	118.0	
Average Difference of summation of percents passing Near and Far													119.6	
Standard Deviation													3.0	

APPENDIX B

Appendix B Hot-Mix Plant Tests, November 98, Plant n of Appendix A

Sample	r - 1	r - 2	r - 3	r - 4		r - 1	r - 2	r - 3	r - 4		r - 1	r - 2	r - 3	r - 4
Free Fall, In.	32	32	32	32										
Slope	0.9	0.9	0.9	0.9										
Ht on plane, in.	7	7	7	7										
2nd fall, in.	15	15	15	15										
A C, %	5.78	5.75	5.65	6.41										
Avg AC, %	5.90	St Dev	0.30											
Original Gradation						Far Gradations					Near Gradation			
Sieve, mm.	%	%	%	%		%	%	%	%		%	%	%	%
19	100	100	100	100		100	100	100	100		100	100	100	100
12.5	95.6	94.9	94.6	96.5		92.3	90.8	90.4	94.5		98.5	97.9	97.7	98.5
9.5	74.6	73.4	73.2	74.1		56.4	54.0	53.9	57.2		90.0	87.4	87.4	90.3
4.75	59.7	59.0	58.0	58.6		36.4	35.3	34.2	37.5		79.9	76.3	75.5	78.8
2.36	46.8	46.2	45.8	45.7		26.9	26.4	25.4	27.5		64.1	60.6	60.7	63.3
1.18	37.9	37.4	37.2	37.1		23.1	22.6	22.0	23.4		50.8	48.1	48.3	50.2
0.6	25.6	25.2	25.3	25.3		17.6	17.2	16.9	17.7		32.7	31.1	31.5	32.5
0.3	13.2	12.6	13.1	13.0		9.9	9.8	9.8	10.0		16.0	14.5	15.6	16.0
0.15	6.3	5.9	6.5	6.4		4.9	5.0	5.0	4.9		7.6	6.5	7.6	7.7
0.075	2.9	2.4	2.9	2.9		2.3	2.2	2.2	2.1		3.4	2.5	3.4	3.5
Total	462.3	456.9	456.6	459.4		369.8	363.3	359.9	374.8		543.0	524.9	527.6	540.8
Average Total, %				458.8					366.9					534.1
Standard Deviation Total				2.3					5.8					7.9
Difference of summation of percents passing Near to Far											173.2	161.6	167.8	166.0
Average Difference of summation of percents passing Near and Far														167.1
Standard Deviation														4.1

APPENDIX C

Appendix C RAP Plant Tests, July 99, Plant s

Sample	s - 1	s - 2	s - 3	s - 4		r - 1	r - 2	r - 3	r - 4		r - 1	r - 2	r - 3	r - 4
Free Fall, In.	32	32	32	32										
Slope	0.9	0.9	0.9	0.9										
Ht on plane, in.	8	8	8	8										
2nd fall, in.	15	15	15	15										
A C	5.08	4.99	5.09	4.99										
Avg. AC, %	5.04%	St Dev	0.05%											
	Original Gradation					Far Gradiations					Near Gradation			
Sieve, mm.	%	%	%	%		%	%	%	%		%	%	%	%
19	100	100	100	100		100	100	100	100		100	100	100	100
12.5	97.4	97.5	98.5	97.4		96.2	96.3	98.1	96.6		98.9	99.3	99.0	98.7
9.5	75.1	74.2	76.2	73.5		65.5	65.4	66.6	67.2		87.2	87.6	86.5	83.5
4.75	54.9	52.9	55.7	53.3		41.0	40.2	41.5	44.6		72.6	72.4	71.0	67.1
2.36	40.8	39.2	41.6	39.6		29.5	29.1	30.0	32.7		55.1	54.7	54.1	50.5
1.18	29.2	28.2	29.8	28.5		22.2	22.0	22.6	24.2		38.1	37.7	37.6	35.3
0.6	21.6	20.9	22.0	21.2		17.4	17.1	17.7	18.6		26.9	26.7	26.6	25.4
0.3	14.7	14.2	14.8	14.4		12.2	11.9	12.3	12.9		17.8	17.8	17.5	16.9
0.15	7.7	7.8	7.4	7.1		6.4	6.6	6.7	6.6		9.4	9.5	8.1	8.0
0.075	2.8	2.8	2.8	2.7		2.5	2.5	2.4	2.3		3.2	3.3	3.1	3.2
Totalm %	444.2	437.6	448.8	437.6		392.9	391.2	397.6	405.6		509.1	509.0	503.6	488.5
Average Total				442.1					396.8					502.6
Standard Deviation Total				4.7					5.6					8.4
Difference of summation of percents passing Near to Far											116.2	117.8	106.0	82.9
Average Difference of summation of percents passing Near and Far														105.7
Standard Deviation														13.9

Appendix C (con't) RAP Plant Tests, July 99, Plant s

Sample	t - 1	t - 2	t - 3			t - 1	t - 2	t - 3	t - 4		t - 1	t - 2	t - 3	t - 4
Free Fall, In.	32	32	32											
Slope	0.9	0.9	0.9											
Ht on plane, in.	8	8	8											
2nd fall, in.	15	15	15											
A C, %	4.81	4.81	4.85											
Avg. AC, %	4.82%	St Dev	0.02%											
	Original Gradation					Far Gradations					Near Gradation			
Sieve, mm.	%	%	%	%		%	%	%	%		%	%	%	%
19	100	100	100			100	100	100			100	100	100	
12.5	94.9	94.5	94.3			94.2	92.8	92.7			96.2	97.3	97.0	
9.5	72.2	72.3	72.0			66.1	64.1	63.7			83.2	65.8	85.2	
4.75	53.3	53.5	54.0			45.4	43.2	43.1			67.5	70.7	71.3	
2.36	41.4	41.7	42.0			34.7	32.9	32.7			53.5	56.1	56.9	
1.18	33.6	33.7	33.9			28.7	27.3	27.0			42.4	44.4	44.9	
0.6	25.5	25.6	25.6			22.4	21.5	21.3			31.0	32.2	32.5	
0.3	14.9	14.7	14.7			13.4	12.8	12.6			17.6	17.7	18.1	
0.15	6.4	6.1	6.3			5.8	5.3	5.4			7.5	7.5	7.8	
0.075	3.1	3.1	3.1			2.8	2.7	2.6			3.8	3.6	3.7	
Total	445.2	445.1	445.7			413.2	402.5	401.0			502.8	515.4	517.4	
Average Total, %				445.3					405.6					511.9
Standard Deviation Total				0.3					5.4					6.5

Difference of summation of percents passing Near to Far	89.6	112.9	116.4	
Average Difference of summation of percents passing Near and Far				106.3
Standard Deviation				11.9