SEP 30 1997
Sta 37 22

# ENGINEERING DATA TRANSMITTAL

Page 1 of 1

1. EDT 606756

| | | |
|---|---|---|
| 2. To: (Receiving Organization) DISTRIBUTION | 3. From: (Originating Organization) SGN Eurisys Service Corp | 4. Related EDT No.: n/a |
| 5. Proj./Prog./Dept./Div.: Characterization | 6. Design Authority/ Design Agent/Cog. Engr.: K.A. White/B.L. Philipp/M.F. Erhart | 7. Purchase Order No.: |
| 8. Originator Remarks: For approval / Release | | 9. Equip./Component No.: n/a |
| | | 10. System/Bldg./Facility: 200G |
| 11. Receiver Remarks: 11A. Design Baseline Document? [X] Yes [] No | | 12. Major Assm. Dwg. No.: n/a |
| | | 13. Permit/Permit Application No.: n/a |
| | | 14. Required Response Date: |

15. DATA TRANSMITTED

| (A) Item No. | (B) Document/Drawing No. | (C) Sheet No. | (D) Rev. No. | (E) Title or Description of Data Transmitted | (F) Approval Designator | (G) Reason for Transmittal | (H) Originator Disposition | (I) Receiver Disposition |
|---|---|---|---|---|---|---|---|---|
| 1 | HNF-SD-WM-DA-238 | KJ | 0 | SHMS-E+ Portable Platform Design Analyses | SQ | 1 | 1 | 1 |
| | | | | | | | | |
| | | | | | | | | |
| | | | | | | | | |

16. KEY

| Approval Designator (F) | Reason for Transmittal (G) | | Disposition (H) & (I) | |
|---|---|---|---|---|
| E, S, Q, D or N/A (see WHC-CM-3-5, Sec.12.7) | 1. Approval<br>2. Release<br>3. Information | 4. Review<br>5. Post-Review<br>6. Dist. (Receipt Acknow. Required) | 1. Approved<br>2. Approved w/comment<br>3. Disapproved w/comment | 4. Reviewed no/comment<br>5. Reviewed w/comment<br>6. Receipt acknowledged |

17. SIGNATURE/DISTRIBUTION
(See Approval Designator for required signatures)

| (G) Reason | (H) Disp. | (J) Name (K) Signature (L) Date (M) MSIN | (G) Reason | (H) Disp. | (J) Name (K) Signature (L) Date (M) MSIN |
|---|---|---|---|---|---|
| 1 | 1 | Design Authority K.A. White S5-13 9/17/97 | 1 | 1 | T.S. Hundal B4-51 9/17/97 |
| 1 | 1 | Design Agent B.L. Philipp L6-37 9/17/97 | 3 | 6 | T.C. Schneider L6-37 9/18/97 |
| 1 | 1 | Cog.Eng. M.F. Erhart R1-56 9/25/97 | | | |
| 1 | 1 | Cog. Mgr. R.L. Schlosser R1-56 9/25/97 | | | |
| 1 | 1 | QA J.J. Verderber S5-15 9/29/97 S5-15 | | | |
| 1 | 1 | Safety S.U. Zaman S6-02 9/17/97 | | | |
| | | Env. | | | |

| 18. | 19. | 20. | 21. DOE APPROVAL (if required) |
|---|---|---|---|
| Signature of EDT Originator — Date 9/17/97 | Authorized Representative for Receiving Organization — Date 29 Sep 97 | Design Authority/ Cognizant Manager — Date 9/25/97 | Ctrl. No.<br>[] Approved<br>[] Approved w/comments<br>[] Disapproved w/comments |

BD-7400-172-2 (05/96) GEF097

BD-7400-172-1 (07/91)

# SHMS-E+ PORTABLE PLATFORM DESIGN ANALYSES

T. S. Hundal
SGN Eurisys Services Corporation, Richland, WA 99352
U.S. Department of Energy Contract DE-AC06-96RL13200

EDT/ECN: No. 606756 UC: 2030
Org Code: S1200 Charge Code: N2064
B&R Code: EW3120072 Total Pages: 17

Key Words: Standard Hydrogen Monitoring System (SHMS) Portable Platform

Abstract:

Standard-E analytical system design analyses for the Portable Platform.

TRADEMARK DISCLAIMER. Reference herein to any specific commercial product, process, or service by trade name, trademark, manufacturer, or otherwise, does not necessarily constitute or imply its endorsement, recommendation, or favoring by the United States Government or any agency thereof or its contractors or subcontractors.

Printed in the United States of America. To obtain copies of this document, contact: WHC/BCS Document Control Services, P.O. Box 1970, Mailstop H6-08, Richland WA 99352, Phone (509) 372-2420; Fax (509) 376-4989.

SEP 30 1997
DATE:
STA: 37
HANFORD RELEASE
ID: 22

Christine Willingham 9-30-97
Release Approval Date

Release Stamp

**Approved for Public Release**

# SHMS-E+ PORTABLE PLATFORM

# DESIGN ANALYSES

August 1997

T. S. Hundal

SGN Eurisys Services Corporation

ANALYTICAL CALCULATIONS

Page 1 of 15

Subject Standard Hydrogen Measuring System (SHMS-E+) Portable Platform Design

Originator T. S. Hundal TSHundal Date 8-27-97

Checker MA Scott MA Scott Date 8-27-97

PROBLEM:

Design the portable Standard Hydrogen Monitoring System(SHMS-E+) Platform with installed Bottle Racks, Pump stand, Transformer, Chiller, and SHMS-E test cabinet. This equipment is mounted on the platform. Both Gas Bottle Racks should be designed to withstand seismic loads with adequate anchorage to the platform and the platform itself should be capable of withstanding the applicable wind and seismic loads. The platform with mounted equipment should have lifting lugs to be transported to different test sites within the tank farms.

DESIGN BASIS:

See References on page 2.

ASSUMPTIONS:

All equipment other than the Gas Bottle Racks, mounted on the platform will not fail or collapse when subjected to seismic and wind forces and due to transportation loads.

CONCLUSIONS AND RECOMMENDATIONS:

Use platform details shown on page 3 and as shown on Drawing H-14-102407, SHMS(E+)Platform Assembly.

ANALYTICAL CALCULATIONS

Page 2 of 15

Subject Standard Hydrogen Measuring System (SHMS-E+) Portable Platform Design

Originator T. S. Hundal Date 8-27-97

Checker M. Scott Date 8-27-97

REFERENCES:


1. Engineering Specifications for Portable Standard Hydrogen Monitoring System(SHMS-E+) Platform.( Draft Dated 6/10/97).

2. GC-LOAD-01, A/E Civil/Structural Standard Design Criteria, Design Loads for Facilities.(SDC 4.1, Rev. 12)

3. American Institute of Steel Construction, AISC Manual (9th Edition).

4. International Conference of Building Officials Uniform Building Code (UBC), 1991.

5. American Society of Civil Engineers (ASCE) 7-88, Minimum Design Loads for Buildings and other Structures.

6. SM International, Metals Handbook (Vol. 1, Tenth Edition).

7. American Welding Society (AWS) D1.1-96, Structural Welding Code-Steel.

8. Quimby & Associates (Q&A # AK9502), Control Skid Structural Calculations

9. DOE-RL-92-36, Hanford Site Hoisting and Rigging Manual, January 15,1993.

10. 101-SY Hydrogen Monitor Gas Bottle Rack, Seismic Analysis, WHC-SD-WM-DA-085, pp 64 thru 78.

11. Seismic/Wind Analysis for Enclosure, WHC-SD-WM-SDD-001, Rev. 0, pp A77 thru A87. (Support Analysis for 101-SY Hydrogen Monitoring System).

12. Drawings: H-14-100837-Sh.1 thru 9, H-2-818214-Sh.1 & 2, H-14-100844-Sh. 1 thru 9, H-14-100845-Sh.1 & 2, H-2-85626, H-14-102047 Sh. 1 & 2.

13. Standard Handbook for Mechanical Engineers, by T. Baumeister and L.S. Marks, Seventh Edition.

## ANALYTICAL CALCULATIONS

Page 3 of 15

Subject SHMS (E+) PORTABLE PLATFORM

Originator T S Hyndal Date 8-27-97

Checker [signature] Date 8-27-97

PRELIM.

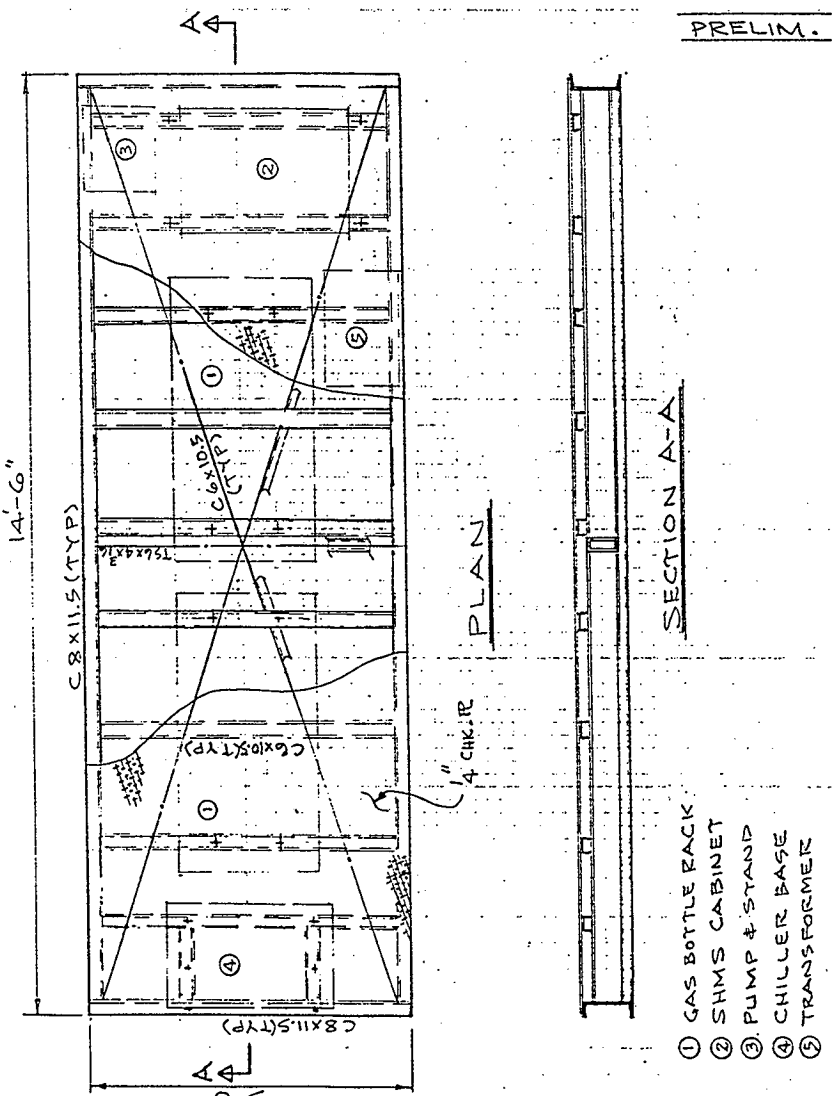

Page 4 of 15

Subject Standard Hydrogen Measuring System (SHMS-E+) Portable Platform Design

Originator T. S. Hundal Date 8-27-97

Checker MA Scott Date 8-27-97

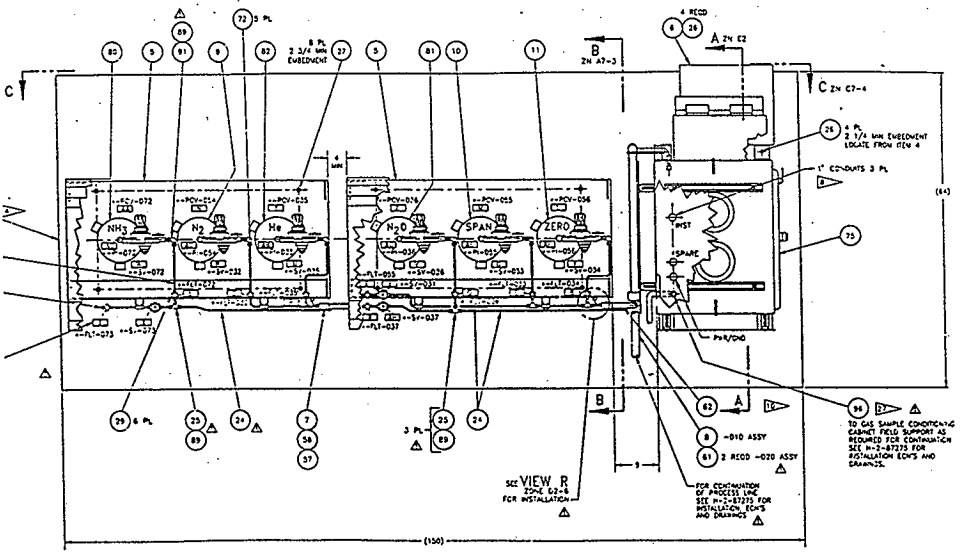


PLAN VIEW

1 ANALYTIC EQPT ARRANGEMENT DUAL PROCESS LINE
SCALE 1/8

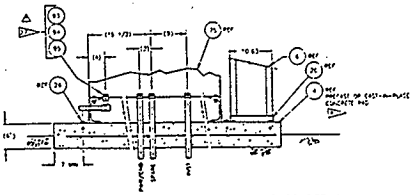

SECTION A-A – SLAB PENETRATION & ANCHOR DETAIL

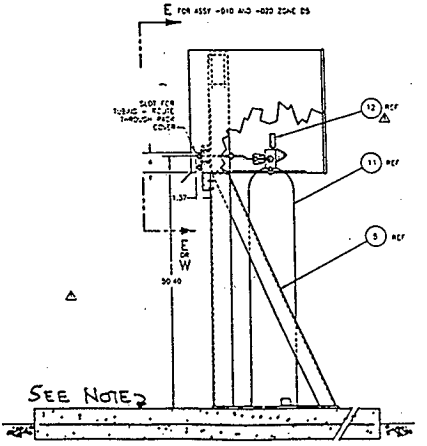


VIEW R

NOTE

CONC. PAD IS FOR REF. ONLY & TAKEN FROM DWG H-14-100844.

Page 5 of 15

Subject Standard Hydrogen Measuring System (SHMS-E+) Portable Platform Design

Originator T. S. Hundal T S Hundal Date 8-27-97

Checker MA Scott MA Scott Date 8-27-97

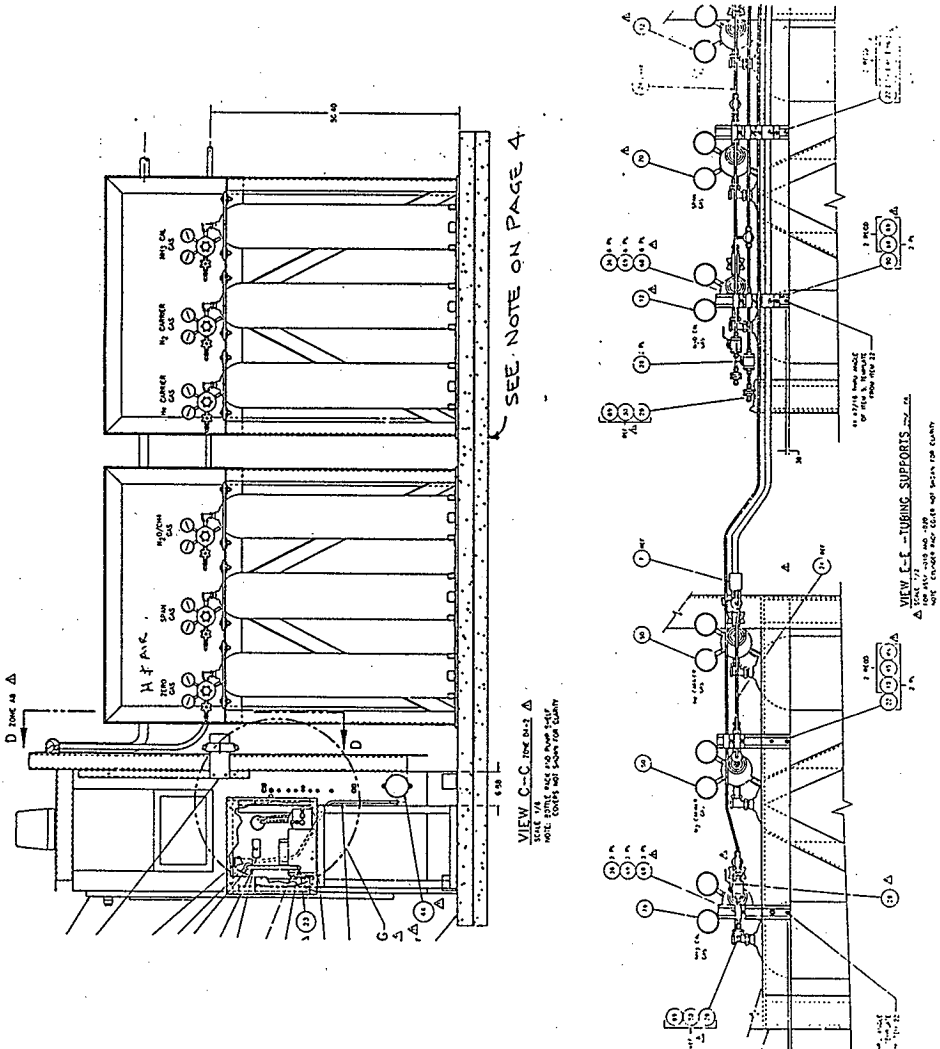

ANALYTICAL CALCULATIONS

Page 6 of 15

Subject Standard Hydrogen Measuring System (SHMS-E+) Portable Platform Design

Originator T. S. Hundal Date 8-27-97

Checker M A Scott Date 8-27-97

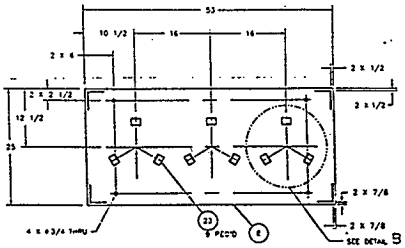


SECTION H-H

NOTE: ITEM NUMBER 6 NOT SHOWN

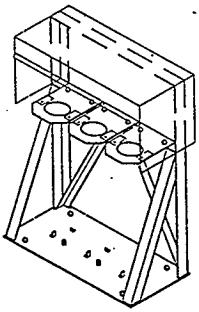

GAS BOTTLE RACK ISOMETRIC

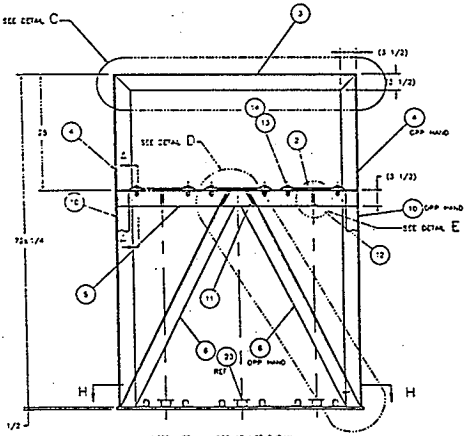


NOTE: ITEM NUMBER 17 NOT SHOWN

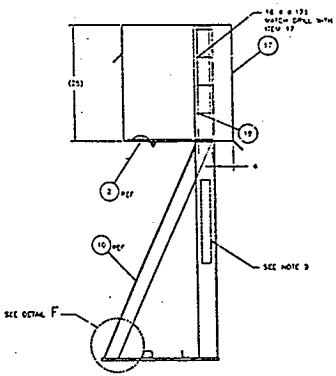


GAS BOTTLE RACK DETAILS

ANALYTICAL CALCULATIONS

Page 7 of 15

Subject Standard Hydrogen Measuring System (SHMS-E+) Portable Platform Design

Originator T. S. Hundal Date 8-27-97

Checker MA Scott Date 8-27-97

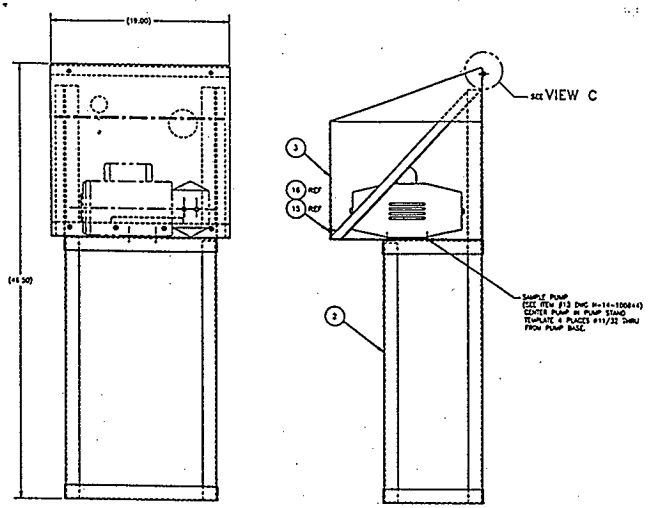


1 SAMPLE PUMP STAND ASSEMBLY
SCALE 1/4

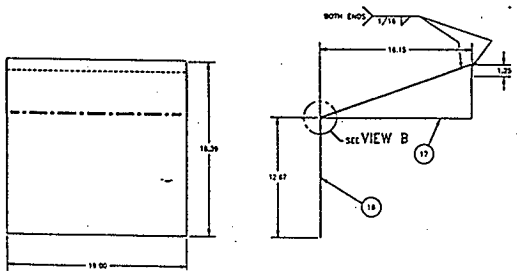

# ANALYTICAL CALCULATIONS

Page 8 of 15

Subject: SHMS (E+) PORTABLE PLATFORM

Originator: [signature] Date: 8-27-97

Checker: MA SCOTT [signature] Date: 8-27-97

TOTAL ASSEMBLED WEIGHT OF THE SYSTEM IS 255 LBS.

DOOR SWING IS 36 INCHES.

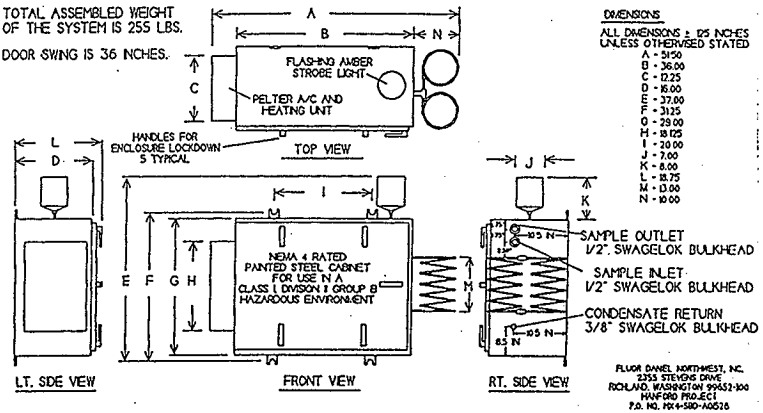


DIMENSIONS

ALL DIMENSIONS ± .125 INCHES UNLESS OTHERWISE STATED

A - 51.50
B - 36.00
C - 12.25
D - 15.00
E - 27.00
F - 31.25
G - 29.00
H - 18.125
I - 20.00
J - 7.00
K - 8.00
L - 15.75
M - 13.00
N - 10.00

FLUOR DANIEL NORTHWEST, INC.
2355 STEVENS DRIVE
RICHLAND, WASHINGTON 99352-100
HANFORD PROJECT
P.O. NO. PO14-580-A0526

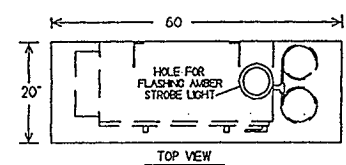


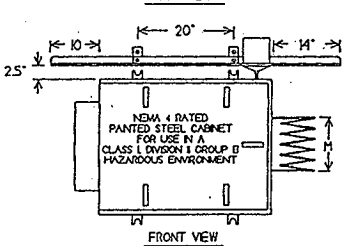


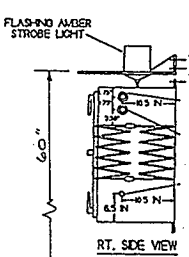


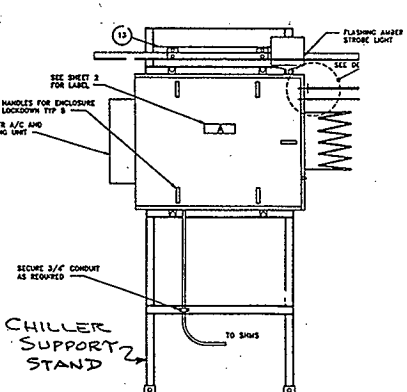


CHILLER INFO.

## ANALYTICAL CALCULATIONS

Page 9 of 15

Subject SHMS (E+) PORTABLE PLATFORM

Originator [signature] Date 8-27-97

Checker MA SCOTT [signature] Date 8-27-97

CHECK C6x10.5 $\ell = 14.5'$, $S = 5.06$, $I = 15.2$

(EXIST. DWG. H-2-85626 SH.2)

TOTAL LOADS ON PLATFORM

DL (ESTIMATE)

| | |
|---|---|
| SHMS CABINET | = 900 # |
| 2 BOTTLE RACKS W/BOTTLES = 2x630 | = 1260 |
| PUMP & STAND | = 100 |
| CHILLER & STAND | = 250 |
| TRANSFORMER (EST) | = 300 |
| PLATFORM 15 psf (EST) | = 1100 |
| MISC. | = 500 |
| TOTAL DL | = 4410 # |

LL

| | |
|---|---|
| 25 psf = 25x14.5x5 | = 1820 # |
| TOTAL DL+LL = 6230# | |

DYNAMIC LOADS

DURING TRANSPORTATION, 50% = 3115 #
(ASSUME)

∴ TOTAL DESIGN LOAD = 9345 # ⇐

∴ LOAD/LONG. CG = $\frac{9345}{2}$ x 1.15* = 5.4 k > 5.2 k ∴ NG

REF. 3 p. 2-87

TRY C8x11.5

*15% FOR ASSUMED ASYMMETRY

ALLOW. LOAD = 8.4 k > 5.4 k ∴ OK

REF 3, p. 2-85

**USE C8x11.5**

## ANALYTICAL CALCULATIONS

Page 10 of 15

Subject SHMS (E+) PORTABLE PLATFORM

Originator [signature] Date 8-27-97

Checker [signature] Date 8-27-97

SEISMIC:

CHECK GAS BOTTLE RACK FOR SEISMIC LOADS

(REF. 10), (REF. 2), (REF. 4)

SHMS SYSTEM IS GENERAL SERVICE (SC-4) (Ref. 1)
BUT IT COULD INTERACT WITH SC-1 SSC.
∴ IT IS A 4/1 SITUATION

USE REF. 2 {USE UBC METHOD WITH SC-1 SEISMIC DEMAND}

i.e. EQUIV. LATERAL FORCE $F_p = ZIC_pW_p$ (REF. 4)
$= .43 \times 1.25 \times 1.5 \times W_p$
$= .81 W_p$

$Z = .43$ (REF. 2, FIG. 3)
$I = 1.25$ (REF. 2)
$C_p = 2 \times .75 = 1.5$ (REF. 4)

USE REF. 10 RESULTS TO MODIFY THE FINAL FORCES & STRESES AS FOLLOWS:

MODIFICATION FACTOR, $M_f = \frac{.81}{.5} = 1.62$

$\angle 4 \times 3\frac{1}{2} \times \frac{3}{8}$

$f_a = 14 \times 1.62 = 23$ psi  $f_{vy} = 7 \times 1.62 = 11$ psi  $f_{vz} = 7 \times 1.62 = 11$ psi
$f_{bx} = 108 \times 1.62 = 175$ psi  $f_{by} = 110 \times 1.62 = 178$ psi  $f_{bz} = 230 \times 1.62 = 373$ psi

$\angle 3\frac{1}{2} \times 3\frac{1}{2} \times \frac{5}{16}$

$f_a = 100 \times 1.62 = 162$ psi  $f_{vy} = 6 \times 1.62 = 10$ psi  $f_{vz} = 31 \times 1.62 = 50$ psi
$f_{bx} = 53 \times 1.62 = 86$ psi  $f_{by} = 107 \times 1.62 = 173$ psi  $f_{bz} = 994 \times 1.62 = 1610$ psi

$\angle 3 \times 3 \times \frac{1}{4}$

$f_a = 46 \times 1.62 = 75$ psi  $f_{vy} = 9 \times 1.62 = 15$ psi  $f_{vz} = 4 \times 1.62 = 7$ psi
$f_{bx} = 154 \times 1.62 = 249$ psi  $f_{by} = 324 \times 1.62 = 525$ psi  $f_{bz} = 304 \times 1.62 = 492$ psi

$\frac{1}{2}$" PL

$\sigma_x = 382 \times 1.62 = 619$ psi  $\sigma_y = 441 \times 1.62 = 714$ psi  $\tau_{xy} = 97 \times 1.62 = 157$ psi
$\sigma_1 = 513 \times 1.62 = 831$ psi  $\sigma_z = 509 \times 1.62 = 825$ psi
VON MISES $= 448 \times 1.62 = 726$ psi

NOTE: BY INSPECTION, STRESSES ARE WELL WITHIN ALLOWABLE LIMITS.
∴ OK

REACTIONS

$F_x = 28.5 \times 1.62 = 46^{\#}$, $F_y = 26.2 \times 1.62 = 42^{\#}$, $F_z = 203.8 \times 1.62 = 330^{\#}$

USE $5/8$" Φ A307 BOLTS

## ANALYTICAL CALCULATIONS

Page 11 of 15

Subject SHMS (E+) PORTABLE PLATFORM

Originator [signature] Date 8-27-97

Checker [signature] Date 8-27-97

### WT. COMPUTATIONS (ACTUAL)

PLATFORM FRAMING

| | | | |
|---|---|---|---|
| 2-C8×11.5 | (14.5+5)11.5×2 | = 449 | |
| 2-C6×10.5 | 15.3×10.5×2 | = 322 | |
| 9-C6×10.5 | 4.625×10.5×9 | = 437 | |
| 1-TS 6×4×3/16 | 4.625×11.97 | = 55 | = 2000# |
| 1-PL 14.5'×5'×1/4" | 14.5×5×10.2 | = 740 | |
| | | = 2003 | |

GAS BOTTLE RACK W/BOTTLES

FRAME

| | | | |
|---|---|---|---|
| PL 53×25×1/2 | $\frac{53\times25}{144}\times20.4$ | = 188 | |
| 2-L 4×3 1/2×3/8 | 2×6'×9.1' | = 109 | |
| 1-L4×3 1/2×3/8 | 53"/12 × 9.1' | = 40 | |
| 4-L3×3×1/4 | 4×4.33'×4.9' | = 85 | |
| 1-3 1/2×3 1/2×5/16 | 53/12 × 7.2' | = 32 | = 670# |
| 3-PS 14"×20"×3/8 | $\frac{3\times14\times20}{144}\times15.3'$ | = 89 | |
| 9-L1 1/2×1 1/2×3/16×2 | $9\times\frac{2}{12}\times1.8$ | = 3 | |

14 GAGE GAL. COVER SHT.

$\left\{[(23+6+3)+(25+3)]53+2\times25\times23\right\}\frac{3.75}{144}$ = 113

BOLTS + MISC = 10

= 667

3 BOTTLES/RACK 3×122* = 366

say 370#

RACK & BOTTLES WT., 670+370 = 1040#

*FULL BOTTLE

BOTTLE WT. = 115# + 7# CONTENTS

## ANALYTICAL CALCULATIONS

Page 12 of 15

Subject SHMS(E+) PORTABLE PLATFORM

Originator [signature] Date 8-27-97

Checker [signature] Date 8-27-97

REVISED LOADS ON PLATFORM (DL)

| | | |
|---|---|---|
| SHMS CABINET | | = 900# |
| 2-BOTTLE RACKS | 2x1040 | = 2080 |
| PUMP & STAND | | = 100 |
| CHILLER & STAND | | = 250 |
| TRANSFORMER | | = 300 |
| PLATFORM | | = 2000 |
| MISC. | | = 100 |
| TOTAL DL | | = 5730 # |
| LL @ 25 psf = 25x14.5x5 | | = 1820 # |
| TOTAL DL+LL | | = 7550 # |

DYNAMIC LOADS

DURING TRANSPORTATION, (ASSUME 50% DL) = 2865 #

∴ DESIGN LOAD = 5730 + 2865 = 8595#

ASSUME LOAD ON TWO LIFT POINTS = $\frac{8595}{2}$ = 4298#

ASSUME 15% ASYMMETRY {REF. 9 SEC. 9.2.1.2}

∴ MAX. LOAD @ A LIFT POINT = 4298 x 1.15

= 4942 # Say 5000#

CHECK ACTUAL ASYMMETRY (SEE p.14)

@ X AXIS

$$Y = \frac{100\times18-(900\times6+300\times20)}{5730} = 1.68'' \text{ SAY } 2''$$

@ Y AXIS

544260

$$X = \frac{2000\times87+250\times10+1040(53.5+110.5)+300\times128+900\times159+100\times163}{5730} = 95''$$

∴ ASYMMETRY = 95 - 87 = 8" ⇒ 9.2% < 15% ASSUMED

## ANALYTICAL CALCULATIONS

Page 13 of 15

Subject SHMS (E+) PORTABLE PLATFORM

Originator [signature] Date 8-27-97

Checker [signature] Date 8-27-97

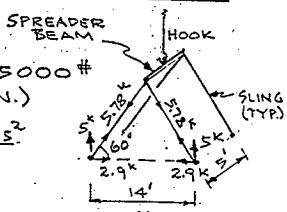


LIFTING LUG CONN. MAX. LOAD @ A LIFT POINT = 5000 #

USE A SPREADER BEAM W/ SLING ANGLE = 60° (MIN.)

$A_w = 2(6+7.25+2) = 30.5 \text{ in}$

$x = \frac{2.5\times7.25-(1\times7.25+2\times2\times2)}{2(7.25+2)} = .16''$

$S_x = 6\times8+2\times7.25+\frac{7.25^2}{3} = 80 \text{ in}^2$

$J_w = \frac{6^3+3\times6\times8^2}{6} + \frac{7.25^3+3\times7.25\times3.5^2}{6} + \frac{2^3+3\times2\times7.25^2}{6} = 389.8 \text{ in}^3$

(228; 107.92; 53.9)

$f_x = \frac{2.9}{30.5} + \frac{2.9\times6(4)}{389.8} = .27^k/\text{in}$, $^*f_z = \frac{2.9}{30.5} + \frac{2.9\times6}{80} = .31^k/\text{in}$

$f_y = \frac{5}{30.5} + \frac{5\times.16\times3.16}{389.8} = .17^k/\text{in}$

*ASSUME NO SPREADER BEAM

$f_r = \sqrt{(.27)^2+(.17)^2+(.31)^2} = .64^k/\text{in} < 3.6^k/\text{in}$

∴ ok

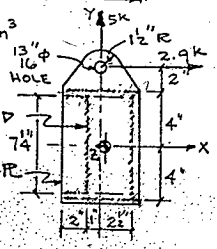


USE ¾"φ SHACKLES W/ 3 TON MIN. CAPACITY

¼" WELD CAPACITY

$14.4\times.25 = 3.6^k/\text{in}$

CHECK R

ALLOW. BEARING LOAD $= .9F_y A_p$ REF. 3, J8, p.5-79

$= .9\times36\times(.75\times.75)$

$= 18.2^k > 5.78^k$ ∴ ok

$f_b = \frac{2.9\times2}{6\times(.75)^2/6} = 10.3^{ksi} < 24^{ksi}$ ∴ ok

CROSS BEAM (C 6x10.5)

$l = 5'$ ALLOW. UDL = $15^k$ ∴ ok by INSPECTION

CHECK OVERTURNING DUE TO SEISMIC LOADS

LATERAL SEISMIC LOAD = .81g

FOR FLEXIBLE EQUIP. ON GROUND

$= .81\times5730$

$= 4641$ #

$C.G. = \frac{2000\times6.3+2(670\times36+370\times28)+900\times48+100\times56+250(28+16)+300\times14+100\times38}{5730}$ (4960; 14930)

$= 26.07''$

$F.O.S. = \frac{.85\times5730\times28''}{4641\times26.07} = 1.12 > 1.0$ ∴ ok REF. 4, SECT. 2337(a)

SLIDING: SINCE NO CREDIT CAN BE TAKEN FOR FRICTION FOR SEISMIC LOADING, SET THIS SKID AT LEAST 12" FROM ANY NEARBY

## ANALYTICAL CALCULATIONS

Page 14 of 15

Subject SHMS (E+) PORTABLE PLATFORM

Originator [signature] Date 8-27-97

Checker [signature] Date 8-27-97

CHECK PLATFORM AGAINST WIND SAFETY

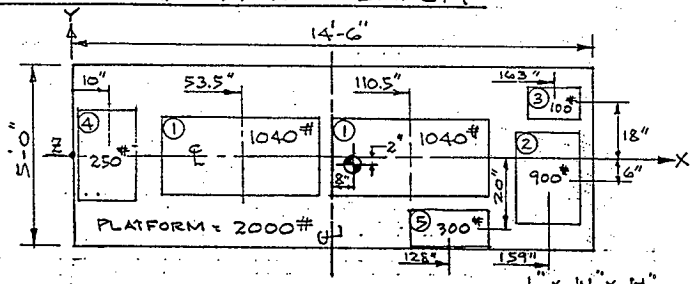


L" x W" x H"

① - GAS BOTTLE RACK 53 x 25 x 72

② - SHMS CABINET 32 x 24 x 96 (72+6+18)

③ - PUMP ENCL. 19 x 16 x 47

④ - CHILLER 52 x 19 x 60

⑤ - TRANSFORMER 20 x 16 x 27

WIND SPEED

V = 80 mph

IMPORTANCE FACTOR I = 1.0

EXPOSURE CLASS = C

USE REF. 5 (ASCE 7-88)

DESIGN WIND FORCE, $F = q_z G_h C_f A_f$ (TABLE 4)

where: $q_z = .00256 K_z (IV)^2$

$= .00256(.8)(1 \times 80)^2$

$= 13.1$ psf

$G_h = 1.32$ (TABLE 8)

$C_f = 1.4$ (TABLE 12)

$A_f$ = PROJECTED AREA

WIND LOAD IN Y-DIRECTION

$A_{f_1} = \left[\frac{53 \times 72}{144} \times .75^*\right] 2 = 40$ SF @ 47", (72"-25") SEE p. 6

$A_{f_2} = \frac{24 \times 96}{144} = 16$ SF @ 48"

$A_{f_3} = \frac{19 \times 47}{144} \times .5^* = 3$ SF @ 38", (47"-9") SEE p. 7

$A_{f_4} = \frac{19 \times 60 \times .5^*}{144} = 4$ SF @ 44", $\left\{60 - \left(\frac{29+3}{2}\right)\right\}$ SEE p. 8

$A_{f_5} = \frac{20 \times 27}{144} = 4$ SF @ 14"

* APPROX. SURFACE AREA

## ANALYTICAL CALCULATIONS

Page 15 of 15

Subject SHMS (E+) PORTABLE PLATFORM

Originator [signature] Date 8-27-97

Checker [signature] Date 8-27-97

$F = 13.1 \times 1.32 \times 1.4 \times 67 = 1622\#$

C.G. of PROJECTED AREAS

$$z = \frac{2(20\times47)+16\times48+3\times38+4\times44+4\times14}{20+20+16+3+4+4} = \frac{3014}{67} = 45''$$

CHECK OVERTURNING

ASSUME C.G. OF PLATFORM WITH EQUIP. MOUNTED IS 6" OFF ℄. (NOTE: 2" ACTUAL, SEE P.12 & 14)

$$F.O.S. = \frac{5730\times24}{1622\times53} = 1.60 > 1.0 \therefore ok$$

(REF. 4 SECT. 2317)

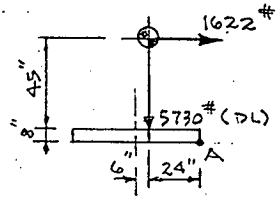


CHECK SLIDING

CO-EFFICIENT OF FRICTION, $\mu = 0.4$ (.3 to .7) IRON ON STONE REF. 13 P.3-38

SLIDING FORCE, $S_f = 1622\#$

RESISTING FORCE, $R_f = .4 \times 5730 = 2292\#$

$$F.O.S = \frac{2292}{1622} = 1.41 > 1.0 \therefore ok$$

# DISTRIBUTION SHEET

| To | From | Page 1 of 1 |
|---|---|---|
| DISTRIBUTION | B.L. Philipp SESC | Date 8/29/97 |
| Project Title/Work Order | | EDT No. 606756 |
| SHMS-E+ Portable Platform Design Analyses | | ECN No. |

| Name | MSIN | Text With All Attach | Text Only | Attach. / Appendix Only | EDT/ECN Only |
|---|---|---|---|---|---|
| T.S. Hundal | B4-51 | X | | | |
| K.A. White | S5-13 | X | | | |
| M.F. Erhart | R1-51 | X | | | |
| R.L. Schlosser | R1-56 | | | | X |
| J.J. Verderber | S5-15 | X | | | |
| S.U. Zaman | S5-12 | X | | | |
| T.C. Schneider | L6-37 | X | | | |
| D.D. Tate | L6-37 | X | | | |
| B.L. Philipp (3) | L6-37 | X | | | |