PB2000-104240

GUIDELINES FOR THE USE OF **PORTABLE TRAFFIC SIGNALS** IN RURAL TWO-LANE MAINTENANCE OPERATIONS

by

Ginger Daniels, P.E.
Texas Transportation Institute

Steve Venglar, P.E.
Texas Transportation Institute

And

Dale Picha, P.E.
Texas Transportation Institute

Report 3926-2
Project Number 7-3926

Sponsored by
TEXAS DEPARTMENT OF TRANSPORTATION
In Cooperation with the
U.S. Department of Transportation
Federal Highway Administration

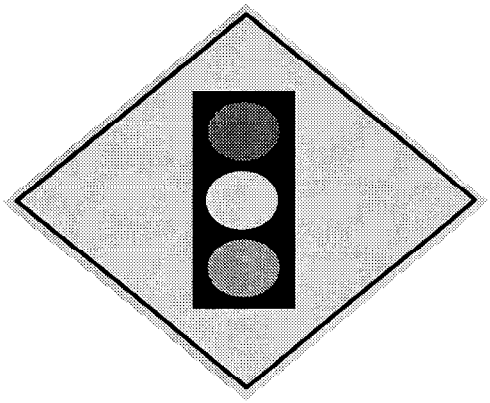

Traffic Operations Division
January 2000

REPRODUCED BY: NTIS
U.S. Department of Commerce
National Technical Information Service
Springfield, Virginia 22161

Technical Report Documentation Page

1. Report No.	2. Government Accession No.	3. Recipient's Catalog No.
TX-00/3926-2		

4. Title and Subtitle	5. Report Date
GUIDELINES FOR THE USE OF PORTABLE TRAFFIC SIGNALS IN RURAL TWO-LANE MAINTENANCE OPERATIONS	February 2000
	6. Performing Organization Code
7. Author(s) Ginger Daniels, Steven Venglar, and Dale Picha	8. Performing Organization Report No. Report 3926-2
9. Performing Organization Name and Address Texas Transportation Institute The Texas A&M University System College Station, Texas 77843-3135	10. Work Unit No. (TRAIS)
	11. Contract or Grant No. Project No. 7-3926
12. Sponsoring Agency Name and Address Texas Department of Transportation Research and Technology Transfer Office P. O. Box 5080 Austin Texas 78763-5080	13. Type of Report and Period Covered Field Guide: September 1996-February 1999
	14. Sponsoring Agency Code

15. Supplementary Notes

Research performed in cooperation with the Texas Department of Transportation.
Research Project Title: Study and Evaluate the Use of Temporary Traffic Signals to Replace Flaggers for Maintenance Operations

16. Abstract

The purpose of this report is to provide guidelines for the application of portable traffic signals in short-term, routine maintenance projects on rural two-lane highways in Texas. This guidebook serves as a supplement to the equipment operator's manual. Using the findings of the research project as its basis, the document provides guidelines on the types of maintenance projects best suited for portable traffic signals, procedures for setting up work zones, and the steps for determining signal timings for setting the controllers. This implementation guide is intended to be a useful tool for field personnel in the application of this technology.

17. Key Words	18. Distribution Statement
Portable Traffic Signal, Work Zone Safety, Work Zone Traffic Control Devices, Maintenance Work Zone, Flagger, Flagging Operation	No restrictions. This document is available to the public through NTIS: National Technical Information Service 5285 Port Royal Road Springfield, Virginia 22161

19. Security Classif.(of this report)	20. Security Classif.(of this page)	21. No. of Pages	22. Price
Unclassified	Unclassified	36	

Form DOT F 1700.7 (8-72) Reproduction of completed page authorized

DISCLAIMER

The contents of this report reflect the views of the authors, who are responsible for the facts and the accuracy of the data presented herein. The contents do not necessarily reflect the official views or policies of the Texas Department of Transportation (TxDOT). This report does not constitute a standard, specification, or regulation. Not intended for construction, bidding, or permit purposes. The engineer in charge of the project was Ginger Daniels, Texas P.E. #64560.

This document contains information about the programming of portable traffic signal control devices in rural, two-lane maintenance work zones. The Texas Manual on Uniform Traffic Control Devices (TMUTCD) specifies that such portable signals are subject to the same standards as permanent signal installations. This field guide should not be widely distributed until TxDOT resolves conflicting language in the TMUTCD between the requirement for engineering studies for signal installation/operation and the practical daily application of portable traffic signals in maintenance work zones. Otherwise, the proposed field setup and signal timings entered into the portable signal controllers must be appropriately determined by an engineering study (i.e., they must be approved by an engineer). Revisions to the TMUTCD will be necessary before the guidelines within this document can be fully implemented.

PROTECTED UNDER INTERNATIONAL COPYRIGHT
ALL RIGHTS RESERVED
NATIONAL TECHNICAL INFORMATION SERVICE
U.S. DEPARTMENT OF COMMERCE

Reproduced from
best available copy.

ACKNOWLEDGMENTS

The authors would like to thank the sponsor's project director, Greg Brinkmeyer from the Traffic Operations Division of the Texas Department of Transportation (TxDOT) for his leadership and guidance. The authors are grateful to the following individuals from the Kerrville Area Office and Bandera Maintenance Section of the San Antonio TxDOT District for their time, initiative, and valuable input provided to the project:

Bill Tucker, Kerrville Area Engineer
Bruce Eliker, Bandera Maintenance Section
Juan Fernandez, Bandera Maintenance Section
Todd Sandidge, Bandera Maintenance Section
Paul Williams, Bandera Maintenance Section
Cecil (Bubba) Loman, Bandera Maintenance Section
Roger Schultz, Bandera Maintenance Section

The authors also would like to thank the TxDOT personnel in the Dallas, Wichita Falls, Abilene, and Amarillo Districts, who provided their insight and experience regarding construction applications, and Glenn Garrison of International Traffic Systems-Texas, Inc. for his assistance in providing product information.

How to use this guidebook.....

The purpose of this document is to provide guidelines for the application of portable traffic signals in short-term maintenance projects on rural two-lane highways.

This guidebook serves as a supplement to the operator's manual for your specific equipment and is not a replacement for the detailed equipment operating information supplied by the manufacturer.

You will find guidelines in this document on:

- **the types of maintenance projects best suited for portable traffic signals,**
- **how to set up work zones using portable traffic signals,**
- **the different modes of signal operation, and**
- **how to determine signal timings for setting the controllers.**

This guidebook was developed in conjunction with Research Project 7-3926, "Study and Evaluate the Use of Temporary Traffic Signals to Replace Flaggers for Maintenance Operations." More detailed information and the basis for the guidelines presented in this document can be found in Research Report 3926-1 (*1*).

TABLE OF CONTENTS

List of Figures x

List of Tables xi

Section 1 - Applicability of Portable Signals in Two-Lane Rural Work Zones 1

Overview 1
Benefits of Using Portable Signals in Place of Flaggers 2
Types of Maintenance Projects 2
Guidelines for General Use in Routine Maintenance 3

Section 2 - Setting Up the Work Zone 5

Field Inventory 5
Basic Guidelines for Work Zone Traffic Control Devices 6
Night Closures 6
Site Specific Considerations 8
Determining Length of the Work Zone 8
Designing for Sight Distance 8
Handling Intersecting Streets and Driveways 10
Dealing with Work Zone Speeds 10

Section 3 - Operation of the Portable Traffic Signals 11

How They Work 11
Signal Modes of Operation 12
Guidelines for Determining Signal Timing Parameters 14
Verification of Phase Timings 17
Field Check of Phase Timings 18
Flashing Operation 21

Section 4 - Glossary of Signal Terminology 23

Section 5 - References 25

 Preceding Page Blank

LIST OF FIGURES

Page

Figure 1. Field Setup of Portable Traffic Signals 1
Figure 2. Portable Traffic Signal Installation for Temporary Work Zone Control 5
Figure 3. Placement of Traffic Control Devices for Short-Term Stationary Maintenance Work Using Portable Traffic Signals 7
Figure 4. Driver Line of Sight Impeded by Horizontal Geometry and Roadside Objects 8
Figure 5. Driver Line of Sight Impeded by Vertical Geometry 8
Figure 6. Lengthening a Work Zone to Provide Adequate Line of Sight 9
Figure 7. Complete Signal Cycle for Portable Traffic Signal Installation 11
Figure 8. Computation of Maximum Wait Time for Portable Signals in Rural Two-Lane Maintenance Work Zone 20

LIST OF TABLES

Page

Table 1. Decision Sight Distance (*4*) 9
Table 2. Portable Traffic Signal Phases for Work Zone Application 14
Table 3. Green Phase Time Setting Per Approach..... 15
Table 4. Yellow Change Intervals for Various Speed and Grade Combinations (*5*) 16
Table 5. Work Zone Travel Time for Various Speeds and Work Zone Lengths..... 17
Table 6. Conditions for Type of Flashing Operation for Portable Traffic Signals 21

SECTION 1

APPLICABILITY OF PORTABLE SIGNALS IN TWO-LANE RURAL WORK ZONES

OVERVIEW

Portable traffic signals (see Figure 1) have been used on two-lane bridge construction projects throughout the state. Typically these projects have lasted a minimum of three months in duration and had work zone lengths ranging from 400 to 1200 feet, with clear line of sight through the work zone. The valuable experience gained from these projects has contributed to the awareness of this technology and its transferability to short-term lane closures.

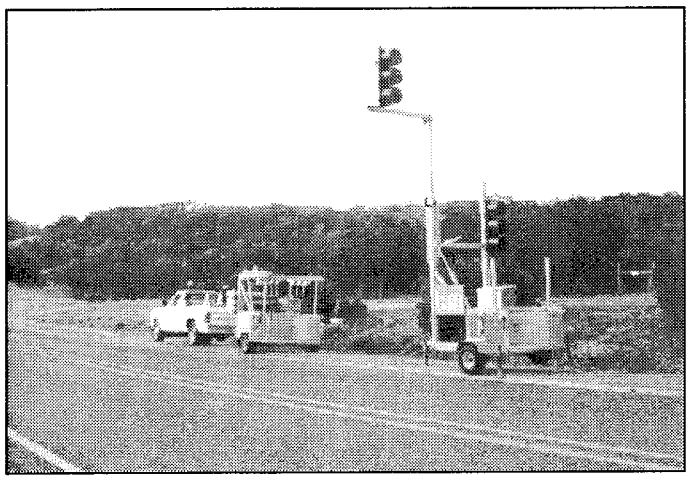

Figure 1. Field Setup of Portable Traffic Signals.

There are, however, characteristics unique to daily lane closures operated with portable traffic signals. Maintenance work can be carried out more efficiently in longer work zones than those found in the construction projects. Longer work zone lengths, in turn, can create concerns regarding sight distance and the amount of time motorists must wait for opposing traffic to clear the work zone before proceeding.

Many of the same safety concerns found in flagging operations for maintenance work are still present in signal-operated work zones. These concerns are as follows:

- opportunities for limited sight distance;
- excessive motorist delay time;
- intersecting streets and driveways; and
- high speeds through the work zone.

One of the safety concerns related to flagging that is alleviated with portable signals is the exposure of flagging personnel to vehicular conflicts. Guidelines for addressing the general safety and operational concerns with signal-operated work zones are provided in this document. Specific guidance is provided on the signal operation aspect of this technology.

BENEFITS OF USING PORTABLE SIGNALS IN PLACE OF FLAGGERS

The guidelines presented in this report were developed in part based on field testing experience. The following lists advantages of portable signals over flagging, as expressed by maintenance personnel who were involved in the test projects.

- Traffic signals communicate more directly with motorists than flaggers: red means "stop" and green means "go." Drivers tend to have a clearer understanding of and greater familiarity with traffic signals.

- Portable signals allow flaggers to do other work that is needed within the work zone.

- More work can be accomplished at a faster rate with the flagging personnel performing other tasks.

- Maintenance personnel are not exposed to vehicle conflicts and do not have to deal directly with angry motorists; there is no longer a need to rotate flaggers every two hours to prevent fatigue and stress.

- Maintenance work that affects the open traffic lane, such as reorienting equipment or applying a tack coat near the edge of the lane, can be coordinated much easier with the operation of the signals than with flaggers, especially with signal features that allow remote monitoring from within the work area.

TYPES OF MAINTENANCE PROJECTS

Many of the routine maintenance projects that would require flagging operations are candidates for portable signals. Emergencies and special events are also situations where the availability of portable signals can be advantageous.

Pavement Repair

All types of pavement repair work on two-lane roadways that would require flagging operation – including blade work on pavement or shoulders, base repairs, and surface repairs – are candidates for portable traffic signals. Pavement repair is the most common activity for which portable signals are used.

Roadside Maintenance

Roadside work, such as guardrail repair and ditch maintenance that requires one lane to be closed, are candidate projects.

Bridge Maintenance

Bridge work that requires a lane closure, such as bridge rail repairs and slope repairs, are applicable projects.

Emergencies

Portable signals are especially useful in situations where an emergency requires that a lane be closed for an extended period of time and/or overnight. Culvert washouts, emergency pavement failures, and roadway obstructions are examples.

Special Events

Portable signals can be set up in situations when a heavy influx of traffic is expected for an event, and signalized control is needed where it would not otherwise be required. Examples are festivals and sporting events. This field book does not provide specific guidelines on the use of portable signals for special events or for the application of portable signals at three-way or four-way intersections.

GUIDELINES FOR GENERAL USE IN ROUTINE MAINTENANCE

The efficiency and effectiveness of portable signals for two-lane work zones are maximized under these general conditions:

- **The routine maintenance work is at least a half-day project.**

The total time to set up the signals and put them into operation is approximately 45 minutes. It is true that other equipment mobilization and work area setup activities can take place simultaneously. Nonetheless, it is not cost effective to mobilize the signal trailers for projects of extremely short duration.

- **The equipment is used a minimum of eight to ten working days per month.**

Based on the efficiencies gained from its use, this general rule-of-thumb assures that the return on investment from the equipment occurs in a two-year time frame. The more frequently the signals can be used, the more quickly they pay for themselves and begin realizing savings. Sharing the equipment among adjoining maintenance sections to increase their frequency of use in turn increases the return on the investment. Conversely, less frequent use will result in a longer payback period and a longer time horizon before annual savings begin.

SECTION 2

SETTING UP THE WORK ZONE

FIELD INVENTORY

Before using the portable signals on a routine maintenance project, a field survey must be conducted to assess roadway and traffic conditions. This survey should be conducted on a day and time where traffic conditions will be similar to that experienced during the project. The information collected will be important in designing the work zone and in determining signal timing.

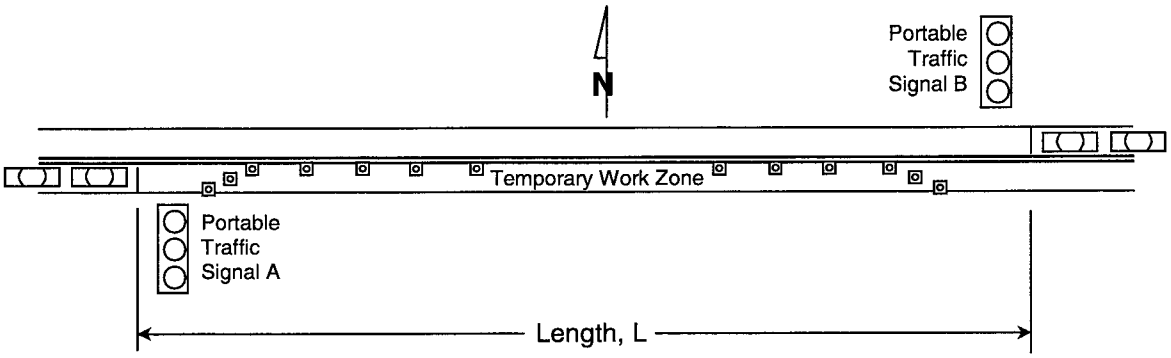

Figure 2. Portable Traffic Signal Installation for Temporary Work Zone Control.

As a minimum, the following field information should be recorded, some of which are described in more detail later in this guide:

1. **Identify locations for portable signal trailer units.** Check for level, stable shoulder areas, or clear zone space to place the trailers. Record the length between the proposed trailer locations. The practical maximum length of activity area for one-way traffic signal control should not exceed 2600 feet. Shorter lengths are desirable, especially if the activity area is on a roadway with limited sight distance and/or if higher volumes would encourage red-light violations. Signal timing (discussed later in this manual) may also limit the length of the work zone.

2. **Check the locations for adequate visibility of the signals as motorists approach them**. The signal locations will have to be adjusted if minimum sight distance guidelines are not met.

3. **Note the presence of intersecting streets and driveways**. As in a flagging operation, work zone limits should be established so that high-volume driveways and intersections with county/state routes are not located within the activity area. During the actual work, a maintenance technician will be required on the ground to help coordinate traffic flow should a driveway or street intersect the

work zone. Prior notification of adjacent property owners is a good way to avoid problems related to driveways and should aid in the improvement of driver compliance.

4. **Record traffic conditions.** For each direction of traffic, count the number of vehicles passing a stationary point during four-minute intervals. This is one measure to determine how many vehicles would be expected to queue at the signal. Document the flow of traffic between the two directions: is the flow evenly split between the two lanes, or is it uneven and favoring one direction over another? These conditions may change during the course of the day, and if so, traffic conditions at those times should be recorded as well.

5. **Document the speed at which motorists are approaching the proposed work zone.** The speed on approach is an important factor in determining sight distance requirements. It also is necessary as the basis for determining work zone speeds, which in turn is important for developing signal timing.

BASIC GUIDELINES FOR WORK ZONE TRAFFIC CONTROL DEVICES

Figure 3 shows the typical work zone layout using portable signals and the approach signs that are required. Here are additional considerations for work zone setup:

1. Use of portable signals does not preclude having flaggers present at locations within the work area where sight distances may be limited in one or both directions, or where high volume driveways or intersections are located within the work area.

2. Temporary traffic control signals shall meet the physical display and operational requirements of conventional traffic signals. Signal timing shall be established by qualified personnel and in accordance with established guidelines presented in this implementation guide.

3. Stop lines 24 inches wide and made of a removable material may be installed. Due to the short-term nature of the work, it is not practical to remove/cover other permanent pavement markings and raised pavement marking reflectors. After completion of the work, the stop lines shall be removed.

Night Closures

Portable signals are especially useful in situations where an emergency requires that a lane be closed for an extended period of time and/or overnight. For overnight use of portable signals, follow the guidelines found in the Texas Manual on Uniform Traffic Control Devices (TMUTCD)(*2*), Sections 6H-36 and 6H-37. These standards provide for illumination, pavement markings, and other important requirements necessary for nighttime operation. Clear line of sight from one end of the work zone to the other is important for overnight operations.

Posted Speed (MPH)	"X" Sign Spacings (Feet)	"X" Sign Spacings (Meters)
30 or less	120	40
35	160	50
40	240	75
45	320	100
50	400	120
55	500	150

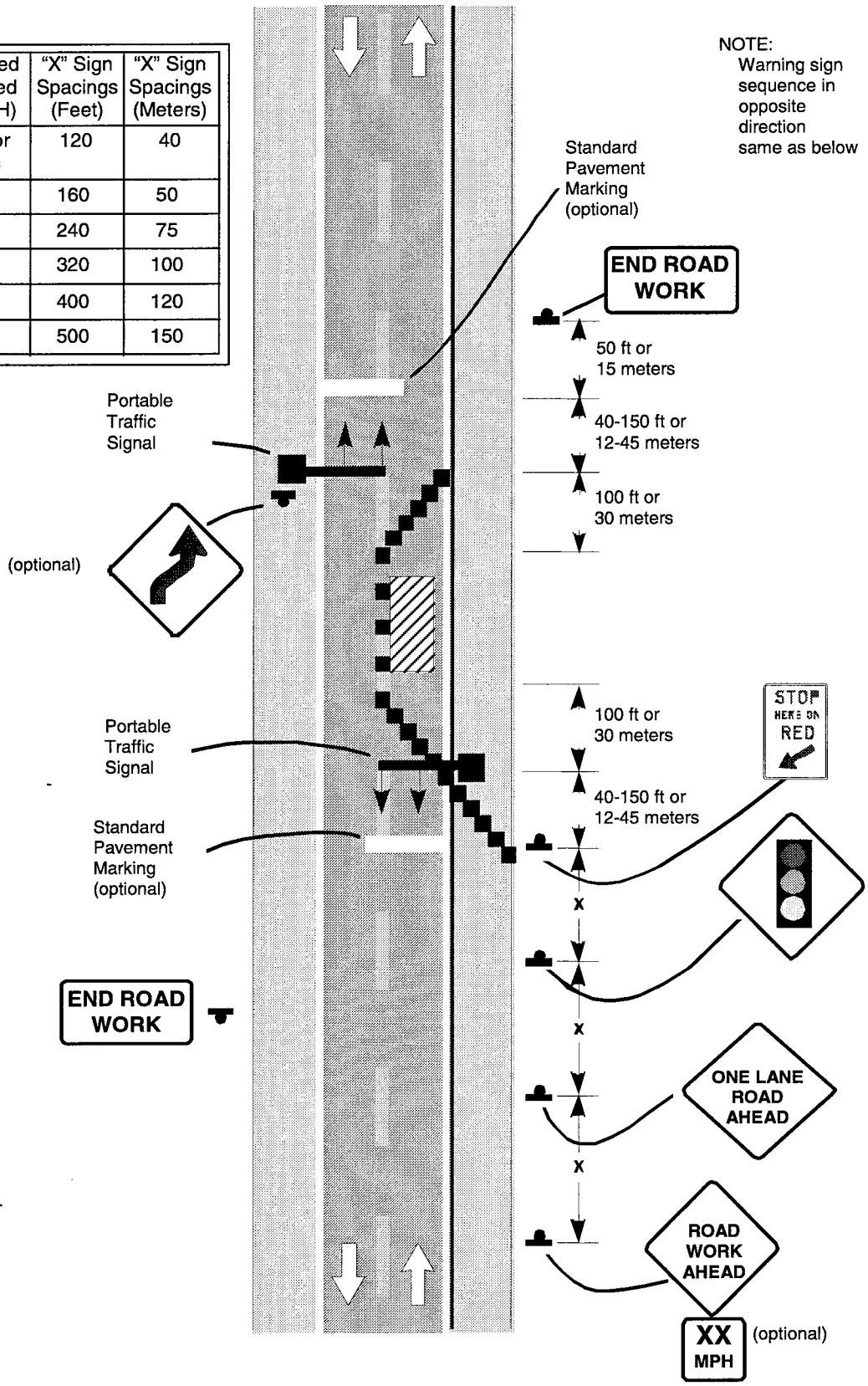

Figure 3. Placement of Traffic Control Devices for Short-Term Stationary Maintenance Work Using Portable Traffic Signals.

SITE-SPECIFIC CONSIDERATIONS

Determining Length of the Work Zone

The length of the work zone will be a function of the routine maintenance project scope and will be limited by the maximum time a motorist can be expected to wait before getting a green indication. The longer the work zone, the longer a motorist must wait for all opposing traffic to clear. A maximum reasonable wait time for a motorist at a rural work zone is four minutes, particularly if the motorist has restricted visibility of the work activity and the opposite end of the work zone. As part of the signal timing design, a check will have to be made to be certain the reasonable wait time is not exceeded. If it is exceeded, then adjustments will have to be made to shorten the work zone length.

Designing for Sight Distance

In all maintenance work zones, it is necessary for vehicles approaching the zone to have adequate time to see and respond to work zone traffic control devices. Figures 4 and 5 illustrate improper placement of portable traffic signals due to horizontal and vertical geometric limitations, respectively.

The Texas MUTCD (*2*) and national MUTCD (*3*) specify that all traffic signals have at least two signal heads per approach. If any signal heads are located above a travel lane, the bottom of such a signal head must be at least 15 feet in height, but no greater that 19 feet high.

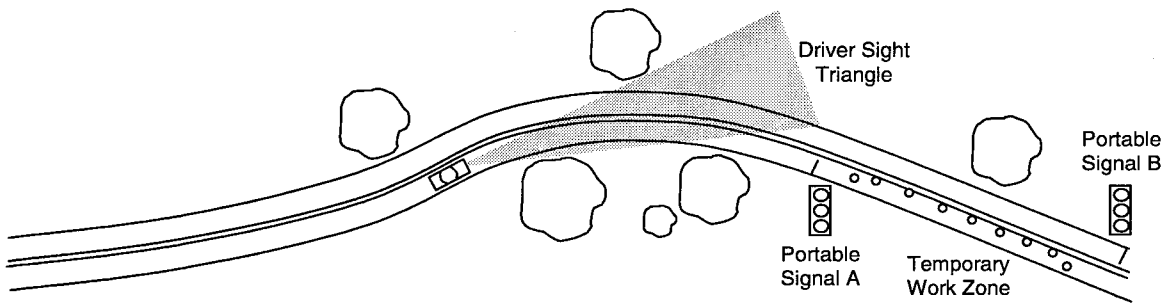

Figure 4. Driver Line of Sight Impeded by Horizontal Geometry and Roadside Objects.

Figure 5. Driver Line of Sight Impeded by Vertical Geometry.

The main factor in determining how much clear line of sight is required to see the signal heads and the work zone is the speed of vehicles approaching each side of the work zone. Table 1 shows you the necessary clear line of sight, based on the speed of approaching vehicles.

Table 1. Decision Sight Distance (*4*).

Design Speed (mph)	Decision sight distance (DSD) for rural road speed/path/direction change (feet)
30	450
40	600
50	750
60	1000
70	1100

If hills or curves in the road do not allow you to position the ends of the work zone such that you have the necessary clear line of sight shown in Table 1, lengthen the work zone to include the hill, curve, or roadside object that obstructs the clear line of sight of approaching motorists and check the available line of sight again. Figure 6 shows an example of lengthening a work zone to provide adequate line of sight.

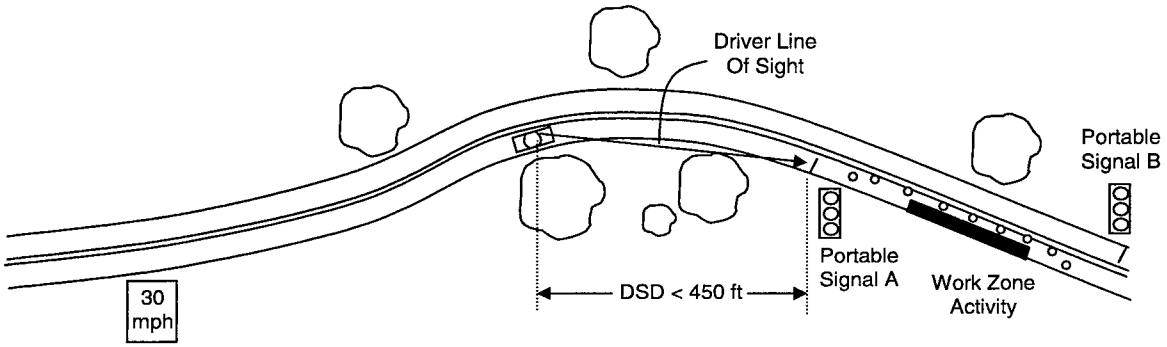

a). inadequate DSD (450 ft necessary at 30 mph) for safe work zone approach

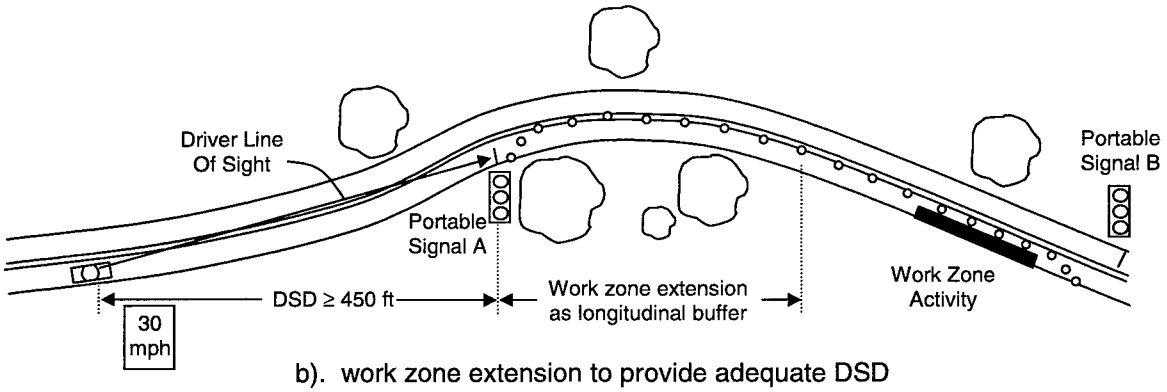

b). work zone extension to provide adequate DSD

Figure 6. Lengthening a Work Zone to Provide Adequate Line of Sight.

Handling Intersecting Streets and Driveways

Streets and driveways intersecting a work zone create difficulties for portable signal operation as well as for flagging operation. Section 6C-5 of the TMUTCD (*2*) should be followed:

> "Access should be controlled throughout the construction or maintenance work zone including all entering intersections within the zone. Driveways create a problem that may be monitored by flaggers."

Plan work zones to exclude intersections of heavily traveled streets. Station one technician on the ground to monitor work zone access if minor streets or driveways cannot be avoided. The responsibility of this technician would be to hold traffic until there is certainty of the direction of travel, either by a platoon of vehicles passing or through remote signal monitoring capability. Notification of adjacent property owners by letter or by a printed door/gate hanger would provide an additional warning about the presence of a one-lane, two-way operation.

Dealing with Work Zone Speeds

The speed of traffic traveling through a work zone operated by a portable traffic signal is a critical factor in determining signal timings. Work zone speed has a direct impact on safety because the lowest reasonable speed through the work zone is used to compute the red clearance interval. This interval is the time allotted for vehicles to pass through the work zone before opposing traffic is released.

In a portable traffic signal application, estimating the lowest speed that motorists are expected to be traveling is of critical importance. The dilemma occurs when a speed is chosen at which motorists are expected to travel, the signal clearance intervals are set for that chosen speed, and the actual speed of traffic turns out to be lower than expected. The potential for the opposing traffic to receive a green indication before traffic is cleared is heightened in this situation.

The guidelines for signal timing presented later in this manual are based on a conservative work zone travel speed of 20 mph. Advisory speed signing shown on Figure 3 is strongly recommended in conjunction with "Road Work Ahead" construction warning signs. The use of advisory speed signs can help reduce the variability of speeds through the work zone. If used, they should be displayed at either 20 mph or 25 mph.

SECTION 3

OPERATION OF THE PORTABLE TRAFFIC SIGNALS

HOW THEY WORK

Portable signals use the standard display for traffic signals: a green signal indication means it is safe to proceed, and a yellow indication means the green indication will be terminating. The portable traffic signal's red indication means it is no longer safe to enter the work zone. Traffic that is safely within the zone will be allowed sufficient time to clear the zone before a green signal indication is given for traffic in the opposing direction. A conflict monitor is used to ensure that conflicting traffic green indications are not presented simultaneously by the signals.

Figure 7 shows the various timing components of a portable traffic signal in a work zone, and how those components make a complete signal cycle. The signal displays on the horizontal bars labeled "G," "Y," and "R" correspond to the indications the driver on that particular approach will see. An east/west highway is used as an example. The descriptors above and below the bars describe the "phase timings" that must be determined before the controller can be programmed. A glossary of signal terminology is included at the back of this document.

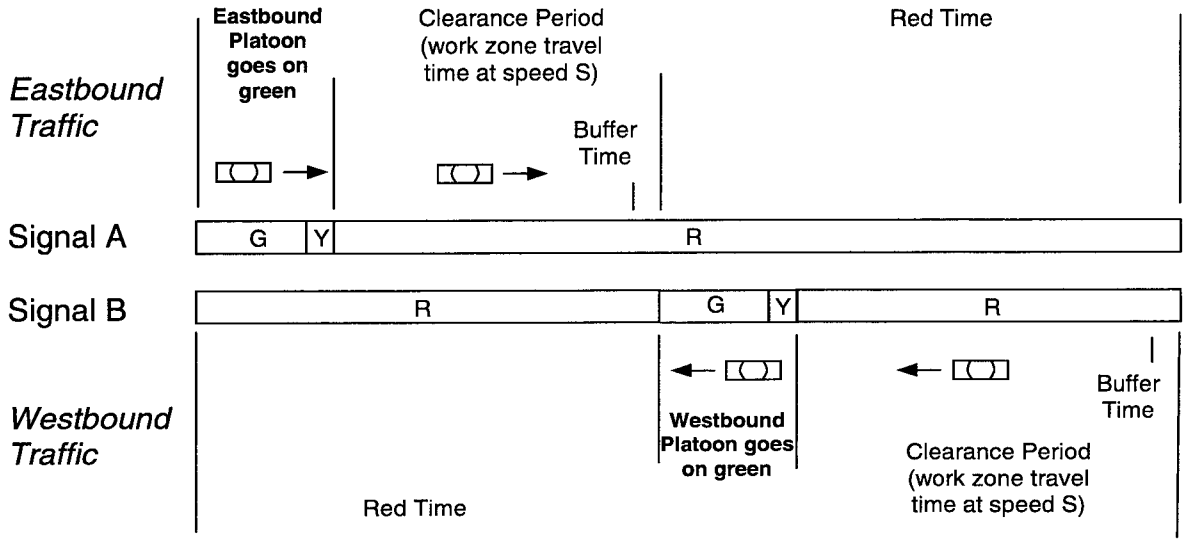

Figure 7. Complete Signal Cycle for Portable Traffic Signal Installation.

After conducting the field inventory, the steps for determining the timing components for programming the controller are:

1. Determine the SIGNAL MODE OF OPERATION.
2. Determine the PHASE TIMINGS.
3. Verify that the MAXIMUM CYCLE LENGTH OF 4 MINUTES (240 seconds) is not exceeded.

SIGNAL MODES OF OPERATION

Portable traffic signals can be programmed to operate in one of several different modes. The different modes are described below. Two units can be operated in a pretimed mode, which has a fixed duration green and clearance period for both approaching directions of traffic. Alternatively, the devices can be operated in one of several traffic actuated modes, which tend to be more responsive to real-time traffic demand at each signal. In any mode of operation, the portable traffic signals are programmed so adequate time is available to clear vehicles once they have entered the one-lane work zone.

Pretimed Operation

In pretimed mode, the duration of each green indication is the same, regardless of how many vehicles are present in the queue that is stopped at the signal. Initial timing of the greens for each of the two approaches requires that you have some idea about how much traffic there will be on each approach, and how much this traffic volume varies. Pretimed operation is best for regular (i.e., non-varying), predictable traffic volumes, whether they are low, medium, or high. Pretimed mode is also used where volumes are generally low, and vary only slightly. Pretimed mode is also a default mode that can be used if the detectors used with the portable signals are broken.

Traffic Actuated Operation (Red Rest)

Operation of portable traffic signals in an actuated mode means that some form of detection technology is being used at the site to identify the presence of, and possibly keep a running count of, vehicles that approach each side of the work zone. In red rest mode portable signals display a red indication to each side of the work zone until the detectors sense an approaching vehicle. If the clearance time has expired (i.e., any vehicles previously in the work zone have safely cleared), any vehicle approaching the signal will receive a green indication. The green is displayed for the minimum green time. Then the signal controller transitions to a yellow clearance interval before returning to rest in red. If the detectors sense a vehicle coming from the same direction

as a vehicle that has just received the green (but the controller has already advanced back to the red rest state), the controller immediately advances to green for the approaching vehicle. This series of events would not happen if the second vehicle approached the work zone from the opposing direction, because the controller would have to wait for the first vehicle to clear through the work zone before giving an opposing vehicle a green indication.

The signal controller begins timing the red clearance interval when the red signal indication is displayed. Essentially, the red clearance interval is the time required for a motorist to safely proceed through the work zone and have some "buffer" time between their departure from the work zone and the beginning of an opposing green indication (if a vehicle were present in queue waiting to enter the work zone from the opposing direction).

Traffic Actuated Operation (Favoring One Direction)

Rather than resting in red, the signals can also be set to rest in green for the higher volume direction of traffic, while resting in red for the opposing, lower volume direction. In this mode, the signal controller will rest in green for the higher volume approach and will only advance through yellow and red clearance to give the green to the lower volume approach when the detector senses a vehicle on that approach. If more than one vehicle is in queue on the lower volume approach, the green can be extended up to the maximum green time for that approach.

Traffic Actuated Operation (Recall to Minimum Green for Both Directions)

The portable signal controllers can also be set to give at least a minimum green, yellow, and red clearance time, in succession, to each direction of traffic. This mode of operation would be similar to pretimed operation, but on each side the green can be extended longer than the minimum time if multiple vehicles are waiting on that approach. As in all other modes of actuated operation, an upper limit of green time for each side, known as the maximum green time, prevents a long queue of vehicles on one side from holding the green too long and causing unacceptable delays to traffic in the opposing direction.

Manual Operation

Rather than using one of the automatic cycling modes of the signal controllers (i.e., pretimed or any of the actuated modes), the signals can also be manually operated by a member of the work crew. Such operation may be desirable if short-term detector problems are encountered, if highly variable volumes exceed the programmed maximum green times, or if work zone activity necessitates an unusual schedule of traffic flow interruptions. In manual mode, the controller can be advanced to green in either direction, or set to red for both directions. However, all red clearance times are observed by the controller (i.e., manually switching from green at one side to green at

the other side does not switch off one green and turn on the other green right away – red clearance remains enforced).

GUIDELINES FOR DETERMINING PHASE TIMINGS

Once the mode of operation is selected, the timings for each individual phase can be determined. Table 2 shows the phase timings needed for actuated and pretimed modes of operation.

Table 2. Portable Traffic Signal Phases for Work Zone Application.

MODE OF OPERATION	ACTUATED	PRETIMED
PHASES	Maximum Green Time Minimum Green Time Extension Interval	Green Time
	Yellow Change Interval	Yellow Change Interval
	Red Clearance Interval (Work Zone Travel Time plus Buffer Time)	Red Clearance Interval (Work Zone Travel Time plus Buffer Time)

Maximum Green Time (actuated operation) or Green Time (pretimed operation)

The green time that should be given for each approach is mainly determined by the number of vehicles expected during each cycle. The more vehicles, the greater the demand for green time. However, keep in mind that the first few vehicles at the signal will take extra time to determine that the signal is green and begin responding (i.e., stop braking and begin accelerating) to the green signal indication.

Table 3 can be used to approximate the amount of green time based on how many vehicles are expected each signal cycle. One thing to keep in mind when you are computing the green time for each approach is that the total waiting time for the queues on either side of the work zone should be less than 240 seconds (i.e., four minutes) wherever possible.

The green time settings shown in Table 3 are input as the green time for pretimed operation. In actuated operation, these values would be input as the maximum green time.

Minimum Green Time (actuated operation)

If operating in actuated mode, it will be necessary to specify the minimum green time, or the least amount of time a green indication will be displayed to each approach. This time should be at least the time required for one or two vehicles to safely start up and proceed into the work zone. A range of 7 to 10 seconds is usually appropriate.

Table 3. Green Phase Time Setting Per Approach.

Queued Vehicles Per Cycle	Green Time*,** (sec)
<5	12
5	15
10	27
15	39
20	51
25	63
30	75
35	87
40	99

* - Based on a total lost time of 3.3 seconds and a saturation flow of 1500 passenger cars per hour green per lane.
** - Long green times may cause wait times in the opposing direction to be greater than 240 seconds, depending on the length of the work zone.

Extension Interval (actuated operation)

If you are operating portable signals in actuated mode, it will also be necessary to specify the extension interval, or the amount of green time added to the active green phase each time another oncoming vehicle is detected. Based on the fact that motorists approaching a portable traffic signal are likely to be more conservative than motorists at a standard signalized intersection, a practical extension interval is 2.4 seconds. If the signal controller accepts only round number settings, an extension interval of 3 seconds can be used. Extension intervals that are too short will not give vehicles adequate time to reach and pass through the signal; extension intervals that are too long will unnecessarily extend the green and cause higher delays to traffic in the opposing direction.

Yellow Change Interval

A yellow indication is always used in normal operation to terminate a green indication and inform motorists that a change in right-of-way is occurring. The guidelines that exist for the duration of the yellow interval at signalized intersections are largely dependent on speed and are also applicable to portable traffic signals. Different combinations of speed and grade produce the values in Table 4.

Table 4. Yellow Change Intervals for Various Speed and Grade Combinations (*5*).

Speed* (mph)	Grade of Approach								
	Uphill				Level	Downhill			
	+4%	+3%	+2%	+1%	0	-1%	-2%	-3%	-4%
25	2.7	2.7	2.8	2.8	2.9	2.9	3.0	3.1	3.2
35	3.3	3.4	3.5	3.5	3.6	3.6	3.8	3.9	4.0
45	4.0	4.1	4.2	4.2	4.4	4.5	4.6	4.7	4.8

* Speed is 85th percentile speed

Red Clearance Interval

Portable traffic signals make use of the red clearance interval, or "all red" period to allow vehicles that have entered the work zone under a green or yellow indication to safely pass through and exit the one-lane work zone. A red indication is displayed to traffic at both ends of the work zone.

The two factors that determine the duration of the red clearance interval are as follows:

(1) the speeds at which motorists will drive through the one lane work zone; and
(2) the amount of buffer time between the vehicles that have completed travel through the zone and the start of green phase for opposing direction traffic.

Red Clearance Interval = Work Zone Travel Time + Buffer Time

Work Zone Travel Time

Since faster vehicles will pass through the work zone more quickly than slower vehicles, it is necessary for safe operation to design the duration of the red clearance around the slowest reasonable speed that motorists will use in the work zone.

The speed used to compute the red clearance interval will depend on a number of factors, including the location and length of the work zone, any work zone speed reduction and/or warning signing, the normal speeds and speed limit on the facility, and the duration and nature of work in the work zone. Table 5 contains travel time values for the indicated work zone lengths. **A speed of 20 mph is a reasonable value to use**

for most cases. Note that the values in Table 5 are for travel time at the given speed only; they do not include any buffer time.

Table 5. Work Zone Travel Time for Various Speeds and Work Zone Lengths.

Lowest Reasonable Speed (mph)	Work Zone Travel Time (sec) by Work Zone Length (feet)									
	250	500	750	1000	1250	1500	1750	2000	2250	2500
15	11	23	34	45	57	68	79	91	102	113
20	9	17	26	34	43	51	60	68	77	85
25	7	14	21	24	34	41	48	55	61	68

Buffer Time

Buffer time is a safety time cushion that helps guarantee that vehicles entering/departing the work zone in opposing directions are separated in time. The red clearance time entered into the portable signal controllers is based on the length of the work zone (from stop bar to stop bar) and the safe speed motorists are expected to drive through the zone. Since motorists drive different speeds, depending on the relative hazard perceived when driving through the work zone (or how vigilantly they control their speed with respect to work zone speed signing), variation in work zone travel time always exists.

It is in the interest of safety that the red clearance time entered into the portable signal controllers be based on the lowest reasonable speed expected for motorists as they drive through the zone. However, it is likely that a very slow motorist (i.e., slower than the speed used to compute the red clearance time), or a motorist that pauses or stops in the work zone due to a perceived or actual conflict with work zone maintenance equipment, will travel through the work zone. Since it will take this motorist longer than the red clearance time to safely travel through the work zone, a buffer time is entered into the controller so that departing traffic is safely separated in time from traffic that will enter the work zone from the opposing direction. The buffer time should be based on engineering judgement and knowledge of motorist behavior and speed variability along the work zone roadway. Typical buffer time values are 3 to 5 seconds. Recall that the buffer time is added to the red clearance time for each direction, and this sum is entered into the controller as the (directional) red clearance time.

VERIFICATION OF PHASE TIMINGS

Once all green time, yellow change, and red clearance (including buffer time) signal settings have been computed, checks should be made to ensure that the combinations of these settings do not produce an excessive wait time for queues of vehicles at either

end of the work zone. The following equations can be used to compute the maximum wait time for each direction. The equations assume that traffic is east and westbound.

$$\text{Maximum Wait Time (eastbound traffic)} = Y_e + R_e + G_{w,\,max} + Y_w + R_w \qquad (1)$$

where: Y_e, Y_w = yellow clearance time in seconds (eastbound, westbound)
R_e, R_w = red clearance time based on travel time and buffer time, in seconds (eastbound, westbound)
$G_{w,\,max}$ = maximum green time in the westbound direction, seconds

$$\text{Maximum Wait Time (westbound traffic)} = Y_w + R_w + G_{e,\,max} + Y_e + R_e \qquad (2)$$

where: Y_e, Y_w = yellow clearance time in seconds (eastbound, westbound)
R_e, R_w = red clearance time based on travel time and buffer time, in seconds (eastbound, westbound)
$G_{e,\,max}$ = maximum green time in the eastbound direction, seconds

- ✓ **The maximum wait time in each direction should be less than 240 seconds, if at all possible.**
- ✓ **If the 240-second threshold is exceeded, the work zone length should be reduced and the phase timing values recalculated.**
- ✓ **The calculated buffer time is not entered directly into the portable signal controller; it is added to the red clearance based on travel time, and this sum is entered as the total red clearance time for each direction.**

Figure 8 is an example of the breakdown in phase timing elements present at a work zone controlled by portable traffic signals, and it shows the computation of maximum wait time. All timings shown in Figure 8 are examples only; actual signal settings will be based on work zone characteristics, field conditions, and signal programmer judgement.

FIELD CHECK OF PHASE TIMINGS

Once timings have been determined and implemented for a project, it is important to monitor how well the signal operates in the field. A check should be made to see if all phase timings are appropriate.

If operating in pretimed mode and the green times appear to be too short (i.e., vehicles consistently remain in the queue at the onset of yellow), consider increasing the green time by a few seconds. Conversely, if the pretimed operation green time appears too long (i.e., the signal consistently remains green even after all vehicles in the queue have departed), reduce the green time by a few seconds. In actuated mode, it is usually only necessary to determine whether or not the maximum time is too low (i.e., vehicles remain in queue at the onset of yellow). If there is insufficient green time, increase the maximum green time by a few seconds.

In addition to observing operations from the ground, driving through the work zone at the general speed of traffic is a good way to assess conditions. The time it takes to travel through the work zone should be consistent with the values shown in Table 5. Modifications to phase timings should be within the guidelines presented in this guidebook.

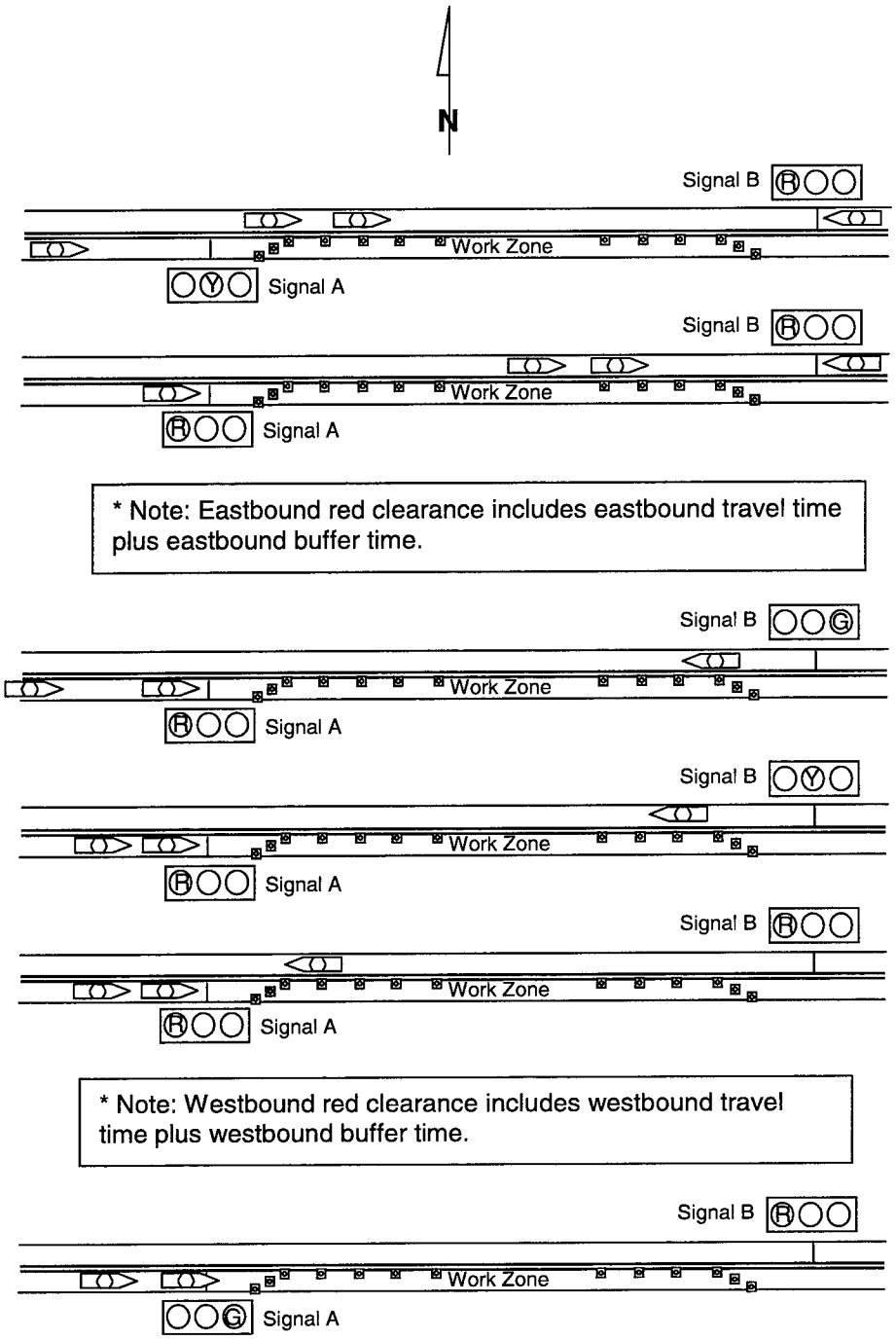

Timing Element and Symbol	Example Duration, (seconds)
Eastbound Yellow, Y_e	4
Eastbound Red Clearance, R_e	101
Westbound Maximum Green Time, $G_{w,\,max}$	30
Westbound Yellow, Y_w	4
Westbound Red Clearance, R_w	101
Eastbound Green Time Begins	

Maximum Wait Time (Eastbound Traffic) = 240

Figure 8. Computation of Maximum Wait Time for Portable Signals in Rural Two-Lane Maintenance Work Zone.

FLASHING OPERATION

Use the table below as a guide for determining appropriate signal modes of operation for unique situations.

Table 6. Conditions for Type of Flashing Operation for Portable Traffic Signals.

	CLEAR LINE OF SIGHT through work zone from end to end	NO CLEAR LINE OF SIGHT through work zone from end to end
ALL LANES OPEN During setup/take-down operations and daytime breaks (when there are NO obstructions in the roadway and both lanes fully operational)	Flash yellow to both directions of traffic	Flash yellow to both directions of traffic
DEFAULT EMERGENCY OPERATION Due to equipment malfunction	Flash red to both directions of traffic	Display solid red indications to both directions of traffic Flagging operation should begin immediately
TEMPORARY OPERATIONS Brief hold of traffic while work performed in travel lane	Display solid red to both directions of traffic	Display solid red to both directions of traffic

In all modes of operation the indications presented to motorists by the signals are monitored by a conflict monitor, or watchdog, device. This device operates independently from the internal electronics that perform the controller timing functions. It exists solely to determine whether or not the controller logic attempts to implement settings that violate clearance times or present conflicting phase indications simultaneously. If the watchdog detects any abnormalities in the timing instructions output by the controller logic, it will customarily go to red for all approaches. However, some variability exists into how the watchdog response is programmed. For instance, if both ends of the work zone are visible to one another, the watchdog may be set to flash in red if it detects any problems with the signal output of the controller.

SECTION 4

GLOSSARY OF SIGNAL TERMINOLOGY

A variety of terms pertaining to work zone setup and requirements can be found in Part VI, Section 6C of the TMUTCD (*2*). The following glossary pertaining to traffic signal terminology contains terms from several sources, including references (*6*) and (*7*).

Cycle Length, or Cycle - Time elapsed between the start of successive green indications for same-direction traffic. The cycle length is fixed, or constant, in pretimed operation and variable in actuated operation.

Minimum Green Time - The shortest green time of a phase. If a time setting control is designated as minimum green, the green time shall not be less than that setting. For a fully-actuated controller, this is the first timed portion of the green interval. It is usually set (i.e., for permanent signal installations) considering the number of waiting vehicles between the detector and stop line, though this definition may not be applicable (depending on sensing equipment) for portable signals.

Maximum Green Time - In actuated controllers, the longest time for which a green indication will be displayed (and the longest the green indication can be extended) in the presence of a call on an opposing phase.

Pretimed Operation - Operation of traffic signals with predetermined fixed cycle length, fixed interval duration, and fixed interval sequence.

Actuated Operation - Operation of traffic control signals in accordance with the varying demands of traffic as registered with the controller by traffic detectors.

Red Rest - Display of the red indication for all signal phases after the expiration of all clearance intervals.

Extension Interval - For a fully actuated controller, that portion of the green interval in which timing resets with each subsequent vehicle actuation, thus extending the green interval.

Yellow Change Interval - Signal interval following the green display for each phase which indicates a change in right-of-way assignment is occurring. Longer yellow change intervals are used with higher approach speeds.

Red Clearance Interval - Interval following the yellow portion of each phase. Red clearance at standard intersections is designed around intersection width and vehicle speeds. In the case of portable traffic signals, the red clearance is the time required to safely travel through the work zone.

Buffer Time - A signal phasing period designed as a safety cushion to separate departing and approaching (i.e., and conflicting) traffic movements through the one-lane work zone. The tail end of the red clearance period is referred to as the buffer time, especially when this time has been specifically designed and incorporated for safety.

Detector - A sensing device used with actuated control that is able to identify when a vehicle is approaching or stopped at an intersection. Detectors using a variety of sensing technologies are available. Most intersections use in-pavement loop detectors, whereas portable signals commonly use either microwave, infrared, or video detection.

Gap Out - If no vehicles pass the detector during the vehicle (i.e., green) interval, the signal will gap out. In other words, the green time counts down to zero, and the signal changes to yellow, and then to red.

SECTION 5

REFERENCES

1. Ginger Daniels, Steven Venglar, and Dale Picha. *Feasibility of Portable Traffic Signals to Replace Flaggers in Maintenance Operations.* Report No. TX–99/3926-1, Texas Transportation Institute, February 1999.

2. *Texas Manual on Uniform Traffic Control Devices.* Texas Department of Transportation, Austin, Texas, 1980 (Revision 5, March 1994).

3. *Manual on Uniform Traffic Control Devices.* United States Department of Transportation, Federal Highway Administration, 1988.

4. *A Policy on Geometric Design of Highways and Streets.* American Association of State Highways and Transportation Officials, 1990.

5. ITE Technical Council Task Force 4TF-1. *Determining Vehicle Signal Change and Clearance Intervals.* Institute of Transportation Engineers, August 1994.

6. *Traffic Engineering Handbook, Fourth Edition.* Institute of Transportation Engineers, Prentice Hall, 1992.

7. Robert L. Gordon, et al. *Traffic Control Systems Handbook.* United States Department of Transportation, Federal Highway Administration, 1996.