PB98-164643

SEISMIC PERFORMANCE AND RETROFIT OF MULTI-COLUMN BRIDGE BENTS

WA-RD 449.1

Final Report
August 1998

Washington State Department of Transportation

Washington State Transportation Commission
Planning and Programming Service Center
in cooperation with the U.S. Department of Transportation
Federal Highway Administration

REPRODUCED BY: NTIS
U.S. Department of Commerce
National Technical Information Service
Springfield, Virginia 22161

TECHNICAL REPORT STANDARD TITLE PAGE

1. REPORT NO. WA-RD 449.1	PB98-164643	3. RECIPIENT'S CATALOG NO.
4. TITLE AND SUBTITLE Seismic Performance and Retrofit of Multi-Column Bridge Bents		5. REPORT DATE August 5, 1998 6. PERFORMING ORGANIZATION CODE
7. AUTHOR(S) David I. McLean, Scott E. Kuebler and Timothy E. Mealy		8. PERFORMING ORGANIZATION REPORT NO.
9. PERFORMING ORGANIZATION NAME AND ADDRESS Washington State Transportation Center (TRAC) Civil and Environmental Engineering; Sloan Hall, Room 101 Washington State University Pullman, Washington 99164-2910		10. WORK UNIT NO. 11. CONTRACT OR GRANT NO. T9902-16
12. SPONSORING AGENCY NAME AND ADDRESS Washington State Department of Transportation Transportation Building, MS 7370 Olympia, Washington 98504-7370		13. TYPE OF REPORT AND PERIOD COVERED Research Report 14. SPONSORING AGENCY CODE

15. SUPPLEMENTARY NOTES

This study was conducted in cooperation with the U.S. Department of Transportation, Federal Highway Administration.

16. ABSTRACT

This study investigated retrofitting measures for improving the seismic performance of existing multi-column bridge bents. Experimental tests were conducted on 1/4.5-scale footing and column assemblages which incorporated details that were selected to represent deficiencies present in older bridges. Various retrofit measures for the bents were evaluated. The specimens were subjected to increasing levels of cycled inelastic lateral displacements under constant axial load. Specimen performance was evaluated on the basis of load capacity, displacement ductility, strength degradation and hysteretic behavior.

Tests on the as-built specimens resulted in severe cracking in the footings due to insufficient joint shear strength in the column/footing connections. However, due to structural redundancy, the bents continued to resist lateral loads until eventual bent failure occurred as a result of flexural hinge degradation in the columns.

Measures developed previously for retrofitting single-column bent bridges were found to be effective in improving the performance of the footings and columns. When all substructure elements were retrofitted, a ductile bent response was obtained. Retrofitting only some of the substructure elements resulted in incremental improvements in performance according to the number of elements retrofitted. While extensive damage occurred in the unretrofitted elements, the damaged regions continued to transfer forces during testing, enabling a stable bent response until failure occurred within one or more of the retrofitted elements.

The addition of a stiff link beam just above the footings was found to be effective in preventing damage in the footings during testing, and a reasonably ductile bent response was achieved. Because the link beam retrofit may not require retrofitting of the footings, this strategy may be a very cost-effective approach for retrofitting multi-column bents.

17. KEY WORDS seismic retrofitting, reinforced concrete, bridges, substructures, multi-column bents	18. DISTRIBUTION STATEMENT No restrictions. This document is available to the public through the National Technical Information Service, Springfield, VA 22616

19. SECURITY CLASSIF. (of this report)	20. SECURITY CLASSIF. (of this page)	21. NO. OF PAGES	22. PRICE
None	None	58	

Research Report

Research Project T9902
Multi-Column Retrofit - Experiments

SEISMIC PERFORMANCE AND RETROFIT OF MULTI-COLUMN BRIDGE BENTS

by

David I. McLean	Scott E. Kuebler	Timothy E. Mealy
Associate Professor	Graduate Student	Graduate Student

Washington State Transportation Center (TRAC)
Department of Civil and Environmental Engineering
Washington State University
Pullman, Washington 99164-2910

Washington State Department of Transportation
Technical Monitor
Chuck C. Ruth
Bridge and Structures Branch Engineer

Prepared for

Washington State Transportation Commission
Department of Transportation
and in cooperation with
U.S. Department of Transportation
Federal Highway Administration

August 1998

DISCLAIMER

The contents of this report reflect the views of the authors, who are responsible for the facts and the accuracy of the data presented herein. The contents do not necessarily reflect the official views or policies of the Washington State Transportation Commission, Department of Transportation, or the Federal Highway Administration. This report does not constitute a standard, specification, or regulation.

TABLE OF CONTENTS

Section **Page**

Executive Summary ..... **vi**

Introduction **1**
- Introduction and Background 1
- Research Objectives 2

Previous Research and Current Practice **3**
- Substructure Deficiencies 3
- Column Retrofitting 5
- Foundation Retrofitting 6
- Multi-Column Bent Retrofitting 8

Experimental Testing Program **12**
- Test Specimens and Parameters 12
- Test Setup and Procedures 15

Research Findings and Discussion **19**
- Tests on the As-Built Specimens 19
  - General Behavior and Failure Mechanism 19
- Test on the Fully Retrofitted Specimen 24
  - Retrofit Description 24
  - Test Results 25
- Tests on the Partially Retrofitted Specimens 29
  - Test Results 29
- Test on Shear Retrofitted Specimen 34
  - Test Results 34
- Test on Link Beam Retrofitted Specimen 37
  - Retrofit Description 37
  - Test Results 39
- Comparisons of Specimen Performance 42
  - Load vs. Displacement Response 42
  - Energy Dissipation 42

Conclusions **46**

Recommendations/Applications/Implementation **47**

Acknowledgments **49**

References **50**

LIST OF FIGURES

Figure		Page
1.	Substructure retrofit measures	9
2.	Link beam retrofit concept	11
3.	Details of Specimen No. 1 representing as-built conditions	13
4.	Testing setup	17
5.	Photograph showing the testing setup	18
6.	Load-displacement curves for Specimen No. 2	21
7.	Cracking in the footings of Specimen No. 2	22
8.	Damage in the top hinge regions of the columns of Specimen No. 2	23
9.	Retrofit scheme applied to Specimen No. 3	26
10.	Load-displacement curves for Specimen No. 3	27
11.	Specimen No. 3 during testing	28
12.	Load-displacement curves for Specimen No. 4	30
13.	Envelopes of the applied axial loads for the columns of Specimen No. 4	32
14.	Load-displacement curves for Specimen No. 5	33
15.	Load-displacement curves for Specimen No. 6	35
16.	Photograph of Specimen No. 6 during testing	36
17.	Details of the link beam retrofit	38
18.	Load-displacement curves for Specimen No. 7	40
19.	Photograph of Specimen No. 7 during testing	41
20.	Envelopes of load-displacement curves for as-built, fully retrofitted and partially retrofitted specimens	43
21.	Load-displacement curve areas vs. specimen drift ratio	44

LIST OF TABLES

Table		Page
1.	Summary of the Test Specimens	15

EXECUTIVE SUMMARY

This study investigated retrofitting measures for improving the seismic performance of existing multi-column bridge bents. Experimental tests were conducted on 1/4.5-scale footing and column assemblages which incorporated details that were selected to represent deficiencies present in older bridges. Various retrofit measures for the bents were evaluated. The specimens were subjected to increasing levels of cycled inelastic lateral displacements under constant axial load. Specimen performance was evaluated on the basis of load capacity, displacement ductility, strength degradation and hysteretic behavior.

Tests on the as-built specimens resulted in severe cracking in the footings due to insufficient joint shear strength in the column/footing connections. However, due to structural redundancy, the bents continued to resist lateral loads until eventual bent failure occurred as a result of flexural hinge degradation in the columns.

Measures developed previously for retrofitting single-column bent bridges were found to be effective in improving the performance of the footings and columns. When all substructure elements were retrofitted, a ductile bent response was obtained. Retrofitting only some of the substructure elements resulted in incremental improvements in performance according to the number of elements retrofitted. While extensive damage occurred in the unretrofitted elements, the damaged regions continued to transfer forces during testing, enabling a stable bent response until failure occurred within the retrofitted elements.

The addition of a stiff link beam just above the footings was found to be effective in preventing damage in the footings during testing, and a reasonably ductile bent response was achieved. Because the link beam retrofit may not require retrofitting of the footings, this strategy may be the most cost-effective and therefore optimal approach for retrofitting multi-column bents.

INTRODUCTION

INTRODUCTION AND BACKGROUND

Bridge structures built before the implementation of modern seismic design codes have historically been vulnerable to the effects of seismic loading. Substructure deficiencies present in most bridges built prior to the 1971 San Fernando earthquake have resulted in incidences of severe bridge damage and collapse in recent earthquakes. The poor reinforcement detailing in the columns and footings common in older bridges does not provide the ductility necessary to withstand the effects of a significant seismic event. Research has also shown that footings can be vulnerable to joint shear failure within the column/footing connection.

As a result of the damage to older bridges, efforts have been made to develop and implement retrofit strategies to upgrade the seismic performance of existing bridges by enhancing the ductility of the substructure elements. A typical method to improve the ductility of columns is to provide additional passive confinement in the plastic hinge regions. This is most commonly done through the use of steel jacketing (Chai, et al, 1991), but techniques utilizing fiberglass/epoxy systems (Hexcel-Fife, 1994) and high-strength fiber wraps (XXSYS, 1996) have also been developed. Methods for retrofitting the footing to improve seismic performance include adding a concrete overlay to the top of the footing and/or increasing the plan dimensions or adding new piles (Xiao, et al, 1994; McLean and Marsh, 1998). Most of this previous research has focused on single-column bents.

An option included in current strategies for multi-column bridge bents is to retrofit only a few of the substructure elements. This partial retrofit strategy is driven primarily by

economics, particularly the cost of retrofitting the footings. With this strategy, it is assumed that in the unretrofitted column elements flexural strength will degrade in an earthquake, resulting in approximately pinned-end conditions at the plastic hinge regions of the columns. Further, it is assumed that the shear and axial capacities of the degraded hinge regions will remain intact, with these capacities in fact being relied upon to contribute to the lateral resistance of the bridge.

This research report presents the main results and conclusions from a study investigating various retrofitting methods for improving the seismic performance of existing multi-column bridge bents. Experimental tests were conducted on 1/4.5-scale specimens consisting of a three-column bent supported on spread footings which were subjected to reversed cyclic inelastic deformations representative of earthquake loadings. The test specimens incorporated both footing and column deficiencies typical in bridges built prior to 1971, to which various retrofitting measures were applied. The retrofit methods were evaluated in terms of benefits and feasibility.

RESEARCH OBJECTIVES

The objectives of this study were as follows:

1. to establish by experimental testing the expected performance of the substructures of existing multi-column bent bridges without any retrofitting measures;
2. to evaluate the application of retrofit measures developed for single-column bent bridges to multi-column bent bridges;

3. to evaluate the feasibility and benefits resulting from retrofit measures applied to only a few of the substructure elements;

4. to evaluate the effectiveness of a proposed retrofit measure for multi-column bridges consisting of the addition of a link beam within the bent; and

5. to draw conclusions and make recommendations for practical methods of evaluating and improving the safety of substructures in existing multi-column bridges.

PREVIOUS RESEARCH AND CURRENT PRACTICE

SUBSTRUCTURE DEFICIENCIES

A common deficiency found in older bridge columns is an insufficient amount of transverse reinforcement. Typically, No. 3 or No. 4 hoops at 0.3 m (12 in.) on center were used in columns, regardless of the column cross-sectional dimensions, and the hoops had short extensions and anchorage only by lapping the ends in the cover concrete. Further, intermediate ties were rarely used. This detail results in many older columns being susceptible to shear failures, and it provides little confinement for developing the full flexural capacity or preventing buckling of the longitudinal reinforcement.

Another detail commonly used in older bridges was splicing of the longitudinal bars at the bottom of the columns. Often, starter bars were extended only 20 longitudinal bar diameters (d_b) from the foundations, which does not provide sufficient length to develop the yield strength of the reinforcement, thus leading to bond failure. These deficiencies result in a high potential for flexural strength degradation at splice locations in the event of a large earthquake.

Many older bridges were designed for primarily gravity loads with little or no lateral forces from earthquake loading being considered. As a result, the foundations in many older bridges are undersized, making them overturning critical. Further, the foundations typically contain no top reinforcement and may be susceptible to brittle flexural failures in an earthquake. Older foundations may also be susceptible to shear failures, both within the footings and in the column/footing joints. When piles are present, there is often no structural connection between the piles and the pile cap. All of these foundation problems may be exacerbated by retrofit measures applied to other sections of the bridge.

Limited information is available on the lateral load response of multi-column bridges. Eberhard and Marsh (1997) subjected two reinforced concrete, two-column, bridge bents to large transverse displacements. The bents contained detailing deficiencies typical of the 1960's, including minimal transverse reinforcement, short column reinforcing splices, and a lack of top reinforcement in the footings. Despite their deficiencies, the bents resisted transverse loads equal to nearly 40% of the bridge's weight at a drift ratio of 3%. Failure in the bents was due to concrete spalling and reinforcing bar buckling in the top hinging regions of the columns during cycling at a drift ratio of 3%. Due to significant soil backfill around the columns, no footing damage was observed. Damage to the cap beam consisted of minor cracking. In contrast, Sexmith, et al (1997) observed very significant damage in the cap beam during the testing of a two-column bent specimen incorporating known seismic deficiencies. The damage in the cap beam was attributed to shear distress and reinforcement anchorage failure.

COLUMN RETROFITTING

Previous research (Priestley and Seible, 1991; Chai, Priestley and Seible, 1991) has shown that an effective column retrofit method for both circular and rectangular columns is steel jacketing the columns. The steel jacket is made slightly larger in size than the columns, and the space between the jacket and column is filled with grout. The research has shown that, in order to achieve the needed lateral confinement with the retrofit, circular or elliptical jacketing is necessary. Test results showed that jacketing of the columns can improve the hinge and/or splice region performance (partial height jacketing) and column shear performance (full height jacketing).

Based on these research studies, Caltrans (1992) has implemented standardized column retrofit procedures: the Class P retrofit and the Class F retrofit. Steel jackets with a minimum thickness of 1 cm (3/8 in.) are typically used. Circular or elliptical jackets are used depending on whether the column is circular or rectangular. The Class P retrofit provides partial confinement in the plastic hinging region, with the intent of developing a pseudo pinned-end condition at the bottom of the column. The Class F retrofit results in a preservation of the full flexural capacity of the column and typically requires retrofitting of the footing in order to carry the forces transferred from the column. Details of the Caltrans procedures for column retrofit design are provided in the "Memo to Designers, 20-4" (Caltrans, 1992). Based largely on these procedures, the FHWA provides guidelines for retrofitting columns in its *Seismic Retrofitting Manual for Highway Bridges* (1995).

FOUNDATION RETROFITTING

Caltrans (1992) has developed general procedures for designing foundation retrofits. Based on developing the plastic moment capacity of the columns, the foundation is checked for flexural and shear strengths and overturning. To increase overturning resistance, the foundation may be enlarged, additional piles provided, or soil anchors added. To provide negative moment strength and to increase shear strength, a concrete overlay is added to the top of the existing foundation. Horizontal reinforcement is incorporated into the overlay, and reinforcing dowels connect the overlay to the existing foundation.

Two areas of concern have been raised with the Caltrans footing retrofit procedures. Priestley et al (1996) have noted the possible unconservativeness of using the full width of the foundation in both shear and flexural calculations. They recommend an effective section width, and thus width containing the participating reinforcement, be taken not larger than the column width plus twice the effective depth of the footing. Priestley et al (1996) also noted that the column/footing joint may be susceptible to shear failure. Testing conducted at the University of California, San Diego of a typical 1960's design of a footing resulted in such a joint shear failure.

Priestley (1991) developed a simple method of checking the principal tension stress in the column/footing joint region for assessing joint shear failure. The principal tension stress in the joint region is calculated using Mohr's circle of stress based on the axial and shear stresses within the joint. Based on this approach, Priestley proposed that joint shear distress will occur when the principal tension stress exceeds $0.29\sqrt{f'_c}$ MPa ($3.5\sqrt{f'_c}$ psi), where f'_c is the concrete compressive strength. However, values up to $0.42\sqrt{f'_c}$ MPa ($5.0\sqrt{f'_c}$ psi) can

be sustained if the column and footing remain in the elastic range.

In the FHWA's *Seismic Retrofitting Manual for Highway Bridges* (1995), only general guidelines based on theoretical considerations are given. The retrofit manual notes the need for experimental testing of footing retrofit strategies as several recommendations are given as being tentative pending verification by tests.

Xiao, et al (1994, 1996) tested specimens with as-built and retrofitted footings. Tests on the as-built specimen resulted in a column/footing joint shear failure. The calculated maximum principal tension stress in the column/footing joint region was $0.44\sqrt{f'_c}$ MPa ($5.22\sqrt{f'_c}$ psi), supporting the previously discussed stress limits. Retrofitted specimens incorporating an overlay designed using current Caltrans standards performed better, but the researchers concluded that the standards do not adequately address the joint shear problem. An improved retrofit design using longer dowels to develop more effective joint shear resisting mechanisms was proposed and verified. A strut-and-tie model with a yield line mechanism was developed to analyze the resisting mechanisms in the retrofitted footings.

Methods for retrofitting bridge foundations were the subject of a recent WSDOT study (McLean, et al, 1995). The focus of the research was on single-column bent bridges supported on either spread or pile-supported foundations. Tests were conducted on approximately 1/3-scale assemblages which incorporated details that were selected to represent deficiencies present in older bridges. The retrofit measures investigated included column jacketing, improving footing shear and flexural strengths, and increasing overturning resistance.

The specimens built to represent the as-built conditions performed poorly. The

foundations exhibited significant cracking due to inadequate shear strength, resulting in a rapid degradation in strength. The shear failures in the footings of the as-built specimens were a result of inadequate joint shear strength in the column/footing connection. The failures were relatively brittle and with little energy dissipation. Using the model proposed by Priestley (1991), the joint shear failures occurred at stress levels of between 5.2 to 5.5 $\sqrt{f'_c}$ psi, consistent with the distress level proposed with the model.

Retrofit measures were developed for improving the as-built substructure performance. A concrete overlay was added to the top of the footing to increase the shear strength. The overlay also allowed a top mat of reinforcement to be added to provide negative moment strength. Special detailing, consisting of a pedestal and/or cutting of the column reinforcement, was necessary in order to preserve the integrity of the lap splices present at the bases of the columns. Typical retrofit measures developed in the study are shown in Figure 1. All retrofitted specimens developed plastic hinging in the columns with a resulting ductile response under the simulated seismic loading. In specimens that were overturning critical, increased overturning resistance was provided by enlarging the footing plan size, providing additional piles, and/or providing footing tie-downs.

MULTI-COLUMN BENT RETROFITTING

The bridge analysis program NEABS was modified in previous WSDOT studies (Cofer, et al, 1994, Cofer, et al, 1997) to provide a method to include the effects of soil-structure interaction in bridge analysis and to include an elastic-plastic-softening column model. These modifications enabled the program to be used to evaluate the effectiveness of

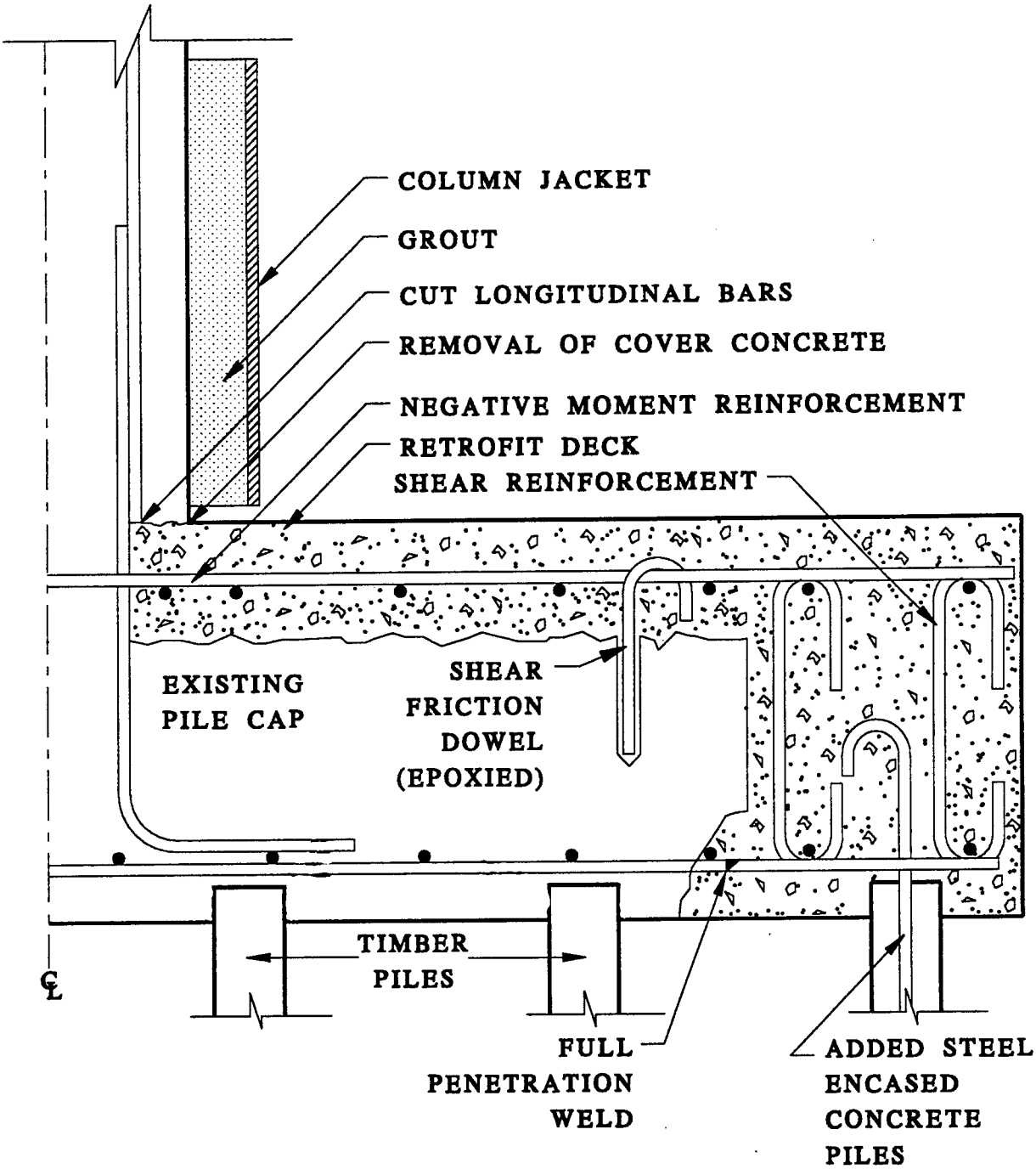

Figure 1 Substructure retrofit measures.

various column retrofit measures within multi-column bridges. Results (Cofer, et al, 1997) showed that both full and partial retrofit strategies are effective in improving the seismic response of multi-column bents. However, for some partial retrofitting strategies, the plastic hinge rotations and resulting damage of the unretrofitted columns were large. Further studies were recommended to investigate the ability of degraded hinge regions to transfer shear and axial forces.

Priestley, et al (1996) has proposed adding a stiff link beam as a retrofit measure for multi-column bents, as shown in Figure 2. Various different outcomes on bent performance can be achieved by constructing the beam at the top, mid-height, or bottoms of the columns. Figure 2(a) shows the link beam positioned at the mid-height of the bent, resulting in a doubling of the lateral strength of the bent, while the displacements of the bent are halved. Figure 3(b) shows the link beam at the top of the columns, having the effect of reducing the forces in the cap beam. Figure 3(c) shows the link beam just above the footings, forcing the plastic hinging into the columns above the link beam and drawing moment away from the footings, thus reducing the risk of damage and potentially eliminating the need to retrofit the footings. However, the addition of a link beam will stiffen the bent considerably, and the axial forces in the footings will increase by an amount equal to the shear force induced into the link beam.

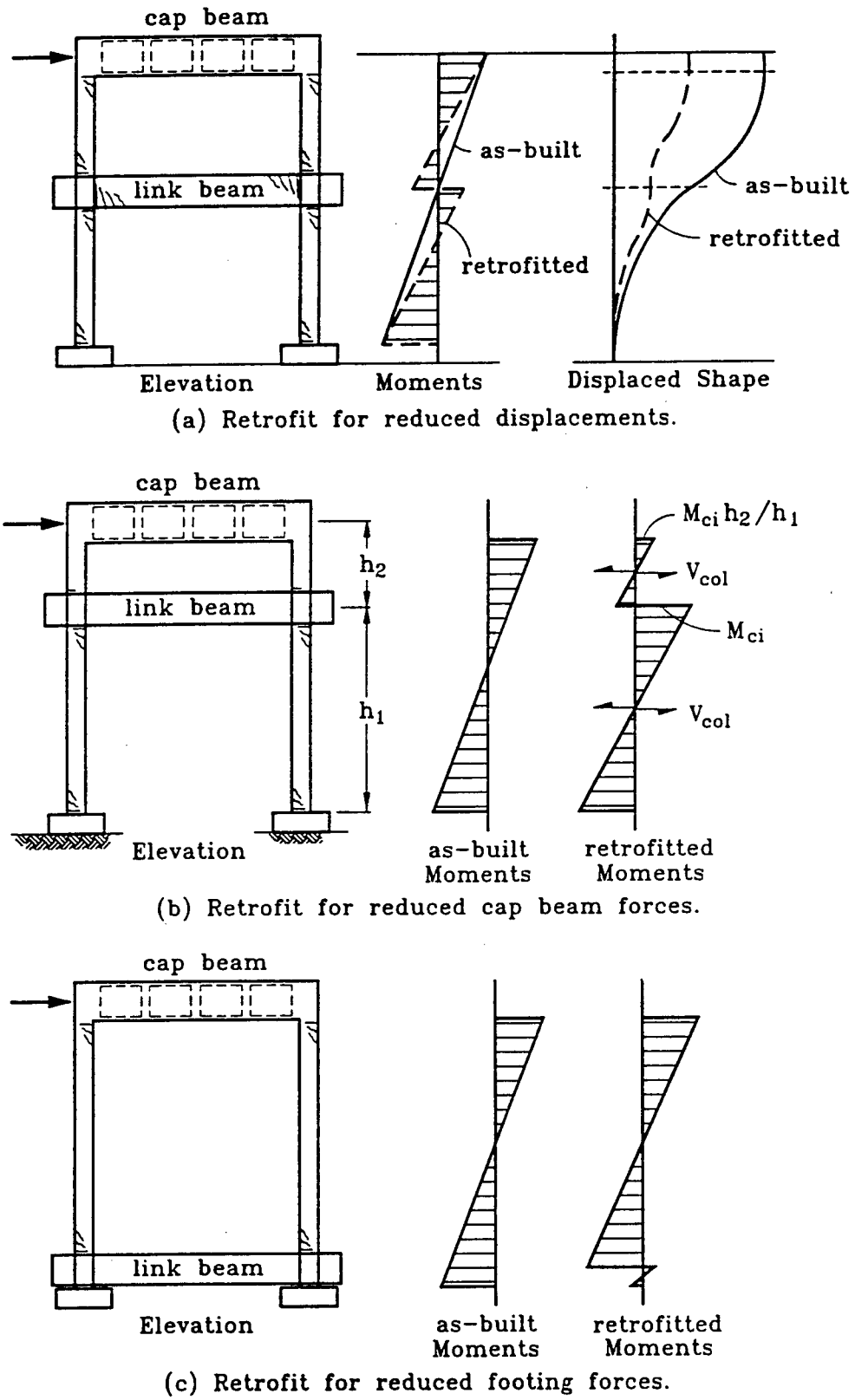

Figure 2 Link beam retrofit concept (from Priestley, et al, 1996).

EXPERIMENTAL TESTING PROGRAM

TEST SPECIMENS AND PARAMETERS

For this study, a section of a typical bridge bent consisting of three columns with spread footings was used as the basis for evaluating as-built and retrofitted substructure performance. The prototype three-column bent system was formulated by compiling design plans from the 1950's and 1960's for bridges in Washington State. The prototype parameters were selected to be representative of the design plans reviewed and do not represent any specific bridge.

The prototype three-column bent chosen for study consisted of three independent rectangular spread footings, each with plan dimensions of 3.7 m by 2.3 m (12 ft by 7.5 ft) and with a thickness of 0.8 m (2.6 ft). The columns were selected as 0.9 m (3 ft) in diameter with a height-to-diameter ratio of 9. The reinforcing ratios in the footing were selected as 0.47% and 0.20% for the longitudinal and transverse steel, respectively, and the column reinforcing ratio was selected as 1.75%. Transverse reinforcement in the columns consisted of No. 3 hoops at 0.3 m (12 in.) on center. Details included column lap splice lengths of 20 bar diameters (d_b) and 35 d_b. The columns were spaced at 4.1 m (13.5 ft) on center with a 1.2 m (48 in.) wide by 1.0 m (39 in.) deep cap beam between them. The flexural reinforcing ratio in the cap beam was 0.60%.

The experimental tests were conducted on 1:4.5 scale specimens which modeled the prototype dimensions, reinforcing ratios and arrangement, deficient detailing, and material properties. Typical details of the specimens representing the as-built conditions are shown in Figure 3. For ease of construction and test setup, steel box beams of approximately

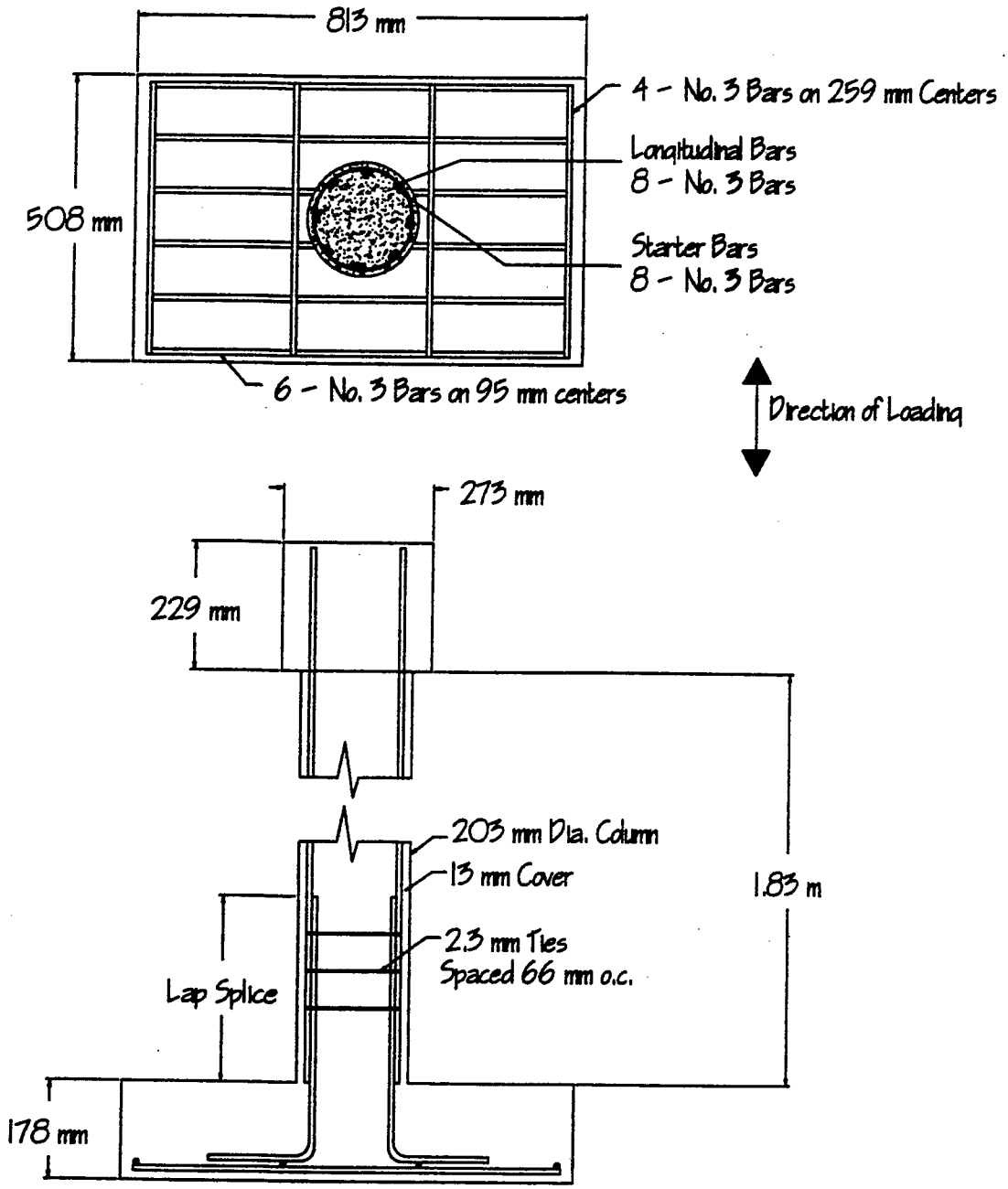

Figure 3 Details of Specimen No. 1 representing as-built conditions.

the same scaled stiffness as the cap beam were used to connect the columns together. Dimensions of the box beams were 10 cm x 20 cm x 1 cm (4 in. x 8 in. x ½ in.).

A summary of the test specimens is given in Table 1. Seven specimens were tested. Specimen No.s 1 and 2 were detailed to be representative of as-built conditions and incorporated lap splices at the column base of 35 d_b and 20 d_b, respectively. Specimen No. 3 included retrofit measures applied to all three columns and footings of the specimen, while Specimen No.s 4 and 5 included retrofit measures applied to only the two outer columns and footings and only the center column and footing, respectively. Specimen No. 6 was detailed to represent a bent with shear-critical columns, and retrofitting was applied to the two outer columns and footings. Specimen No. 7 incorporated a link beam just above the footings.

All column retrofitting consisted of steel jackets, 0.3 m long (12 in.), around the top and bottom hinging regions of the columns, except for the shear critical columns where full-height jacketing was used. A space of approximately 1 cm (0.4 in.) was provided between the jacket and column which was later filled with high strength grout. The footing retrofit consisted of adding a 0.1 m (4 in.) overlay on top of the existing footing. The overlay allowed for the addition of a mat of horizontal reinforcement to provide negative moment strength to the footing. Additional details of the retrofit measures are discussed along with the test results.

All specimens were constructed using concrete with a 28-day target compressive strength of 28 MPa (4000 psi). Grout used for the column retrofit jackets had a 28-day compressive strength of 48 MPa (7000 psi). Grade 40 reinforcement was used for the portions of the specimens representing the as-built structures. Grade 60 reinforcement was

Table 1 Summary of the Test Specimens

Specimen No.	Column Splice Length	Unretrofitted Column Height cm (in.)	Retrofit Strategy
1	35 d_b	183 (72)	as-built
2	20 d_b	183 (72)	as-built
3	35 d_b	183 (72)	all columns and footings
4	35 d_b	183 (72)	outer columns and footings
5	35 d_b	183 (72)	center column and footing
6	35 d_b	81 (32)	outer columns and footings
7	20 d_b	183 (72)	link beam

used for both the footing retrofits and in the link beam. The steel jacketing consisted of 10 gauge (3.4-mm (0.13-in.) thick) hot-rolled sheet metal with a yield strength of 248 MPa (36 ksi). A high modulus, low viscosity epoxy was used to anchor retrofit reinforcing dowels into existing concrete. Additional details of the testing program are given in Mealy (1997) and Kuebler (1997).

TEST SETUP AND PROCEDURES

The test specimens were supported directly on a concrete strong floor. The footings were not bolted to the floor, thus permitting the footings to rotate during testing. The overall test setup is shown in Figure 4 and in the photograph of Figure 5. The specimens were subjected to reversed cyclic lateral loading under a constant axial load of 45.3 kN (10.2 kips) applied externally to each of the columns. The applied axial load corresponds to

approximately 5% of the capacity of the columns in pure compression and represents the dead load carried by the bent. Three hydraulic jacks were used to apply the axial loads. A cross-beam and tension rod system was used to transfer the axial loads to the columns, with the tension rods anchored to the strong floor through slots formed into the footings. Note that, while the externally-applied axial loads remained constant until testing was stopped, the actual column axial loads varied during testing due to framing action and load redistribution once damage occurred. Lateral loads were applied using a horizontal actuator.

Since footing uplift and corresponding rotations occurred during testing, accurate values of the lateral displacements associated with first yielding in the system were difficult to obtain. Hence, incrementally increasing values of cyclic lateral displacements were input to the specimens to evaluate the ductility and hysteretic behavior of the test specimens. The loading pattern for the specimens consisted of three cycles at displacement levels of ±2.5 cm (1 in.) to ± 22.5 cm (9 in.), in 2.5 cm (1 in.) increments, unless failure occurred first. Failure was defined as fracture of the longitudinal reinforcement or a drop in lateral capacity to below 80% of the peak lateral load.

Strain gages were used to monitor the strains in the flexural and transverse reinforcement. Strain gages were also used to monitor strains in the steel cap beams and thus determine the forces present in the cap beams. From equilibrium requirements, the moments, shears and axial forces in each of the columns of the bent could be determined. A linear variable displacement transformers (LVDT) and a load cell were used to measure bent displacements and loads applied by the horizontal actuator. Lateral displacements and rotations in the footings were also monitored.

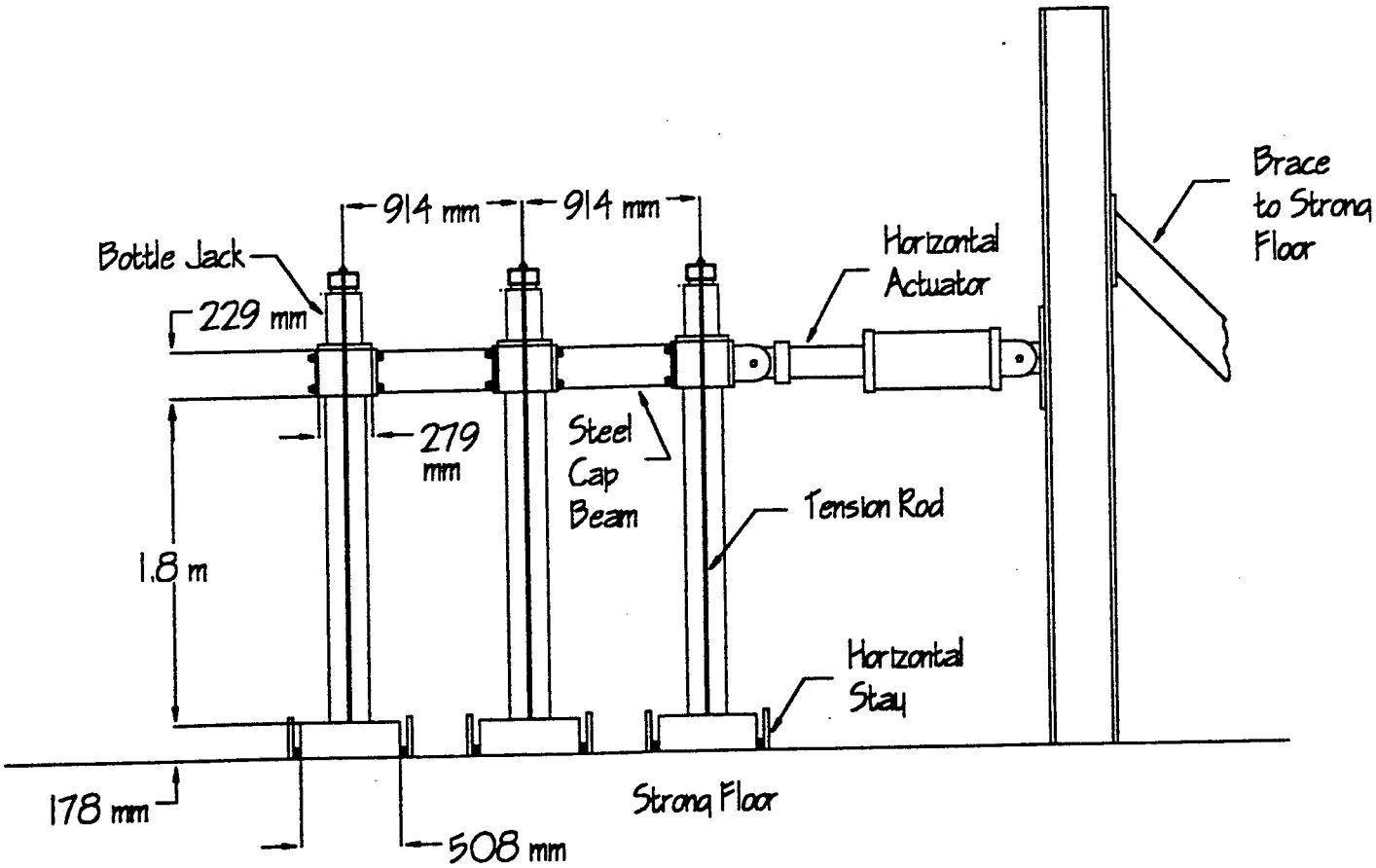

Figure 4 Testing setup.

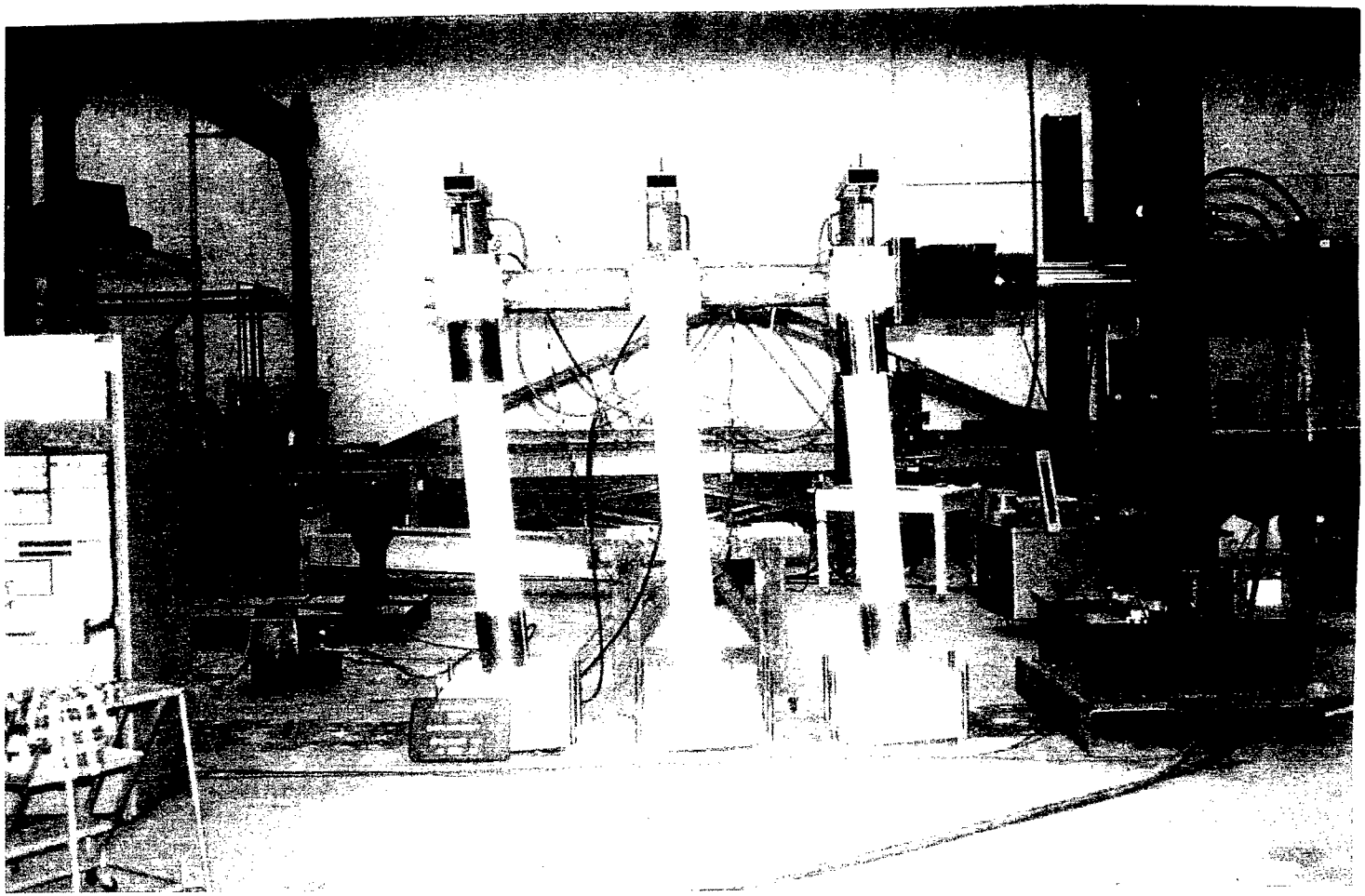

Figure 5 Photograph showing the test setup.

RESEARCH FINDINGS AND DISCUSSION

In this section, results of the experimental tests are summarized. Results from the specimens representing the as-built conditions, Specimen No.s 1 and 2, are presented first. These results were used to formulate the retrofit measures for the fully retrofitted specimen, Specimen No. 3. The results from these first three specimens were used as baselines for comparison with the subsequent partially retrofitted specimens (Specimen No.s 4 and 5), shear retrofit specimen (Specimen No. 6) and link beam retrofit specimen (Specimen No. 7). Specimen performance was evaluated on the basis of load capacity, displacement ductility, strength degradation and hysteretic behavior.

TESTS ON THE AS-BUILT SPECIMENS

Specimen No.s 1 and 2 were designed to be representative of as-built conditions including column reinforcement lap splices of 35 d_b and 20 d_b, respectively. The performance of these specimens was intended as the basis for designing and evaluating retrofit methods for the subsequent specimens. No significant difference in behavior in the two specimens was observed during testing.

General Behavior and Failure Mechanism

Failure in both specimens occurred during loading to a displacement level of 12.5 cm (5 in.). The bent lateral load vs. displacement hysteresis curves for Specimen No. 2 are shown in Figure 6 and indicate moderate energy dissipation. The peak lateral load was 49.4 kN (11.1 kips) and occurred at a bent lateral displacement of approximately 7.5 cm (3 in.).

The specimen exhibited a slight decrease in applied lateral load with each loading cycle until the third cycle at 12.5 cm (5 in.), at which time the load dropped below 80% of the peak load.

Two major damage mechanisms were observed in both the as-built specimens. During loading to the 5 cm (2 in.) displacement level, cracks developed in the footings radiating outward from the column, in directions both perpendicular to and in line with the load. By the end of the test, all of the footings were severely cracked, as shown in Figure 7. Through careful examination of the cracking patterns in the footings, and from experience with similar damage observed in the footings of single-column bent specimens (McLean, et al, 1995; Xiao, et al, 1994), it was concluded that the damage was a result of joint shear distress in the column/footing connection. Principal tension stress values within the joint region were calculated using the approach suggested by Priestley (1991) for assessing joint shear and were found to exceed the recommended allowable stress values, supporting the conclusion that a joint shear failure in column/footing connection was the failure mechanism.

The second damage mechanism observed in the tests was the degradation of the hinging regions in the columns. Since the footings experienced cracking and rotated during testing, no damage or plastic hinge formation occurred at the bottoms of the columns. Significant flexural cracking occurred at the tops of the columns during loading to the 2.5 cm (1 in.) displacement level. Spalling of the cover concrete in the top hinging regions occurred at approximately 7.5 cm (3 in.) displacements. Due to lack of proper confinement, the longitudinal reinforcement began to buckle within the plastic hinge regions, beginning at a displacement level of 10 cm (4 in.). This led to degradation of the concrete core, as shown in Figure 8, and eventual failure of the specimens.

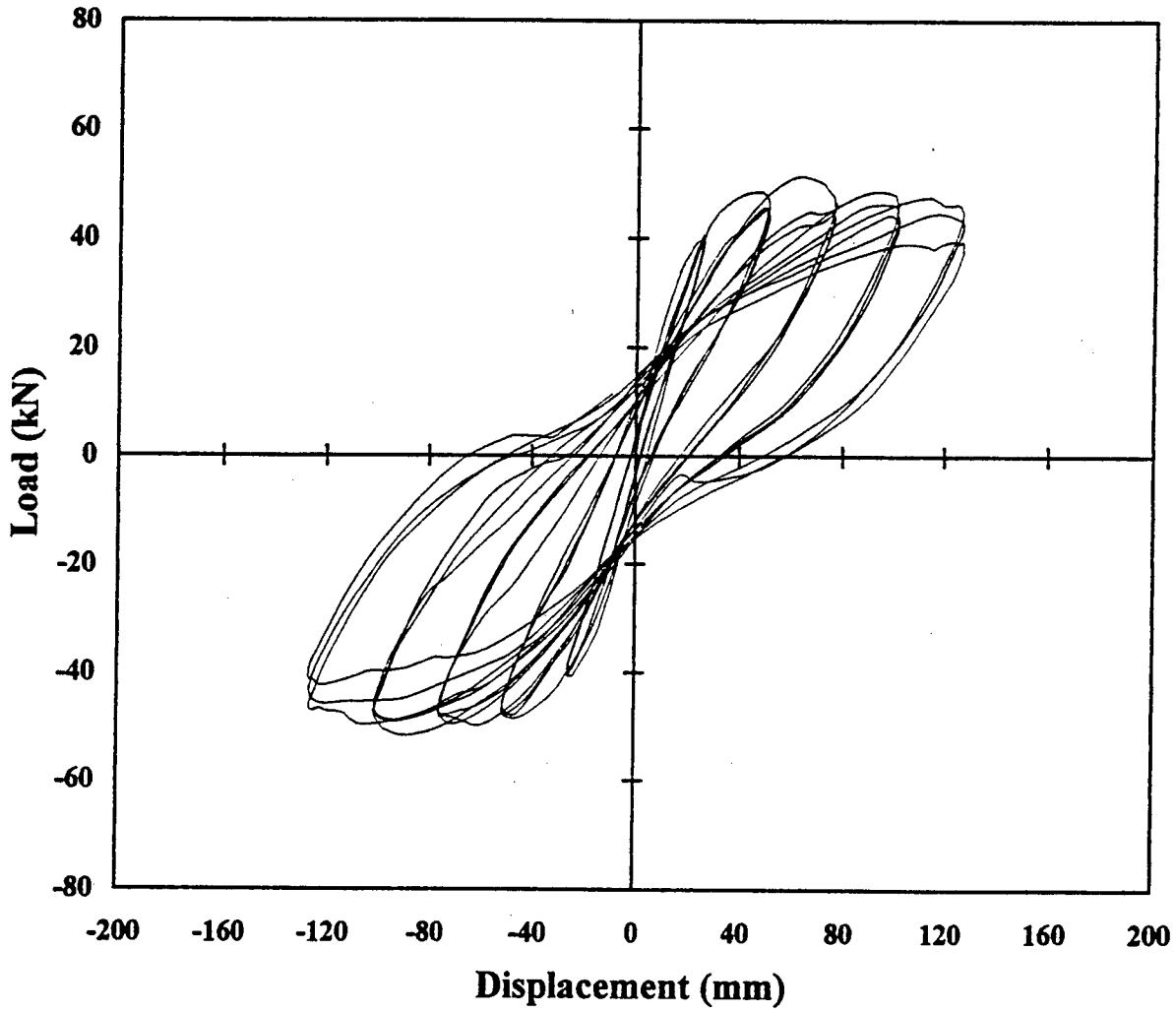

Figure 6 Load-displacement curves for Specimen No. 2.

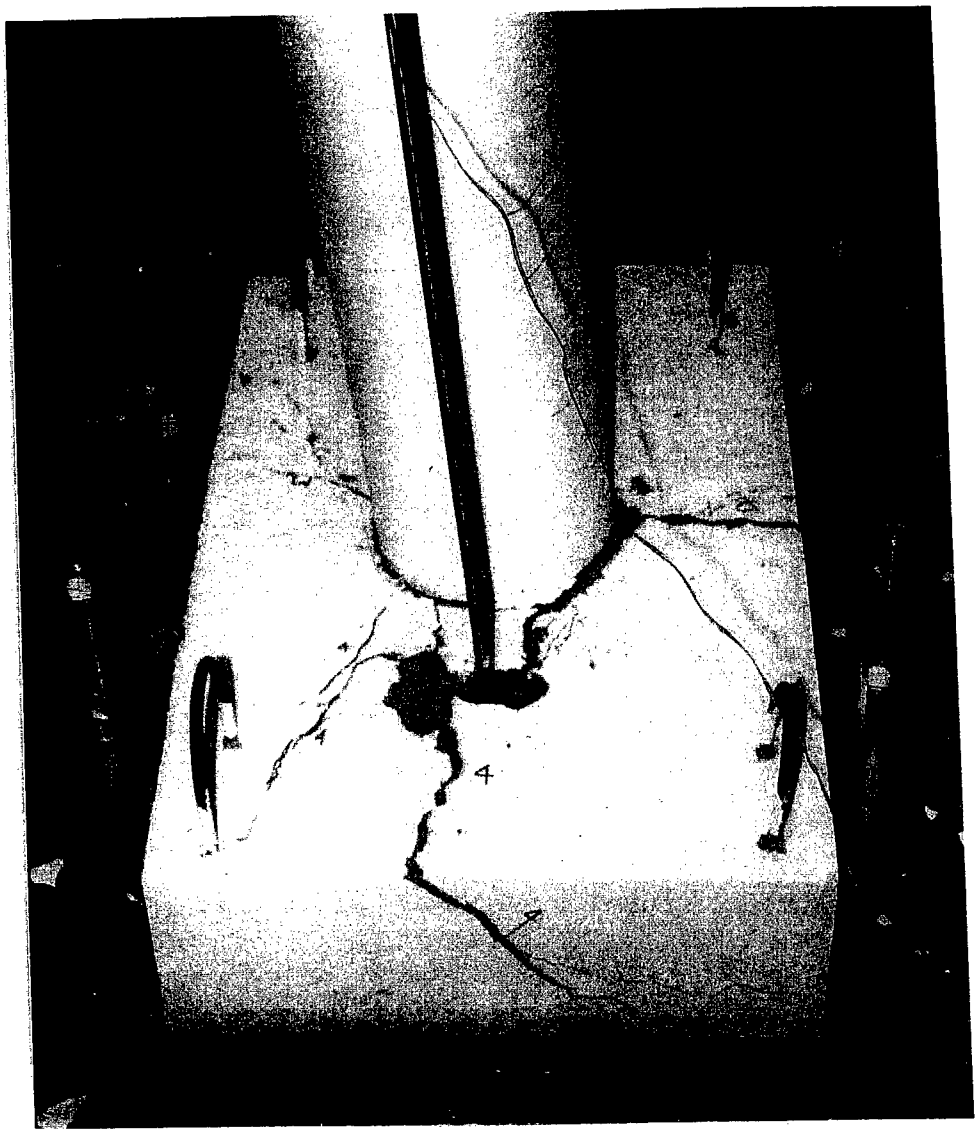

Figure 7 Cracking in the footings of Specimen No. 2.

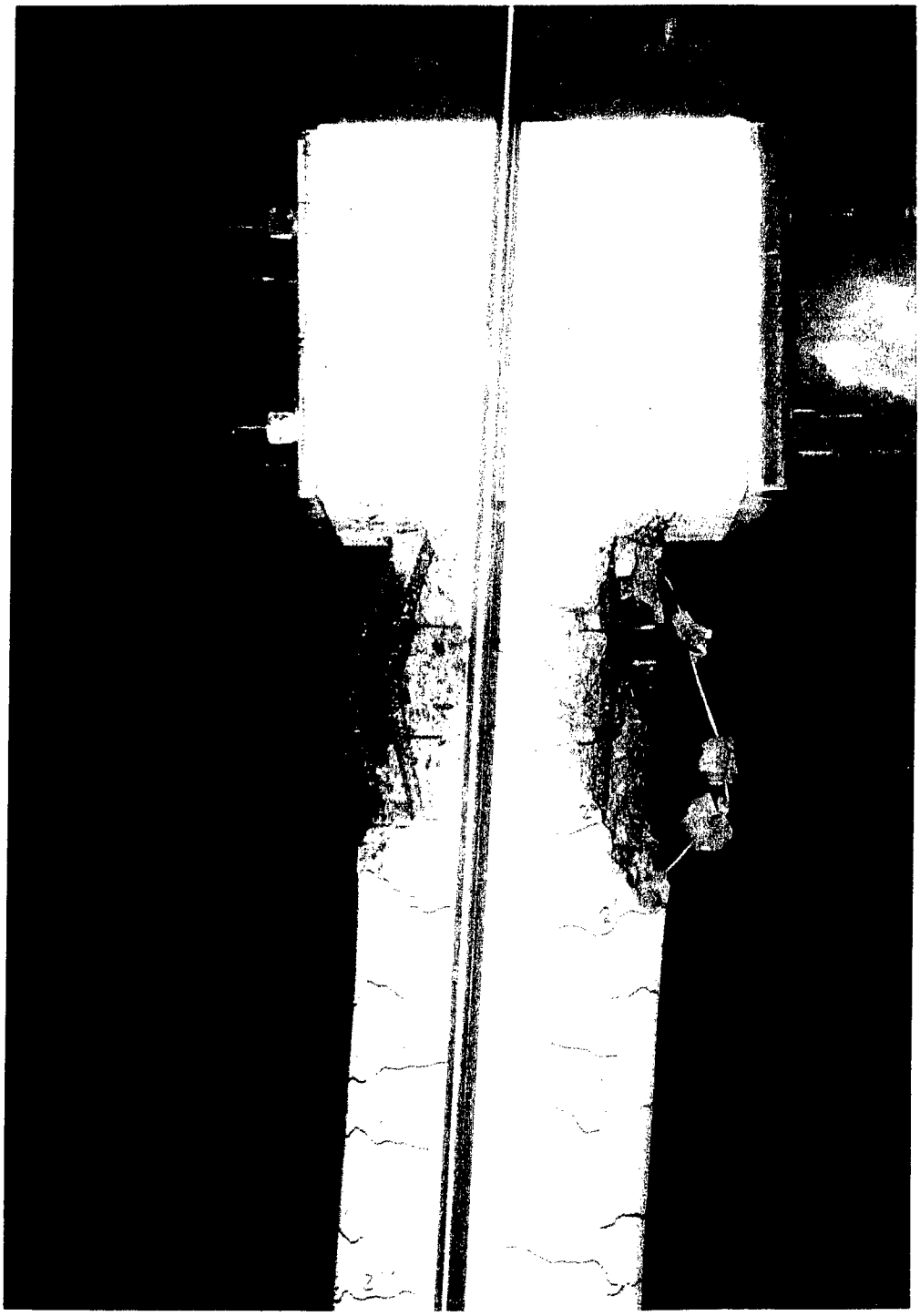

Figure 8 Damage in the top hinge regions of the columns of Specimen No. 2.

TEST ON THE FULLY RETROFITTED SPECIMEN

Specimen No. 3 was detailed and constructed similarly to Specimen No.1 and later retrofitted. The column hinge regions for all three columns and all three footings were retrofitted using procedures developed previously for single-column bent bridges (McLean, et al, 1995). The improvements in performance resulting from retrofit measures applied to all of the substructure elements were intended as an upper bound reference when evaluating the improvements from partial retrofitting of subsequent specimens.

Retrofit Description

The overall thickness of the spread footings was increased by adding a reinforced concrete overlay on top of the existing footings. The overlay was designed to act compositely with the existing footing by providing dowels. The dowels were designed using shear friction theory, and were drilled and epoxied into the top of the existing footing. The ends of the dowels were anchored into the retrofit overlay with 180° hooks. The overlay allowed for the addition of a mat of horizontal reinforcement, thus providing negative moment strength to the footing. The amount of top reinforcement added was equivalent to that present in the bottom of the existing footing. The thickness of the overlay was selected to produce joint shear stresses below the limit proposed by Priestley (1991) and to allow for development of the shear friction dowels. An overlay thickness of 10 cm (4 in.) was used in the retrofitted footings.

With a lap splice of 35 d_b present in the columns of Specimen No. 3, special detailing was required. The overlay would intersect the splice at 10 cm (4 in.) or 10 d_b from the

bottom of the splice, leaving a 25 d_b lap splice above the overlay. Previous research (Chai, et al, 1991) has shown that a lap splice length of 20 d_b can fully develop the reinforcement if proper confinement is present. However, to maintain the original column strength and stiffness, the column longitudinal bars were cut at the top of the overlay prior to pouring the retrofit. The column cover over the full height of the overlay was removed prior to construction of the retrofit overlay. This was done to enable composite action and load transfer between the column and the overlay. The column retrofit jacket was still required to provide confinement in the new plastic hinge region, now located above the overlay, due to inadequate transverse reinforcement present in the as-built columns. Figure 9 shows the retrofit measures applied to those elements that were retrofitted.

Test Results

Failure in Specimen No. 3 occurred during loading to a displacement level of 20 cm (8 in.). The resulting lateral load vs. displacement hysteresis curves for this specimen are shown in Figure 10. The peak lateral load was 55.2 kN (12.4 kips) and occurred at a lateral displacement of approximately 12.5 cm (5 in.). The hysteresis curves exhibit good energy dissipation and stability through relatively large displacement levels.

During testing, all three retrofitted columns developed minor flexural cracking just below the jackets in the upper hinge regions. The retrofitted footings rotated, resulting in some pinching of the hysteresis curves, but did not develop any significant cracking. A photograph of Specimen No. 3 during testing is shown in Figure 11. Failure occurred in the specimen due to a longitudinal column bar fracturing within the retrofitted top hinging region

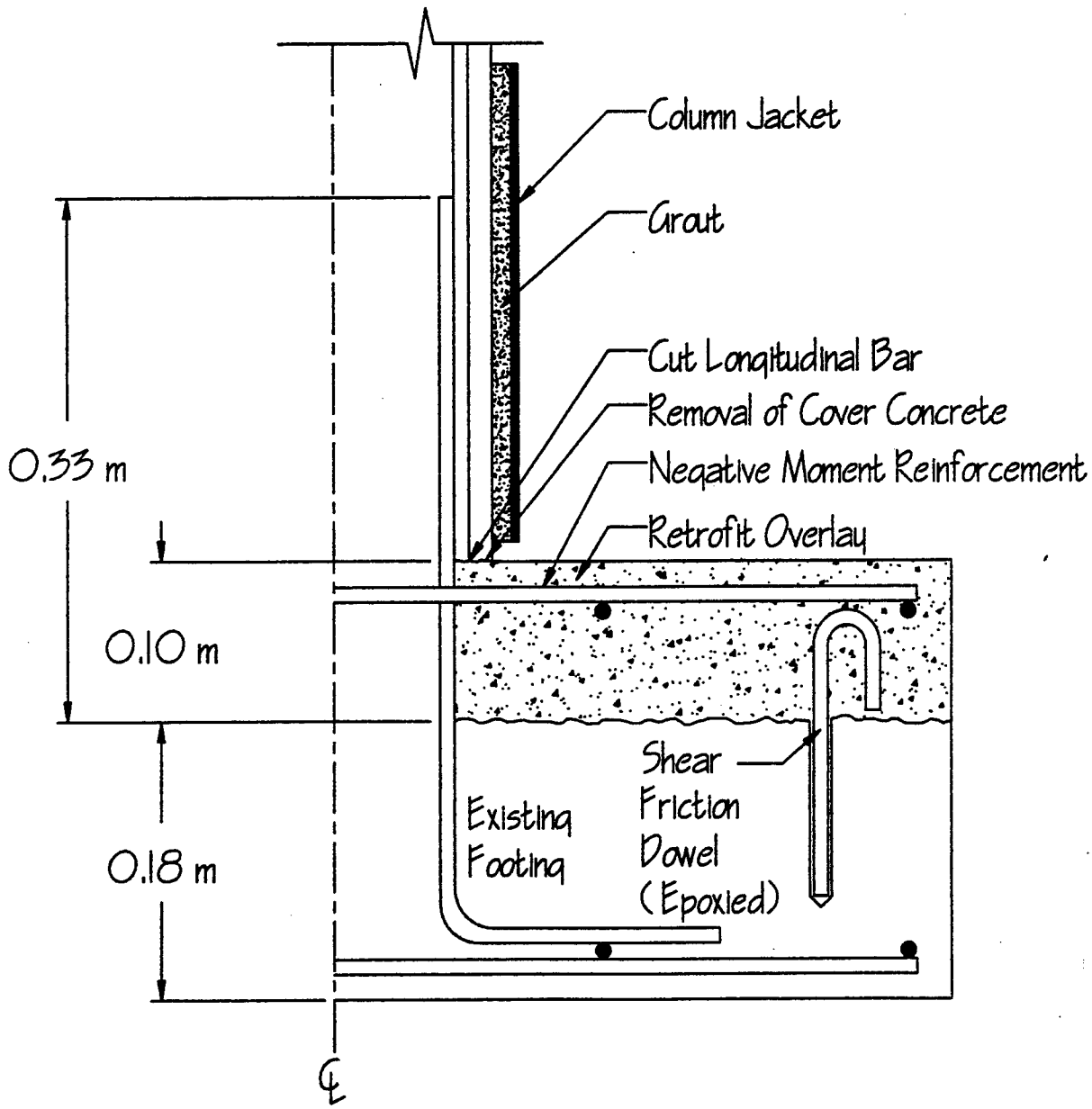

Figure 9 Retrofit scheme applied to Specimen No. 3.

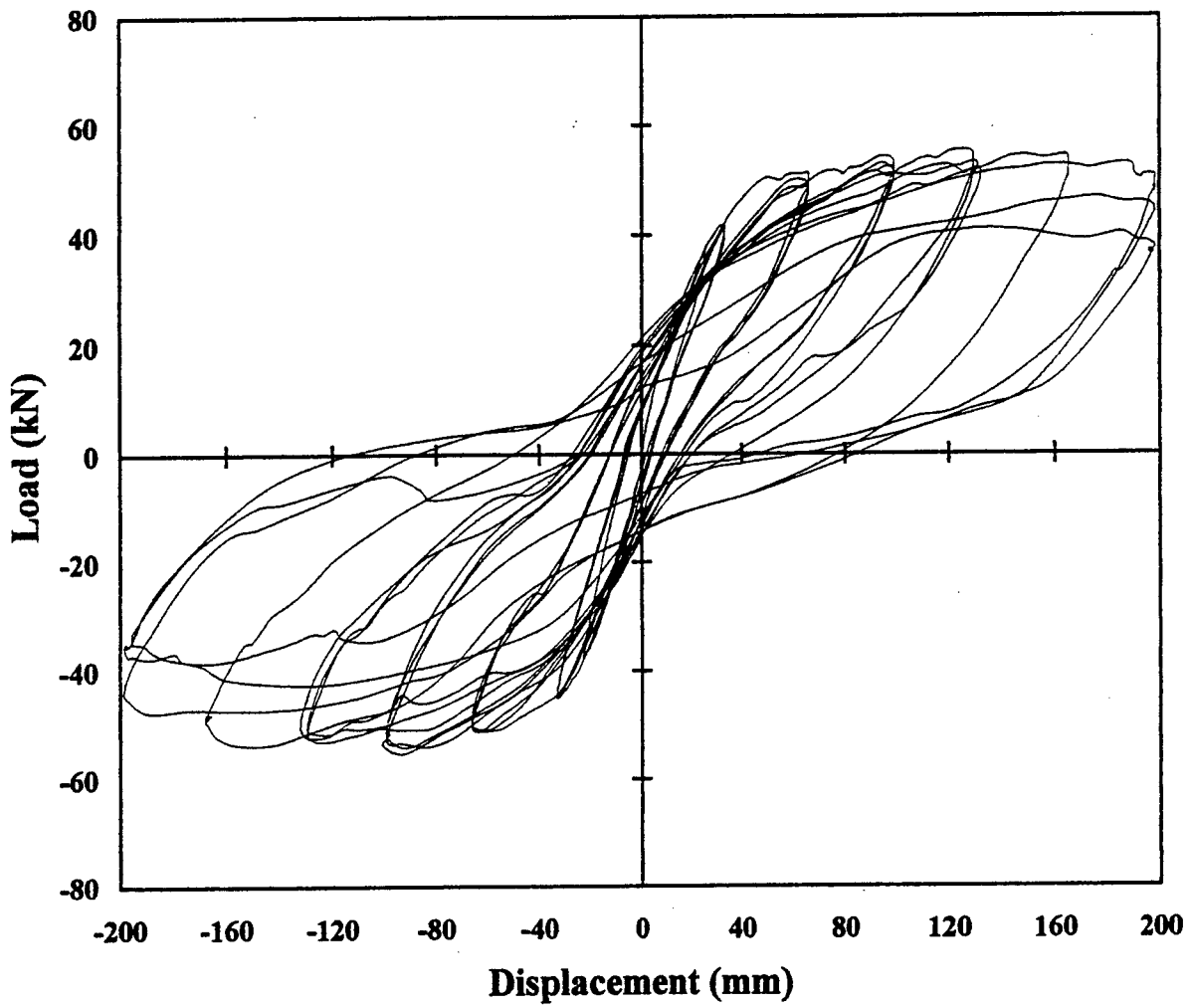

Figure 10 Load-displacement curves for Specimen No. 3.

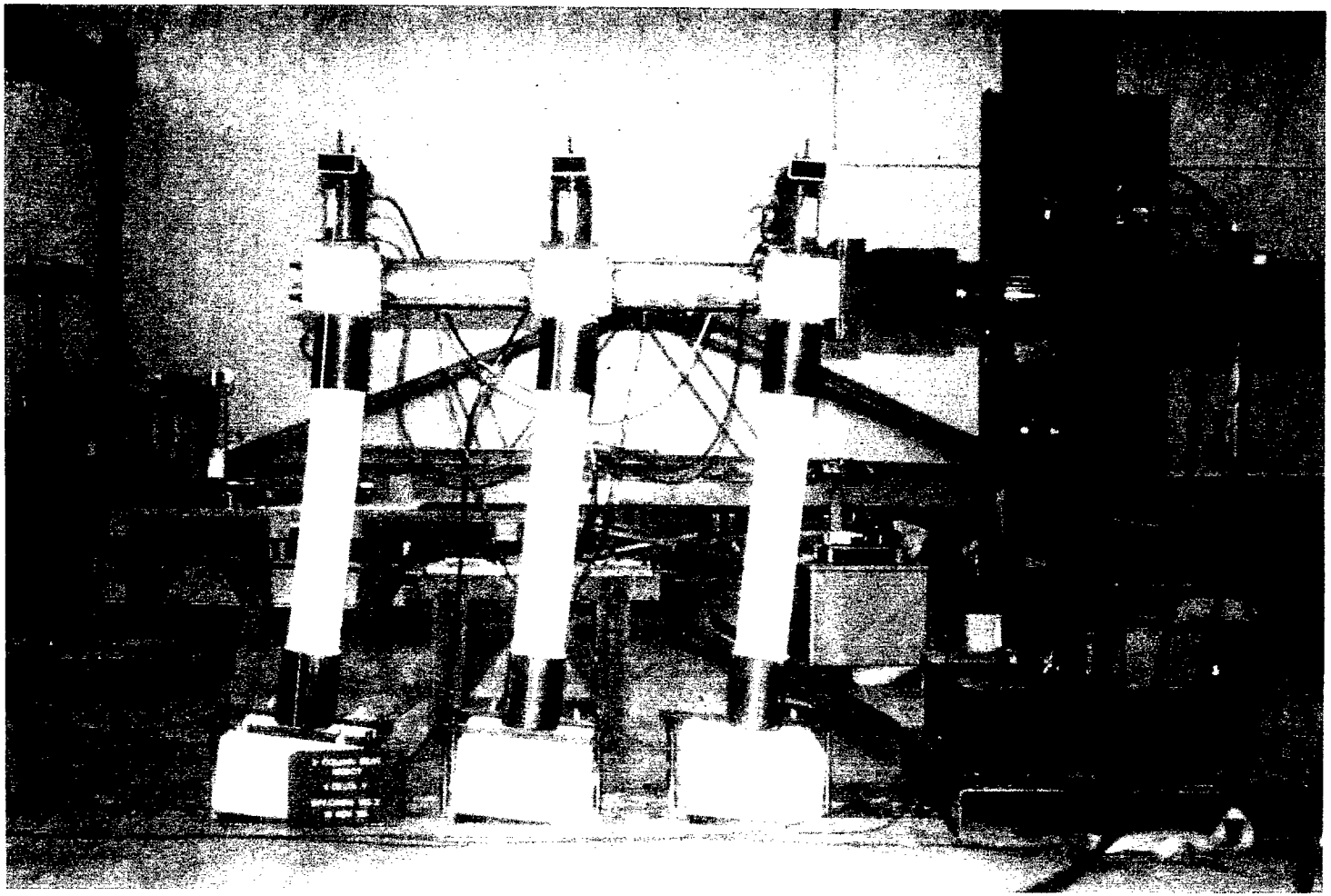

Figure 11 Specimen No. 3 during testing.

during cycling at 20 cm (8 in.) of displacement. The retrofit of the substructure elements was effective in preventing the failure mechanisms observed in the as-built specimen tests. The load-displacement characteristics and overall performance of the bent were significantly improved due to the retrofitting.

TESTS ON THE PARTIALLY RETROFITTED SPECIMENS

Specimen No.s 4 and 5 were detailed and constructed similarly to Specimen No. 1, except that retrofit measures were applied to only some of the substructure elements. For Specimen No. 4, only the two outer columns and footings were retrofitted, while for Specimen No. 5, only the center column was retrofitted. The retrofit measures applied to the selected columns and footings were the same as those used for the fully retrofitted Specimen No. 3.

Test Results

Specimen No. 4 performed well up to a displacement level of 15 cm (6 in.), at which time the lateral load capacity began to drop. The lateral load vs. displacement hysteresis curves for this specimen are shown in Figure 12. The peak lateral load was 52.0 kN (11.7 kips) and occurred at a displacement of 10 cm (4 in.).

The retrofitted columns and footings of Specimen No. 4 performed well, maintaining their plastic moments through large levels of displacements, with eventual longitudinal column bar fracture due to low cycle fatigue during loading at the 20 cm (8 in.) displacement level. Cracking began at the top of the unretrofitted column while being loaded to 2.5 cm (1 in.)

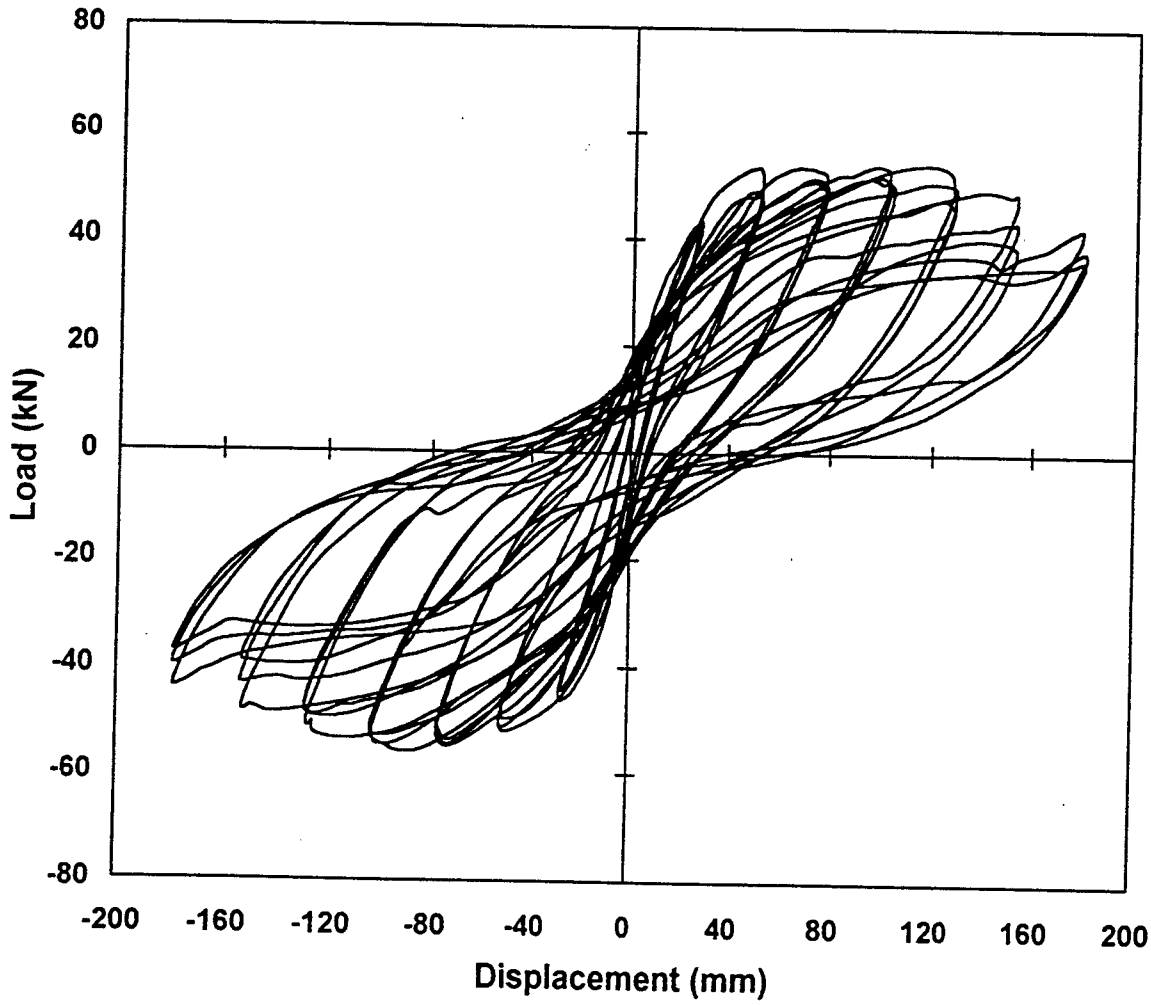

Figure 12 Load-displacement curves for Specimen No. 4.

displacements. Spalling and longitudinal bar buckling developed in the top hinging region during the 10 cm (4 in.) loading cycles, with rapid degradation thereafter. With continued cycling, the top hinge region of the center column lost nearly all of the concrete within the core. However, the axial load applied to the center column was transferred to the outer columns by the cap beam, as is shown in the column axial load envelope curves for the three columns of the specimen in Figure 13. No cracking was observed in any of the footings.

Specimen No. 5 performed well up to a displacement of 12.5 cm (5 in.). During the third cycle to 12.5 cm (5 in.) of displacement, lateral load capacity began to drop significantly. The lateral load vs. displacement hysteresis curves for this specimen are shown in Figure 14. The peak lateral load was 51.2 kN (11.5 kips) and occurred at a displacement of 7.5 cm (3 in.).

The unretrofitted outer columns developed significant flexural cracking at a displacement level of 5 cm (2 in.). Cracking indicative of joint shear distress occurred in the unretrofitted footings at approximately 7.5 cm (3 in.) of displacement. While cycling at the 10 cm (4 in.) displacement level, the longitudinal reinforcement in the top hinging region of the outer columns began to buckle, with rapid degradation thereafter. The retrofitted center column and footing behaved well, with eventual longitudinal column bar fracture due to low-cycle fatigue occurring during cycling to 20 cm (8 in.) displacements. After damage to the outer columns occurred, axial loads were transferred from the outer columns to the center column through the cap beam.

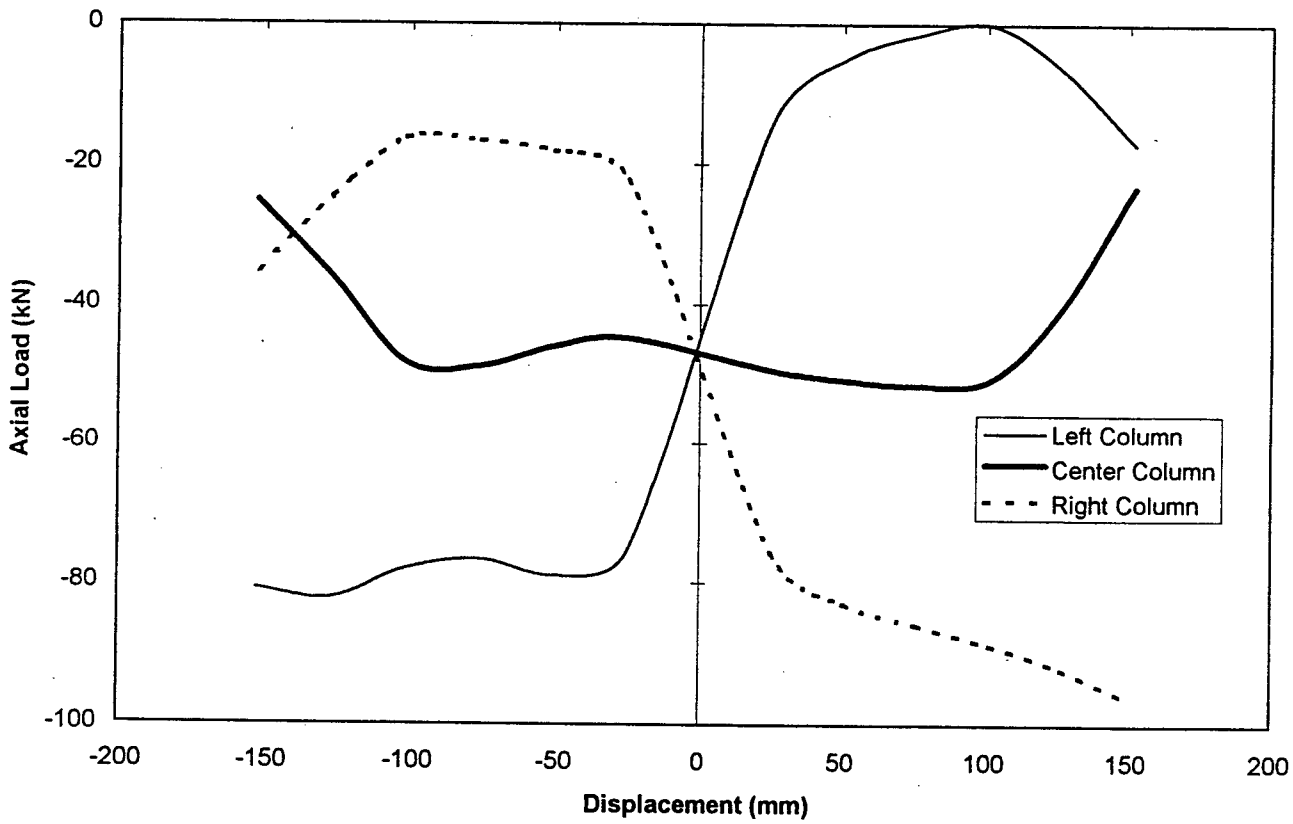

Figure 13 Envelopes of the applied axial loads for the columns of Specimen No. 4.

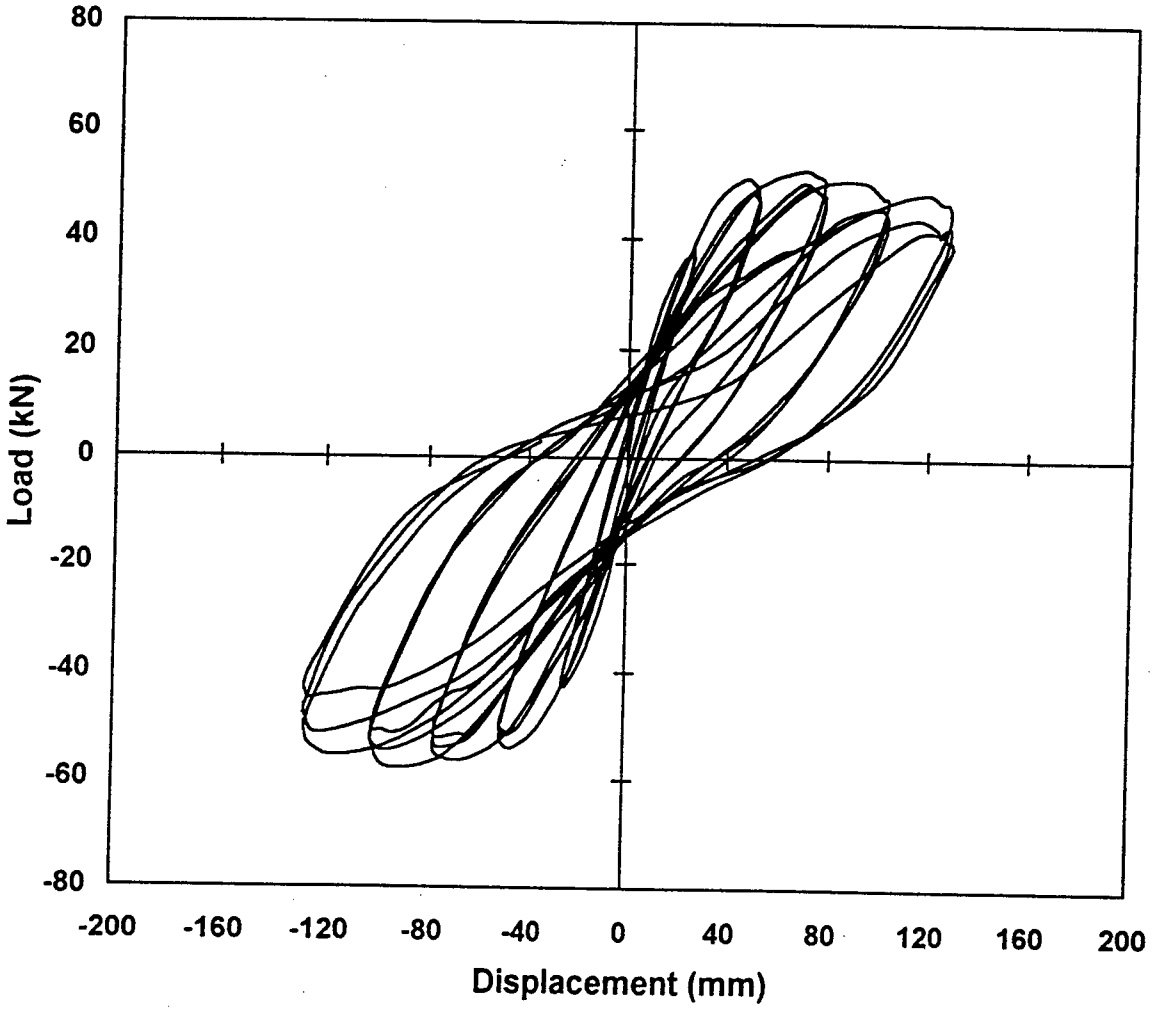

Figure 14 Load-displacement curves for Specimen No. 5.

TEST ON SHEAR RETROFITTED SPECIMEN

Specimen No. 6 was constructed and detailed similarly to Specimen No. 1, except with a reduced column height of 81 cm (32 in.) to create a shear-critical bent. The outer columns were retrofitted with full-height steel jacketing and the outer footings were retrofitted using the same procedures discussed previously.

Test Results

Failure in Specimen No. 6 occurred during loading to a displacement level of 6.3 cm (2.5 in.). The resulting lateral load vs. displacement hysteresis curves are shown in Figure 15. The peak lateral load applied to the system was 102 kN (23 kips) and occurred at a lateral displacement of approximately 5 cm (2 in.). The overall shape of the hysteresis loops indicates good energy dissipation and stability up until failure occurred.

While loading the system to a displacement level of 1.2 cm (0.5 in.), horizontal (flexural) and inclined (shear) cracks were observed in the top hinging region of the unretrofitted center column. During loading to a displacement level of 7.5 cm (1.5 in.), the shear cracks increased in size. The top hinge region eventually failed in shear, resulting in a significant drop in load-carrying capacity of the bent, at a displacement level of 12.3 cm (2.5 in.). The maximum value of applied shear in the center column was 39 kN (8.8 kips). The retrofitted outer columns continued to carry load even after the center column completely failed and lost all of its core concrete. No cracks were observed in the footings during testing. A photograph of Specimen No. 6 during testing along with a closeup of the damage in the center column are shown in Figure 16.

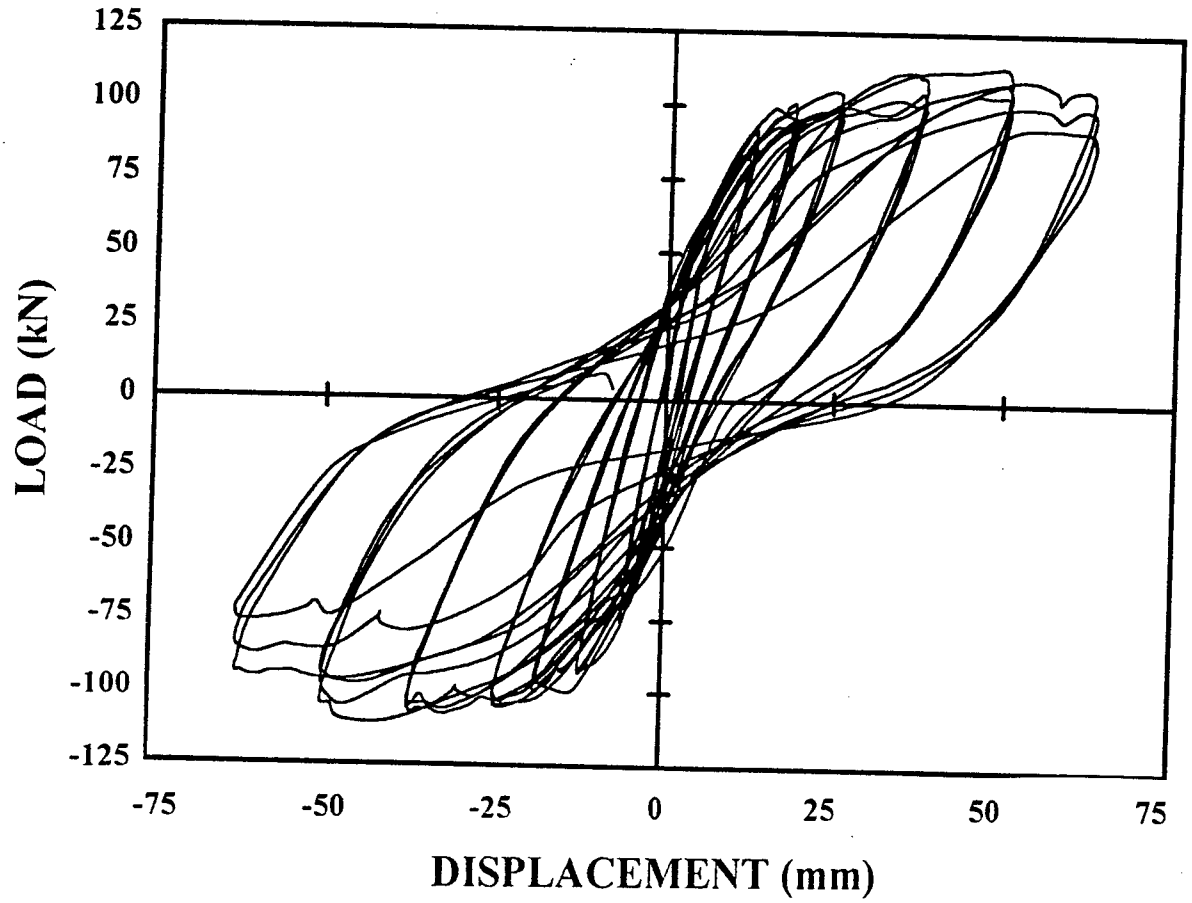

Figure 15 Load-displacement curves for Specimen No. 6.

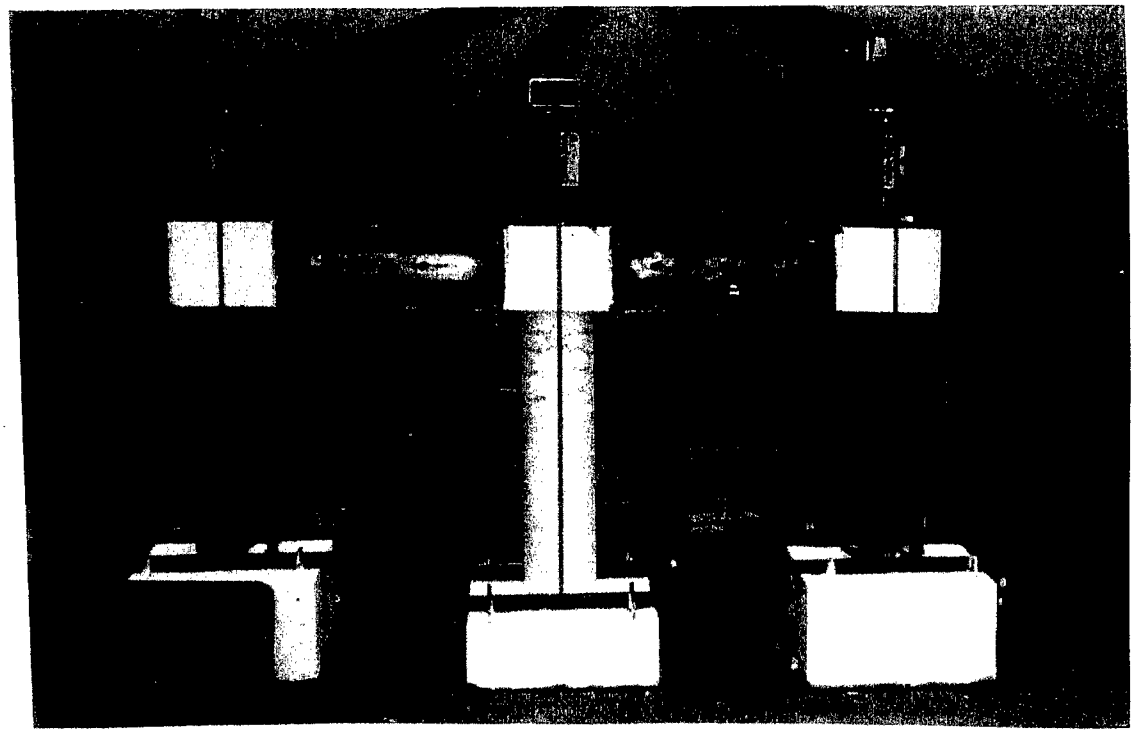

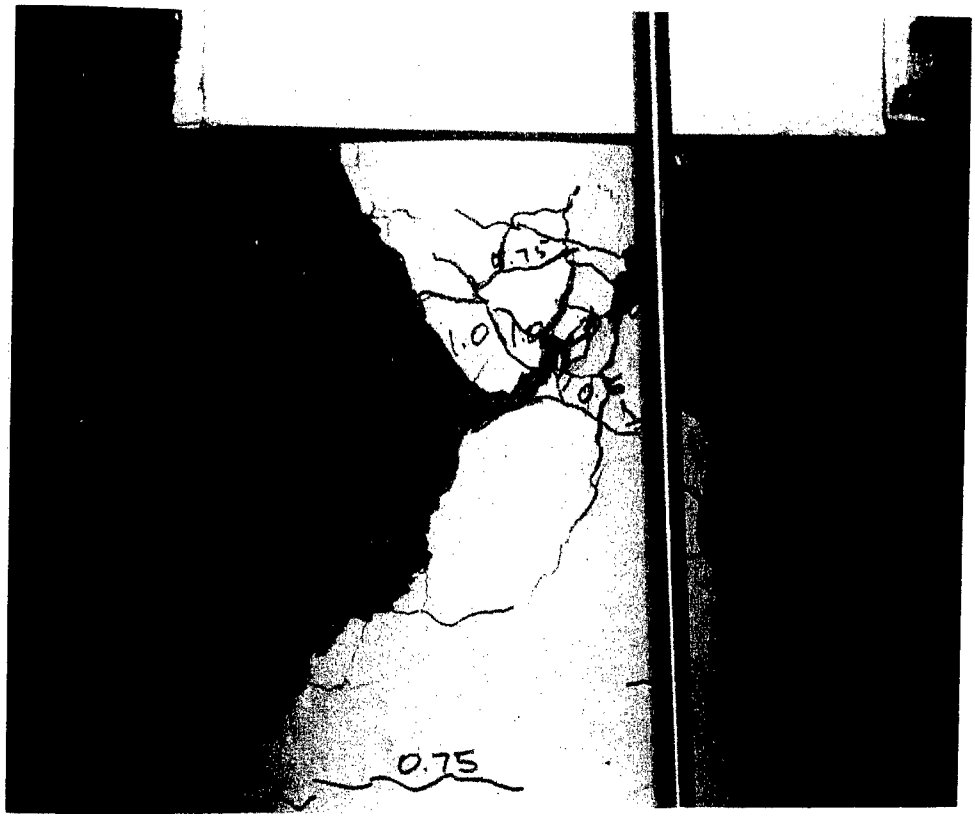

Figure 16 Photographs of Specimen No. 6 during testing.

TEST ON LINK BEAM RETROFITTED SPECIMEN

Specimen No. 7 was detailed and constructed similarly to Specimen No. 2. However, a 30 cm x 30 cm (12 in. x 12 in.) reinforced concrete link beam was added to the bent just above the footings as the only retrofitting applied to the bent. The beam was designed to be relatively stiff when compared to stiffness of the columns in order to reduce moment transfer into the footings and thereby eliminate the need to retrofit the footings.

Retrofit Description

The cross-section and amount of reinforcement in the link beam were chosen such that the link beam would be stronger and stiffer than the columns. The beam was sized to be slightly larger than the column diameter, and the flexural reinforcement provided consisted of 12 No. 3 bars distributed around the perimeter of the beam. Shear reinforcement consisted of 9 gage (4-mm (0.15-in.) diameter) wire spaced at 15 cm (6 in.) on center. Additional transverse reinforcement was provided in the joint regions where the link beam connected to the columns. In the construction of the beam, the cover concrete of the columns was removed to provide a positive connection between the columns and the link beam. Also, a gap of roughly 2 cm (0.75 in.) was provided between the top of the footings and the bottom of the beam. This was provided in order to prevent contact between the link beam and footings during testing that would result in moment transfer into the footings. Figure 17 shows the details of the link beam retrofit.

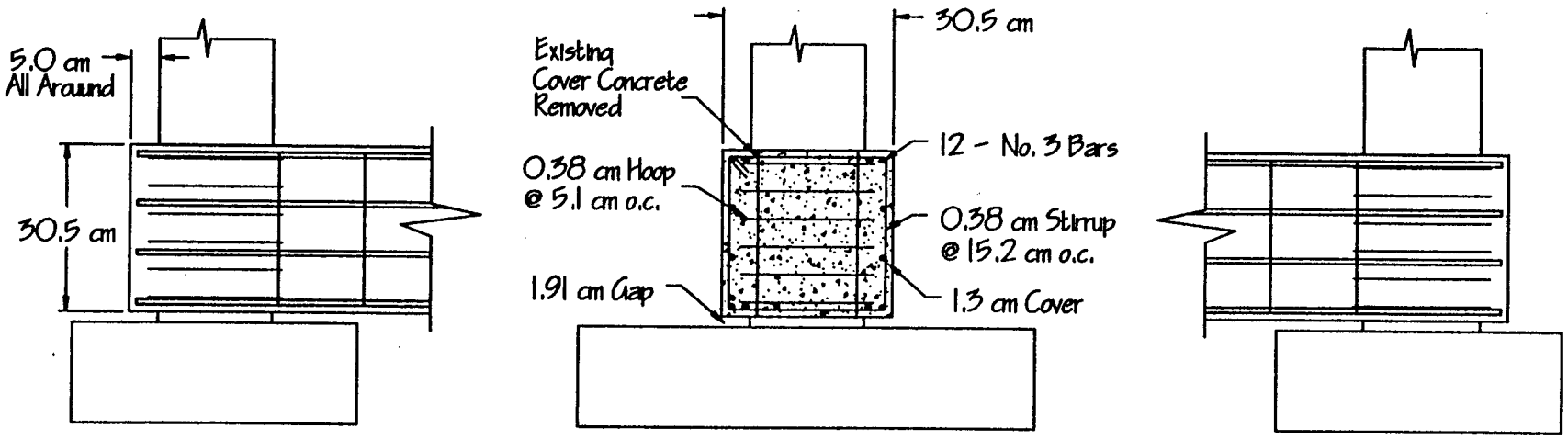

Figure 17 Details of the link beam retrofit.

Test Results

Failure in Specimen No. 7 occurred during loading to a displacement level of 10 cm (4 in.). The system load-displacement curves for this specimen are shown in Figure 18. The overall shape of the loops indicates good energy dissipation and stability up until failure occurred. The peak lateral load applied to the bent was 18.1 kips and occurred at a lateral displacement of approximately 7.6 cm (3 in.). Due to the shorter effective column length, a stiffer response and greater lateral load capacity resulted in Specimen No. 7 when compared to the behavior obtained for other specimens with similar unretrofitted column heights.

The addition of the link beam resulted in plastic hinges forming in both the top and bottom regions of the columns. During loading to a displacement level of 7.6 cm (3 in.), significant concrete spalling occurred followed by longitudinal bar buckling within the hinging regions. No footing rotation or cracking was observed in the footings during the test. Some minor cracking occurred in the link beam around the column/beam joint. A photograph of Specimen No. 7 towards the end of testing is shown in Figure 19.

The link beam retrofit was effective in preventing damage to the footings during testing. Because no column jacketing was used, failure was caused by degradation within the unretrofitted plastic hinging regions. Based on experience with the previous tests with jacketed columns, it would be expected that, had column jacketing been used, the response of the specimen with the link beam retrofit would have been improved even further.

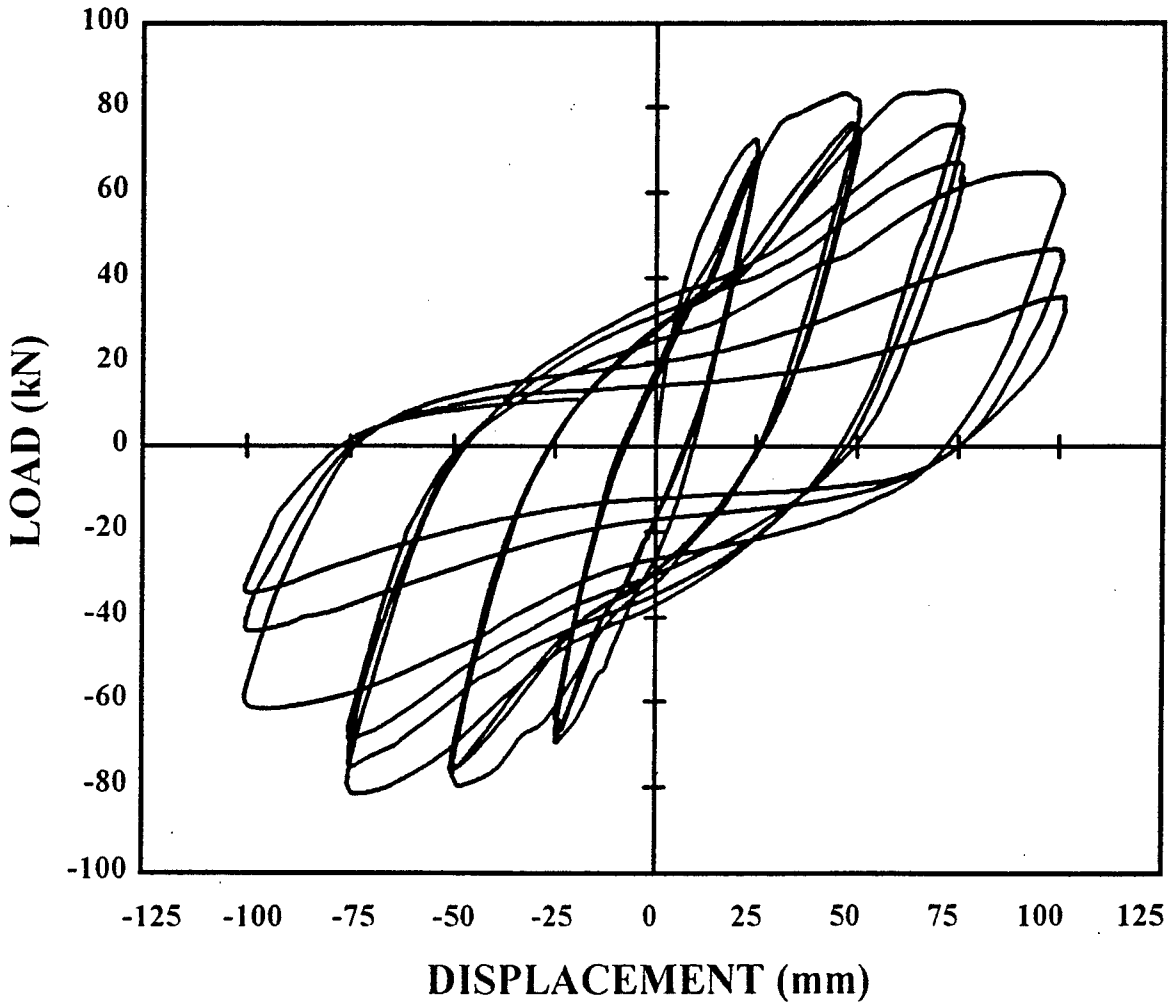

Figure 18 Load-displacement curves for Specimen No. 7.

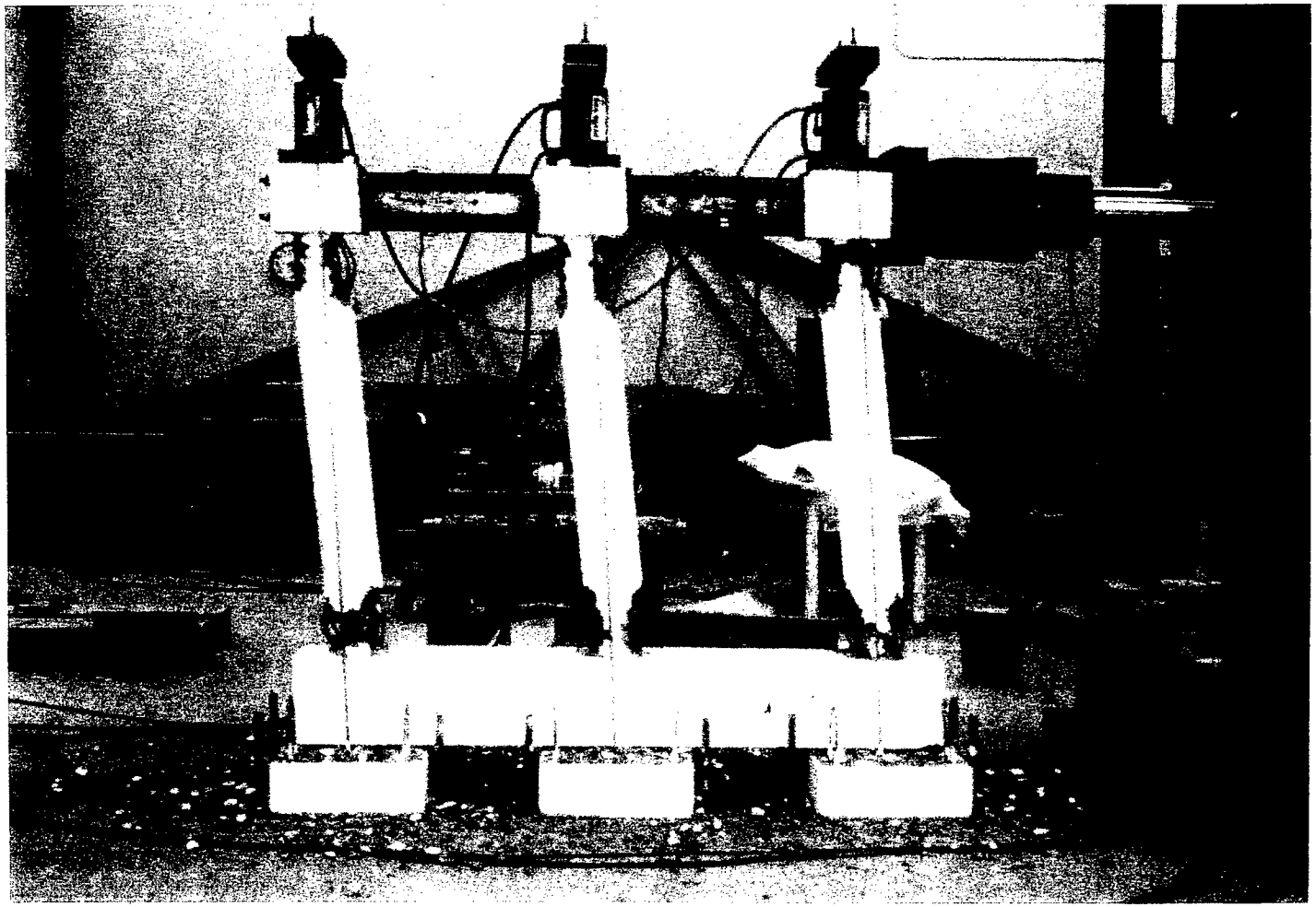

Figure 19 Photograph of Specimen No. 7 during testing.

COMPARISON OF OVERALL SPECIMEN PERFORMANCE

Load vs. Displacement Response

The load vs. displacement envelopes for the as-built specimens (Specimen No.s 1 and 2), fully-retrofitted specimen (Specimen No. 3) and the partially-retrofitted specimens (Specimen No.s 4 and 5) are shown in Figure 20. Only the first quadrant of the envelopes is plotted for clarity. Results for Specimen No.s 6 and 7 are not included because of having different effective column heights along with different retrofit measures.

The curve for the case when all substructure elements are retrofitted establishes the upper bound on the response. The envelopes for the two as-built specimens set the lower bound on the response. Comparing the fully retrofitted and as-built specimen performance, it can be seen that the peak load is slightly increased while the displacement capacity is significantly increased as a result of the retrofitting. The envelopes for the specimens with only some of the elements retrofitted lie between those for the fully retrofitted and as-built specimens. The observed improvements in performance of a retrofitted bent are largely incremental with the number of elements retrofitted.

Energy Dissipation

A plot comparing the areas within the first cycles of the load vs. displacement hysteresis curves for all of the specimens of this study is shown in Figure 21. The areas within the curves are related to the energy dissipation capability of the specimen. In order to account for columns of different heights, the areas are plotted against column drift ratio (lateral bent displacement divided by the column height).

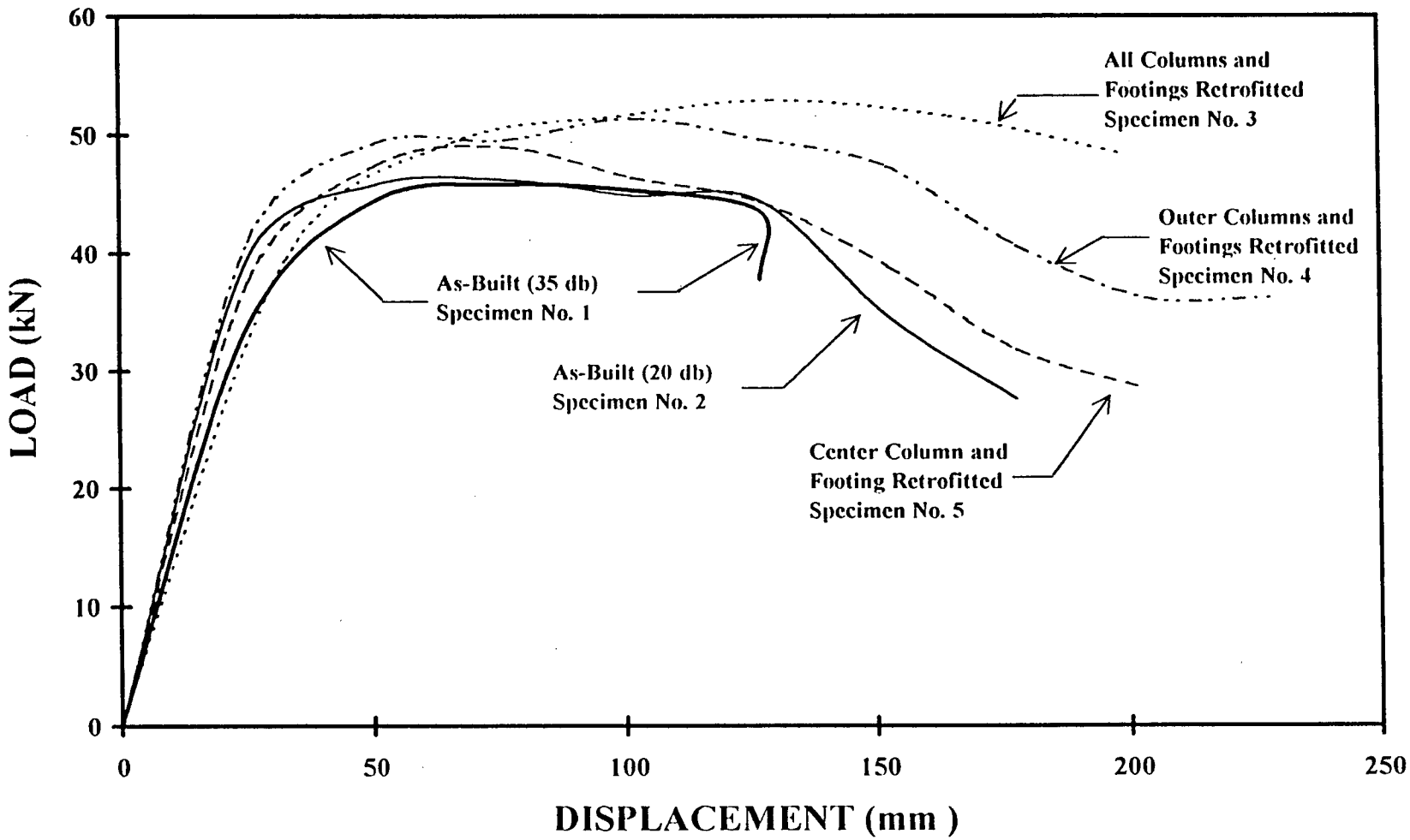

Figure 20 Envelopes of load-displacement curves for as-built, fully retrofitted and partially retrofitted specimens.

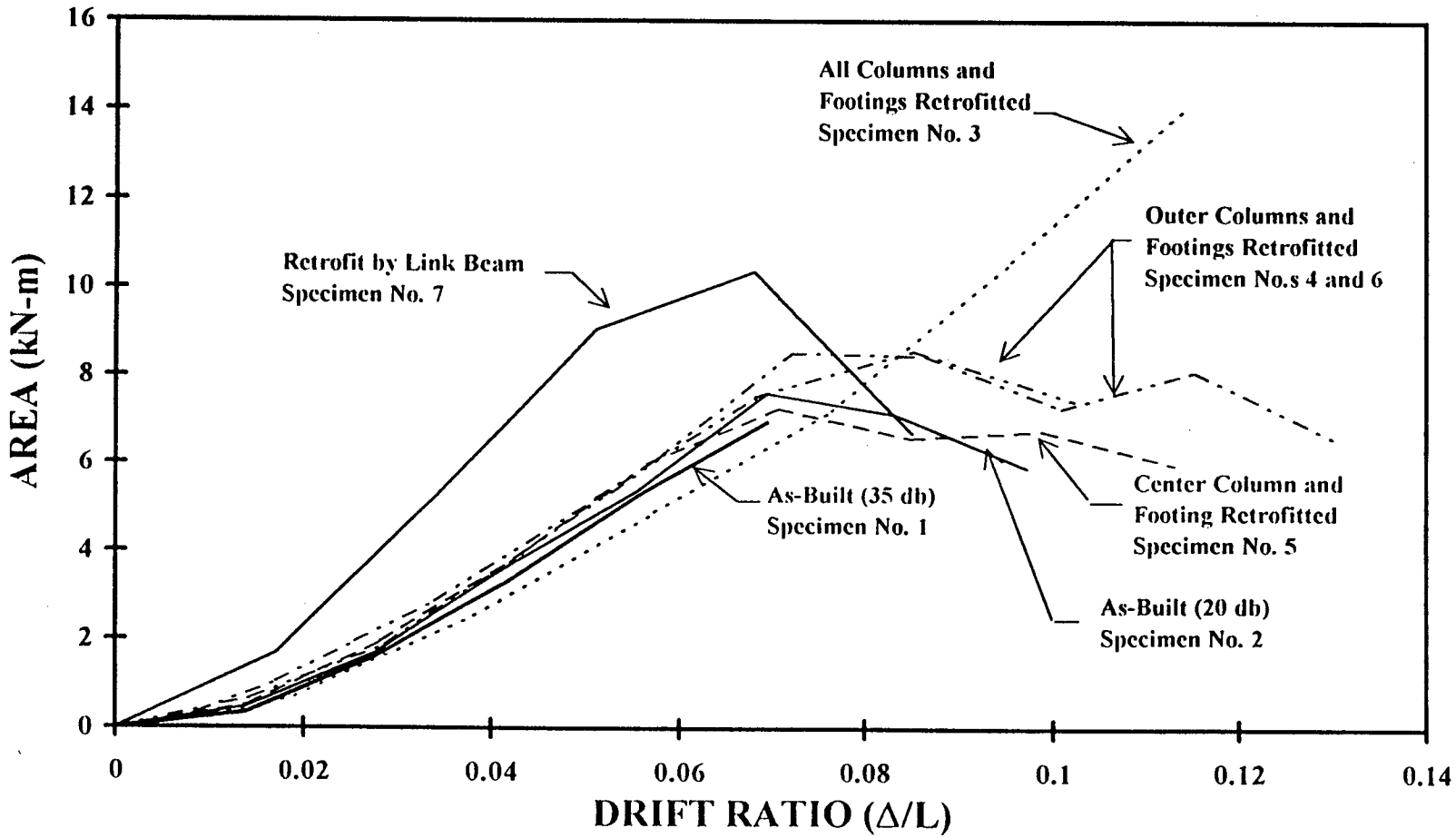

Figure 21 Load-displacement curve areas vs. specimen drift ratio.

Both as-built specimens exhibit increasing energy dissipation up until a drift ratio of approximately 6%, at which time a drop in energy dissipation occurs do to damage within the footings and columns. The curve areas for the specimen with only the center column and footing retrofitted are only slightly greater than those for the as-built specimens, although the values do not significantly decrease until a drift ratio of approximately 10%. The areas for both specimens with the two outer elements retrofitted are larger than those for the as-built specimens, and decreases in energy dissipation capability are not evident until drift ratios of between 10% and 12%. The areas for the fully retrofitted specimen continue to increase to a drift ratio of 12%. The greatest energy dissipation is exhibited by the specimen retrofitted with the link beam, up until the area values begin to drop at a drift ratio of approximately 7%.

Note that the drift ratios reported for these specimens were calculated based upon the measured lateral bent displacements, which include displacements associated with structural deformations and also footing uplift and rotations. Thus, the drift values for the specimens are greater than would be expected for bents with fixed footings or than those that have been reported in tests of bents with buried foundations (e.g., those reported by Eberhard and Marsh, 1997).

CONCLUSIONS

The experimental test results of this study indicate that the substructures of multi-column bridges contain structural vulnerabilities that may result in the bridges performing poorly under seismic loading. Tests on multi-column bent specimens representing as-built conditions show that typical older footings may experience significant cracking and possible joint shear failure in the column/footing connection. However, due to structural redundancy within the multi-column bents, failure of the footings did not in and of itself cause failure in the specimens. With continued lateral loading, eventual failure in the as-built specimens was caused by concrete spalling and longitudinal bar buckling within the flexural hinging regions of the columns.

Retrofit measures developed previously for single-column bent substructures were found to be effective in improving the seismic performance of multi-column bents. A reinforced concrete overlay provided an effective retrofit for the as-built footings, and steel jacketing of the columns was effective in improving both the flexural and shear response. When all substructure elements were retrofitted, a ductile bent response was achieved. Retrofitting only some of the substructure elements incrementally improved performance according to the number of elements retrofitted. While extensive damage occurred in the unretrofitted elements, axial and shear forces continued to be transferred through the damaged regions, enabling a stable bent response until failure occurred within one or more of the retrofitted elements.

The link beam retrofit was effective in preventing damage to the footings during testing, and a reasonably ductile bent response was obtained. Because no column jacketing

was used, failure was caused by degradation within the hinging regions. Based on experience with previous tests of jacketed columns, it would be expected that, had column jacketing been used, the response of the specimen with the link beam retrofit would have been improved even further.

RECOMMENDATIONS/APPLICATIONS/IMPLEMENTATION

The results of this research provide a basis for designing retrofit measures to improve the seismic performance of the substructures of existing multi-column bent bridges. An analysis of the existing bridge must first be performed and the seismic deficiencies identified. In those bridges in which the analyses indicate that the substructures are vulnerable, retrofit measures must be applied so as to produce a ductile response in the overall system. The effects of the retrofitting on transferring forces to other components of the bridge must be considered in selecting the appropriate measures.

In multi-column bent bridges which have substructure deficiencies, the retrofit strategy will typically consist of retrofitting the bridge to produce ductile plastic hinging in selected columns. Columns that are deficient in flexural ductility capacity or incorporate inadequate lap splices may be retrofitted using steel jacketing, fiberglass/epoxy jacketing or various fiber wraps. Columns deficient in shear strength can be retrofitted using similar techniques applied over the full height of the column. Details and procedures for the design of column retrofit measures are provided in Priestley et al (1996), Caltrans Memo 20-4 (1992) and the FHWA *Seismic Retrofitting Manual for Highway Bridges* (1995).

The footings of existing bridges must be evaluated for their ability to carry the input column loads, including recognition of the maximum possible forces resulting from retrofitting measures applied elsewhere in the bridge. Footings need to be evaluated for flexural and shear strength, joint shear strength and footing uplift. Results from this research project and from other research indicate that existing footings may be particularly vulnerable to brittle joint shear failure. Procedures for assessing joint shear capacity have been proposed by Priestley (1991), and the applicability of these procedures was supported by the results of this study. Retrofit measures for improving the performance of existing footings have been developed in a previous WSDOT study (McLean, et al, 1995).

For multi-column bent bridges, a viable strategy for improving seismic performance is to retrofit only some of the substructure elements. The potential benefits of retrofitting only selected elements increases as the number of columns within a single bent increases. However, the effects of damage and strength degradation within the unretrofitted elements must be considered along with the resulting effects on the overall bent response. A simplified nonlinear analysis, such as a pushover analysis, can be used to determine the lateral force and displacement capacities of the partially-retrofitted bent systems. These capacities can then compared to the expected seismic demands on the bridge to insure the appropriateness of the selected retrofit scheme.

The addition of a stiff link beam may be the most cost-effective, and therefore optimal, retrofit strategy for multi-column bents, provided alignment and roadway clearances can be satisfied. By varying the location of the link beam, various improvements in bent performance can be achieved. If the link beam is located near the bottom of the bent, moment transfer into

the footings is significantly reduced, thereby reducing or eliminating the need for retrofitting the footings. Consideration must also be given to the fact that the addition of the link beam will stiffen the bent, increase the shear forces in the columns, and increase the axial forces transferred through the footings.

Retrofit measures must also address the cap beams and joints and the possibility of reinforcement pullout or bond distress. These areas were not addressed in this research study. Guidelines for assessing and designing retrofit measures for these areas are provided in Priestley et al (1996) and the FHWA *Seismic Retrofitting Manual for Highway Bridges* (1995).

ACKNOWLEDGMENTS

This research project was funded by the Washington State Department of Transportation. The investigators gratefully acknowledge the contributions of the engineers in the WSDOT Bridge Office, particularly those of Chuck Ruth and Ed Henley. The grout and epoxy materials used in this study were donated by the Sika Corporation through the efforts of Thad Brown.

REFERENCES

California Department of Transportation (1992). "Memo to Designers, 20-4," April.

Chai, Y.H.; Priestley, M.J.N.; and Seible, F. (1991). "Retrofit of Bridge Columns for Enhanced Seismic Performance," *Seismic Assessment and Retrofit of Bridges, SSRP 91/03*, pp. 177-196.

Cofer, W.F., McGuire, J.W. and McLean, D.I. (1994). "Analytical Modeling of Foundations for the Seismic Analysis of Bridges," Report No. WA-RD 328.1, Washington State Department of Transportation, February.

Cofer, W.F., McLean, D.I. and Zhang, Y. (1997). "Analytical Evaluation of Retrofit Strategies for Multi-Column Bridges," Report WA-RD 427.1, Washington State Department of Transportation, July.

Eberhard, Marc O. and Marsh, M. Lee (1997). "Lateral-Load Response of Two Reinforced Concrete Bents," ASCE *Journal of Structural Engineering*, Vol. 123, No. 4, April, pp. 461-468.

Hexcel-Fife Co. (1994). "TYFO S Fiberwrap System," Hexcel-Fife Co., Del Mar, Calif.

Kuebler, Scott E. (1997). "Evaluation of Seismic Retrofit Strategies for Multi-Column Bridge Bents," M.S. Thesis, Department of Civil and Environmental Engineering, Washington State University, 183 pp.

McLean, D.I. and Marsh, M.L. (1998). "Seismic Retrofitting of Bridge Structures," to appear in the *ACI Structural Journal.*

McLean, David I., Saunders, Thad D. and Hahnenkratt, Harold H. (1995). "Seismic Evaluation and Retrofit of Bridge Substructures with Spread and Pile-Supported Foundations," Report No. WA-RD 382.1, Washington State Department of Transportation, December.

Mealy, Timothy E. (1997). "Seismic Performance and Retrofit of Multi-Column Bridge Bents," M.S. Thesis, Department of Civil and Environmental Engineering, Washington State University, 145 pp.

Priestley, M.J.N. (1991). "Seismic Assessment of Existing Bridges," *Seismic Assessment and Retrofit of Bridges, SSRP 91/03*, University of California, San Diego, pp. 84-149.

Priestley, M.J.N. and Park, R. (1987). "Strength and Ductility of Concrete Bridge Columns Under Seismic Loading," *ACI Structural Journal*, Vol. 84, No. 1, Jan.-Feb., pp. 61-76.

Priestley, M.J.N. and Seible, F. (1991). "Design of Seismic Retrofit Measures for Concrete Bridges," *Seismic Assessment and Retrofit of Bridges, SSRP 91/03*, University of California, San Diego, pp. 197-234.

Priestley, M.J.N., Seible, F. and Calvi, G.M. (1996). *Seismic Design and Retrofit of Bridges*, John Wiley & Sons, Inc., New York.

Seismic Retrofitting Manual For Highway Bridges (1995). Federal Highway Administration, Report No. FHWA-RD-94-052, May.

Sexsmith, Robert, Anderson, Donald and English, Daryl (1997). "Cyclic Behavior of Concrete Bridge Bents," *ACI Structural Journal*, Vol. 94, No.2, March/April, pp. 103-114.

Xiao, Y., Priestley, M.J.N. and Seible, F. (1996). "Seismic Assessment and Retrofit of Bridge Column Footings," *ACI Structural Journal*, Vol. 93, No.1, Jan.-Feb., pp. 79-94

Xiao, Yan, Priestley, M.J. Nigel, Seible, Frieder and Hamada, Nobuhiko (1994). *Seismic Assessment and Retrofit of Bridge Footings, SSRP-94-11*, University of California, San Diego, 167 pp.

XXSYS Technologies, Inc. (1996). "Bridge Column Jacketing Using Advanced Composites," XXSYS Technologies, Inc., San Diego, Calif.