FTA-MD-26-7029-03.8

Chubu HSST Maglev System Evaluation and Adaptability for US Urban Maglev

U. S. Department of Transportation

Federal Transit Administration

March 2004
Final Report

Federal Transit Administration

OFFICE OF RESEARCH, DEMONSTRATION, AND INNOVATION

Chubu HSST Maglev System Evaluation and Adaptability for US Urban Maglev

Final Report

March 2004

Prepared by:

Maglev Urban System Associates

Earth Tech, Inc.

Chubu HSST Development Corporation

Kimley-Horn & Associates, Inc.

Chamberlain Engineering, Inc.

Delon Hampton & Associates, Chartered

7 Saint Paul Street, Suite 900

Baltimore, MD 21202

Prepared for:

Federal Transit Administration
400 7th Street, S.W.
Washington, D.C. 20590

Report Number:
FTA-MD-26-7029-03.8

NOTICE

This document is disseminated under the sponsorship of the U.S. Department of Transportation in the interest of information exchange. The United States Government assumes no liability for its contents or use thereof.

The United States Government does not endorse products of manufacturers. Trade or manufacturers' names appear herein solely because they are considered essential to the objective of this report.

This page intentionally left blank

REPORT DOCUMENTATION PAGE

FormApprovad
OMB No. 0704-0188

Public reporting regarding this collection of information is estimated to average 1hours per response, including the time for reviewing the instructions, searching existing data sources, gathering and maintaining the data needed, and completing and reviewing the collection of information. Send comments regarding this burden estimate or any other aspect of this collection of information, including suggestions for reducing this buden, to Washington Headquarters Services, Directorate for Information Operations and Management and Budget, Paperwork Reduction Project (0704-0188), Washington, DC 20503.

1. AGENCY USE ONLY (Leave blank)	2. REPORT DATE	3. REPORT TYPE AND DATES COVERED
	2003	

4. TITLE AND SUBTITLE
Chubu HSST Maglev System Evaluation and Adaptability for US Urban Maglev

5. FUNDING NUMBERS

6. AUTHOR(S)

7. PERFORMING ORGANIZATION NAME(S) AND ADDRESS(ES)
MUSA : Earth Tech, Inc., Chubu-HSST, Kimley-Horn Assoc., Chamberlain Engineering, Delon Hampton & Assoc. c/o Earth Tech Inc. 7 Saint Paul Street, Suite 900, Baltimore, MD 21202

8. PERFORMING ORGANIZATION REPORT NUMBER
FTA-MD-26-7029-03.8

9. SPONSORING/MONITORING AGENCY NAME(S) AND ADDRESS(ES)
U. S. Department of Transportation
Federal Transit Administration
Office of Technology, Washington, DC 20590

10. SPONSORINGI MONITORING AGENCY REPORT NUMBER

11. SUPPLEMENTARY NOTES This is a Web Document, available on FTA Website [http://www.fta.dot.gov/policy]

12a. DISTRIBUTION/AVAILABILITY STATEMENT - Available from National Technical Information Service, 5258 Port Royal Road, Springfield, VA 22161. Phone 703-605-6000 Fax 703-6900 Email [orders@ntis.fedworld.gov]

12b. DISTRIBUTION CODE

13. ABSTRACT (Maximum 200 words)

The development of magnetic levitation (Maglev) technology has begun to accelerate rapidly throughout the world. Various technologies have been or are presently being developed in the United States and abroad.

This report highlights the viability of the Japanese developed low-speed technology for use in the United States. The objective of an ongoing FTA program is to develop magnetic levitation technology that offers a cost effective, reliable, and environmentally sound transit option for urban mass transportation in the United States. This low speed (max. 60 mph) system can be implemented by integrating existing subsystem technologies to create a comparable system or by improving an existing system using advanced technologies. Foreign technology transfer from abroad is permitted, if it ultimately results in a U.S. technology system. A description is given of the adaptability of this low speed, Japanese developed Maglev system, which is comprised of six principal subsystems, namely: levitation, propulsion, power collection, communications & control, guideway design, and vehicle design. This report gives an overview of one of these FTA funded projects, whose goal is to develop a methodology to overcome critical technology gaps and to determine the viability in funding these technologies which will ultimately lead to the participation by an end-user.

14. SUBJECT TERMS

15. NUMBER OF PAGES

16. PRICE CODE

17. SECURITY CLASSIFICATION OF REPORT	18. SECURITY CLASSIFICATION OF THIS PAGE	19. SECURITY CLASSIFICATION OF ABSTRACT	20. LIMITATION OF ABSTRACT
Unclassified	Unclassified	Unclassified	

NSN 7540-01-280-5500
Prescribed by ANSI Std. 239-18298-102

Standard Form 298 (Rev. 2-89)

Acknowledgement

This report presents the results of a research effort undertaken by Earth Tech under Cooperative Agreement No. MD-26-7029-03.8 to the Office of Research, Demonstration, and Innovation, Federal Transit Administration (FTA). This work was funded by the U. S. Department of Transportation, Federal Transit Administration's Office of Technology. The interest, insight, and advice of Mr. Venkat Pindiprolu, the Contracting Officer's Technical Representative (COTR) and Mr. James LaRusch (FTA Legal Counsel) are gratefully acknowledged.

The valuable comments provided by the representatives of transit agencies, research institutes, and other independent organizations are also gratefully acknowledged. Special thanks are due to Dr. Gopal Samavedam and Mr. Steve Kokkins of Foster-Miller, Mr. George Anagnostopoulos of the DOT-Volpe Center, Dr. John Harding of DOT-FRA, Dr. Roger Hoopengardner of SAIC, Mr. Frank Raposa of Raposa Enterprises, and Dr. Marc Thompson of Thompson Consulting, for their valuable comments during the period of this effort.

Earth Tech also acknowledges the support of the subcontractor corporations who are team members in this activity. They include Chubu-HSST, Kimley-Horn & Associates, Chamberlain Engineering, and Delon Hampton & Associates.

METRIC/ENGLISH CONVERSION FACTORS

ENGLISH TO METRIC	METRIC TO ENGLISH
LENGTH (APPROXIMATE)	**LENGTH** (APPROXIMATE)
1 inch (in) = 2.5 centimeters (cm)	1 millimeter (mm) = 0.04 inch (in)
1 foot (ft) = 30 centimeters (cm)	1 centimeter (cm) = 0.4 inch (in)
1 yard (yd) = 0.9 meter (m)	1 meter (m) = 3.3 feet (ft)
1 mile (mi) = 1.6 kilometers (km)	1 meter (m) = 1.1 yards (yd)
	1 kilometer (km) = 0.6 mile (mi)
AREA (APPROXIMATE)	**AREA** (APPROXIMATE)
1 square inch (sq in, in^2) = 6.5 square centimeters (cm^2)	1 square centimeter (cm^2) = 0.16 square inch (sq in, in^2)
1 square foot (sq ft, ft^2) = 0.09 square meter (m^2)	1 square meter (m^2) = 1.2 square yards (sq yd, yd^2)
1 square yard (sq yd, yd^2) = 0.8 square meter (m^2)	1 square kilometer (km^2) = 0.4 square mile (sq mi, mi^2)
1 square mile (sq mi, mi^2) = 2.6 square kilometers (km^2)	10,000 square meters (m^2) = 1 hectare (ha) = 2.5 acres
1 acre = 0.4 hectare (he) = 4,000 square meters (m^2)	
MASS - WEIGHT (APPROXIMATE)	**MASS - WEIGHT** (APPROXIMATE)
1 ounce (oz) = 28 grams (gm)	1 gram (gm) = 0.036 ounce (oz)
1 pound (lb) = 0.45 kilogram (kg)	1 kilogram (kg) = 2.2 pounds (lb)
1 short ton = 2,000 pounds (lb) = 0.9 tonne (t)	1 tonne (t) = 1,000 kilograms (kg)
	= 1.1 short tons
VOLUME (APPROXIMATE)	**VOLUME** (APPROXIMATE)
1 teaspoon (tsp) = 5 milliliters (ml)	1 milliliter (ml) = 0.03 fluid ounce (fl oz)
1 tablespoon (tbsp) = 15 milliliters (ml)	1 liter (l) = 2.1 pints (pt)
1 fluid ounce (fl oz) = 30 milliliters (ml)	1 liter (l) = 1.06 quarts (qt)
1 cup (c) = 0.24 liter (l)	1 liter (l) = 0.26 gallon (gal)
1 pint (pt) = 0.47 liter (l)	
1 quart (qt) = 0.96 liter (l)	
1 gallon (gal) = 3.8 liters (l)	
1 cubic foot (cu ft, ft^3) = 0.03 cubic meter (m^3)	1 cubic meter (m^3) = 36 cubic feet (cu ft, ft^3)
1 cubic yard (cu yd, yd^3) = 0.76 cubic meter (m^3)	1 cubic meter (m^3) = 1.3 cubic yards (cu yd, yd^3)
TEMPERATURE (EXACT)	**TEMPERATURE** (EXACT)
[(x-32)(5/9)] °F = y °C	[(9/5) y + 32] °C = x °F

QUICK INCH - CENTIMETER LENGTH CONVERSION

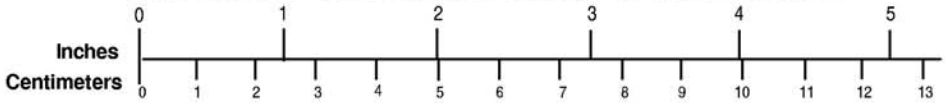

QUICK FAHRENHEIT - CELSIUS TEMPERATURE CONVERSION

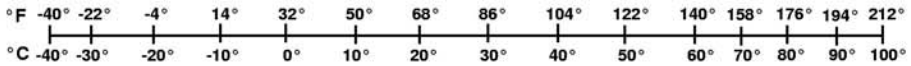

For more exact and or other conversion factors, see NIST Miscellaneous Publication 286, Units of Weights and Measures.
Price $2.50 SD Catalog No. C13 10286

Updated 6/17/98

Table of Contents

EXECUTIVE SUMMARY ES-1

1. PERFORMANCE and TECHNICAL CHARACTERISTICS OF CHUBU HSST SYSTEM 1-1
- 1.1 History of HSST Development 1-2
- 1.2 Commercial Implementation in Japan 1-3
- 1.3 HSST Performance Characteristics and Specifications 1-4
  - 1.3.1 Operational Characteristics 1-4
  - 1.3.2 Vehicle Configuration 1-5
  - 1.3.3 Car Bodies 1-6
  - 1.3.4 Equipment and Furnishing 1-8
  - 1.3.5 Levitation 1-10
  - 1.3.6 Propulsion 1-12
  - 1.3.7 Suspension System 1-15
  - 1.3.8 Braking 1-15
  - 1.3.9 Modules 1-18
  - 1.3.10 Emergency Roller System 1-18
  - 1.3.11 Electrical Power System 1-19
  - 1.3.12 Vehicle Control 1-21
  - 1.3.13 Pneumatic System 1-24
  - 1.3.14 Communication Subsystem (On-Board) 1-27
  - 1.3.15 Signaling System On-Board 1-27

2 COMPARISON OF CHUBU HSST SYSTEM PERFORMANCE CHARACTERISTICS WITH U.S. PERFORMANCE REQUIREMENTS 2-1
- 2.1 Required Performance Characteristics in the U.S. 2-1
- 2.2 Comparison of U.S. Codes and Standards and Chubu-HSST Performance Characteristics 2-2
- 2.3 Identify Issues to be Enhanced to Implement Chubu-HSST System in the U.S. 2-4

3 TECHNOLOGY REVIEW and DEMONSTRATION TRIPS to NAGOYA, JAPAN, MARCH 9 –15, 2002 and FEBRUARY 1-7, 2003 3-1
- 3.1 Trip's Participants 3-1
- 3.2 The Trip's Objectives 3-3
- 3.3 Test Site System Demonstration 3-5
- 3.4 Technical Discussions with Chubu HSST 3-6
  - 3.4.1 Suspension (Levitation and Guidance) 3-6
  - 3.4.2 Propulsion 3-7
  - 3.4.3 Braking 3-8
  - 3.4.4 Train Control 3-8
  - 3.4.5 Guideway Construction Tolerances and Clearance Requirements 3-9
  - 3.4.6 Guideway Switch 3-9

3.5 Meetings with Nippon Sharyo, Aichi Prefecture, and Yahagi Construction Company ... 3-10
3.5.1 Meeting with Nippon Sharyo ... 3-10
3.5.2 Meeting with Aichi Prefecture ... 3-11
3.5.3 Meeting with Yahagi Construction Company ... 3-13
3.6 Other Technical Discussions with Chubu HSST ... 3-14
3.6.1 Train Control ... 3-15
3.6.2 Speed ... 3-15
3.6.3 Curves ... 3-16
3.6.4 Acceleration ... 3-16
3.6.5 Guideway ... 3-16
3.6.6 Cost Model ... 3-16
3.6.7 Safety and Security ... 3-16
3.7 Meetings with Rail Bureau of the Japanese Ministry of Land, Infrastructure and Transport (MLIT) ... 3-17
3.8 Test Ride on Oedo Line ... 3-19
3.9 Summary ... 3-19

4 GUIDEWAY and CIVIL WORKS: PRESENT CONFIGURATION and DESIGN POTENTIAL MODIFICATIONS and IMPROVEMENTS ... 4-1
4.1 General Arrangement ... 4-1
4.1.1 Overview ... 4-1
4.1.2 Sleeper and Rail System ... 4-3
4.1.3 Guideway Superstructure and Substructure ... 4-5
4.2 Applicable United States Codes and Standards ... 4-7
4.2.1 Overview ... 4-7
4.2.2 Principal Reference Documents ... 4-7
4.2.3 Other Applicable Codes and Standards ... 4-8
4.2.4 Comparison of United States and Japanese Codes and Standards ... 4-8
4.3 Structural Design Criteria ... 4-9
4.3.1 Overview ... 4-9
4.3.2 Principal Reference Codes and Standards ... 4-9
4.3.3 Design Life and Fatigue ... 4-10
4.3.5 CHSST Structural Design Criteria ... 4-11
4.3.6 Structural Design Criteria for United States Applications ... 4-12
4.3.7 Summary ... 4-15
4.4 Alignment and Construction Tolerances ... 4-15
4.4.1 Overview ... 4-15
4.4.2 Comparison of Current CHSST System Capabilities with FTA Requirements 4-15
4.4.3 Limiting Factors to Curve Radii ... 4-16
4.4.4 Vehicle Selection ... 4-17
4.4.5 Track Construction Tolerances ... 4-17
4.4.6 Precision Requirements for Trolley Rail Installation ... 4-19
4.4.7 Summary ... 4-20
4.5 Station Design ... 4-21
4.5.1 Overview ... 4-21
4.5.2 Codes and Standards ... 4-21

4.5.3 Americans with Disabilities Act 4-21
4.5.4 Station Planning Considerations 4-22
4.5.5 Platform Design 4-23
4.5.6 Circulation 4-24
4.5.7 Materials and Finishes 4-24
4.5.8 Conceptual Designs 4-25
4.5.9 Summary 4-28
4.6 Switch Design 4-28
4.6.1 CHSST Switch Design 4-28
4.6.1.1 Switch Operation Sequence 4-30
4.7 Guideway Design Issues 4-32
4.7.1 Overview 4-32
4.7.2 Emergency Evacuation 4-33
4.7.3 Snow and Ice / Guideway Heating 4-34
4.7.4 Corrosion Protection 4-36
4.7.5 Grounding 4-37
4.7.6 Summary 4-38
4.8 Potential Guideway Improvements 4-39
4.8.1 Overview 4-39
4.8.2 Rail Fixation Methods 4-39
4.8.3 Foundation Design 4-43
4.8.4 Design and Construction Approach 4-44
4.8.5 Efficiency of Construction 4-44
4.8.6 Fabrication and Construction Tolerances 4-45
4.8.7 Vehicle Weight 4-45
4.8.8 Value Design 4-45

5 VEHICLE, SYSTEM, and SAFETY PRESENT CONFIGURATION and DESIGN POTENTIAL MODIFICATIONS and IMPROVEMENTS 5-1
5.1 Levitation / Propulsion System 5-1
5.2.1 Module Structure and Body 5-1
5.2.2 Suspension System 5-1
5.2.3 Levitation and Guidance System 5-2
5.2.4 Levitation and Guidance System Requirements 5-4
5.25 Propulsion 5-6
5.2.6 Towing Capabilities 5-9
5.2.7 Recommendations and Improvements 5-10
5.3 Automatic Train Control (ATC) 5-11
5.3.1 Automatic Train Operation (ATO) 5-11
5.3.2 Automatic Train Protection 5-15
5.3.3 Automatic Train Supervision 5-19
5.3.4 Train Detection 5-22
5.3.5 Speed Detection Device (VEL) 5-24
5.3.6 Comparison and Recommendations 5-27
5.4 Alternative Braking Systems 5-27
5.4.1 Electrical Braking Subsystem 5-28
5.4.2 Hydraulic Braking Subsystem 5-28

5.4.3 Evaluations and Recommendations 5-30
5.5 On-Board Power / Energy Efficiency 5-31
5.5.1 Current Collector Unit 5-32
5.5.2 High Voltage Main Circuit 5-32
5.5.3 Power Supply Unit (PSU) 5-32
5.5.4 Battery Unit 5-33
5.5.5 Evaluations and Recommendations 5-33
5.6 Electromagnetic Interference and Electromagnetic Fields 5-34
5.6.1 Electromagnetic Interference (EMI) 5-34
5.6.2 Electromagnetic Fields (EMF) 5-36
5.7 Emergency Evacuation 5-43
5.7.1 Current Evacuation Method in Japan 5-44
5.7.2 Possible Improvements 5-44
5.8 Americans with Disabilities (ADA) Applications 5-46
5.8.1 Station and Fixed Facilities 5-46
5.8.2 Existing CHSST system Accessibility Standards in Japan 5-47
5.8.3 Maglev Station Planning Considerations in U.S. Application 5-55
5.8.3 Platform Design 5-56
5.8.4 Summary of Code Compliance with Americans with Disabilities (ADA) 5-57
5.9 Car Body Structural Integrity and Crashworthiness 5-61
5.9.1 Applicable U.S. Safety Requirements 5-63
5.9.2 Foreign and International Requirements 5-64
5.9.3 Summary of Approach to Structural Integrity in Maglev Vehicles 5-65
5.9.4 Structural Capabilities of the CHSST 100 Vehicles (100S and 100L) 5-66
5.10 Vehicle Fire Safety Characteristics 5-72
5.10.1 Fire Retardation and Suppression Requirements 5-72
5.10.2 Materials used on HSST-100L / -100S Vehicles vs. Flammability Requirements 5-74
5.11 Operation and Maintenance strategy 5-79

6 COMMERCIALIZATION PLAN: NORTH BETHESDA TRANSITWAY CORRIDOR 6-1
6.1 Letter of Interest 6-1
6.2 Project Area 6-1
6.3 Overview of the Maglev Corridor 6-3
6.4 Description of the bethesda transitway Maglev Alignment 6-4
6.4.1 Maglev Alignment Guidelines 6-4
6.4.2 Alignment Description 6-5
6.5 Preliminary Environmental Analysis 6-6
6.6 Impacts of this Maglev System 6-6
6.7 Ridership Forecasts 6-7
6.8 Capacity 6-11
6.8.1 Train Operation Estimate 6-11
6.9 Cost Estimate 6-12
6.9.1 Estimate Exclusions and Assumptions: 6-15
6.10 Financing the Bethesda Transitway Maglev 6-16
6.11 Recommendations 6-17

7 CHSST SYSTEM COSTS 7-1
7.1 Introduction 7-1
7.2 System Level Construction Cost Breakdown 7-1
7.3 Guideway Cost Breakdown 7-3
7.4 Vehicle Cost Breakdown 7-3
7.5 Power Supply Cost Breakdown 7-4
7.6 Automatic Train Operation/Protection, Signal and Communication Cost Breakdown 7-4
7.7 Station Costs 7-4
7.8 Cost Comparison with Light Rail 7-4
7.9 System Level Operating Cost Breakdown 7-5
7.9.1 Revenue and Operating Costs 7-5
7.10 Financing of the Nagoya Tobu Kyuryo Line 7-6
7.11 Evaluation and Comparison of Costs 7-6
7.11.1 Capital and Construction Costs 7-6
7.10.2 Operating Costs 7-7

8 SUMMARY of MODIFICATIONS and IMPROVEMENTS to CHUBU HSST MAGLEV SYSTEM 8-1
8.1 Guideway and Vehicle Improvements and Modifications 8-1
8.1.1 Rail Fixation Methods 8-1
8.1.2 Foundation Design 8-2
8.1.3 Design and Construction Approach 8-2
8.1.4 Efficiency of Construction 8-3
8.1.5 Fabrication and Construction Tolerances 8-3
8.1.6 Vehicle Structure 8-3
8.1.7 Value Design 8-4
8.2 System and Safety Improvements and Modifications 8-5
8.2.1 Levitation and Guidance System 8-5
8.2.2 Hydraulic Braking Subsystem 8-5
8.2.3 On-Board Power / Energy Efficiency 8-7
8.2.4 Automatic Train Control 8-7
8.2.5 Emergency Evacuation 8-8
8.3 Ranking of the Key Recommendations 8-8
8.4 Work for Future Phases 8-9
8.4.1 Next Phase 8-9
8.4.2 Future Phases 8-9

APPENDICES

List of Tables

Table 1-1 Summary of System Characteristics 1-30

Table 2-1 Maglev System Standards and Code Comparison 2-5

Table 4-1 Precision Requirements for Rail Installation 4-19
Table 4-2 Sleeper / Rail Installation Rates 4-42

Table 5-1 Classes of Aspect and Modulation Frequency 5-17
Table 5-2 Type and Frequency of Information 5-22
Table 5-3 HSST-100L Magnetic Flux Density Test Results 5-38
Table 5-4 HSST-100L EMF Radiation Compliance w/ U.S. Standards and FTA Requirements 5-41
Table 5- 5 Sample Requirements of Japanese "Barrier Free Law 5-49
Table 5- 6 Summary of Car Body Waits 5-68
Table 5- 7 Evaluation of Flammability Classification 5-73
Table 5-8 Materials used on HSST-100L / -100S Vehicles vs. Flammability Requirements 5-76

Table 6 - 1 Travel Times Along North Bethesda Transitway 6-8
Table 6 - 2 2020 Patronage Estimate 6-10
Table 6-3a Train Operation Estimates 6-11
Table 6-3b Headway Estimates 6-11
Table 6-4 Maglev Conceptual Estimate 6-13

List of Figures

Figure 1-1 Perspective View of CHSST-100L 1-1
Figure 1-2 Guideway Cross Section 1-1
Figure 1-3 Dimension Appearance with Interior Arrangement 1-5
Figure 1-4 Levitation and Guidance System 1-11
Figure 1-5 Main Circuit Schematic 1-13
Figure 1-6 Propulsion Characteristics of LIM 1-14
Figure 1-7 Brake Control Schematic 1-16
Figure 1-8 Emergency Roller Hydraulic System Schematics 1-19
Figure 1-9 Schematic Diagram of Power Supply System on HSST-100L Train 1-20
Figure 1-10 Control Panel (Typical Layout) 1-22
Figure 1-11 Pneumatic Power System Schematic 1-25
Figure 1-12 Door Pneumatic System Schematic 1-26
Figure 1-13 Signal System (ATP /TD) 1-28
Figure 1-14 Signaling System (VEL) 1-29

Figure 3-1 Signal System (ATP /TD) 3-15

Figure 4-1 Perspective View of CHSST-100L 4-2
Figure 4-2 Cross Section Through Guideway Girder 4-3
Figure 4-3 General Shape of Rail 4-4
Figure 4-4 Typical Guideway Elevation and Cross Section 4-6
Figure 4-5 Cast in Place Pier (Front View) 4-6
Figure 4-6 Pile Cap (Plan and Section) 4-6
Figure 4-7 Rail / Sleeper / Girder Attachment Detail 4-10
Figure 4-8 Precision Requirements for Rail Installation 4-18
Figure 4-9 Precision Requirements for Trolley Rail 4-20
Figure 4-10 Center Island Platform 4-23
Figure 4-11 Side Platform Station 4-24
Figure 4-12 Conceptual – Exterior Elevations (Views "A" and "B" on Type 1 Station Concept in Figure 4-15) 4-25
Figure 4-13 Conceptual Design – Floor Plans Plan Prototypical Station Entrance 4-26
Figure 4-14 Conceptual Design – Courtyard and Roof Plan 4-27
Figure 4-15 Conceptual Design – Alternative Roof Types 4-28
Figure 4-16 Switch at Oe Test Track 4-29
Figure 4-17 Crossover / Scissors Switch 4-31
Figure 4-18 Main Line Switch Layout of TOBU-KYURYO 4-32
Figure 4-19 Tobu-Kyuryo Line Emergency Walkway 4-33
Figure 4-20 CHSST-100S Vehicle Operating in Snow Conditions 4-35
Figure 4-21 Typical Grounding Details 4-38
Figure 4-22 Standard Rail / Sleeper Arrangement 4-39
Figure 4-23 Improved Direct Fixation Detail 4-43

Figure 5-1a Levitation and Guidance System 5-3
Figure 5-1b Module Levitation Force vs. Gap 5-5
Figure 5-1c Guidance/Levitation Ratio 5-6
Figure 5-2 Main Circuit Schematic 5-7
Figure 5-3 Typical Running Profile of ATO 5-13
Figure 5-4 Composition of ATO Station Device 5-14
Figure 5-5 Composition of the Entire ATP System 5-16
Figure 5-6 Composition of ATS Substation 5-20
Figure 5-7 Composition of the Entire TD Device 5-23
Figure 5-8 System Configuration Chart 5-25
Figure 5-9 Power of Ground Loop Antenna 5-25
Figure 5-10 Antenna on the Car Coil Arrangement 5-26
Figure 5-11 Relation between Loop antenna and Antenna Coil on the Car 5-26
Figure 5-12 Brake Control Schematic 5-29
Figure 5-13 Schematic Diagram of Power Supply System on HSST-100L Train 5-32
Figure 5-14 Train Inspection Schedule 5-79
Figure 5-15 3-Month Inspection Schedule (Duration: 5.5 Hrs., Typical) 5-80
Figure 5-16 3-Year & 6-Year Inspection Schedule (Duration: 2 months plan, Typical) 5-81

Figure 6-1 Regional Location Map 6-2
Figure 6-2 Monorail Shuttle Alternative 6-3
Figure 6-3 Maglev Alignment – Plan and Profile 6-5
Figure 6-4 Patronage Estimates 2020 6-9

List of Photos

Photo 4-1 CHSST-100L Vehicle at Oe Test Track 4-3
Photo 4-2 Rail Assembly 4-5
Photo 4-3 Switch Aligned Main Line 4-30
Photo 4-4 Switch Aligned at Turnout 4-30
Photo 4-5 Rail Joint at Switch (Side View) 4-30
Photo 4-6 Rail Joint at Switch (Top View) 4-30
Photo 4-7 Typical Sleeper Rail Attachment 4-41
Photo 4-8 Direct Connection w/1 Piece Extension 4-41
Photo 4-9 Direct Connection w/1 Piece Extension 4-41
Photo 4-10 Direct Connection w/2 Piece Extension 4-41
Photo 4-11 Direct Connection w/2 Piece Extension 4-41

Appendices

Appendix A Structural Design Criteria for CHSST-100L Vehicle

Appendix B Alignment Criteria for CHSST-100L System

Appendix C Structural Characteristics for CHSST 100S Vehicle

Appendix D Emergency Evacuation from a Three-Car Train of CHSST 100L Vehicle

Appendix E Letter from Montgomery County

Appendix F Safety Certification by Japanese Government

EXECUTIVE SUMMARY

Study Objectives

The **Maglev Urban System Associates (MUSA)** Team, a consortium lead by Earth Tech (ET) and Chubu HSST Development Corporation (CHSST), studied maglev technology that exists today in Japan and the potential for this technology to be used in the United States.

In the spirit of the TEA-21 Sections 1218 and 3015(c), this report reflects the first phase of the Federal Transit Administration's (FTA) Request for Proposals, "Urban Magnetic Levitation Transit Technology Development Program," Federal Register / Volume 64, No. 19 / Friday, January 29, 1999/ Notice." With the partial funding of an FTA grant, the MUSA team investigated the further development of this system for American utilization. This study accomplished the following objectives:

- Document the technical and performance data for the CHSST maglev system
- Document to what guidelines, standards, specifications, and/or requirements does the Chubu HSST system currently comply
- Document what technical and performance criteria must be met to satisfy U.S. guidelines or standards
- Comparison of existing and required technical and performance criteria
- Examine each of the subsystems and determine its level of performance and associated cost.
- Present these findings in a comprehensive report.

Detailed methodology for the implementation of the recommendations is beyond the scope of this study and is recommended for future phases of this program.

Overview of the CHSST Maglev System

The development of magnetic levitation (Maglev) technology has begun to accelerate rapidly throughout the world. Various technologies have been or are presently being developed in the United States and abroad.

This report focused on examining the Japanese developed low-speed Maglev technology and its adaptability for use in the United States. The overall objective of the FTA program is to develop magnetic levitation technology that offers a cost effective, reliable, and environmentally sound transit option for urban mass transportation in the United States. It is expected that Federal funding would be used to develop US components and technology. It is envisioned that funded projects will include the design of an Urban Maglev system and the development and demonstration of advanced hardware subsystems to verify advanced technology aspects of proposed system concepts. The system design can be derived from integrating existing subsystem technologies (to create a new system) or by improving an existing system using advanced technologies. Foreign technology transfer from abroad is permitted, if it ultimately results in a U.S. technology

system. FTA views a total Maglev system as composed of six principal subsystems, namely: levitation, propulsion, power collection, communications & control, guideway design, and vehicle design.

Over twenty-five years have passed since Japan Air Lines (JAL) succeeded in developing the magnetic levitation vehicle HSST-01. (HSST is the acronym for High Speed Surface Transportation.) This accomplishment was followed by the HSST-02 Model that accommodated eight (8) passengers. JAL's continued efforts increased the levitation power using special shaped electrical magnets and traction force induced by an electrical linear motor, resulting in a series of more advanced vehicles, the HSST-03, -04, and -05. These models were showcased to the public to demonstrate the technical and environmental advancements of the HSST System at the Tsukuba Science Exposition (1985), the Aoi Exposition (1987), the Saitama Exposition (1988), the Yokohama Exposition (1988) in Japan, and at the Vancouver Transport Exposition (1986) in Canada.

Based on the accumulation of technical expertise gained through the operational experience by the various HSST models mentioned above, Chubu HSST Development Corporation (CHSST) completed a two-car train, HSST-100, in 1991. It is the HSST-100L maglev vehicle (a slightly larger version of the HSST-100) that was evaluated in this report.

The HSST-100L vehicle was developed for low speed magnetic levitation transport application. The HSST 100-L vehicle can operate from 2 to 8 cars per train; the final configuration is driven by the operating characteristics of the specific project. With an operators cab at each end, the train is capable of bi-directional operation. Some of the general specifications and operating conditions for the HSST-100L vehicle are:

Max. Operating Speed	100 km/h (62.1 mph)
Max. Gradient	7%
Min. Horizontal Curve Radius	Side line track 50 m (164 ft)
	Main line track 75 m (246 ft)
Min. Vertical Curve Radius	1500 m (4,921 ft)
Max. Super Elevation Angle	8 degrees

Passenger Capacity for three-car train	Seated	Standing	Total
0.3 sq m/standee (465 sq in.)	104	144	248

Car Body Length	14.0 m (45’-11") for Mc car (end car)
	13.5 m (44’-4") for M car (mid car)
Width	2.6 m (8'- 6")
Height	3.2 m (10'-6")
Rail Gauge	1.7 m (5'-7")
Empty Weight	17,500 kg/car (38,581 lbs/car)
Fully Loaded Weight (AW2)	28,000 kg/car (61,729 lbs/car)

Advantages of Maglev

The CHSST 100-L vehicle has operated for many years on the test track and at several Expositions, and has indicated that it has several advantages over conventional urban transportation systems. These include:

Superior and Sustained Ride Quality:
The noise and vibration generated is minimal. Since the CHSST vehicle runs so quietly it can operate during late-night or early morning hours in residential areas or near sensitive areas.

Environmentally Friendly:
It is pollution free with no diesel smoke or other hazardous gases. The iron and rubber particles generated by railroad wheel wear are eliminated.

Adaptable to Variable Route Conditions:
These vehicles' 7% gradient climbing capacity and small radius of curvature (75 meters) enable the track to be laid along alignments with complex topography, including many gradients and curves.

Lower O&M Costs:
Since the 100-L vehicle never comes into actual contact with the rail, both track and train maintenance costs are expected to be substantially reduced.

High Reliability:
Because there are no moving parts and everything is driven by electrical power, the operational reliability is very high.

How Does It Work?

Levitation:
The 100L car uses the attraction force of magnets, which also provide lateral control. The magnet attracts the rail and causes the car to levitate. The vehicle is equipped with ten (10) magnetic modules under every single car of the train, making it possible to disperse the load. A gap sensor maintains a constant gap between the magnet and the rail so that the car does not come in contact with the rail. The lateral control is also made by the attraction force of the levitation magnet. In cases where the vehicle is shifted laterally due to wind or where it goes around curves, the magnet's electromagnetic force provides automatic lateral control.

Propulsion:
The 100L is propelled by a linear motor. It is a motor made by splitting an ordinary rotary motor open and deploying it flat. The force generated by the motor directly propels the train car. The primary coil of the motor is mounted on the car; the secondary side is in the form of an aluminum reaction plate installed along the rail surface. These

two components comprise what is known as a Linear Induction Motor or LIM, a simple mechanism that generates sufficient force to propel the train.

Cost Comparisons

The projected capital costs for the elevated portion of the CHSST Tobu-Kyuryo Line including stations, is110 M$/mile (2002 dollars) for the complete two-way system. Higher specific costs in Japan could account for a high overall amount relative to a U.S. deployment, including:

- Use of actual "hard" quotes as opposed to preliminary estimates
- Inclusion of "Expo" features not directly related to the Maglev system
- Negotiation of specific urban areas, and
- Design changes made during the interim

For proprietary reasons, the costs for the other system elements: vehicles, power supply/distribution and the train control/protection, signal and communication, and stations were not broken down by CHSST. Only a rough estimate for their cost was made, based on the proportional costs used in the 1993 study by Aichi Prefecture and an adjusted total cost for a Tobu-Kyuryo Line assuming "all-elevated" construction. All these estimated costs exceeded FTA targets, but they will revise when actual construction, operating and maintenance cost data becomes available.

A conceptual estimate was prepared for a proposed 2.3-mile long alignment in North Bethesda, Maryland (a suburb of Washington, D.C.) The estimate covers an alignment comprised of a dual guideway with five (5) aerial stations. This estimate also includes a covered tail section guideway at the Montgomery Mall Station, which would be used to park and maintain the vehicles. The alignment would utilize the Japanese Low-Speed Maglev Urban Transportation System, as adapted to meet US criteria in the following areas: power requirements, guideway flexibility, ADA Compliance, safety and security. The guideway is designed with twin precast boxed girders running on a series of concrete piers at 66 foot spacings. The five aerial stations are approximately 200 linear feet long with raised center platforms. The platform has a double crossover to allow for changing guideways. There is an extension of the guideway of approximately 200 linear feet beyond the Montgomery Mall Station to accommodate maintenance operations.

Based on this alignment and configurations, the total cost was estimated at $142.4 Million or $51.55 Million per mile (2002 dollars).

The breakdown of the costs, as a percentage, are as follows:

Guideway Structure & Track	51%
Power Substations & Distribution	6%
Signal & Communications	3%

Stations & Buildings	16%
Vehicles	22%
Other (ROW, etc.)	2%

Comparing these percentages with those based on a 1993 cost estimates by the Aichi Prefecture, the percentage costs for the guideway and vehicles for the North Bethesda lime are substantially higher. However, the 51% for guideway and track is close to the range of 55%-60% of the total cost which is typical for building of guideways in the US. The higher 22% for the vehicle procurement may be accounted for in the additional shipping from Japan and assembly costs in the US. This 22% of cost may be reduced if several vehicles are ordered concurrently, thus warranting a discount in the purchase price. Also, as previously mentioned, there will be a degree of error in this cost because for confidentiality reasons, more definitive vehicle costs were not made available by CHSST and their subcontractors.

The other percentages for signals, power and stations will vary based on the specific site and alignment.

Conclusions/Recommendations

As a result of this study, the following are major conclusions and recommendations:

- A simplification of the rail fixation method will reduce construction and maintenance costs
- Utilizing state of the art design criteria can streamline the guideway column and beam structures
- The 100-L vehicle can easily be adapted to utilize US Automatic Train Control systems
- Guideway walkways and vehicle access and egress must be redesigned to allow for efficient emergency evacuation
- Vehicle interiors and station configurations can be made to meet ADA requirements
- The Linear Induction Motors (LIMs) need to be redesigned from using the present 1500 Volt (DC) system to the US standard of 750 Volts (DC)
- Reduce the vehicle weight through development of higher capacity levitating modules and use of composite materials for the vehicle chassis
- Development of more efficient levitation modules are needed to increase the load capacity of the vehicle
- An implement of a Design/Build Option in the Bidding Process to possibly reduce the construction costs

This listing reflects, in descending order, ease of implementation without major redesigns. For example, simplifying the Rail Fixation Method may be adapted most readily, whereby increasing the Levitation Capacity would require a major redesign of the modules.

Recommendations for future phases of work include the following:

- Analyze the guideway structure and component life for 160 kph operation in view of the fact that the guideway permanent structure is expected to serve for 75 years. Also, analyze the life of attachments and the impact on maintenance strategy and cost.

- Estimate the frequency of inspections, and associated costs for guideway maintenance and adjustment of profile and alignment.

- Analyze the vehicle dynamic behavior under worst possible combinations of guideway tolerances, and ensure that no instabilities occur and the FTA ride quality requirement is satisfied at least at 130 kph speed.

- Monitor the progress in Nagoya on the technology, financing and construction for the proposed 9.2 km Tobu-Kyuryo revenue line. Upgrade the proposed system in the U.S. on the basis of any relevant improvements and experience gained in Japan. Some additional testing specified in this report can possibly be carried out on the Tobu-Kyuryo guideway proposed in Japan. The Tobu-Kyuryo Line signal system may not be designed for speed of 130 kph and the Nagoya test track is too short for 130 kph runs. CHSST should examine the feasibility of 130 kph test demonstrations.

- Test, evaluate and perform endurance tests on a suitable test track the design changes implemented of a CHSST system suitable for deployment in the U.S.

- A fully automatic train control system provides the principal means of longitudinal control and safety. Therefore, an independent safety risk assessment consistent with current FTA guidelines must be performed prior to the CHSST being given approval for operation in the U.S. This assessment also should provide independent validation and verification of all the safety-critical control functions.

- Develop financial partnership and deployment plans for selected routes in the U.S.

The MUSA team believes that the Chubu-HSST 100-L transportation system has the originality and technical competency to fulfill a need for a low speed (60mph max.) intra urban area transportation system in the 21st Century.

1. PERFORMANCE and TECHNICAL CHARACTERISTICS OF CHUBU HSST SYSTEM

The following provides a summary of the current performance characteristics and technical specifications of the Chubu HSST 100-L magnetic levitation train system. The performance characteristics and technical specifications of the system described, reflect the very latest developments in the HSST 100-L vehicles and system, and are representative of the system that will be implemented for the Tobu Kyuryo line in Nagoya, Japan scheduled for completion in the Spring of 2005. This will be the first commercial application of a low speed magnetic levitation train system in the World.

Refer to **Figures 1-1** and **1-2** for a perspective view of the Chubu HSST 100-L train and a typical guideway section of the Tobu-Kyuryo line that will have both aerial and tunnel sections.

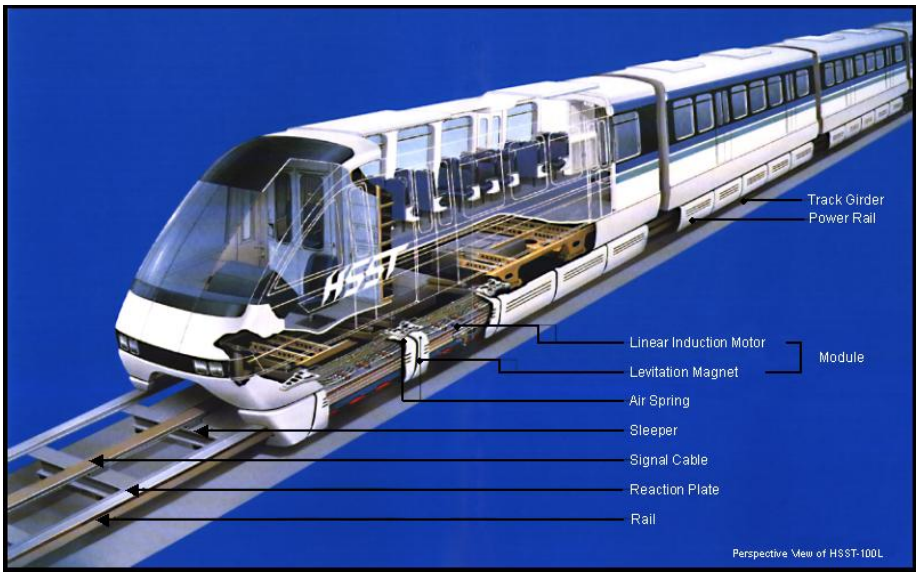

Figure 1 - 1 Perspective View of CHSST-100L

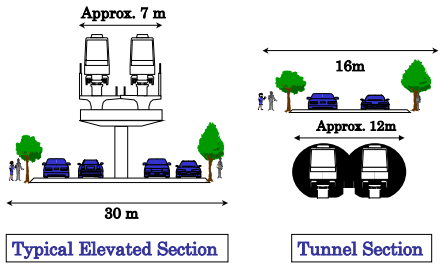

Figure 1 - 2 Guideway Cross Section

In order to provide an appreciation of the extensive, 30-year development history of the HSST system, an overview of the history of the Chubu HSST system development, from initial test bed studies in the early 1970s through to present day, is given below.

This chapter then presents technical descriptions of the performance characteristics and technical specifications of the vehicle, and the various systems, subsystems and components that comprise the vehicle and system as a whole.

1.1 HISTORY OF HSST DEVELOPMENT

Development of the High Speed Surface Transport (HSST) magnetically levitated train system began in the early 1970s, when Japan Airlines decided to introduce a new form of high speed transport to connect airports with city centers. Japan Airline's objective was to develop a fast, efficient and environmentally friendly system for use in both inter-city and urban applications. They recognized the need to develop a system that was adaptable to both low and high-speed applications capable of negotiating tight turns in built-up, highly congested urban areas, yet having the ability to accelerate quickly in open areas to minimize overall travel time. The development process, from the early prototypes to the commercially licensed model available today in Japan, is explained in the following paragraphs.

After basic research in the early 1970s, Japan Airlines constructed a 1.3 km (0.8 mile) test track and carried out a series of operational experiments with two test vehicles, designated HSST-01 and -02. The vehicles were designed using the principle of electro-magnetic suspension (EMS) in which attractive magnetic forces are generated in a U-shaped magnet that wraps around an iron rail to create the levitation force. The propulsion was provided by linear induction motors (LIM). The same basic principles are used on the current generation of HSST vehicles.

In 1978, the testing program confirmed the technical feasibility of the system when prototypes were successfully tested at speeds of up to 308 km/hr (193 mph). Over the next several years, efforts were concentrated on making a commercially viable version of the vehicle. During this period, a series of developmental vehicles were created to carry passengers at science expositions and world fairs. The first of these, the HSST-03, went into operation at the Tsukuba Science Exposition in March of 1985. (Track length of 350 m or 0.22 mile.) It had fifty seats and successfully transported a total of 610,000 passengers during the exposition. The same vehicle was demonstrated at the Vancouver Transport Exposition from May to October of 1986, and carried 470,000 people, over a total distance of 7,770 km (4,828 miles). (Track length of 450 m or 0.3 mile.) The HSST-03 vehicle also made demonstration runs at the Aoi Exposition in Okazaki, Japan, where it remained in operation for three years. (Track length of 175 m or 0.11 mile.)

In 1985, the HSST Corporation was formed and took over further development from Japan Airlines. Successive generations of the vehicles, the HSST-04 and -05, were demonstrated at the Saitama Exposition in the spring of 1988 (track length of 327 m or 0.2 mile) and at the Yokohama Exposition from March through October 1989 (track length of 515 m or 0.32 mile). For the Yokohama Exposition, the HSST-05 received a railway business license from the Japan

Ministry of Transport for commercial operations and transported more than 1.2 million people over a total distance of 29,000 km (18,000 miles).

In 1991, after the Yokohama Exposition concluded, the Aichi Prefecture in Nagoya, Nagoya Railroad Company, and HSST Corporation, formed Chubu HSST Development Corporation (CHSST) to develop the first fully commercial version of the train. CHSST constructed a new 1.6 km (1 mile) test track in Nagoya where full-scale commercial testing of HSST's current generation of vehicles, the 100-S (short wheel base) and 100-L (long wheel base), has taken place to the present date. In depth evaluations of all aspects of the vehicles and their propulsion and control systems culminated in acceptance of the technology by the Japan Ministry of Transport (MOT) in April of 1993. The MOT confirmed there were no technical deficiencies or problems for its commercial application in Japan, and enacted laws for the system for public transport use for operational speeds of up to 100 km/hr (62 mph).

Concurrent with the development of the 100 series vehicles in the mid 1990s, design for the 200 series vehicles also took place. Two hundred series are capable of speeds in excess of 200 km/hr (124 mph). The HSST 200 series vehicle was originally developed in 1975 and was designated as the HSST-05. In the development history of the CHSST, this was the first modular design evolution of HSST and unlike its predecessors incorporated both LIM propulsion and EMS levitation. It was also the first magnetically levitated train to be authorized to carry passengers, and it did so at the Yokohama Exposition in 1989.

Although the LIM for the HSST-05 was originally designed to operate at 200 km/h, the Yokohama exposition consisted of only a 570 m track, which thus limited vehicle speeds to 42 km/h. Because of this known limitation, Chubu has stated that the onboard power electronics controls for the LIM were not designed for the maximum speed capability, but designed specifically for the Yokohama demonstration. Further, there were some propulsion design configuration issues on how the 3.6 m LIM modules were to be connected in order to achieve an optimum design and as of the time period of 1989 were still to be resolved.

Following the Yokohama testing, CHSST had planned to take an upgraded version of this vehicle to Las Vegas and test it to 200 km/h. However, the Las Vegas program did not materialize and high-speed testing was not performed. In the early 1990s, Chubu studied a 50 km route between Hiroshima airport and downtown Hiroshima that would require a speed capability of up to 200 km/h. Because of a downturn in the Japanese economy, the Hiroshima line was never realized.

Although the high speed capability of the HSST-05 could not be demonstrated at Yokahama, the HSST-200 is a good candidate for consideration of operations at 200 kph. This was demonstrated in the laboratory using a scaled rotating wheel arrangement in Japan.

The scope of the proposed work has focused on the commercial implementation of the CHSST-100L series vehicles in the United States.

1.2 COMMERCIAL IMPLEMENTATION IN JAPAN

In 1999, HSST was selected by the Aichi Prefecture in an open design competition to design and construct a feeder line system approximately nine kilometers (5.6 miles) long with a total of nine stations. The system will connect a terminal of the Nagoya City subway in the eastern section of downtown Nagoya to one of the Aichi Circle Line stations adjacent to an Exposition site. The system will pass through a number of developing suburbs. One of the key factors for the selection of the HSST system was its ability to negotiate the difficult terrain encountered along the system alignment. The route includes areas of tight horizontal and vertical curvature, a tunnel section and sections with steep grades (up to 6%). The system is scheduled for completion in time for the opening of the 2005 Exposition. At the end of the Exposition, the system will remain in full commercial operation and connect the newly developed areas it passes through. This will be the first fully commercial, revenue generating, magnetic levitation system in the World.

Design of the guideway, civil work and infrastructure was completed in December 2001. Construction of all elements of the civil works including the guideway, tunnel section, stations, maintenance facility and control center, is scheduled for completion by the summer of 2004.

The first vehicle was delivered in November 2002. Following six months of testing at the existing test track in Nagoya, the remaining 21 vehicles will be released for manufacture. System testing will commence in late summer of 2004 when the civil works and the required number of vehicles are completed.

1.3 HSST PERFORMANCE CHARACTERISTICS AND SPECIFICATIONS

Current performance characteristics and technical specifications of the Chubu HSST 100-L magnetic levitation train system are described in the following sections with detailed discussions in Chapters 4 and 5.

- Operational Characteristics
- Vehicle Configuration
- Car Body
- Equipment and Furnishing
- Levitation
- Propulsion
- Suspension
- Braking
- Modules
- Emergency Roller System
- Electrical Power System
- Vehicle Control
- Pneumatic System
- Communication Subsystem
- Signaling System

1.3.1 Operational Characteristics

The Chubu HSST system is an adaptable system. It is able to operate in varying topography from mountainous regions to densely developed cities due to its relatively steep climbing and tight radius curve turning capabilities. The minimum negotiable horizontal curve radius is 50 meters (164 feet); however, a 75-meter (246 ft) minimum radius is recommended on the main line track to maintain a reasonable speed. Maximum gradient is 7%. Other characteristics are listed below.

General Specification

Max. Operating Speed	100 km/h (62.1 mph)
Max. Initial Acceleration	4.0 km/h/s (2.5 mph/s)
Max. Deceleration	
Service Brake	4.0 km/h/s (2.5 mph/s)
Emergency Brake	4.5 km/h/s (2.8 mph/s)
Max. Gradient	7%
Min. Horizontal Curve Radius	Side line track 50 m (164 ft)
	Main line track 75 m (246 ft)
Min. Vertical Curve Radius	1500 m (4,921 ft)
Max. Super Elevation Angle	8 degrees

Passenger Capacity for three-car train	Seated	Standing	Total
0.3 sq m/standee (465 sq in.)	104	144	248

Refer to **Figure 1-3** for interior arrangement of a three-car train.

Normal Operating Conditions

Temperature	- 10°C to 40°C (14°F to 104°F)
Relative Humidity	0% to 95%, without dew condensation for electric equipment
Max. Wind Velocity	25 m/sec (56 mph) Structure is designed for 50 m/sec (112 mph) wind

1.3.2 Vehicle Configuration

The HSST 100-L vehicle can operate from 2 to 8 cars per train; the final configuration is driven by the operating characteristics of the specific project. With an operators cab at each end, the train is capable of bi-directional operation. A three car train consist has been selected for the Tobu Kyuryo line in Nagoya. Each train set consists of two end-cars (Mc1 and Mc2) and one mid-car (M). Train sets consisting of more than eight vehicles are possible; however, a typical configuration for a short system will be between two and four vehicles. The vehicles are coupled together by means of mechanical couplers.

Train Type and Formation

(1) Vehicle Type	HSST-100L
(2) Train Formation	Cars: Mcl, M & Mc2

Refer to **Figure 1-3** for train car designation.

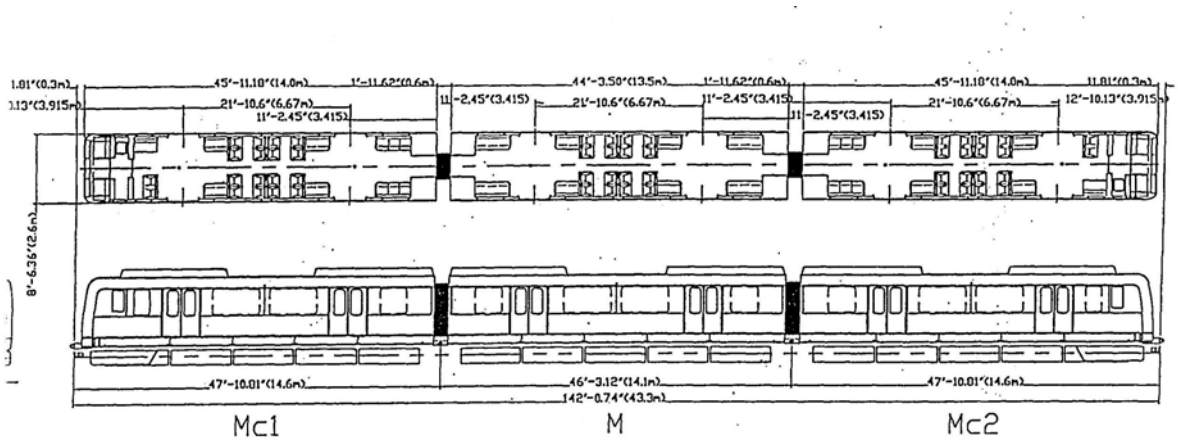

Figure 1 - 3 Dimension Appearance with Interior Arrangement

Vehicle Dimensions

(1) Car Body Length	14.0 m (45’-11") for Mc car (end car) 13.5 m (44’-4") for M car (mid car)
(2) Width:	2.6 m (8'- 6")
(3) Height:	3.2 m (10'-6")
(4) Rail Gauge	1.7 m (5'-7")

Vehicle Weight

(1) Empty	17,500 kg/car (38,581 lbs/car)
(2) Fully Loaded (AW2)	28,000 kg/car (61,729 lbs/car)

1.3.3 Car Bodies

The car consists of two sections: car body (upper portion) and a series of modules (lower portion). Ten modules are arranged on both sides, under each car body (5 on left and 5 on right). Vehicle weight, including modules, is 17,500 kg (38,581 lbs). Each vehicle is 2.6 meters (8'-6") wide and 3.2 meters (10'-6") high. Electric power supply is 1,500 V DC from a pantograph current collector running along the top of the guideway.

The car body is principally aluminum alloy with use of fiber reinforced plastic and thin aluminum plate and is of semi-monocoque construction, consisting of frames, stringers and skin panels. The principal load path of the vehicle is the floor base level frame. It resists the axial load transferred through couplers, and also transmits payload load to module by way of sliding tables and air suspensions. The floors consist of aluminum honeycomb panels.

Bi-parting, horizontally sliding, outside hanging doors with sensitive edges are provided on both sides of the vehicle to facilitate loading and unloading. The doors are pneumatically operated and include pressure sensitive switches causing the door to reopen if any object greater than an inch in diameter obstructs the door.

The forward facing windows are made of a heat absorbing safety glass, and the crew and passenger compartment windows, including the windows in each passenger door, are tempered safety glass.

Structural Design

- General Descriptions
  1. Weight (for load calculation purpose)

	Car body	Modules (Per car)	Car Max. Loaded
Max. Design weight	17,500 kg (38,581 lbs)	6,500 kg (14,330 lbs)	28,000 kg (61,729 lbs)

  2. Design Service Life — 20 years of service

- Structural Design Concept
  1. Load/Definition
     Limit load is the highest load expected in the life of the vehicle.
     Ultimate load is obtained by multiplying the limit load by a safety factor.
  2. Safety Factor
     Safety factor of 1.5 is used for structural analysis.
     That is: Design ultimate Load = 1.5 x (Limit Load).

Additional safety factors (e.g. safety factor of 1.15) are applied to fittings, castings and welds.

3. Strength
   The structure is designed to support the limit load without permanent deformation and the ultimate load without destructive failure.
4. Fatigue
   The vehicle is designed for fatigue service life, which is same as design service life.
5. Fail -safe
   Principal structure, of which a failure could result in catastrophic damage to the vehicle, has fail-safe feature. Where such principal structural part does not satisfy the fail-safe criteria, high-reliability and durability design is used to minimize failure probability during the life of the structure.
6. Corrosion Protection
   Corrosion protection is provided for all primary and secondary structures either by use of corrosion resistant materials or by use of protective finishes.
7. Fasteners
   Captive type fasteners shall be used where they are removed and installed frequently for maintenance access.

Car Body Components

- ### Floor Panel

Light-weight aluminum sandwich panel is used for the floor material panel. The requirement is to withstand 550 kg-f per square meter (113 lbs/sq ft) load and a concentrated load of 135 kg-f applied with a 2-cm diameter steel ball at any point on the top surface without failure or permanent indentation greater than 1.3 mm (0.13 in.).

- ### Doors

Passenger Service Door:
Automatic, power operated, bi-parting horizontally sliding external doors are provided on both sides of the vehicle for passenger entrance and exit (2 per side per car). All doors have windows and are weather stripped and sealed for normal service. The doors are locked during train movement.

Door or door control subsystem failure does not result in vehicle door unlocking or opening. In the event of power loss to any vehicle door mechanism or failure of door controls or devices, it is possible to open the failed door manually, using manual unlocking device from both inside and outside the vehicle.

The door reverse operation occurs when an object is between the bi-parting doors. The doors, supporting tracks, and/or linkage are designed to withstand a static force of approximately 100 kg (220 lbs). Loading conditions are as follows:

- It is applied at right angle at the center of the door panel.
- It is distributed over an area of approximately 10 cm by 10 cm (4 in. by 4 in.) without permanent deformation.

- No binding of the door mechanism.

End Door:
End cars are equipped with emergency exit door in the front of the car to provide an evacuation walkway to another train or guideway under an emergency situation.

- **Windows**

  Fixed forward windshields are installed in the control cab. The forward facing window in front of the driver meets the safety requirement of JIS R3025, and is of laminated glass. The control cab side windows and passenger compartment windows, including windows in each passenger door, are of tempered glass. Side sliding windows are installed on both sides in the control cab with passenger door open/close switches.

- **Lifting Pads**

  Vehicle lift points (4 points per car) are provided on the side of car body. Lifting pads are detachable and easy to remove and install.

- **Coupler**

  The semi-automatic mechanical couplers are provided at both ends of the train. It is possible to couple trains on the guideway to push or pull a failed train with an active train. Couplers between cars are fixed type.

Module Structure

The module body is principally made of aluminum alloy. The module main body is composed of two end boxes and an upper beam, and these are joined mechanically. The upper beam supports linear induction motor (LIM) and the end boxes support electromagnets.

The module is equipped with gap sensors, landing skids, emergency rollers and linear induction motor electromagnets and hydraulic brakes. Ten modules per car are installed in the area below the cabin floor (5 on left, 5 on right). The left and right modules in pair, which face each other, are coupled by a connection link. Principal functions of the module are propulsion by LIM, levitation by electromagnets and braking. Propulsion force is transferred to the car body through thrust rods and sliding tables. Levitation force is also transferred to car body by way of air suspensions and sliding tables.

1.3.4 Equipment and Furnishing

The car interior is designed to comply with *Structure Regulation for Special Railway*, which is established by the Japanese government regarding the flammability of materials, and with Japanese Industrial Standard (JIS) regarding the strength of components.

Interior Arrangement

Refer to **Figure 1-3**.

Interior Lighting System

- Cabin Lighting system: Fluorescent lights are provided in the control cabin and passenger compartments
- Emergency Lighting system: The control cab lights and two passenger compartment lights work as emergency lighting system connected to on-board battery power.

Exterior Lighting system

Two headlights and two taillights are installed at each side of the front face of the end cars. The on-board batteries supply the 100 V DC power for these lights.

- Headlight: Two head light assemblies are located near the taillight. Each assembly has two HID lamp bulbs for 150 W and 50 W. The 150 W bulb illuminates by “High” position of the switch and the 50 W bulb by both “Low" and “High” positions.
- Tail Light: Tail light assemblies are located at each corner of the front and rear face. A control switch controls the lights.

Air Conditioning System

The vehicles are equipped with three systems for conventional cooling, warming and ventilation.

- Cooling system
  1. Two package units are mounted on the roof of each car for control cab and passenger compartment.
  2. The package consists of components such as inverter, evaporator, motor-blower assemblies, condenser, compressor, piping and other necessary parts.
  3. Power source
     a. Main power 275 V DC
     b. Control power 100 V AC
  4. Box Size 315 cm long by 200 cm wide by 26 cm high (124" long by 79" wide by 10" high)
  5. Weight Approx. 350 kg/ea (772 lbs/ea)
  6. Capability Approx. 15,000 kcal (59,525 BTU)
  7. Air-flow Approx. 45 m^3/min (1589 ft^3/min.)
  8. Aluminum metal duct

  The air supply distribution ducts are located on the ceiling and are suitably insulated to minimize heat transfer.
- Warming System
  1. Passenger Compartment
     a. Electric heaters are provided under each passenger seat pair.
     b. Electric capacity 300 Watts (approx.)

  2. Control Cab
     a. A heater with blower is provided in control cab.
     b. Electric capacity 300 Watts (approx.)
- Ventilation System: The ventilation system consists of motor fans, air outlet grills and control device. In case of main electric power loss, the function of cooling and warming systems is stopped automatically and the ventilation motor fans are operated immediately.

Windshield Wiper and Washer

The control cab is provided with windshield wiper and washer for good visibility for manual train operation. The wiper units provide three operational modes: intermittent, low speed and high-speed modes.

Sun Shade

One flip-up type sunshade is provided in each control cab so that the operator can limit sunlight coming through the windshield.

Horn

Each cab is equipped with an electronic horn. The horn switch is installed on the floor under driver's console.

1.3.5 Levitation

The distinguishing characteristic of all maglev technologies is the use of magnetic forces to levitate and propel the vehicles without any physical contact with the guideway. There are two Design approaches to create levitation: electro-magnetic suspension (EMS) and electro-dynamic suspension (EDS). HSST has adopted the EMS approach, which uses the "attractive" magnetic force to achieve levitation. The use of attractive EMS concentrates the magnetic flux between the rail and levitation magnet, virtually eliminating the magnetic flux radiated into the train. A constant gap is maintained between the magnet and the iron rail by means of a gap sensor that measures the gap and compensates for any movement. The attractive force of the levitation magnet also provides lateral control of the vehicle. When the vehicle is shifted laterally by wind or by centrifugal force, the gap sensor detects an increase in the gap between the magnet and the rail and sends a signal to adjust the power at the electro-magnets, so correction can be made.

The Levitation and Guidance System (LGS) provides vehicles with contactless support of the vehicle with high reliability and high stability. LGS functions independently on each module and is supplied from 275 V DC bus. Batteries to maintain vehicle levitation until the train comes to a complete stop even in case of power interruption during running back up the LGS power source. Refer to **Figure 1-4** for LGS layout.

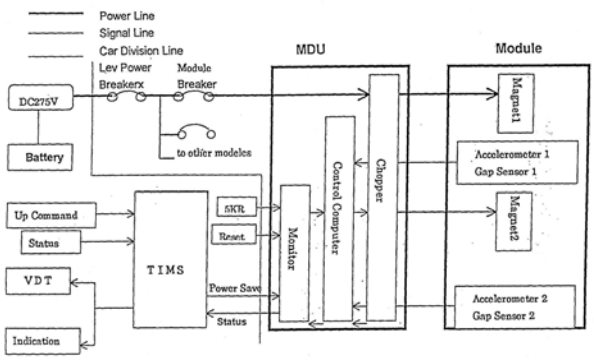

Figure 1-4 Levitation and Guidance System

Ten modules in total levitate and guide each car. One control system is comprised of two pairs of magnets, two sensor units, and one magnet driver unit (MDU). The levitation magnet has a U-shaped iron core, which has a natural stability in the lateral direction when floating underneath the inverse U-shaped rail.

The LGS provides good riding comfort with less impact to the environment than conventional transportation systems. Characteristics of the LGS system are as follows:

Levitation Power

Levitation power of LGS is supplied from a 275 V DC bus. The bus, when energized, rises up gradually to 275 V so as to avoid rush current. Levitation power is supplied to each MDU separately through a module breaker.

Magnets

Magnets are of normal conducting and attractive type. It has a U-shaped iron core to obtain natural stability in the lateral direction. One module has four levitation magnet coils. Each two coils are connected in series to realize two magnet systems in one module. The top of the magnet core is capped with copper alloy shoes as a provision for abnormal attraction to the rail. The electrical insulation of the coil is JIS F-type. The magnet has all weather resistibility. The standard magnetic gap is 8 mm (0.315"), while its mechanical air gap from the magnet shoe to the bottom of the rail teeth is set to 6 mm (0.236"). Design magnetic attractive force is 1,040 kg-f/m (699 lbs/ft) per rail or 2,600 kg-f/module (5,732 lbs/module).

Levitation Control System

The levitation control system consists of a magnet driver unit (MDU) and sensors and provides a contactless support of the vehicle. The MDU is installed at the vehicle side section above the module. MDU power supply is designed to be independent so that problems in any particular unit do not affect other units. The MDU controls the voltage of electrical power fed to the

magnet for stable levitation. It has three sections: control computer section, chopper section and monitor section.

- Control Computer Section: It receives gap and acceleration signals from the sensors installed on the module and calculates for an adequate voltage to be supplied to the magnet. It also monitors levitation command from the vehicle control system (through the monitor section) and current signals from the chopper section. The control computer section sends the appropriate magnet voltage signal to the chopper section.

- Chopper Section: It chops the 275 V DC power according to the pulse width modulation (PWM) signal sent by the control computer section and feeds the magnets with the chopped DC power. One MDU has two channels of chopper. The rated current of the MDU is 45 A and the maximum allowable current is 150 A.

- Monitor Section: It receives levitation command and sends levitation status information to and from the vehicle control system. It also provides gap signals for the purpose of LGS monitoring test.

The sensors report the module levitation status variables to the MDU. The gap sensor is installed on the top of the magnet with an accelerometer located nearby.

Indication

The LGS sends current levitation status (floating or landing) and current system activity (working or failed) to train integrated management system (TIMS).

1.3.6 Propulsion

Propulsion is provided by linear induction motor (LIM). The LIMs are housed in the train, rather than along the guideway, resulting in a "passive" rather than an "active" guideway. All motor technology is in the vehicle. This minimizes the complexity of the guideway with the added benefit that if a motor fails, only the train itself is affected, not the system as a whole. The LIM is simply a rotary motor opened out into a flat configuration. The primary coil (stator) of the motor is mounted in modules on the underside of the vehicle and reacts with an aluminum reaction rail installed along the guideway surface to propel the vehicle.

The propulsion system consists of one inverter system and ten LIMs for every car. LIMs are electrically connected in an arrangement of 5-series, 2-parallel (5S-2P) per car. The propulsion force is generated by LIMs when the variable voltage variable frequency (VVVF) inverter supplies the AC power.

The braking force is also generated by LIMs, under the control of the brake command controller.

The propulsion system provides the propulsion force and the electrical braking force by using the following devices:

- Current collector and high voltage main circuit of the electrical power system
- Variable voltage variable frequency (VVVF) inverter, which transforms DC power into an appropriate AC power for the linear induction motor (LIM)

- Primary section of the LIM on the modules
- Secondary section of the LIM (reaction plates on the guideway.)

Refer to **Figure 1-5** for the main circuit schematics.

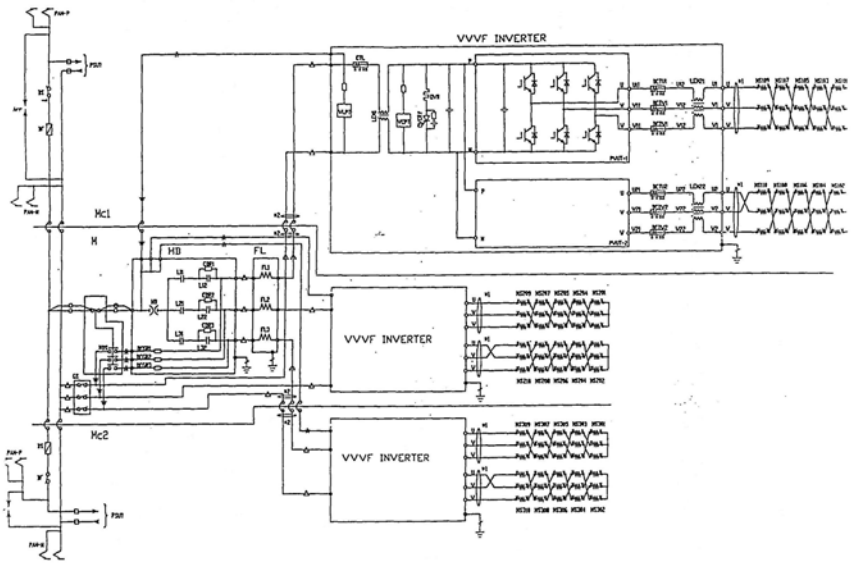

Figure 1 - 5 Main Circuit Schematic

Variable Voltage Variable Frequency (VVVF) Inverter

The electrical power, supplied through the high voltage input section, is inverted to the electric power, having appropriate voltage and frequency by the VVVF inverter. Although the current control is basically made by the thrust command calculated using ATO notch signal or manual notch signals, the thrust command is compensated by the vehicle weight data, which is picked up by air suspension pressure transducers.

In the range of high speed, the thrust is limited due to the limitation of output voltage of the inverter. The output frequency is also an important factor determining the speed of the vehicle. Non-contact speed detection devices are used as a source of speed data for the inverter system. There is a predetermined slip frequency that represents the difference between the inverter output frequency and synchronous frequency, which is proportional to the vehicle speed. The applied frequency to the LIM is controlled both in acceleration and deceleration ranges.

Major Specifications of the VVVF Inverter is as follows:

- Trolley Rail Voltage 1500 V DC
- Max. Output Voltage 1100 V AC
- Max. Capacity 1450 kVA / 2 car Unit
- Frequency Range 0 - 90 Hz
- Type of Control Voltage control type, Pulse Width Modulation (PWM)
- Cooling Type Forced air-cooling

Linear Induction Motor (LIM)

Each car is equipped with 10 Linear Induction Motors (LIMs) on 10 modules. The LIM is installed on the under surface of the module's main structure and is supported at multiple fixed points. Each LIM is approximately 1.8 m (6 ft) long, 0.6 m (2 ft) wide, and 80 mm (3.2 in.) thick.

LIM Specifications:

- Thrust (nominal) 3000 N/LIM (675 lbf/LIM)
- Phases / Poles 3 phases/8 poles
- Material of Coil Aluminum
- Current (Max) 380 A
- Secondary Conductor (track) 4 mm (0.16 in.) thick aluminum plate

Refer to **Figure 1-6** for propulsion characteristics.

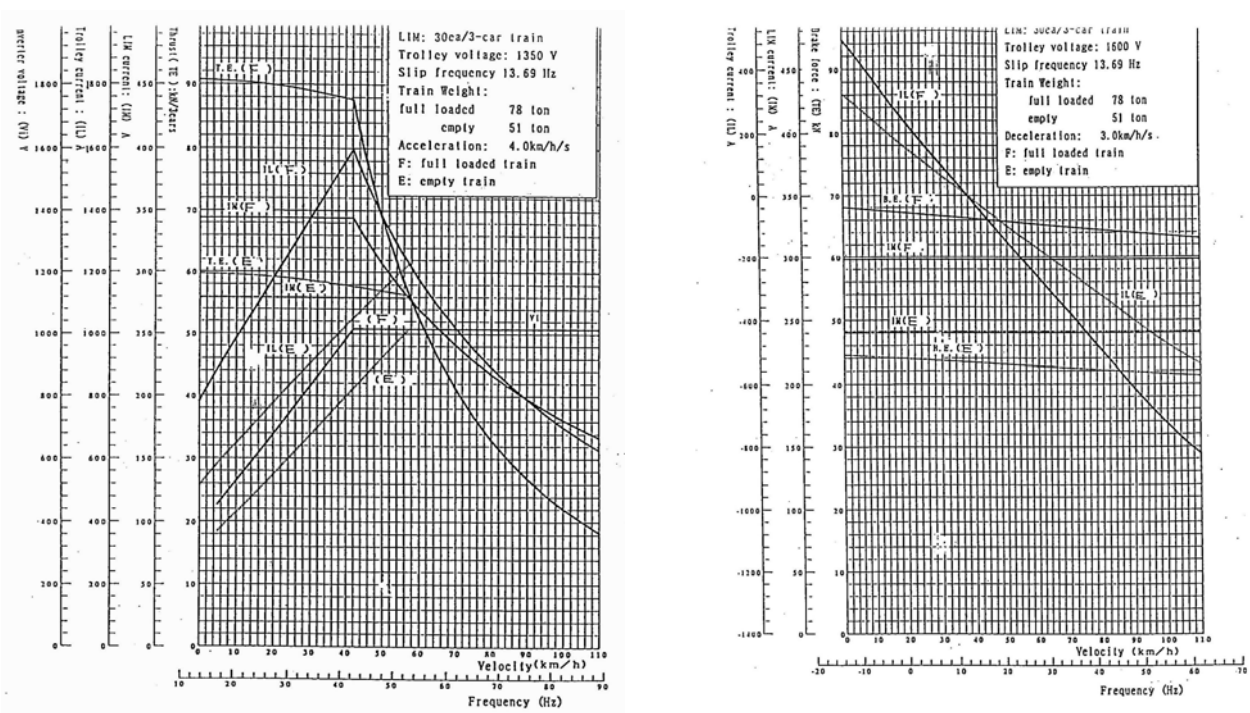

Figure 1-6 Propulsion Characteristics of LIM

1.3.7 Suspension System

While the primary suspension of the vehicle is provided by the levitation and guidance system, air springs and mechanical linkages provide the secondary suspension. The suspension system holds the car body gently so as to give good ride comfort and resistance to external disturbances. Various forces work between the car body and the modules in vertical, lateral and longitudinal directions. The air suspension system, which comprises air springs and its supporting devices, holds the car body in vertical and lateral directions.

- The Air Suspension System is comprised of an air spring installed between each module end and slide table. It conveys the car weight to the module and, at the same time, buffers the module movement before it is conveyed to the car body, resulting in a comfortable ride.

- The car body is leveled at a certain height above the rail by means of air supply system with a source of air pressure between 7 and 9 kg-f /sq cm (100 and 128 psi).

- The Air Supply System is divided into three individual systems so the car body weight is supported in a triangle form.

- The Lateral Mechanical Suspension System consists of slide tables that are installed at the front and rear of each module. They are designed to move laterally for the vehicle to follow the curved guideway. All slide tables are connected mechanically to each other and equalize and convey lateral load to each module.

- The Longitudinal Mechanical Suspensions consist of linear bearings installed on the lower surface of the vehicle body floor, slide tables and thrust rods connected to slide tables. They convey linear motor thrust and brake force.

1.3.8 Braking

The brake system features two independent components: an electric brake (providing regenerative and reverse phase braking) for normal operation and a supplementary hydraulic brake used when the vehicle is traveling below 5 km/hr (3.1 mph). (The transition from electric brake to hydraulic occurs at approximately 5 km/h.) However, in case of an emergency, the hydraulic brake system can be used at any speed range. The hydraulic brake system is designed and sized to handle full emergency braking needs, and assumes no assistance will be available from the electric braking system during an emergency.

The hydraulic brake actuator is a mechanical friction brake whose brake linings pinch the rail flange by hydraulic pressure, and the friction between brake lining and rail flange provides the braking force. Hydraulic units are installed on six of the ten modules.

Hydraulic Brake System

Each car has an independent hydraulic system. The hydraulic brake system consists of the section of hydraulic power brake pressure control and brake actuators. This system operates at

pressure of 210 kg-f /cm^2 (2,986 psi) and uses synthetic fire-resistant fluid (Quinto lubric 822 series) as the hydraulic fluid. The principal component of hydraulic power section consists of the hydraulic pump, the primary and the standby accumulator, and the pressure switch. The hydraulic pump is operated with the pressure switch located at each accumulator line.

If the accumulator pressure drops to 185 kg-f /cm^2 (2,631 psi) or less, the hydraulic pump is activated to raise the pressure. When the pressure reaches 211 kg-f/cm^2 (3,001 psi), the hydraulic pump stops.

The brake pressure control section has three subsystems:

- Service brake pressure control
- Emergency brake pressure control
- Standby brake pressure control

Brake Control System

Refer to **Figure 1-7** for bake control schematic.

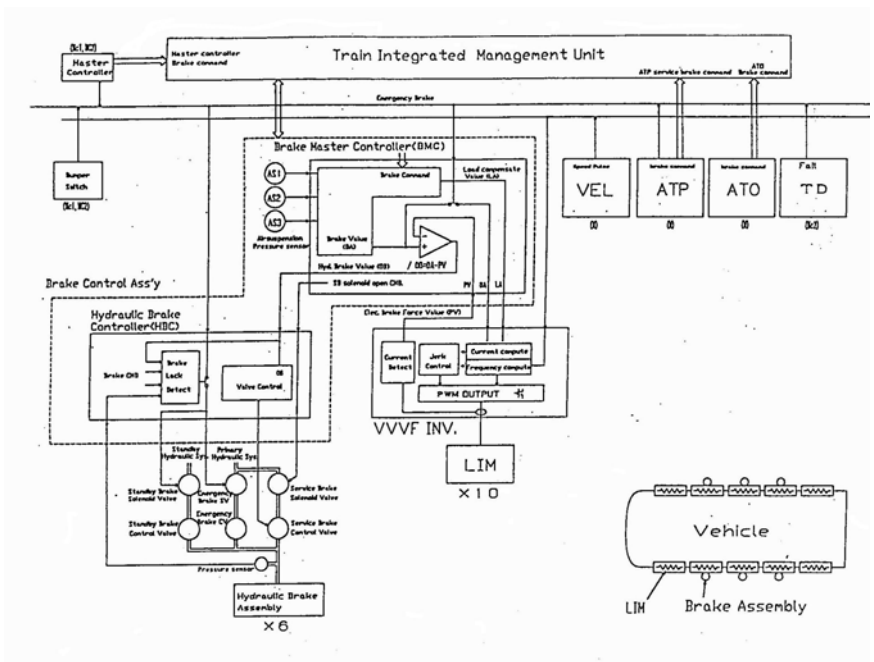

Figure 1 - 7 Brake Control Schematic

Braking command modes are:

- RGN: Regenerative or reverse phase brake using linear motor (RGN)
- HYD: Hydraulic brake
- Manual Brake Command by Operator

1. Service Brake Command (RGN+HYD=>HYD)

This brake command is activated when the operator sets the master control level at the brake position (B1 - B4). The maximum service brake rate is 1.12 m/s^2 (2.5 mile/h/s) or less. Note: B1 is the weakest brake and B4 is the strongest one (2.5 mile/h/s).

2. Emergency Brake Command by Master Control Lever (HYD)

   This brake command is activated when the operator sets the master control lever at the "EMERG" position. The emergency brake rate is 1.25 m/s^2 (2.8 mile/h/s).

3. Emergency Brake Command by Push Button (HYD)

   This brake command is activated when the operator pushes the push button. 1.25 m/s^2 (2.8 mile/h/s).

4. Brake Command at Gradient (HYD)

   This brake command is activated when the operator turns on the gradient brake switch at gradient.

- Automatic Brake Command (HYD)

1. ATP Emergency Brake Command

2. Dead Man Brake Command (HYD)

   This brake command is activated when the operator releases the grip from the master control lever. The brake rate is 1.25 m/s^2 (2.8 mile/h/s).

3. Emergency Brake Command due to vital system failure (HYD)

   This brake command is activated when any of the following failures occur, and results in 1.25 m/s^2 (2.8 mile/h/s) brake rate.

   a. Failure of ATP system
   b. Failure of velocity detection system
   c. Detection of reverse running
   d. Vehicle disconnection
   e. Opening of a door at or above 5 km/h (3.1 mph) vehicle speed

- Automatic Brake Command 1 due to system failure (RGN+HYD=>HYD)

This brake command is activated when one of the following conditions occur and results in 1.12 m/s^2 (2.5 mile/h/s) brake rate:

a. Pressure drops of the primary or standby hydraulic system accumulator.
b. Voltage drop of trolley or failure of PSU
c. Failure of TIMS

- Automatic Brake Command 2 due to levitation failure (RGN+HYD=>HYD)

This brake command is activated when levitation of any Module fails.
0.894 m/s^2 (2.0 mile/h/s)

Hydraulic Pump Control

Pressure switches are installed at the accumulators of the primary hydraulic system and standby hydraulic system of each car. If either of the accumulator pressure becomes 181 kg/cm^2 (2,570 psi) or less, the pressure switch turns on a hydraulic pump to raise the pressure. When the pressure reaches 211 kg/cm^2 (3,000 psi), the pressure switch goes off and the operation of the pump stops.

1.3.9 Modules

The HSST 100-L car bodies are attached to ten modules (five on each side of the car), which provide the levitation and propulsion. Each module consists of gap sensors, landing skids, emergency rollers, linear induction motor electro-magnets and hydraulic brakes. The rollers remain retracted in the vehicle under normal operating conditions. In the event of a loss of levitation, the rollers are lowered hydraulically under manual control to allow emergency recovery of the vehicle.

1.3.10 Emergency Roller System

The purpose of the emergency roller system is to support the train when the levitation function is partially or entirely lost. The emergency rollers and hydraulic actuators are installed near each landing skid at the front and rear ends of each module. The emergency rollers can support the total vehicle weight by operating the hydraulic actuator. Hydraulic power is supplied by the primary hydraulic system.

The emergency roller hydraulic system consists of a solenoid-operating valve; check valve, restrictor, 10 self-sealing couplings and 40 hydraulic actuators/car. The solenoid-operating valve is installed under the floor and is operated by the emergency roller switch in the control cab.

When the emergency rollers are in the extended position, the train can run under its own LIM propulsion.

Refer to **Figure 1-8** for emergency roller hydraulic system schematics.

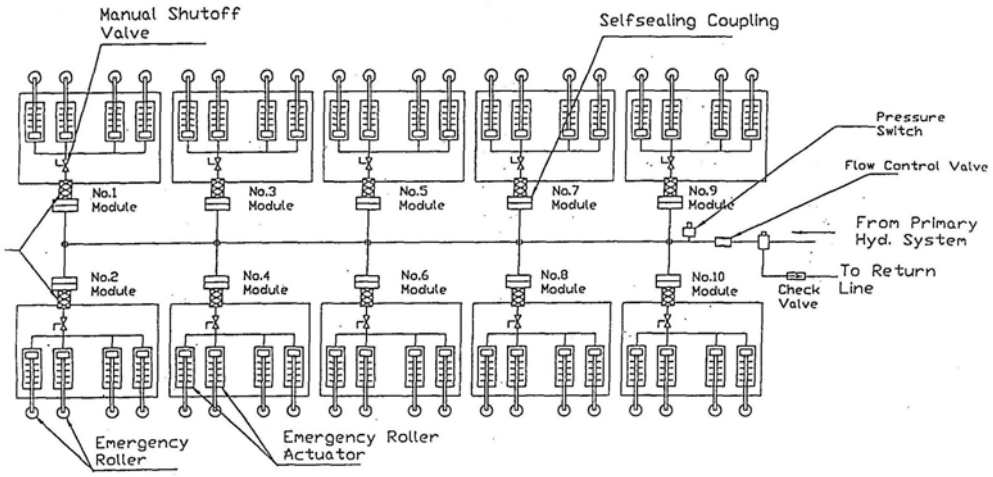

Figure 1 - 8 Emergency Roller Hydraulic System Schematics

1.3.11 Electrical Power System

The electrical power system of the vehicle consists of an on-board power converter/inverter apparatus (referred to as the power supply unit), input switch, and battery. The power supply unit (PSU) transforms the high voltage direct current (1500 V DC) picked up by current collectors unit into the following 3 types of electrical power:

- Main DC Power 275 V DC for levitation, air conditioner
- AC Power 100 VAC 1φ60 Hz, for general use
- DC Power 100 V DC for control and communication

The PSU consists of high voltage inverter section (H-INV) box and low voltage converter section (L-INV) box. The power collected by the current collector is fed to PSU via input disconnect switch. Since 275 V DC is essential for levitation and vehicle control, 275 V DC power source is backed up by 2 units of on- board 237 V, 20 A-h battery.

Even in case of PSU failure or loss of the trolley power, the vehicle can continue to levitate by using the battery power source for approximately 30 seconds until it decelerates to a stop. The battery power source can also supply power for safety and emergency systems such as lighting and communication for approximately 30 minutes.

Two PSUs are installed on a 3-car train. Refer to **Figure 1-9** for power supply system schematic.

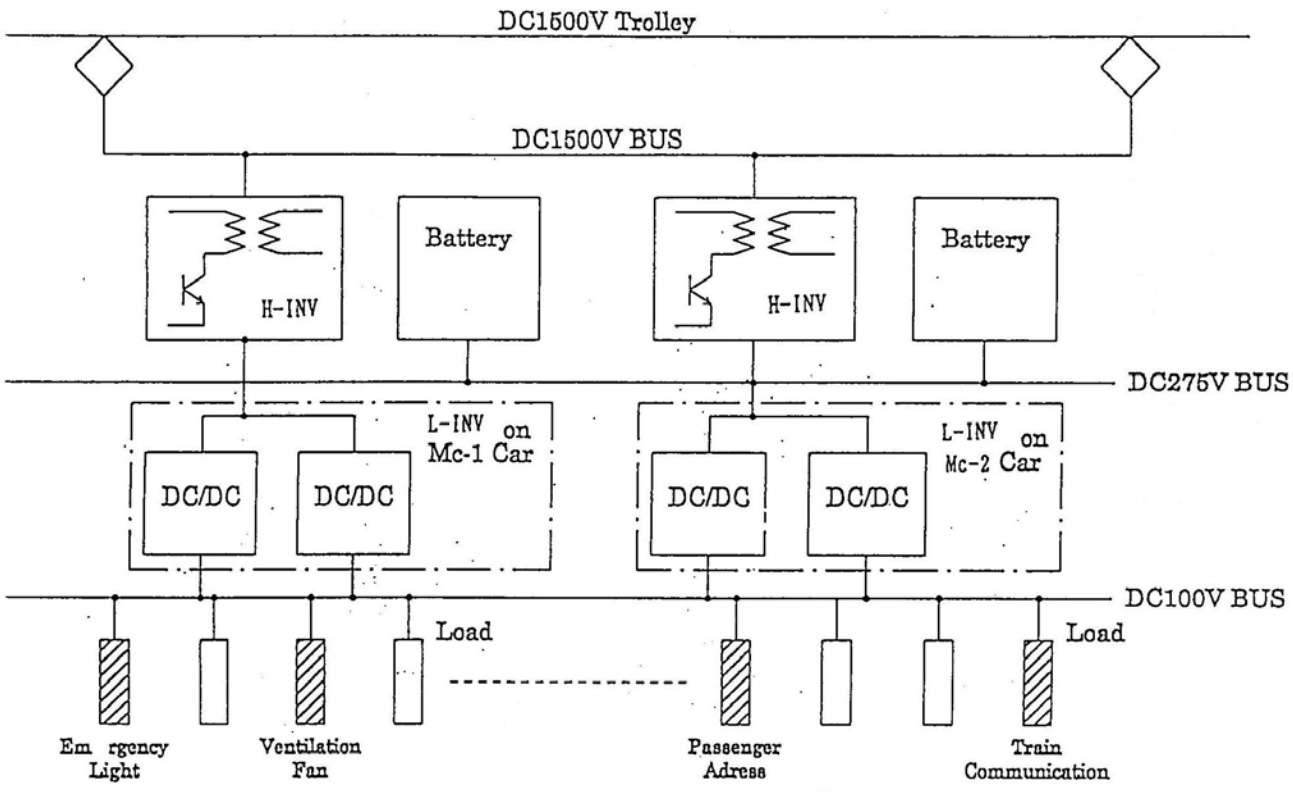

Figure 1 - 9 Schematic Diagram of Power Supply System on HSST-100L Train

In the maintenance yard, a train can be supplied with a 275 V DC from the ground power source through a connector instead of trolley rails.

Current Collector Unit

- Three-car train is equipped with 4 pairs of power current collector units, which ensures continuous stable current supply of 1,500 V DC.

- Typical Specifications for Power Collector Unit

1. Type	Side contacting "Z" type, not retractable
2. Capacity	600 A
3. Pressing method	Spring type with contact brush pad
4. Current collector units	4 pairs (8 units)

High Voltage Main Circuit

1,500 V direct current supplied to the train through the current collector unit is led to the high voltage bus wire, then fed to the PSU via its own disconnect switch in each polarity, namely the IVS for plus, and the IVGS for minus.

The IVS of the PSU input disconnect switch is usually in the closed position, and in the open position during check or maintenance.

Power Supply Unit (PSU)
The PSU is an inverter/converter complex of transforming 1,500 V DC into different type of power sources required on the vehicle.

- H-INV convert 1,500 V DC power to 275 V DC power, which is the power source of the levitation system and the other system on the vehicle.
  1. Type-Main circuit High frequency transistor inverter with multiple stages
  2. Input voltage 1,500 V DC
  3. Output 275 V DC

- L-INV has the DC-DC converter, which provides DC power for vehicle control and emergency communication equipment. And also L-INV has the DC-AC inverter, which provides AC power for utility unit.
  1. Input Voltage 275 V DC
  2. Output Voltage 100 V DC/8.7 KW unit
     100 V AC / 2.6 kVA unit
     / 1φ60Hz (quasi sine wave)

  Two PSU units are installed on a 3-car train.

Battery Unit

Output of 275 V DC of PSU is free from power interruption due to the floating battery charger unit, which consists of an alkaline battery with 198 cells and 20 A-hr high discharge rate.

The battery is capable of supplying power to the levitation system for approximately 30 seconds while the voltage goes down to 200 V due to extremely high discharge current. The battery is not capable of energizing the propulsion system.

Two battery units are installed on a 3-car train.

1.3.12 Vehicle Control

This system consists of three interconnected subsystems, which are:
- Control Console
- Train Integrated Management System (TIMS)
- Visual Display Terminal (VDT)

Control Console

A control console is installed at the front of each end car. The control console consists of control panel, display panel and other supplemental panels.

1. Control Panel: The control panel consists of the following:
   (Refer to **Figure 1-10**)

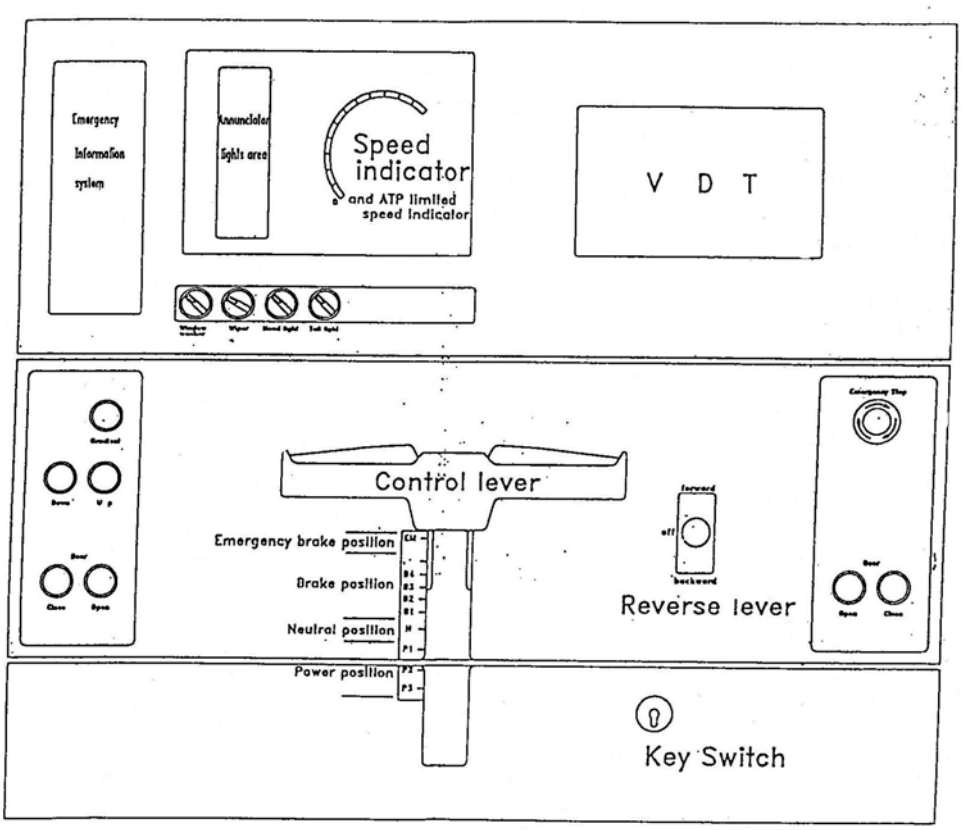

Figure 1-10 Control Panel (Typical Layout)

(a) Key Switch

The key switch activates the control panel when turned on.

(b) Control lever

This control lever selects the rate of propulsion and braking.

Typical positions of the lever are shown below:

Propulsion	3 positions
Braking	4 positions
Emergency braking	1 position
Neutral	1 position

(c) Reverse Lever

This lever switches the vehicle direction forward or backward.

(d) Dead-man Switch

This switch is located on the grip of the control lever, and if the driver experiences any trouble and cannot hold the switch, the emergency braking is activated automatically.

(e) Up/Down Switch

This switch commands the levitation and guidance system to levitate the vehicle.

The down function cannot be activated in the speed range above 5 km/h (3.1 mph).

(f) Gradient Switch

This switch activates the hydraulic brake, which protects the vehicle from moving due to gradient, when the vehicle levitates just before starting.

(g) Emergency Stop Push Button

This button activates directly the emergency braking system, and stops the vehicle at the maximum deceleration rate.

2. Display Panel: The display panel consists of lights and indicators.
   (a) Actual Speed Indicator
   The analog/digital-type indicator displays the actual vehicle speed.
   (b) ATP Limited Speed Indicator
   (c) Vehicle System Monitoring Annunciator Lights.
   The lights indicate the vehicle conditions such as warning, berth, and door close.

3. Meter Panel
   (a) Power Rail Voltage Indicator.
   (b) Battery Voltage Indicator

Train Integrated Management System (TIMS)

The TIMS collect and monitor information from the train operations control and the operating condition of each vehicle subsystem. The TIMS control units equipped on each vehicle are inter-connected with hi-speed data links. The control units are also connected to the visual display terminal (VDT) system on the control console, the vehicle control subsystems and via RS-485 data link.

TIMS is designed on a dual redundancy basis.

- Functions: This system has functions such as data collection and processing, management of vehicle subsystem and maintenance support
  1. Data collection and processing
     TIMS control unit collects the vehicle condition signals from subsystems and processes the data for management.
  2. Management of vehicle subsystem
     a. Auto Braking
     When any of the following faults is detected, which is critical to continue the operation, TIMS automatically directs the brake master controller to apply the service brake.
     - Trouble with power supply unit
     - Abnormality of levitating condition and related devices
     - Low trolley voltage

     b. Acceleration Inhibition
     Brake commands (ATP brake, automatic brake, emergency brake) supersede any other inconsistent commands such as acceleration command.

     c. Levitation Inhibition
     Vehicle will not levitate until TIMS confirms the air spring and levitation power sources are normal.

     d. Vehicle Control Panel Indicator
     Levitation completed and door closed are displayed at the vehicle control panel indicator.

- Maintenance support
  TIMS automatically conducts checks including pre-departure checks. TIMS is also collecting the data of major components for the regular inspections and the maintenance work.

Visual Display Terminal (VDT)
The function of this equipment is to acquire data, diagnose data, and display the result. This equipment receives the vehicle condition data from TIMS control unit and displays it on the display panel of the control console.

The following additional information for the operation are displayed:
- Levitation condition
- Door open-close condition
- States of various systems
- Present time

A memory card is installed for OFF-LINE fault data diagnosis.

1.3.13 Pneumatic System

The pneumatic system is used to supply pneumatic power for the air suspension system, door pneumatic system and high-speed circuit breaker.

Pneumatic Power System

The pneumatic power system consists of the air compressor, after cooler, main air reservoir, drain valve, pressure relief valve and the check valve. The pressure of the main air reservoir is set at 9 kg-f/cm^2 (128 psi). In case where the pressure of the main air reservoir exceeds 9 kg-f/cm^2 ,due to air compressor control system failure, the pressure relief valve operates at 9.7 kg-f/cm^2 (138 psi) to protect the reservoir.

The train is equipped with the one pneumatic power system per three cars. The air compressor, after the cooler and main air reservoirs, are installed in the middle car.

Refer to **Figure 1-11** for pneumatic power system schematic:

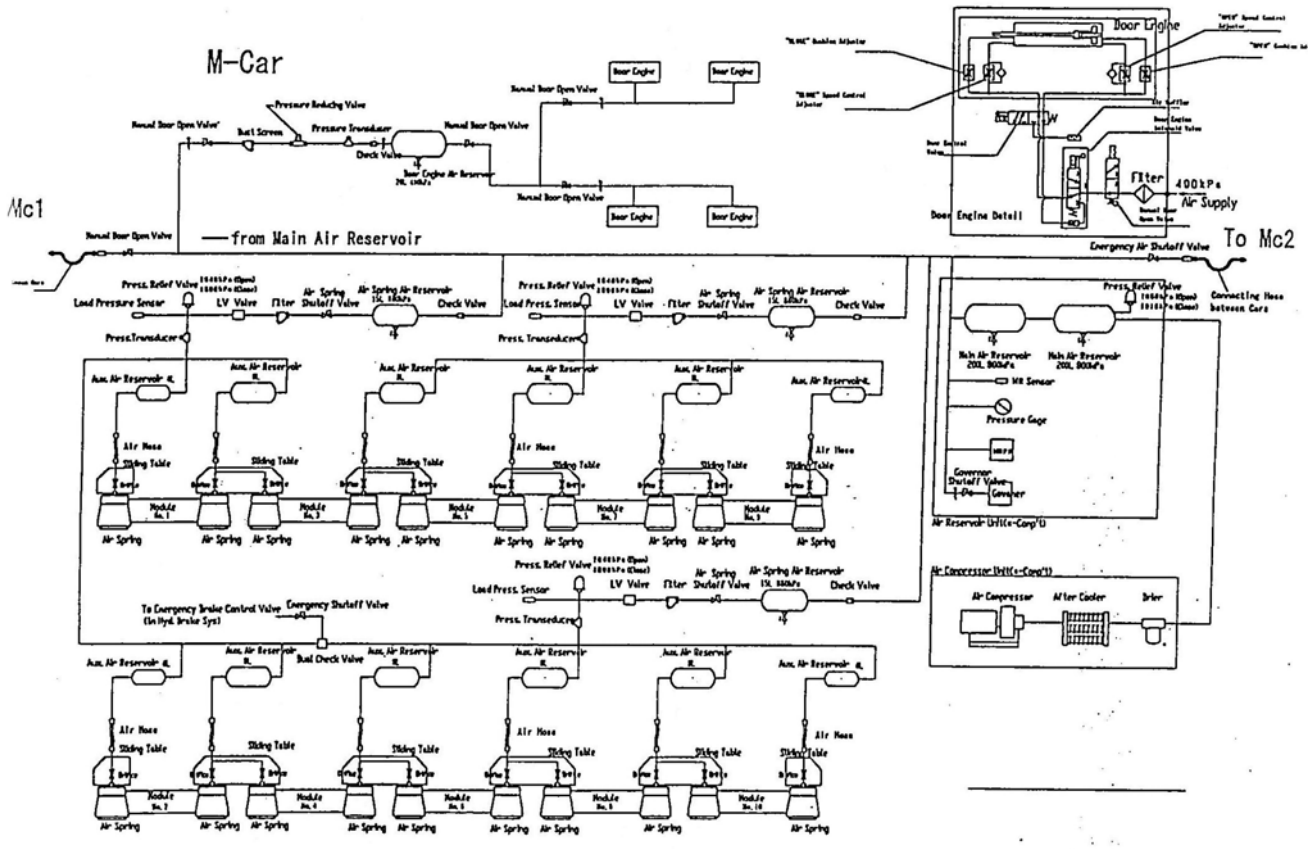

Figure 1-11 Pneumatic Power System Schematic

Door Pneumatic System

The door pneumatic system consists of the pressure regulator, check valve, door motor air reservoir, door engine solenoid valve, and the door motor.

Refer to **Figure 1-12** for door pneumatic system schematic

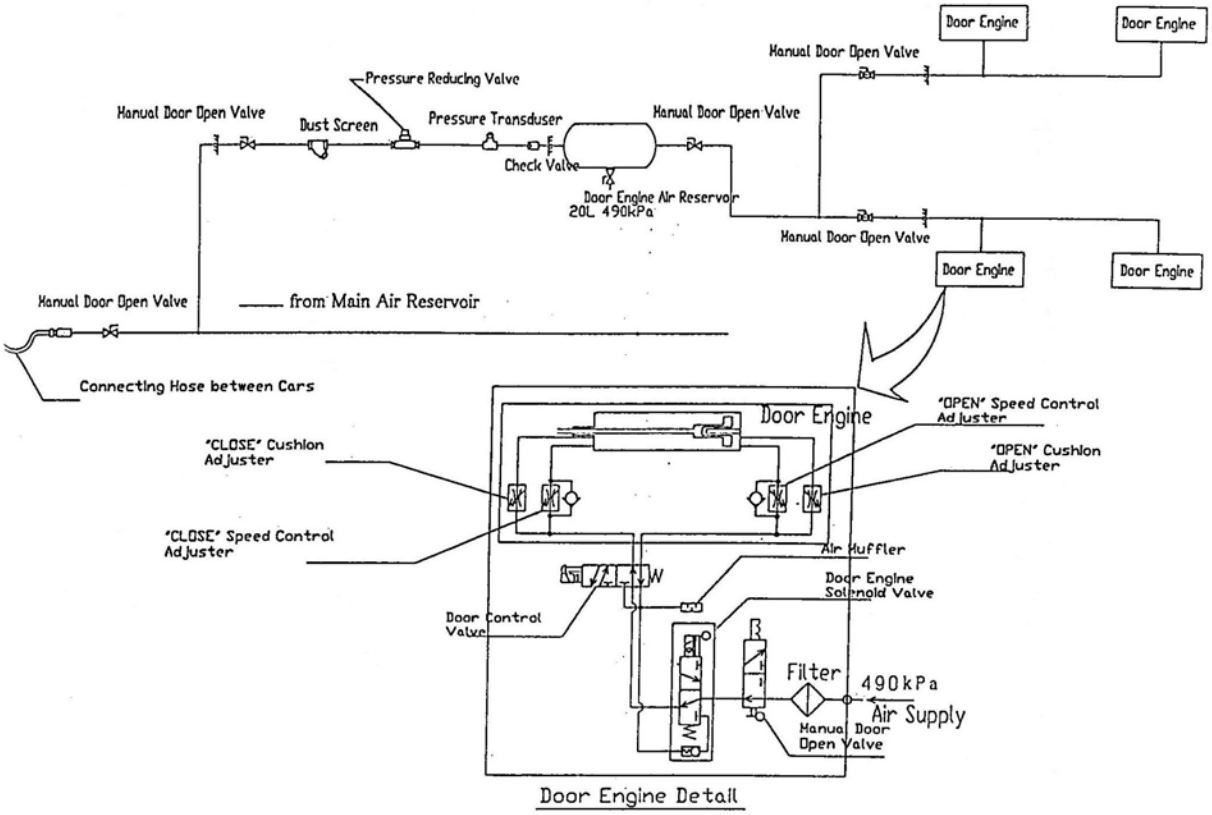

Figure 1-12 Door Pneumatic System Schematic

Door Control System

- Two doors are installed on each side of car.
- Doors are externally installed and are bi-parting slide type.
- Under normal circumstances, pneumatic power is used to "open" and "close" the doors.
- Applicable pneumatic pressure is 5 kg-f/cm^2 (71 psi).
- In un-manned automatic operation mode, the door control unit receives the "door open/close" command from ATP and controls the valve to open or close the door at a platform automatically. The "Door Open/Close" switch on the driver's console is also available to control the doors manually.

- Other functions of the unit are:
  1. Doors re-open upon sensing an obstruction between the bi-parting doors
  2. Emergency brake to be applied when the doors abnormally open
  3. Inhibit propulsion when any door open

1.3.14 Communication Subsystem (On-Board)

On-Board Public Access System

The on-board public access (PA) system is provided to make live voice announcements and to give information/instructions to passengers under normal or emergency situations. During un-manned automatic operation, the Central Control Operator can give an announcement to the passengers via the radio subsystem.

Emergency Information System

The emergency information system can establish a voice communication line between the control consoles of the driver and call station in the cabin, where the emergency call by a passenger is emitted. During an un-manned automatic operation, the Central Control Operator can communicate with the passengers in the cabin via the radio subsystem.

Operation and Maintenance Radio

The operations and maintenance radio subsystem provides the means for the Central Control Operator to communicate with the train operators as they travel along the guideway, and to the maintenance personnel as they perform their duties along the guideway or in the maintenance facility. A base station will be located at the control center.

Data Communication System

Train data such as equipment failure and system condition is transmitted to the Control Center. During an un-manned automatic operation, the Central Control Operator can remotely control vehicle functions such as levitation, re-start, and extension of the emergency rollers via this data communication system.

1.3.15 Signaling System On-Board

The on-board ATC system consists of automatic train protection, train detection, automatic train operation, and velocity detection system.

Automatic Train Protection (ATP)

The ATP equipment continuously provides the train with speed limit information by using an ATP/TD loop for each block laid on the guideway. The ATP/TD loop transmits the aspect signal to the train. A high frequency carrier wave is used for the transmission of the aspect signal from the ATP/TD loop to the train. Main functions of on-board unit are:

- Over speed protection
- Cab signal indication for Manual Operation
- Train berthed verification
- Vehicle door control
- Direction change in Automatic Operation

Refer to **Figure 1-13** for signaling system.

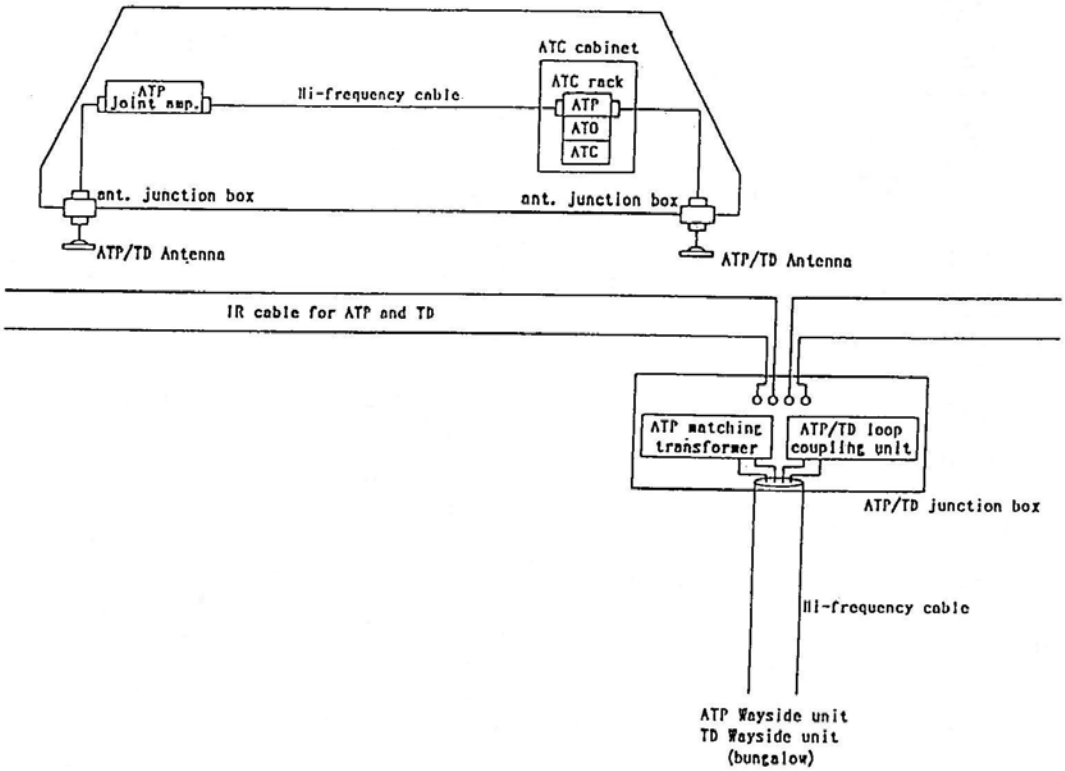

Figure 1-13 Signal System (ATP /TD)

Train Detection System (TD)

The TD subsystem continuously detects the presence of the train and sends its location to the control center. TD system shares the ATP/TD loop for each block with ATP system. Each train continuously transmits the check-in signal (from head car) and the checkout signal (from end car) to the ATP/TD loop. The train position signal received by the wayside equipment is indicated on the display board at the control center, and is also sent to the ATP system.

Automatic Train Operation (ATO)

The ATO subsystem receives speed limit commands from the ATP subsystem. These inputs and the train's running profile are used for the automatic speed regulation with the velocity detection system providing a feedback vehicle speed signal to regulate the train's speed.
Main functions of the on-board unit are:

- Speed Regulation
- Programmed Station Stop

Velocity Detection System (VEL)

The VEL equipment, which has the function of detecting train speed at cab, receives the velocity detection signal from an inductive radio (IR) transmission cable installed along the track. Then it computes the running distance and speed from the received data, and sends outputs to ATP control, speed-meter, and VVVF inverter. The speed signals are received from the IR cable through a three-coil antenna.

The main functions of on-board unit are:

- Train speed detection
- Zero speed detection
- Reverse running detection

Refer to **Figure 1-14**.

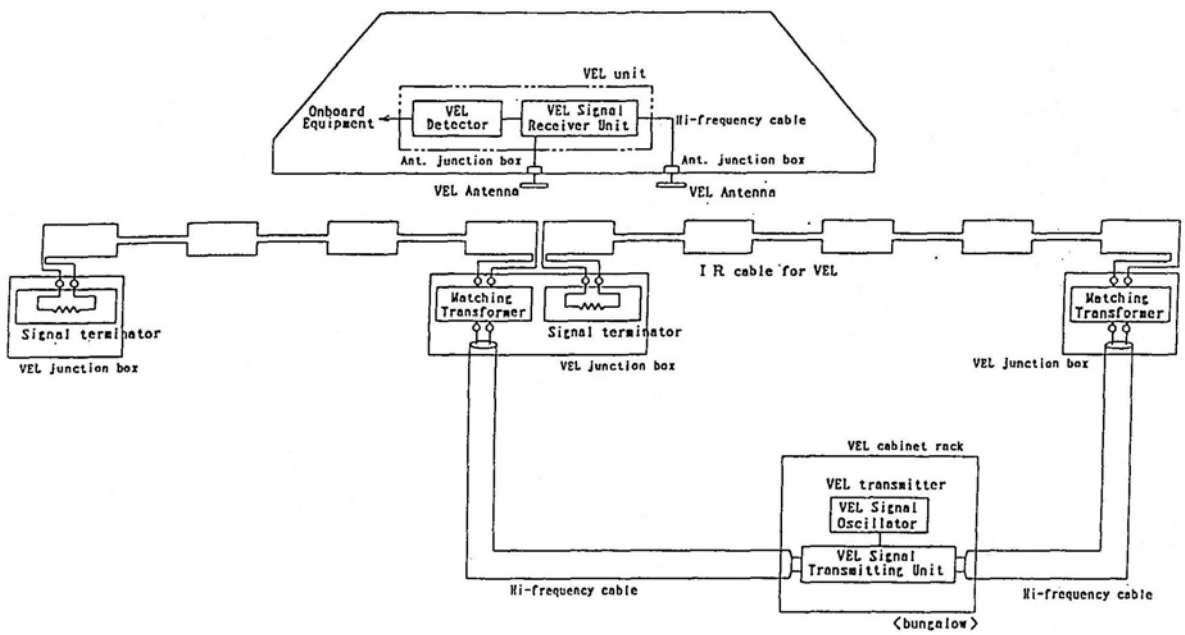

Figure 1 - 14 Signaling System (VEL)

The systems performance characteristics for this 100L vehicle are summarized in Table 1-1.

Table 1-1 Summary of System Characteristics

Operational Characteristics	
Max. Operation Speed	100 km/h (62.1 mph)
Max. Initial Acceleration	4.0 km/h/s (2.5 mph/s)
Max. Deceleration	
Service Brake	4.0 km/h/s (2.5 mph/s)
Emergency Brake	4.5 km/h/s (2.8 mph/s)
Max. Gradient	7%
Min. Horizontal Curve Radius	Side line track 50 m (164 ft)
	Main line track 75 m (246 ft)
Min. Vertical Curve Radius	1,500 m (4,921 ft)
Max. Super Elevation Angle	8 degrees
Passenger Capacity for Three-Car Train	Seated Standing Total
	104 144 248
	0.3 sq m/standee (465 sq in.)
Temperature	- 10°C to 40°C (50°F to 104°F)
Max. Wind Velocity	25 m/sec (60 mph)
	Structure is designed for 50 m/sec (112 mph) wind
Vehicle Configuration	
Train Type and Formation	
(1) Vehicle Type	HSST-100L
(2) Train Formation	Cars: Mcl, M & Mc2
Vehicle Dimensions	
(1) Car Body Length	14 m (45'-11") for Mc car
	13.5 m (44'-4") for M car
(2) Width:	2.6 m (8'- 6")
(3) Height:	3.45 m (11'-3")
(4) Rail Gauge	1.7 m (5'-7")
Vehicle Weight	
(1) Empty	17,500 kg/car (38,580 lbs/car)
(2) Fully Loaded (AW2)	28,000 kg/car (61,728. lbs/car)
Car Body Structure	
(1) Material	High strength aluminum alloy
(2) Construction	Semi-monocoque
(3) Doors	2 bi-parting sliding external doors / side /car
(4) Couplers	Fixed connection between cars.

Tight-lock type automatic mechanical coupler for train ends.
Equipment and Furnishing
Air Conditioning
(1) Conventional Cooling System (2 sets per car mounted on roof) with 15,000 kcal/car
(59,525 BTU/car).
(2) Warming System (Electric heater type) for passenger seats (approx. 300 W/man) and operator.
(3) Ventilation System
Levitation and Guidance System
(1) Magnet Ferro-magnet for levitation and guidance
(electromagnets, not super conducting)
(2) Levitation Gap 6 mm (0.24") mechanical gap
8 mm (0.32") magnetic gap
(5) Propulsion System
(1) LIM (Linear Induction Motor)
Quantity 10 LIMs per car
Total Length 1,800 mm (5'-11") per one LIM
Secondary Reaction plate (Aluminum plate on rail)
(2) Power Supply/Control
Quantity 2 system (per 3-car unit)
Max Capacity 1,500 kVA per 3 car unit
Type VVVF inverter
(2) Suspension System
(1) Suspension Module 5 flexible pair-modules per car
(Module: levitation bogie trucks)
(2) Module Frame Aluminum alloy
(3) Secondary Suspension Air suspension
(7) Brake System
(1) Service Brake Combination of LIM brake (regenerative
Or reverse phase) and hydraulic brake
(Mechanical friction brake)
(2) Emergency Brake Hydraulic brake
(3) Parking Brake Skids (levitation cut off)
(4) Hydraulic Pressure 210 kg-f/sq cm (2,986 psi)
Modules
No. of Modules Ten modules per car (five on each side of the car)
Emergency Roller System
Hydraulic system consists of a solenoid operating valve, a check valve, a restrictor, 10 self-sealing couplings and 40 hydraulic actuators/car.
Electrical Power Supply 1,500 V DC from two rigid trolley rails

Electrical Power System (On-Board)
(1) Current Collector Unit
Quantity 4 pairs (positive, negative) per 3 car unit
Type Slide contacting "Z" type, spring pressed
Collected Power 1,500 V DC from two rigid trolley rails
(2) PSU (Power Supply Unit-Auxiliary Power Unit)
Quantity 2 units per 3 car unit
Capacity (Nominal) 85 kW per unit
PSU Output 275 V DC, 100V DC, 100V AC (1φ60 Hz)
(3) Back-up Batteries 275 V DC, 20 A-h per 2 car unit
Vehicle Control System
(1) Un-manned Automated train Operation
(2) One handle Type Master Control Lever for Manual Train Operation
Pneumatic System
(1) Pneumatically actuated equipment
- Bi-parting sliding external doors
- Air suspension system
- DC contactors
(2) System Air Pressure (nominal) 9 kg-f/sq cm (128 psi)
Signaling System (On-Board)
(1) Train Protection Automatic train protection with cab-signal
(2) Train Detection check-in check-out method

2 COMPARISON OF CHUBU HSST SYSTEM PERFORMANCE CHARACTERISTICS WITH U.S. PERFORMANCE REQUIREMENTS

This chapter expands upon the information provided in Chapter 1 by documenting the U.S. maglev system performance requirements as defined in applicable codes and standards and comparing the Chubu-HSST system performance characteristics to the applicable U.S. system performance requirements. The comparison identifies each Chubu-HSST system characteristics and specifications to be either compliant to the U.S. system performance requirements or require further improvement and /or further study. Additionally, this chapter includes the top-level system requirements as defined in the *Federal Transit Administration Low Speed Maglev Technology Development Program General Requirements Document* (August 2001). Comparison of the Chubu-HSST system with the FTA requirements is also provided in this chapter.

2.1 REQUIRED PERFORMANCE CHARACTERISTICS IN THE U.S.

Within the mass transit industry marketplace, the most likely and the best candidate for the application of the Chubu-HSST maglev system is as an Automated People Mover (APM). The Chubu-HSST system has characteristics to rival other transit modes such as the light rail system in terms of capacity, but its required dedicated guideway more directly relates it to an APM. There are no published codes, guidelines or standards for urban magnetic levitation systems in the United States. Therefore, the Chubu-HSST system is best compared to the U.S. performance characteristics compiled from the existing Automated People Mover system (APM) standards and criteria. The main difference between the Chubu-HSST maglev system and existing APM system technologies is the method of guiding, suspending and propelling the vehicle. Other requirements such as the safety and system assurance, train control, communications, power, guideway loading, and station platform layout are common to both conventional APMs and the Chubu-HSST maglev system.

The American Society of Civil Engineers (ASCE) recently developed standards for the APM industry. Some of these standards have already been published, and adopted by a number of municipal authorities. Other standards are still in the draft stages of development. These developed and draft standards will be used as the primary source of requirements with which to compare the characteristics of the Chubu-HSST system. Other established references in the industry are also referred herein for specific technical areas such as safety, automatic train control, and electromagnetic exposure.

The standards that have been reviewed and are referenced in this analysis include:

1. ASCE 21-96, ASCE APM Standard Part 1.
2. ASCE 21-98, ASCE APM Standard Part 2.
3. ASCE 21-00, ASCE APM Standard Part 3.
4. NFPA 130: National Fire Protection Association, Inc., Standard for Fixed Guideway Transit and Passenger Rail Systems, 2000 Edition.
5. IEEE 1474.1 – 1999: Institute of Electrical and Electronic Engineers, Standard for Communications-Based Train Control (CBTC) Performance and Functional Requirements.

6. 49 CFR Part 38 ADA Accessibility Specifications for Transportation Vehicles, Rev. Oct.1, 1997.
7. 28 CFR Part 36 ADA Standards for Accessible Design,: ADA Accessibility Guidelines for Buildings and Facilities, Rev. July 1, 1994.
8. 49 CFR Part 659: Rail Fixed Guideway Systems: State Safety Oversight.
9. DOT-FTA-MA-90-5006-00-1/ DOT-VNTSC-FTA-00-03 Compliance Guidelines for States with New Starts Projects, June 2000.
10. FTA VNTSC Transit Security Handbook, March 2, 1998.
11. DOT-FTA-MA-26-5005-00-01/DOT-VNTSC-FTA-00-01 Hazard Analysis Guidelines for Transit Projects.
12. 2001 Threshold Limit Values (TLVs) for Chemical Substances and Physical Agents, Biological Exposures Indices (BEIs), by the American Conference of Governmental Industrial Hygienists.
13. APTA SS-E-010-98, Standard for the Development of an Electromagnetic Compatibility Plan.
14. CENELEC PrEN 50121-4 Specification: Railway Applications – Electromagnetic Compatibility – Part 4: Emission and immunity of the signaling and telecommunications apparatus.
15. National Electrical Code, National Fire Protection Association.
16. General Requirements Document, Low Speed Maglev Technology Program, Federal Transit Administration, August 2001.

The above listing is not inclusive of every code and standards that are applicable. The intent of the listing is to address particular or unique standards that apply to the generic type of system that is being examined – an automated, low speed, magnetically levitated transit system. Some of more widely used codes and standards, such as the NEC, UBC, ASTM and ANSI, were not listed but also must be satisfied.

2.2 COMPARISON OF U.S. CODES AND STANDARDS AND CHUBU-HSST PERFORMANCE CHARACTERISTICS

The **Maglev System Standards and Codes Comparison Table** presents an extensive listing of system and subsystem characteristics that are considered typical to an automated magnetically levitated transit system and applicable from the above listing of references.

The Comparison Table consists of six (6) columns: (1) System & Subsystem Characteristics, (2) U.S. Standard/Code Requirements, (3) U.S. Reference designation, (4) CHUBU HSST System Characteristics, (5) CHUBU HSST Compliance with U.S. Standard/Code, and (6) CHUBU HSST Compliance with FTA top-level system requirements.

<u>Column 1: System & Subsystem Characteristics</u> is a listing of the particular system characteristics that should be included in this analysis. In developing the system characteristics listing, a particular attention was given to those characteristics typical to most systems. Since the intent of this Task is to assess its general applicability to the U.S. marketplace, only those characteristics that are included in the referenced standards and codes have been used in the comparison. Detailed discussion and analysis of the other characteristics, many of which are included in the Table, will be presented in upcoming reports.

Column 2: U.S. Standard/Code Requirements is the U.S. standard or code that must be satisfied. In some locations, the notation "NAS" or "Not a Standard" is used to note that there is no standard or code that requires addressing in the design of a transit system or that an applicable standard or code has not been included in this listing.

Column 3: U.S. Reference identifies the reference material corresponding to Column 2. Reference material is indicated by a number (1 through 16) and corresponds to the list of reference at the end of the Table.

Column 4: CHUBU HSST System Characteristics identifies CHUBU HSST system and subsystem characteristics as presented in detail in Chapter 1.

When reviewing the characteristics, there are a number of observations that should be noted. For example, guideway and station facility requirements or criteria will depend on the regional and site specific requirements for seismic or wind load criteria.

In a similar manner, there are requirements for the vehicles and other system elements that can easily be met during the detailed design for a particular application that may or may not be implemented in the existing vehicle. As an example, purchasing and installing the conforming materials can satisfy the windshield strength and seat flammability requirements. At the time of purchasing of the various components, local suppliers will be aware of what materials conform to the specific requirements, especially the large vehicle manufacturers who supply rolling stock around the world.

Column 5: CHUBU HSST Compliance shows the result of comparing Column 4 with Column 2 (comparison of CHUBU HSST system characteristics with the **U.S**. requirements). The result will be either Yes, No, Will Comply, TBD, or N/A. "Yes" and "No" are self-explanatory. "Will Comply" indicates that the system characteristic will be addressed in detail during design or component procurement. "TBD" (To Be Determined) indicates that the information has not been addressed or verified as yet, or the information is still being researched by the MUSA Team and will be updated at a future time. "N/A" (Not Applicable) is used for those characteristics that are not required by a standard or code.

Column 6: CHUBU HSST Compliance with FTA shows the result of comparing Column 4 with the FTA system requirements listed in Column 2 (comparison of CHUBU HSST system characteristics with the **FTA** top-level system requirements). The result will be either Yes, No, Will Comply, TBD, N/A, or Site Specific. Site Specific means that the FTA requirement is site specific and evaluation of the CHUBU HSST system cannot be made at this time. For other result designation, refer to "Column 5" above.

At this time, there are no Chubu-HSST system characteristics that have been identified as not meeting the cited **U.S.** Codes and Standards. However, there are a number of characteristics that have been classified as TBD. These items are presently being investigated by the Team and will be addressed to the greatest extent possible in a revision to this document.

2.3 IDENTIFY ISSUES TO BE ENHANCED TO IMPLEMENT CHUBU-HSST SYSTEM IN THE U.S.

System characteristics, which are under investigation or research regarding compliance to the cited U.S. Codes and Standards, will eventually demonstrate compliance to the required codes and standards. Once the information becomes available, many of these will be shown as “Yes” or “Will Comply.” Some of the characteristics that have been given the designation “Will Comply” pertain to subsystems that are under investigation as part of other tasks during this phase of the project. In this case, to the extent practical, the investigation efforts will address these items as well, and the results will be addressed in subsequent reports. Those items that have been designated as “Will Comply” that pertain to subsystem elements that are not subjects of further investigation during this phase of the project, will be addressed by the team in later phases as appropriate.

Table 2-1 Maglev System Standards and Code Comparison

System & Subsystem Characteristics	U.S. Standard / Code Requirement	U.S. Ref.	CHUBU HSST System Characteristics	CHUBU HSST Compliance	CHUBU HSST Compliance With FTA
1. SYSTEM CHARACTERISTICS	-	-	-	-	
System Performance and Operations Requirements	-	-	-	-	
Vehicle Characteristics	-	-	-	-	
Dimensions – Length, Width, Height	Not a standard.	-	Car body length: 14 m (45'-11") for Mc car; 13.5 m (44'-4") for M car. Width: 2.6 m (8'-6") Height: 3.45 m (11'-3") Rail Gauge: 1.7 m (5'-7")	N/A	
Weight - AW0, AW1, AW2, AW3	Calculation method: AW0 – empty AW1 – AW0+Design Load [e.g. 712N (160 lb) per passenger x design capacity] AW2 – maximum operating load = AW0+ 712N (160lb) per passenger x Max. number of Passengers, if load weighing. If not load weighing, AW2=AW3 AW3 – crush load = AW0 plus 5,120N/m^2 (107 lb/ft^2) times the standee floor space plus 712N (160lb) per seat multiplied by the number of seats	2	AW0 (Empty): 17,300 kg/car (38,580 lbs/car) AW2 (Fully Loaded): 28,000 kg/car (61,728 lbs/car) Crush loaded: 0.14 sq m/standee or 1.51 sq ft/standee; hence density of 0.662 standees per sq ft. APM crush load density is: 107/160= 0.69 standees per sq ft.	N/A. APM crush load density (standees per sq ft) similar to CHSST.	
Capacity – Seated, AW0, AW1, AW2, AW3	Calculation method: Seat – 0.42m^2 (4.5ft^2)	2	Capacity for three-car train Seated: 104 Standing 144 Total: 248	N/A	

System & Subsystem Characteristics	U.S. Standard / Code Requirement	U.S. Ref.	CHUBU HSST System Characteristics	CHUBU HSST Compliance	CHUBU HSST Compliance With FTA
			0.3 sq m/standee (465 sq in.)		
Power Supply – Voltage, Propulsion Load, Levitation Load	Not a standard.	-	1,500 V DC from two rigid trolley rails	N/A	
Structural Design Load	Refer to 2.2.1	-	-	-	
Performance Limits	-	-	-	-	
1.1.2.1	Refer to 2.1.4.1	-	Max. initial acceleration: 4.0 km/h/s (2.5 mph/s)	-	
1.1.2.2	Refer to 2.1.3.3	-	Service break: 4.0 km/h/s (2.5 mph/s) Emergency break: 4.5 km/h/s (2.8 mph/s)	-	
Braking, Independent and Redundant	Dynamic, Mechanical, Emergency Brakes	16	Equipped with electric LIM and mechanical hydraulic brake system.		Yes
Braking, Deceleration Braking, Emergency	0.16 g (1.6 m/s^2, 3.57 mph/s) 0.32 g (3.1 m/s^2, 6.93 mph/s)	16 16	Refer to 1.1.2.2		No No
1.1.2.3	Refer to 2.1.4.1	-	-	-	
Cruise – Maximum Speed Speed, Maximum Operational Speed, Average	Not a Standard. 160 km/h (100 mph) 50 km/hr (31 mph)	- 16 16	Max. operating speed: 100 km/hr (62.1 mph)	N/A	 No Site Specific
1.1.2.5	Refer to 2.1.3.4	-	-	-	
1.1.2.6	Refer to 2.1.4.1	-	-	-	
System Capacity	-	-	-	-	
Passengers per hour per Direction (pphpd)	Not a Standard.	-	-	N/A	
Headway	Not a Standard.	-	-	N/A	
Passenger min. Waiting Time	Trip delay threshold of three	16			TBD

System & Subsystem Characteristics	U.S. Standard / Code Requirement	U.S. Ref.	CHUBU HSST System Characteristics	CHUBU HSST Compliance	CHUBU HSST Compliance With FTA
	minutes				
Train Length	Not a Standard.	-	Can be designed as 3 to 8 cars per consist. Currently 3 to 4 cars.	N/A	
System Design Considerations	-	-	-	-	
1.2.1	Refer to 2.1.5	-	-	-	
1.2.2	Interoperability interface requirements, among equipment produced by different suppliers.	*5*	-	Yes	
1.2.3	Modular design to minimize first level mean time to repair required, i.e., minimize the time to replace a failed piece of in-service equipment.	*5*	Modular design provided	Yes	
1.2.4	Equipment diagnostic provisions and built- in testing capabilities required	*5*	Diagnostic and testing capabilities provided	Yes	
1.2.5	Components and materials should be selected and appropriate standards of quality control and test procedures should be employed to assure the lowest practical hardware failure rates for individual items.	*5*	Principal structure, of which a failure could result in catastrophic damage to the vehicle, has fail-safe feature. Where such principal structural part does not satisfy the fail-safe criteria, high-reliability and durability design is used to minimize failure probability during the life of the structure.	Yes	
1.2.6	Unless non-redundant equipment is sufficiently reliable to satisfy	*5*	Will be tailored to dependability/ availability	Will Comply	

System & Subsystem Characteristics	U.S. Standard / Code Requirement	U.S. Ref.	CHUBU HSST System Characteristics	CHUBU HSST Compliance	CHUBU HSST Compliance With FTA
	the overall system availability requirements, appropriate levels of equipment redundancy should be employed such that the failure of a single component, processor or device will not render the system unavailable or an operationally critical function non-operative.		requirements set by the authority having jurisdiction. Currently, the number of 0.5-km trips completed without delay or delay not exceeding 3 minutes, as a percent of total number of trips: 27,489 / 27,506 x100 = 99.938.		
1.2.7	National Electric Code. Wiring Design & Protection; Wiring Methods & Materials	15	Will be assembled by car-builder with code-compliant components for US application.	Will Comply	
1.2.8	National Electric Code. Wiring Materials - Raceways & Boxes; Wiring Materials - Switches, Switchboards, & Panel boards; Conductors & Over-current Protection;	15	Will be assembled by car-builder with code-compliant components for US application.	Will Comply	
Environmental	-	-	-	-	
Airborne Noise	1- Vehicle entering/leaving station – 1.5 m from platform edge and 1.5 m above platform – 76 dBA (slow response) 2- Vehicle stopped in station – same locations – 74 dBA (slow response) 3- Under all operating conditions in a free field 15 m from guideway centerline and from 1.5 m above ground to 1.5 m above	*1*	Measurements with train on elevated guideway, noise measured at 10m from track centerline and 1.2 m above ground level, with IGBT (insulated gate bipolar transistor) inverter, measured less than 65 dBA at train speeds from 10 to 50 km/h. At distance of 2.5 m and	Yes	

System & Subsystem Characteristics	U.S. Standard / Code Requirement	U.S. Ref.	CHUBU HSST System Characteristics	CHUBU HSST Compliance	CHUBU HSST Compliance With FTA
Noise Level	guideway running surface – 76 dBA (fast response) ≤70 dBA (Goal), Outside 15.2 meters from guideway centerline	16	height 1.2 m above ground level, frequency response for IGBT inverter shows noise under 65 dBA for most of the frequency range of 0-10kHz, with a spike to 74 dBA at 2kHz.		Yes
Structure Borne Noise / Vibration	Imperceptible per ANSI-S3.29-1983	*1*	System-induced vibrations will not be perceptible at or in surrounding buildings.	Will Comply	
Pollutants	Tolerate existing conditions	*1*	-	Will Comply	
Ambient Weather Operating Conditions *Weather Operation* Ambient Temperature and Humidity	- All weather operation Max. operational temp. range of -32°C to 50°C (-26°F to 122°F) 95% non-condensing relative humidity at 30°C (86°F)	- 16 16 16	-	-	 Yes Will Comply Will Comply
Temperature	50 year highest and lowest	1	-10°C to 40°C (14°F to 104°F)	Will Comply	
Relative Humidity	Non-condensing 96% @ 30°C (86°F)	1	0% to 95% without dew condensation for electric equipment	Will Comply	
Precipitation (Rain, Sleet, Snow, Ice)	Designed to operate at rates consistent with historical data	1		Will Comply	
Ice	≤6 mm (0.25 inch)	16			TBD
Snow	≤300 mm/hr (12 inches/hr)	16			TBD
Rain	≤75 mm/hr (3 inches/hr)	16			TBD
Normal operations	Not a Standard	-	-	N/A	

System & Subsystem Characteristics	U.S. Standard / Code Requirement	U.S. Ref.	CHUBU HSST System Characteristics	CHUBU HSST Compliance	CHUBU HSST Compliance With FTA
Degraded/Manual Operations	Not a Standard	-	-	N/A	
System Survival	Not a Standard	-	-	N/A	
Wind	-	-	-	-	
Normal Operations	Not a Standard		Normal operations in wind gusts up to 72 kph (44.7 mph)	N/A	
Degraded/Manual Operations	Not a Standard		Generally, 30m/sec (98.4 ft/sec, 67.1 mph) for vehicle design, 25 m/sec (82.0 ft/sec, 56 mph) for train operation. When wind speed exceeds 20 m/sec (45 mph) degraded operations would be declared. Degraded operations will be halted at 56mph.	N/A	
System Survival Wind	Max wind per local building codes Operational threshold up to 50 km/h (30 mph) Ride comfort threshold up to 80 km/h (50 mph) Structural threshold up to 160 km/h (100 mph)	1 16 16 16	Structure is designed for 50 m/sec (112 mph) wind	Will Comply	 Yes TBD Yes
Lightning Protection	Where required - UL96A 10th edition – Requirements for lightning protection systems	*1, 16*		Will Comply	Will Comply
Electromagnetic Compatibility	-	-	-	-	
Electromagnetic Background	Operate in environment at site in	1	There is no EMI problem	Will Comply	

System & Subsystem Characteristics	U.S. Standard / Code Requirement	U.S. Ref.	CHUBU HSST System Characteristics	CHUBU HSST Compliance	CHUBU HSST Compliance With FTA
	accordance w/ MIL-STD-461D – Requirements for the Control of Electromagnetic Emission and Susceptibility. All wayside and train borne equipment shall be electromagnetically compatible within themselves, with all trains and train equipment in operation within the system-territory, and with all other electrical and electronic equipment along the right of way, including but not limited to, traction power supply/ controls, voice communication, and other signaling and telemetry systems.	5	among onboard electrical equipment, trolley feeding system and inductive radio system. No other technical data on EMI is available.		
Electromagnetic Radiation	Compatible w/ environment – shall not produce emissions that interfere with normal operation of electromagnetic devices An Electromagnetic Compatibility Control Plan shall be prepared to document a program for achieving and providing evidence of electromagnetic compatibility. For further information on this subject, refer to APTA SS-E-010-98, Standard for the Development of an Electromagnetic	1,5 13 14	There is no EMI problem among onboard electrical equipment, trolley feeding system and inductive radio system. No other technical data on EMI is available.	Will comply	

System & Subsystem Characteristics	U.S. Standard / Code Requirement	U.S. Ref.	CHUBU HSST System Characteristics	CHUBU HSST Compliance	CHUBU HSST Compliance With FTA
	Compatibility Plan and the CENELEC PrEN 50121-4 specification.				
FCC Rules and Regulations	CFR Title 47 Chapter 1, Part 90, Private Land Mobile Radio Services, subparts S and T; and the interference requirements defined in Title 47, Chapter 1, Part 15, Radio Frequency Devices.	1	-	Will Comply	
Static Magnetic Field – Public Allowable (Medical Electronic Device Wearers)	5 Gauss Ceiling	12, 16	HSST 100L: At the vehicle floor level ranges between 5.7 G above the Linear Motor, to 9.6 G above the DC filter reactor. At 55 cm (22 in.) above the floor, static magnetic field is below 5 Gauss. Outside the passenger compartment, max. 2.58 Gauss 1 m on the side of the Module.	Will Comply	Will Comply
AC Magnetic Field – Public Allowable (Medical Electronic Device Wearers)	50 to 60 Hz = 1 Gauss Ceiling 1 Hz to 300 Hz = 60 Gauss/ Freq (Hz) Ceiling	12, 16	Peak value at 60 Hz, 0.233 Gauss at the floor, 25.6 milli-Gauss at 55 cm above the floor	Yes	Yes
AC Electric Field – Public Allowable (Medical Electronic Device Wearers) AC Electric Field, Public Allowable	0.625 kV/m Permissible exposure = 1 kV/m	12 16	There has been no need to measure AC electric field because the vehicle system has no AC high voltage circuits. Maximum voltage is DC 1500V.	Yes	 Yes

System & Subsystem Characteristics	U.S. Standard / Code Requirement	U.S. Ref.	CHUBU HSST System Characteristics	CHUBU HSST Compliance	CHUBU HSST Compliance With FTA
Static Magnetic Field – Occupational Allowable (Routine Occupational Exposure) Static Magnetic Field, Public Allowable	600 Gauss 8-hour time weighted average for whole body 6,000 Gauss 8-hour time weighted average for arms and legs only. Permissible exposure = 2000 Gauss continuous and 20,000 Gauss short-term and 50,000 Gauss for arms and legs.	12 16	Occupational exposure to static magnetic field will not be exceeded with results shown in 1.3.6.4.	Will Comply	 TBD
AC Magnetic Field – Occupational Allowable 1Hz to 300Hz AC Magnetic Field 1 Hz to 294 Hz, Occupational Allowance	1 Hz to 300 Hz = 600 Gauss/ Freq (Hz) for whole body 1 Hz to 300 Hz = 3,000 Gauss/ Freq (Hz) for arms and legs only Permissible exposure = 600 Gauss/Freq. in Hz and 3000 Gauss Freq. in Hz for arms and legs.	12 16	Measurements in the range 1Hz to 100 HZ for IGBT inverter show AC magnetic field below 1 Gauss at all frequencies.	Yes	 Yes
AC Electric Field – Occupational Allowable AC Electric Field, Occupational Allowable	0 Hz (DC) to 100 Hz = 25 kV/m Ceiling 100 Hz to 4 kHz = 2,500kV/m /Freq (Hz) Ceiling 4 kHz to 30 kHz = 0.625 kV/m Ceiling Permissible exposure = 25 kV/m	12 16	There has been no need to measure AC electric field because the vehicle system has no AC high voltage circuits. Maximum voltage is DC 1500V.	Yes	 Yes
System Safety and Security (Reference Standards)	-	-	-	-	
System Safety Program Plan	*Required*	1, 5, 8,9	System Safety Program Plan compliant with FTA	Will Comply	

System & Subsystem Characteristics	U.S. Standard / Code Requirement	U.S. Ref.	CHUBU HSST System Characteristics	CHUBU HSST Compliance	CHUBU HSST Compliance With FTA
			requirements and APTA Guidelines will be implemented in a US application of the CHSST.		
Safety Management	*Meet system safety requirements of both ASCE 21-96 Chap. 3 and IEEE Std. 1474.1-1999 Para. 5.3.*	16	-		Will Comply
Safety Goal	*<0.1 incidents/million passenger miles <0.1 injuries/million passenger miles, zero fatalities*	16	-		Will Comply w/ Goal
Security, Vehicle	*Create security plan - Audio and visual, communications, lighting, guards, etc.*		-		Will Comply
Security, Station	*Create security plan - Audio and visual, communications, lighting, guards, fencing, etc.*	16	-		Will Comply
System Security Program Plan	*Required per 49 CFR 659.33*	16	-		Will Comply
Fail-safe Design Principles	Required for ATC system	1,5	ATC system designed with fail safe design principles. A comprehensive set of safety analyses, failure modes and effects analyses, etc., documenting fail-safe design per US standards, is currently not available. Will be developed in a US application of the CHSST, as part of the system safety program.	Will comply	
Preliminary Hazard Analysis	Required	1,11	System Safety Program Plan compliant with FTA	Will comply	

System & Subsystem Characteristics	U.S. Standard / Code Requirement	U.S. Ref.	CHUBU HSST System Characteristics	CHUBU HSST Compliance	CHUBU HSST Compliance With FTA
			requirements and APTA Guidelines, including documentation of PHA, will be implemented in a US application of the CHSST.		
Operating Hazard Analysis	Required	1,11	System Safety Program Plan compliant with FTA requirements and APTA Guidelines, including documentation of OHA, will be implemented in a US application of the CHSST.	Will comply	
Fault Tree Analysis	May be required for certain safety-critical systems such as train control.	11	System Safety Program Plan compliant with FTA requirements and APTA Guidelines, including documentation of Fault Tree Analysis, where required, will be implemented in a US application of the CHSST.	Will comply	
Failure Modes and Effects Analysis	Required	11	System Safety Program Plan compliant with FTA requirements and APTA Guidelines, including documentation of FMEA, will be implemented in a US application of the CHSST.	Will comply	
Emergency Provisions	-	-	-	-	
Vehicle Emergency Egress	Emergency exits from side or end doors	4	Emergency exits from side or end doors available.	Yes	
Guideway Emergency Egress	Emergency walkway along the	4	All guideway requirements	Will comply	

System & Subsystem Characteristics	U.S. Standard / Code Requirement	U.S. Ref.	CHUBU HSST System Characteristics	CHUBU HSST Compliance	CHUBU HSST Compliance With FTA
	guideway. Illuminated.		for US revenue service will be implemented in a US application of the CHSST.		
Disabled Vehicle Emergency Provisions Vehicle Recovery	Not a Standard Push Recovery	-	- Vehicle is equipped with an emergency roller system incase the levitation function is fully or partially lost.	N/A	Yes
Monitoring Conditions on System	-	-	Train data such as equipment failure and system condition is transmitted to the Control Center. During an un-manned automatic operation, the Central Control Operator can remotely control vehicle functions such as levitation, re-start, and extension of the emergency rollers via this data communication system.	-	
Smoke & Fire Alarms in Vehicles and Stations	Vehicle portable fire extinguisher. Vehicle communications system between passengers and Central Supervising Station. NFPA 130 (5-6). Stations Fire Protection in accordance with NFPA 130 (2-7).	4	Vehicle portable fire extinguisher and vehicle communications system between passengers and Central Supervising Station are available. All station requirements for US revenue service will be implemented in a US	Vehicle, Yes Stations, Will Comply	

System & Subsystem Characteristics	U.S. Standard / Code Requirement	U.S. Ref.	CHUBU HSST System Characteristics	CHUBU HSST Compliance	CHUBU HSST Compliance With FTA
			application of the CHSST.		
Controlled Access Security System	Per Security Program Plan	8,10	Controlled access per FTA-compliant security program plan will be implemented in a US application of CHSST.	Will comply	
Blue Light Stations	Per NFPA 130 (3-1.5)	4	Guideway requirements for US revenue service will be implemented in a US application of the CHSST.	Will Comply	
1.4.9 ADA Compliance	Facilities and Vehicles-compliance required.	6,7	Barrier Free Requirements in accordance with Japanese "Transportation Barrier Free Law", similar to ADA, are applicable to CHSST vehicle in Japanese revenue service. ADA requirements for US revenue service for both vehicles and facilities will be implemented in a US application of the CHSST.	Will Comply	
Accessibility Standards	Americans with Disabilities Act	16			Will Comply
System Dependability	-	-	-	-	
Reliability	Not a Standard	-	For the HSST-100L vehicle during total cumulative lifetime 123,822 vehicle-km, 3 failures of "loss of	N/A	

System & Subsystem Characteristics	U.S. Standard / Code Requirement	U.S. Ref.	CHUBU HSST System Characteristics	CHUBU HSST Compliance	CHUBU HSST Compliance With FTA
			levitation" occurred, yielding an average of 41,274 vehicle-km mean distance between failures (MDBF).		
Reliability, Vehicle Goal	MTBF=7,300 hours (minimum one year between failures)	16	-		TBD
Maintainability	Not a Standard	-	-	N/A	
Maintainability Target	MTTR (first level) < 30 min. MTTR (second level) < 2 hours	16	-		TBD
Availability	Not a Standard	-	Currently, the number of 1.5-km trips completed without delay or delay not exceeding 3 minutes, as a percent of total number of trips: 27,489 / 27,506 x100 = 99.938.	N/A	
Availability Goal	>99.99% - 20 hrs/day, 365 days per year	16	-		TBD
Elderly and Handicapped Accommodations	-	-	-	-	
Vehicle Interior	*Aisle width between seats, stanchions and handrails etc shall be at least 82 cm (32 in) wide to allow wheelchair access.* Priority seating signs designating seats for disabled – sign characteristics defined	*2,6*	Japanese "Transportation Barrier Free Law": Effective aisle width for wheelchair should be more than 80 cm (31.5 inches). ADA requirements for US revenue service for both vehicles and facilities will be implemented in a US application of the CHSST.	Will Comply	

System & Subsystem Characteristics	U.S. Standard / Code Requirement	U.S. Ref.	CHUBU HSST System Characteristics	CHUBU HSST Compliance	CHUBU HSST Compliance With FTA
Door Openings	Side Doors fully open shall provide 82cm (32in.) clear opening.	*1,2,6*	Japanese "Transportation Barrier Free Law": Effective width of at least one door should be not less than 80 cm (31.5 inches). ADA requirements for US revenue service for both vehicles and facilities will be implemented in a US application of the CHSST.	Will Comply	
Vehicle Station Interface	-	-	-	-	
1.6.3.1 Gap – Both Horizontal and Vertical	51mm (2.0in) horizontal [Ref.2]; 76mm (3.0in) if Vehicle speed >20mph [Ref. 6]. +/-16mm (0.625in) vertical.	2, 6	The horizontal gap between vehicle gauge and construction clearance of platform is 70 mm (2.76 inches). The gap between the vehicle gauge and vehicle dynamic envelope is 62 mm (2.44 inches). 36 mm (1.4 inches) is the vertical gap under the Japanese regulation. ADA requirements for US revenue service for both vehicles and facilities will be implemented in a US application of the CHSST.	Will Comply	
Design Life	-	-	-	-	
Vehicles	20 years	2	-	Yes	

System & Subsystem Characteristics	U.S. Standard / Code Requirement	U.S. Ref.	CHUBU HSST System Characteristics	CHUBU HSST Compliance	CHUBU HSST Compliance With FTA
Other System Elements	Transformers, rectifiers and all wiring and cables – 30 years	3	Some electrical systems/ subsystems / parts will be renewed at 15-year intervals due to technology innovations	Will comply	
Guideway	50 years	3	-	Yes	
Life, System (Vehicle and Electrical/Electronic Systems)	30 years	16	-		No
Life, System (Civil Works)	> 75 years	16	-		No
Running and Guidance Elements	20 years	3	-	Yes	
Stations	Not a Standard	-	-	N/A	
SUBSYSTEM CHARACTERISTICS	-	-	-	-	
Vehicles	-	-	-	-	
Design Parameters	-	-	-	-	
Weight	Not a Standard	-	-	N/A	
Dynamic Envelope	Not a Standard	-	-	N/A	
Vehicle Operating Loads	Lateral – reversing force =centrifugal force of AW1 Vehicle plus no less than 0.1 times AW1 Vertical – vertical load of AW1 load plus a reversing dynamic load of no less than 0.2 AW1 Longitudinal – that caused by normal acceleration and deceleration but no less than 0.1 AW1	2	Load/Definition: Limit load is the highest load expected in the life of the vehicle. Ultimate load is obtained by multiplying the limit load by a safety factor. Safety Factor: Safety factor of 1.5 is used for structural analysis.	Yes	
Vehicle Worst Case Load	Lateral – the greater of: max centrifugal force of AW2 vehicle under worst case over-speed conditions subject to ATP plus a	2	Safety factor of 1.5 is used for structural analysis. That is: Design ultimate Load = 1.5 x (Limit Load).	Yes	

System & Subsystem Characteristics	U.S. Standard / Code Requirement	U.S. Ref.	CHUBU HSST System Characteristics	CHUBU HSST Compliance	CHUBU HSST Compliance With FTA
	dynamic load of 0.1 times AW2 plus a lateral wind load normal to the side of the body per wind requirements or Survival wind load normal to the side of the stationary vehicle body plus the lateral load component from the worst combinations of guideway super elevation and vehicle load from AW0 to AW3 Vertical – the greater of: an AW3 loaded vehicle or an AW2 loaded vehicle plus or minus a dynamic load of 0.2 AW2 Longitudinal – largest longitudinal load resulting from dragging brakes due to single point failure on an AW2 loaded vehicle plus applicable wind loads Any other worst case loads		Additional safety factors (e.g. safety factor of 1.15) are applied to fittings, castings and welds. Strength: The structure is designed to support the limit load without permanent deformation and the ultimate load without destructive failure.		
Roof Loads	Any area to be traversed by personnel – point load of 1,110N (250 lbs) over a 15cmx10cm (6in x 4in) area without permanent deformation; and a uniform load of 1440 N/m^2 (30 lb/ft^2) without permanent deformation	2	TBD	TBD	
Floor Loads	Based upon AW3 loading – withstand a point load of 712 N	2	Floor Panel: Light-weight aluminum sandwich panel is	TBD	

System & Subsystem Characteristics	U.S. Standard / Code Requirement	U.S. Ref.	CHUBU HSST System Characteristics	CHUBU HSST Compliance	CHUBU HSST Compliance With FTA
	(160lbs) over a 13mm (0.5in) diameter circle		used for the floor material panel. The requirement is to withstand 550 kg-f per square meter (113 lbs/sq ft) load and a concentrated load of 135 kg-f applied with a 2-cm diameter steel ball at any point on the top surface without failure or permanent indentation greater than 1.3 mm (0.13 in.).		
Seat Loads	Seat pan, seat structure, and attachments to the structure shall support without permanent deformation a 2,160 N (485lbs) vertical load applied uniformly at each seating position	2	TBD	TBD	
Stanchions Loads	Horizontal load in any direction of 890 N (200lbs) at the midpoint	2	TBD	TBD	
Doors Supporting Tracks and Linkages	Withstand a force of 980 N (220lbs) applied at right angles to and approximately at the center of the panel, and be distributed over an area of 10cmx10cm (4inx4in) without permanent deformation or binding of the door mechanism	2	TBD	TBD	
Jacking and Lifting Loads	Use AW0 vehicle weight and shall not exceed material strength of any structural members including a load factor of 1.5	2	Safety factor of 1.5 is used for structural analysis. That is: Design ultimate Load = 1.5 x (Limit Load). Additional safety factors	Yes	

System & Subsystem Characteristics	U.S. Standard / Code Requirement	U.S. Ref.	CHUBU HSST System Characteristics	CHUBU HSST Compliance	CHUBU HSST Compliance With FTA
			(e.g. safety factor of 1.15) are applied to fittings, castings and welds. Strength: The structure is designed to support the limit load without permanent deformation and the ultimate load without destructive failure.		
Station Platform Edge- Vehicle Interface (Gap, Horizontal and vertical)	Refer to 1.6.3.1.	-	Refer to 1.6.3.1	-	
Structural – Crashworthiness	Vehicle to Vehicle – 5 km/hr (3 mph) any length train from AW0 to AW3 loading into another train w/ AW2 loading, on level guideway, brakes released, shall not cause any damage to the vehicles of either train. Vehicle to Over-travel protection device – under any loading condition, except pushing or pulling another train, at maximum impact speed allowed under automatic control and maximum deceleration rate of 1.2 g with only cosmetic damage, and shall not leave the guideway upon impact even if pushing or pulling another train at maximum speed	2	The car body is principally aluminum alloy with use of fiber reinforced plastic and thin aluminum plate and is of semi-monocoque construction, consisting of frames, stringers and skin panels. The principal load path of the vehicle is the floor base level frame. It resists the axial load transferred through couplers, and also transmits payload load to module by way of sliding tables and air suspensions. The floors consist of aluminum honeycomb panels.	TBD	

System & Subsystem Characteristics	U.S. Standard / Code Requirement	U.S. Ref.	CHUBU HSST System Characteristics	CHUBU HSST Compliance	CHUBU HSST Compliance With FTA
	allowed in manual control not subject to ATP				
Structural – Frame stresses	Not a Standard	-	-	N/A	
Resonance and Vibration	Not a Standard	-	-	N/A	
Design Life	20 years	2	-	Yes	
Propulsion	Shall be thermally rated at AW2 load for the highest operating temperature without degradation to equipment, and for intermittent operating conditions including towing, pushing, motor failures, and other specified conditions.	*2*	-	Yes	
Propulsion Motor	Not a Standard	-	-	N/A	
Propulsion Controls	Not a Standard	-	-	N/A	
Propulsion Braking Coordination	Refer to 2.4.1.13	-	-	-	
Brakes	Friction brakes shall incorporate a manual release mechanism.	*2*	-	Yes	
2.1.3.1 Dynamic/Regenerative (Rates and Type)	-	-	-	-	
Parking Brake	Shall be activated whenever the vehicle is parked and not in operation. Shall hold an AW3 loaded train on the maximum grade considering all environmental conditions, without the application of guideway or vehicle-borne power for the maximum period of time to	2	-	Yes	

System & Subsystem Characteristics	U.S. Standard / Code Requirement	U.S. Ref.	CHUBU HSST System Characteristics	CHUBU HSST Compliance	CHUBU HSST Compliance With FTA
	evacuate passengers during a total system power failure. It shall be capable of holding an AW0 loaded train on the maximum grade for at least 24 hours and for an indefinite period thereafter with manual intervention permitted.				
Service Braking	Performance and capacity shall be sufficient to accommodate specific loading conditions without overheating.	2	-	Yes	
Emergency Braking	It shall be possible to emergency brake, using friction braking only using stored energy. The emergency braking system shall be capable of decelerating and stopping a train under the worst case conditions of separation assurance, AW2 loading, environmental conditions for a minimum of three repeated stops at the minimum cycle time, while meeting all the train control requirements. The emergency braking system shall be irrevocable. The energy source for emergency braking shall be redundant, and	2	The brake system features two independent components: an electric brake (providing regenerative and reverse phase braking) for normal operation and a supplementary hydraulic brake used when the vehicle is traveling below 5 km/hr (3.1 mph). (The transition from electric brake to hydraulic brake occurs at approximately 5 km/h.) However, in case of an emergency, the hydraulic brake system can be used at any speed range. The hydraulic brake system is	Yes	

System & Subsystem Characteristics	U.S. Standard / Code Requirement	U.S. Ref.	CHUBU HSST System Characteristics	CHUBU HSST Compliance	CHUBU HSST Compliance With FTA
	the failure of any one shall be detected and annunciated. When emergency braking is applied, the propulsion power shall automatically be disconnected.		designed and sized to handle full emergency braking needs, and assumes no assistance will be available from the electric braking system during an emergency.		
Safe Braking Distance	Limits of stopping distance shall be met.	2	-	Yes	
Passenger Compartment Environment	-	-	-	-	
2.1.4.1	Method of measuring is defined Maximum sustained acceleration: Lateral Vertical Longitudinal Normal Longitudinal Emergency Maximum Jerk Rate: Lateral Vertical Longitudinal	2	Longitudinal: 0.128g acceleration 0.08 g/s jerk rate	Yes	
Ride Quality Standard	Ride comfort guidelines per Technical Assessment of Maglev System Concepts, Special Report 98-12	16	-		TBD
Acceleration, Max. Longitudinal	0.16g (1.6 m/s^2)	16	Longitudinal: 0.128g acceleration		Yes
Acceleration, Max. Lateral (Design)	0.10g (1.0 m/s^2)	16	Unbal. lateral acceleration: 0.075g		Yes
Acceleration, Max. Vertical	0.05g (0.5 m/s^2) Up	16			Yes

System & Subsystem Characteristics	U.S. Standard / Code Requirement	U.S. Ref.	CHUBU HSST System Characteristics	CHUBU HSST Compliance	CHUBU HSST Compliance With FTA
(Design)	0.20g (2.5 m/s^2) Down				
Jerk Rate, Longitudinal	0.10 g/s	16	Longitudinal: 0.08g/s jerk rate		Yes
Jerk Rate, Lateral	0.06 g/s	16			Yes
Jerk Rate, Vertical	0.04 g/s	16			Yes
2.1.4.2	Interior shall be designed to avoid resonance of panels and components. Equipment mounts shall be designed to minimize the transmission of vibration	2	-	Yes	
2.1.4.3	Method of Measuring is defined. Vehicle stationary, Doors Shut – 74 dBA, Vehicle Moving up to 48 km/h (30 mph) – 76 dBA, Vehicle Moving above 48 km/h (30 mph) – 79 dBA	2	-	Yes	
Noise Level	≤67 dBA (Goal), Inside passenger compartment	16			No
2.1.4.4	Ventilation – fresh filtered air at 15 M^3/hr (9 cfm) per passenger at design capacity, and shall continue to operate under emergency conditions including loss of guideway power for a time to be determined by Hazard Analysis HVAC – if provided, shall: maintain 60% humidity; be automatic, maintain prescribed temperature to +/- 2^0C (4^0F)	2	Conventional cooling system (2 sets per car mounted on roof) with 15,000 kcal/car (59,525 BTU/car). Heating system (electric heater type) for passenger seats (approx. 300 W/man) and operator. Ventilation system.	Will Comply	
Amenities-Heating, Ventilation, &	Heating: Corrected effective	16	-		TBD

System & Subsystem Characteristics	U.S. Standard / Code Requirement	U.S. Ref.	CHUBU HSST System Characteristics	CHUBU HSST Compliance	CHUBU HSST Compliance With FTA
Air Conditioning (HVAC) and Lighting	temp. (CET) ≥ 18° C (64° F) Air Conditioning: CET ≤ 23° C (73° F) Ventilation: ≥ 15m^2 of ventilation fresh air per hour per passenger Lighting: per ASCE 21-98, Para. 7.11				
2.1.4.5	Under non-emergency operating conditions – minimum of 54 lux (5 ft-candles) measured at the vehicle floor, including all doorways, and when the vehicle is stopped at the station, 215 lux (20 ft-candles) when measured 76 cm (30 in) above the vehicle floor. Lighting shall be of a consistent level. The emergency lighting system shall provide minimum lighting levels of 54 lux (5 ft-candles) measured in the immediate area of the doors. Emergency lighting power is to be provided by vehicle-borne batteries, capable of sustaining required levels of lighting for a time period as determined by the Hazard Analysis. See also NFPA 130 (5-5.3) and NFPA 101.	2,4	-	Will Comply	
2.1.5	-	-	-	-	

System & Subsystem Characteristics	U.S. Standard / Code Requirement	U.S. Ref.	CHUBU HSST System Characteristics	CHUBU HSST Compliance	CHUBU HSST Compliance With FTA
Elderly/Handicapped Accommodations	Refer to 1.6.1.		-	-	
Passenger Information Displays	Pre-recorded Announcements of approaching station	1	-	Will Comply	
Passenger Assistance Telephones	If operated by driver- NFPA 130 (5-6.2.1) If driverless- NFPA 130 (5-6.2.2)	4	The on-board public access (PA) system is provided to make live voice announcements and to give information/instructions to passengers under normal or emergency situations. During un-manned automatic operation, the Central Control Operator can give an announcement to the passengers via the radio subsystem.	Will Comply	
Public Address from Central Control	If operated by driver- NFPA 130 (5-6.2.1) If driverless- NFPA 130 (5-6.2.2)	4	During un-manned automatic operation, the Central Control Operator can give an announcement to the passengers via the radio subsystem.	Will Comply	
Stanchions and Handrails	Diameter or width of gripping surface shall be 32-38 mm (1.25-1.5 in) and provide a minimum of 76 mm (3 in) knuckle clearance from the nearest adjacent surface	2	-	Will Comply	
Fire Extinguisher	Each passenger compartment shall be fitted with at least one 5-lb, Class ABC, fire extinguisher	2,4	Fire extinguisher available. For US application, US	Will Comply.	

System & Subsystem Characteristics	U.S. Standard / Code Requirement	U.S. Ref.	CHUBU HSST System Characteristics	CHUBU HSST Compliance	CHUBU HSST Compliance With FTA
	per 75 AW1 passengers. Units shall be mounted in a visible and readily accessible location.		standards will be implemented.		
Fire Safety	Chapter 4 in "Fixed Guideway Transit Systems", NFPA 130, 1998; Also, Chapter 5 in " Standard for Fixed Guideway Transit and Rail Passenger Systems", NFPA 130, 2000.	2,4	Flammability requirements of present HSST-100L vehicle are based on the ministerial ordinance of flammability requirements, known as "A-A Standard", issued by Japanese Ministry of Transport. Entirely the same contents as A-A standard is already adopted in the Japanese regulations of railroad transportation. All materials used in HSST-100L are evaluated and certified by Classification & Test Method of A-A Standard. For US application of the CHSST, US standards will be implemented.	Will Comply	
Non-flammable Materials	NFPA 130 (5-2), Vehicle Construction requirements: testing; structural fire resistivity; component test criteria; Interior fire propagation resistance; Table 5-2.4 flammability and smoke emission characteristics of rail transit vehicle materials; electrical	2,4	For US application, US standards will be implemented.	Will Comply	

System & Subsystem Characteristics	U.S. Standard / Code Requirement	U.S. Ref.	CHUBU HSST System Characteristics	CHUBU HSST Compliance	CHUBU HSST Compliance With FTA
	insulation; equipment arrangement. Oils and hydraulic fluids shall be flame retardant except as required for normal lubrication. Up to 0.02% of the empty vehicle weight (AW0) shall be exempted from these requirements.				
Fire detectors and Alarms	Each passenger compartment shall have smoke detectors that, when activated, will annunciate an alarm in Central Control. There shall be means to test smoke detectors.	2	For US application, US standards will be implemented	Will Comply	
Fire Extinguisher	Required, per NFPA 130 (5-6.3). Each passenger compartment shall be fitted with at least one 5-lb, Class ABC, fire extinguisher per 75 AW1 passengers. Units shall be mounted in a visible and readily accessible location.	2,4	Fire extinguisher available. For US application, US standards will be implemented	Will Comply	
Floor Fire Resistivity	15 minutes penetration testing requirements per NFPA 130 (5-2.3.1.1).	4	-	Will Comply	
Provision for Emergencies	Per NFPA 130 (5-4), Ventilation: vehicles shall have provisions to deactivate all ventilation systems remotely or automatically. Per NFPA 130 (5-5), Emergency egress facilities through vehicle	4	-	Yes	

System & Subsystem Characteristics	U.S. Standard / Code Requirement	U.S. Ref.	CHUBU HSST System Characteristics	CHUBU HSST Compliance	CHUBU HSST Compliance With FTA
	side or end doors, to allow for supervised evacuation to a walking surface during an emergency, shall be provided. Per NFPA 130 (5-6) Communication				
Thermal Protection	All electric Motors shall have either thermal sensors or over-current sensors installed in the circuit.	2	-	Yes	
Heater Protection	All heater elements shall incorporate protective devices for the following failures: Ventilation airflow, if appropriate Temperature controls, if appropriate Short circuits and overloads in supply wiring.	4	-	Will Comply	
Subassemblies	-	-	-	-	
Guidance and Levitation	Loss of levitation shall not result in a condition that allows damage to the vehicles electrical system or guideway or presents a hazard to passengers. NFPA 130 (5-7): Under loss of guideway clearance, the system shall be capable of safe operation until such time that the failure is detected by operations or maintenance personnel and the	2 4	Loss of levitation results in the vehicle dropping on to the skids	Yes Will Comply	

System & Subsystem Characteristics	U.S. Standard / Code Requirement	U.S. Ref.	CHUBU HSST System Characteristics	CHUBU HSST Compliance	CHUBU HSST Compliance With FTA
	vehicle is taken out of service.				
Structure	NFPA 130 (5-2.3) Structural fire resistivity.	4	-	TBD	
Suspension	Not a Standard	-	Primary – Magnetic Levitation Secondary – air springs and mechanical linkages	N/A	
Body	Refer to 2.1.1.12	-	-	-	
Windows	Automotive Safety Glazing ANSI/SAE J673-APR93 (Edge Treatment) and Safety Glazing Materials for Glazing Motor Vehicles and Motor Equipment Operating on Land Highways – Safety Standard, ANSI/SAE Z26.1 – 1996. All Windows shall meet Item 3 tests for glass and glass laminates, or Item 4 tests for rigid plastics	2	The forward facing windows are made of a heat absorbing safety glass, and the crew and passenger compartment windows, including the windows in each passenger door, are tempered safety glass.	Will Comply	
Doors	-	-	-	-	
Type	Horizontally sliding, automatically controlled. Minimum height – 193 cm (76 in) Width to conform to programmed station stop requirement of opening of 82 cm (32.5 in). Inter-car doors when provided shall be minimum width of 76 cm (30in)	2	Bi-parting, horizontally sliding, outside hanging doors with sensitive edges are provided on both sides of the vehicle to facilitate loading and unloading.	Yes	
Control	Closed when opening is less than	2	The doors are pneumatically	Yes	

System & Subsystem Characteristics	U.S. Standard / Code Requirement	U.S. Ref.	CHUBU HSST System Characteristics	CHUBU HSST Compliance	CHUBU HSST Compliance With FTA
	9.5 cm (0.375 in). Locking mechanism to hold door in place. Detect an obstruction of 25mm (1 in) or greater at any point along the door edge. Closing force of less than 133N (30 lbs.) Audio and visual warning shall annunciate door closing. At least one door on each side (if doors on both sides) shall be manually operable with a force not to exceed 156 N (35 lbs.), and instructions for emergency operation posted.		operated and include pressure sensitive switches causing the door to reopen if any object greater than an inch in diameter obstructs the door.		
Inhibit When in Motion	Required.	1	Included as part of the door control and ATO systems	Yes	
Wrong Side Opening Prevention	Required	1	-	Will Comply	
Interior	Slip resistant floors. Vandal resistant fasteners on exposed equipment NFPA 130 (5-2.4) Interior Fire Propagation Resistance.	2 4	-	Will Comply	
Power Collector and Distribution	The power collectors shall function under all permissible dynamic/operating conditions and	2		Yes	

System & Subsystem Characteristics	U.S. Standard / Code Requirement	U.S. Ref.	CHUBU HSST System Characteristics	CHUBU HSST Compliance	CHUBU HSST Compliance With FTA
	in all vehicle operating environmental conditions. Fully redundant power collectors shall be provided to ensure continuous power collection. Each collector shall be sized to carry the entire vehicle RMS load for an indefinite period of time. It shall not be possible to provide shop power without electrically disconnecting the power collectors. The shop power connector shall be protected form the environment. NFPA 130 (5-2.5) Electrical Insulation NFPA 130 (5-3) Electrical Fire Safety Requirements. NFPA 130 (5-3.7) Electrical wiring requirements	4	Four pairs (8 units) per three car married pair train	Will Comply	
HVAC	Vehicles shall have provisions to deactivate all ventilation systems remotely or automatically.	4	In the event of main power loss, cooling and heating systems are automatically stopped, and the ventilation system is energized.	Yes	
Compressed Air	Not a Standard	-	-	N/A	
2.1.7.11	Manual or Automatic – if automatic then electrical, pneumatic and/or hydraulic	2	Fixed connection between cars. Tight-lock type automatic mechanical	Yes	

System & Subsystem Characteristics	U.S. Standard / Code Requirement	U.S. Ref.	CHUBU HSST System Characteristics	CHUBU HSST Compliance	CHUBU HSST Compliance With FTA
	coupling shall not require manual intervention.		coupler for train ends.		
Towing	Not a Standard	-	-	N/A	
Train Lining	Not a Standard	-	-	N/A	
Lights	The front and rear of the vehicle or train shall be readily identifiable as such and visible at all times. Vehicles that can be operated manually shall provide sufficient illumination for forward visibility of at least 5 lux at 10 m (0.5 ft-candles at 33 ft). NFPA 130 (5-5.3) Emergency lighting facility shall be provided. Level of illumination of means of egress and power sources shall conform to NFPA 101, Life Safety Code. Emergency lighting power automatically fed from batteries for at least 1 hour.	2 4	Headlights and tail lights are provided at each vehicle end. Two sets of headlights provide 100 watts for low and 200 watts for high beam positions Interior emergency lights in each passenger compartment connected to the on-board battery power	Will Comply	
Electrical	All on-board circuits and devices of the auxiliary subsystems shall be protected from overload by circuit breakers, fuses, or other interrupt devices. They shall be NEMA approved. The protection system shall be in accordance	2	-	Will Comply	

System & Subsystem Characteristics	U.S. Standard / Code Requirement	U.S. Ref.	CHUBU HSST System Characteristics	CHUBU HSST Compliance	CHUBU HSST Compliance With FTA
	with the National Electrical Code, NFPA 70, 1996. Wiring shall be unalloyed copper. Control wiring shall be physically isolated from power wiring to prevent conducted EMI from interfering with system performance.				
Emergency Power	Shall be maintained to critical subsystems when primary power is lost for a time period as determined by the Hazard Analysis. Critical subsystems shall include communications, fresh air ventilation, emergency lighting (interior and exterior), and automatic train protection.	2	On-board battery will provide levitation power for 30 seconds in addition to other critical loads	Yes	
Grounding	Where the maximum voltage on-board the vehicle exceeds 48 volts rms, the vehicle electrical system and body shall be positively grounded under all operating conditions. The car body shall not be used to carry the current for either negative return of primary power or low voltage power. Negative returns shall be segregated from other grounding	2		TBD	

System & Subsystem Characteristics	U.S. Standard / Code Requirement	U.S. Ref.	CHUBU HSST System Characteristics	CHUBU HSST Compliance	CHUBU HSST Compliance With FTA
	connections. Grounding plates shall be isolated from the car bodies and shall pass the Isolation Neutral Grounding Devices, Standards Requirements, Terminology and Test Procedures, IEEE 32 – 1972 (revised 1991). The low voltage dc negative return shall be grounded to the car body at the battery by means of a single removable ground strap through which no intentional current shall flow. This common ground when isolated from the car body shall pass IEEE 32 referenced above.				
Vehicle ATC (Manual Control) Operation, Fully Automatic	Not a Standard Automatic Train Control (ATC) per ASCE 21-96 for Driverless Operation	-	Fully operational from manual control console.	N/A	Yes
Radio Communication	Refer to 2.5.1	-	-	-	
Passenger Information Displays	Each Vehicle shall contain sign(s) that indicate that certain seats are priority seats for persons with disabilities. Required dimensions are cited.	2	-	Will comply	

System & Subsystem Characteristics	U.S. Standard / Code Requirement	U.S. Ref.	CHUBU HSST System Characteristics	CHUBU HSST Compliance	CHUBU HSST Compliance With FTA
Audio Announcements	Refer to 2.5.2 and 2.5.9.1	-	-	-	
Diagnostic & Condition Monitoring	Refer to 1.4.8	-	-	-	
Accessories	-	-	-	-	
Utility power outlets	Not a Standard	-	-	N/A	
Fixed Signs	Refer to 2.1.7.1.8	-	-	-	
2.2 Guideway Structure	-	-	-	-	
Guideway	Grade separated for exclusive use	16			System to run on exclusive R/W
Loads and Forces	-	-	-	-	
Dead Load	Shall consist of the maximum weight of all permanent structures including the weight of all permanently fastened material and equipment.	3	Main structural load and superimposed component loads. Superimposed loads are 550 kg-f/m (363 lbs/ft)	Will Comply	
Live Load	Shall consist of the weight of the applied load of one or more maximum length crush loaded trains under normal and failure conditions, including any specified push/pull retrieval capability, plus any additional service and emergency equipment which might be brought out onto the guideway during maintenance or failures. Crush load shall consider both static AW3 and a dynamic AW2 load. The weight of the applied load of passengers on the emergency walkway, if provided, shall be considered.	3	Based upon three-car train, with evenly distributed, fully loaded, vertical loading.	Will Comply	

System & Subsystem Characteristics	U.S. Standard / Code Requirement	U.S. Ref.	CHUBU HSST System Characteristics	CHUBU HSST Compliance	CHUBU HSST Compliance With FTA
Derailment Load	Not a Standard	-	Based upon load applied at the base of the rail in the vicinity of a coupler and a module pair on each side of the coupler. It is 0.15 times the module levitation load.	N/A	
Walkway Load	At least 4.0 kPa (85 lb/ft^2).	3	-	Will Comply	
Dynamic, Vibratory and Impact Forces	For VCF/SF less than 0.2, the minimum dynamic load allowance (I) applied to the vertical live load shall be 0.1. For VCF/SF greater than 0.2 but less than 0.3, I=VCF/SF-0.1. For VCF/SF greater than 0.3, a dynamic analysis shall be performed to determine the guideway deflections, dynamic load allowances and vehicle vertical accelerations. However, I shall not be less than 0.2	3	-	Will Comply	
Centrifugal Forces	$CF = V^2LL/R$ (SI units) or $CF = V^2LL/32.2R$ (English Units) Where V is the design speed for a particular curve in m/s (feet/sec), LL is the vehicle live load in Newtons (pounds-force) and R is the radius of the curve in meters (feet).	3	This equation is used	Yes	

System & Subsystem Characteristics	U.S. Standard / Code Requirement	U.S. Ref.	CHUBU HSST System Characteristics	CHUBU HSST Compliance	CHUBU HSST Compliance With FTA
	The effect of super elevation on vertical and lateral loads shall be taken into account.				
Longitudinal Forces	Guideway shall be designed for maximum longitudinal forces due to acceleration, and service and emergency deceleration, including grade effects, applied to live loads. Also for the severe loads due to suspension or propulsion failures as determined by the Hazard Analysis.	3	Use 10% of live load for acceleration forces and 15% of live load for braking loads	Will Comply	
Steering Forces	Forces from vehicle steering shall be applied to guidance and running surfaces. The magnitude shall be based upon a maximum size AW2 size train, with consideration for abnormal steering. Also consider forces due to steering misalignment, hunting, and the difference between the direction of motion and the steering angle.	3	Shall not be less than 20% of car weight. Equation for calculation of the guidance force from the magnetic levitation as a function of the levitation force.	Will Comply	
Rolling Force	Not A Standard	-	-	N/A	
Wind Load	Shall be applied in accordance with AASHTO LRFD Bridge Design Specifications, 2nd edition, 1999 Section 3.8. Wind loads on exposed vehicle areas in combination with the wind loads on the elevated	3	Max. wind velocity 25 m/sec (56 mph) Structure is designed for 50 m/sec (112 mph) wind Guideway without train – 300 kg-f/m^2 windward and 150 kg-f/m^2 leeward.	Will Comply	

System & Subsystem Characteristics	U.S. Standard / Code Requirement	U.S. Ref.	CHUBU HSST System Characteristics	CHUBU HSST Compliance	CHUBU HSST Compliance With FTA
	guideway shall be computed using the same method as for the wind on the structure. For systems where empty vehicles are stored on the elevated guideway maximum wind speed for survival shall be used to calculate the wind effects.		Guideway with train – 100 kg-f/m^2 windward train and guideway structure and 50 kg-f/m^2 leeward train and guideway structure.		
Buffeting Forces	The effects of buffeting forces when a maximum length train enters a narrow, closed passage shall be treated as a special condition of wind load.	3	-	Will Comply	
Thermal Force	Provision shall be made for the stresses and deformations occurring from ambient temperature changes, radiant solar heating and radiation cooling in accordance with AASHTO LRFD Bridge Design Specifications, 2nd Edition 1999, Section 3.12. Where applicable, stresses induced by heating provisions for ice and snow conditions and by differential movement of guideway elements shall be included.	3	-	Will Comply	
Snow and Ice Loads	Loads on the guideway resulting from freezing rain and from consolidation of snow on the guideway superstructure shall be	3	-	Will Comply	

System & Subsystem Characteristics	U.S. Standard / Code Requirement	U.S. Ref.	CHUBU HSST System Characteristics	CHUBU HSST Compliance	CHUBU HSST Compliance With FTA
	included as appropriate considering the environmental conditions. Loads on the guideway due to ice pressure or floating ice shall be computed and applied in accordance with Section 3.18 of AASHTO Standard Specifications for Highway Bridges, 16th edition, 1996 or Section 3.11 of AASHTO LRFD Bridge Design Specifications, 2nd edition, 1999.				
2.2.1.14 Earth Pressure	Shall be computed and applied in accordance with section 3.20 of AASHTO Standard Specifications for Highway Bridges, 16th edition, 1996, or section 3.7 of AASHTO LRFD Bridge Design Specifications, 2nd edition, 1999.	3	-	Will Comply	
2.2.1.15 Seismic Force	On elevated structures shall be computed and applied in accordance with section 3.10 of AASHTO LRFD Bridge Design Specifications, 2nd edition, 1999 or Division 1-A of AASHTO Standard Specifications for Highway Bridges, 16th edition, 1996.	3	Presently based upon Chapter 5 – Seismic design criteria in the "Road Bridge Design Criteria"	Will Comply	

System & Subsystem Characteristics	U.S. Standard / Code Requirement	U.S. Ref.	CHUBU HSST System Characteristics	CHUBU HSST Compliance	CHUBU HSST Compliance With FTA
	For underground structures, site specific analysis for ground shaking, fault rupture, regional tectonic movements, landslides, liquefaction, and differential consolidation of sediments must be considered.				
2.2.1.16 Stream Flow	Loads resulting from flowing water shall be computed and applied in accordance with section 3.18 of AASHTO Standard Specifications for Highway Bridges, 16th edition, 1996 or Section 3.7 of AASHTO LRFD Bridge Design Specifications, 2nd edition, 1999.	3	-	Will Comply	
2.2.1.17 Highway Vehicle Collision	Columns located within a distance of 10 m (30 feet) from the edge of a roadway shall be protected with a structural traffic barrier or designed in accordance with section 3.6.5 of AASHTO LRFD Bridge Design Specifications, 2nd edition, 1999. The possibility of over height vehicles colliding with a guideway beam shall be considered for guideways with less than 5 m (16.5 feet) clearance over existing roadways.	3	-	Will Comply	
2.2.1.18 Load Combinations	Loads and Forces shall be	3	-	Will Comply	

System & Subsystem Characteristics	U.S. Standard / Code Requirement	U.S. Ref.	CHUBU HSST System Characteristics	CHUBU HSST Compliance	CHUBU HSST Compliance With FTA
	investigated in combination as specified in Section 3.22 of AASHTO Standard Specifications for Highway Bridges, 16th edition, 1996 or in Section 3.4 of the AASHTO LRFD Bridge Design Specifications, 2nd edition, 1999, with the following exceptions. The Live load factor in load combination "Group I", AASHTO Standard Specifications for Highway Bridge Design shall be changed from 1.67 to 1.3; and live load factor in load combination "Strength I" AASHTO LRFD Bridge Design Specifications shall be changed from 1.75 to 1.35.				
2.2.2 Alignment	Horizontal and vertical alignments may each consist of a combination of straight (tangent) sections, spiral transitions and curved sections. When vehicle is stopped at a station, the vehicle floor shall be inclined no more than 1% in any direction from the horizontal plane	*3*	-	Will Comply	

System & Subsystem Characteristics	U.S. Standard / Code Requirement	U.S. Ref.	CHUBU HSST System Characteristics	CHUBU HSST Compliance	CHUBU HSST Compliance With FTA
	When a vehicle is stopped at any other location along the guideway, the angle at which the vehicle floor is inclined laterally shall not exceed 12% with respect to the horizontal plane, and the angle at which the vehicle floor is inclined longitudinally shall be limited by the normal longitudinal limits for maximum sustained acceleration including the effects of grade. When the vehicle is stopped at any other location on the guideway, the vehicle floor shall not be super-elevated more than 12%.				
2.2.2.1 Grade (Maximum and Nominal) Grade, Maximum Capability Grade, Operating Capability	Not a Standard 10% for a minimum of 460 m 7% at line speed w/ no degradation of performance	- 16 16	7%	N/A	 No TBD
2.2.2.2 Super Elevation (Actual and Unbalancing)	Not a Standard	-	8 degrees, --	N/A	
2.2.2.3 Curve Radius (Horizontal and Vertical)	Not a Standard 25 m (revised to 18.3 m)	- 16	Horizontal: side line track 50 m (164 ft); main line track 75 m (246 ft) Vertical: 1,500 m (4,291 ft)	N/A	 No

System & Subsystem Characteristics	U.S. Standard / Code Requirement	U.S. Ref.	CHUBU HSST System Characteristics	CHUBU HSST Compliance	CHUBU HSST Compliance With FTA
Turn Radius, Minimum Crest Curvature, Minimum Sag Curvature, Minimum	1000 m 1000 m	16 16			No No
2.2.2.4 Switch Radius	Not a Standard	-	6.9 degrees	N/A	
2.2.2.5 Minimum Spiral Length	Not a Standard	-	Speed and super-elevation dependant – formula is given for calculation	N/A	
2.2.2.6 Minimum Tangent Length	Not a Standard	-	Speed dependant – formula is given for calculation	N/A	
2.2.3 Environmental	-	-	-	-	
2.2.3.1 Seismic Seismic	Refer to 2.2.1.15 System shall be designed to operate safely and meet the standards of the selected site.	- 16	-	-	 Will Comply
2.2.3.2 Drainage	If the guideway is designed such that water may accumulate on the surfaces, a drainage system shall be provided. Surfaces shall be sloped with a minimum 1% slope towards the drains.	3	-	Will Comply	
2.2.3.3 Tolerances	Design and Construction tolerances shall be coordinated with the system designer to achieve the ride quality requirements.	3	-	Will Comply	
2.2.3.4 Fatigue	Shall be in accordance with AASHTO Standard Specification for Highway Bridges, 16th edition or AASHTO LRFD Bridge Design Specification, 2nd edition, 1999.	3		Will Comply	

System & Subsystem Characteristics	U.S. Standard / Code Requirement	U.S. Ref.	CHUBU HSST System Characteristics	CHUBU HSST Compliance	CHUBU HSST Compliance With FTA
	The number of cycles of maximum stress range due to AW1 operating loads to be considered in the design of the guideway (except for running and guidance elements) shall correspond to an infinite fatigue life.				
2.2.3.5 Structural Deformation and Settlement	All structural deformations, including differential foundation settlement, shall be considered in the structural behavior of the guideway and vehicle guidance provisions. The control of deformation to maintain acceptable ride comfort shall be considered in the guideway design.	3	-	Will Comply	
2.3 Trackwork	-	-	-	-	
2.3.1 Running, Guiding, and Propulsion Elements	-	-	-	-	
2.3.1.1 Tolerances	Not a Standard	-	Tolerances given "at construction" and "during operation." Lateral and Vertical deviation per every 10 m chord: 3 mm & 5 mm. Track Gauge: 3 mm & 5	N/A	

System & Subsystem Characteristics	U.S. Standard / Code Requirement	U.S. Ref.	CHUBU HSST System Characteristics	CHUBU HSST Compliance	CHUBU HSST Compliance With FTA
			mm. Rail Joint Alignment: 1 mm/1 mm & 1mm/1.5 mm. Difference between right and left rails: 3 mm & 5 mm.		
2.3.1.2 Clearances	Vehicle dynamic envelope shall be separated from any other vehicle dynamic envelope by at least 100 mm (4 inches). The vehicle dynamic envelope shall be separated from any fixed guideway structures by at least 100mm (4 inches). Station platform edges are excluded from this requirement.	3	-	Will Comply	
2.3.2 End of Guideway Buffers and Trip Stops	Not a Standard	-	-	N/A	
2.3.2.1 Buffer Tolerances	Not a Standard	-	-	N/A	
2.3.3 Guideway Switches Switch	Not a Standard Minimum of 2 switch systems at either end of alignment	- 16	2-way, 3-way and scissors type. 15 seconds switching time.	N/A	 Will Comply
2.3.4 Traffic Signals	Not a Standard	-	-	N/A	
2.3.5 Signage	Shall be provided to inform passengers, operating personnel, and emergency services of features that may be critical to a safe evacuation or to minimize the severity of a life threatening incident, and to enhance system operation.	*3*	-	Will Comply	

System & Subsystem Characteristics	U.S. Standard / Code Requirement	U.S. Ref.	CHUBU HSST System Characteristics	CHUBU HSST Compliance	CHUBU HSST Compliance With FTA
	Types and locations shall comply with NFPA 130, 2000 edition. The emergency evacuation route shall be provided with: direction to nearest exit (spaced no more than 100 m (325 feet) apart; designation of exit; instructions for utilizing the exit; warning sign of potential hazards in the exit area. Boundaries of each power section shall be clearly marked. Location information shall be clearly marked at intervals of no more than 100 m (325 feet). Warning of electrical hazards greater than 50 volts presented by exposed power rails in accordance with NFPA 130, 2000 edition, section 3-1.3. Signs shall be provided on the guideway at stations and along the guideway at intervals of no more than 30 meters (100 feet).				
2.3.6 Wire and Cable Raceways	Not a Standard	-	-	N/A	
2.3.7 Emergency Evacuation and Access	NFPA 130, 2000 edition.	*3*	-	Will Comply	

System & Subsystem Characteristics	U.S. Standard / Code Requirement	U.S. Ref.	CHUBU HSST System Characteristics	CHUBU HSST Compliance	CHUBU HSST Compliance With FTA
	For tunnels, "Point of Safety" shall be defined as an enclosed fire exit that leads to a public way or safe location outside the structure, or an at grade point beyond any enclosing structure, or another area that affords adequate protection for passengers. For Elevated Guideways, an acceptable "other suitable means" to using an emergency walkway shall be a means which evacuates the maximum number of passengers which can be in a maximum length train to a point of safety within no more that 15 minutes from the time the evacuation is initiated.				
2.3.8 *Emergency Lighting and Ventilation*	Underground systems shall comply with NFPA 130, 2000 edition, Sections 3-2.4.7 and 3-2.2, Elevated and at grade systems shall have the egress route illuminated to not less than 2.7 lux (0.25 foot-candles)	3	-	Will Comply	
2.3.9 Intrusion Protection and Detection	The system shall protect against unauthorized persons or foreign objects entering the vehicle	3	-	Will Comply	

System & Subsystem Characteristics	U.S. Standard / Code Requirement	U.S. Ref.	CHUBU HSST System Characteristics	CHUBU HSST Compliance	CHUBU HSST Compliance With FTA
	dynamic envelope.				
2.4 Automatic Train Control	-	-	-	-	
2.4.1 ATP	-	-	-	-	
2.4.1.1 Presence Detection	If required	1	Train Detection check-in check-out method	Yes	
2.4.1.2 Separation Assurance	Required	1	Automatic train protection with cab-signal.	Yes	
2.4.1.3 Unintentional-motion Detection	Required	1	Included as part of the Velocity Detection System	Yes	
2.4.1.4 Over-speed Protection	Required	1	Included as part of the ATP system	Yes	
2.4.1.5 Over-travel Protection	Required	1	Included as part of the ATP System	Yes	
2.4.1.6 Parted Consist Protection	Required if separate vehicles operate coupled together	1	-	Will Comply	
2.4.1.7 Lost Signal Protection	Required for all critical ATP signals	1	-	Will Comply	
2.4.1.8 Zero Speed Detection	Required for all systems where vehicles stop	1	Included as part of the Velocity Detection System	Yes	
2.4.1.9 Unscheduled Door Opening Protection	Required	1	Included as part of the door control system – emergency brake is applied and propulsion power is removed.	Yes	
2.4.1.10 Door Control Protection Interlocks	Required	1	Vehicle motion is inhibited when door is opened	Yes	
2.4.1.11 Departure Interlocks	Required	1	-	Will Comply	
2.4.1.12 Direction Reversal Interlocks	Required if vehicles are bi-directional	1	Included as part of the ATP and Velocity Detection	Yes	

System & Subsystem Characteristics	U.S. Standard / Code Requirement	U.S. Ref.	CHUBU HSST System Characteristics	CHUBU HSST Compliance	CHUBU HSST Compliance With FTA
			systems		
2.4.1.13 Propulsion and Braking Interlocks	Required	1	Included as part of the propulsion control system	Yes	
2.4.1.14 Guideway Switch Interlocks	Required if vehicles operate automatically over switches	1	-	Will Comply	
2.4.2 ATO	-	-	-	-	
2.4.2.1 Motion Control	Acceleration, deceleration, jerk rates control are required	1	Included as part of the ATO and Velocity Detection systems	Yes	
2.4.2.2 Programmed Station Stop	At least 82 cm (32.5 inches) clear opening	1	Included as part of the ATO and Velocity Detection systems	Yes	
2.4.2.3 Door and Dwell Control	Required – shall coordinate w/ station doors if supplied	1	Included as part of the door control and ATO systems	Yes	
2.4.3 ATS	-	-	-	-	
2.4.3.1 Status and Performance Monitoring	-	-	-	-	
2.4.3.1.1 Systems Operations Displays	Provide a visual representation of real-time operating conditions. Shall show location and identification of all trains; direction of travel; number of cars comprising each train; status of switches; operating mode and status of selected equipment; status of each station including dwell times	1	-	Will Comply	
2.4.3.1.2 Power Schematic Display	Shall show the presence or absence of electrical power in each propulsion power circuit; and/or guideway segment; and	1	-	Yes	

System & Subsystem Characteristics	U.S. Standard / Code Requirement	U.S. Ref.	CHUBU HSST System Characteristics	CHUBU HSST Compliance	CHUBU HSST Compliance With FTA
	status of all circuit breakers; backup power; any alarm conditions				
2.4.3.2 Performance Control and Override	-	-	-	-	
2.4.3.2.1 Automatic Control Functions	-	-	-	-	
2.4.3.2.1.1 Mode Management	Required	1	-	Will Comply	
2.4.3.2.1.2 Train Tracking	Required - consistent w/ system configuration and operating modes	1	-	Will Comply	
2.4.3.2.1.3 Headway Management	Required – consistent w/ modes of operation	1	-	Will Comply	
2.4.3.2.1.4 Train Routing	Required - consistent w/ modes of operation	1	-	Will Comply	
2.4.3.2.2 Manual Control and Override Functions	-	-	-	-	
2.4.3.2.2.1 Train Dispatching	Required	1	-	Will Comply	
2.4.3.2.2.2 Train Routing	Required – consistent w/ modes of operation	1	-	Will Comply	
2.4.3.2.2.3 Initiation of Service	Required	1	-	Will Comply	
2.4.3.2.2.4 Termination of Service	Required	1	-	Will Comply	
2.4.3.2.2.5 Modify Train Operations	Required	1	-	Will Comply	
2.4.3.2.2.6 Remove Trains	Required - if off-line storage is	1	-	Will Comply	

System & Subsystem Characteristics	U.S. Standard / Code Requirement	U.S. Ref.	CHUBU HSST System Characteristics	CHUBU HSST Compliance	CHUBU HSST Compliance With FTA
	provided				
2.4.3.2.2.7 Initiate Failure Mode Operations	Required	1	-	Will Comply	
2.4.3.2.2.8 Hold Trains	Required	1	-	Will Comply	
2.4.3.2.2.9 Command Switches	Required - if switches are provided	1	-	Will Comply	
2.4.3.2.2.10 Stop All Trains	Required - to be accomplished with one command	1	Emergency Pushbutton on Central Control Console	Yes	
2.4.3.2.2.11 Command Power On/Off	Required - to be accomplished for entire system or individual circuits	1	Performed at Central Control Console	Yes	
2.4.3.2.2.12 Acknowledge and Process Alarms	Required	1	Performed at Central Control Console	Yes	
2.4.3.2.3 Alarms and Malfunction Reporting	-	-	-	-	
2.4.3.2.3.1 System Alarms	Prioritization of those that pose an immediate threat to safety and those that could cause a potential threat to safety as a minimum	1	-	Will Comply	
2.4.3.2.3.2 Facility Fire and Intrusion Alarms	If provided shall annunciate separately at Central Control	1	-	Will Comply	
2.4.3.2.3.3 Data Recording and Reporting	Required	1	-	Will Comply	
2.5 Communications	-	-	-	-	
2.5.1 Operations & Maintenance Radios	Required	1	-	Will Comply	
2.5.2 Vehicle Public Address	Shall be capable of making announcements to all trains in system and to individually	1	Central Control Operator can communicate with the passengers in the cabin via	Yes	

System & Subsystem Characteristics	U.S. Standard / Code Requirement	U.S. Ref.	CHUBU HSST System Characteristics	CHUBU HSST Compliance	CHUBU HSST Compliance With FTA
	selected trains		the On-Board PA system during normal and emergency situations		
2.5.3 Facilities Public Address	Shall meet intelligibility requirements of ANSI S3.2-1989 – measured at maximum distance from speakers and 1.5 m above floor surface	1	-	Will Comply	
2.5.4 Operations & Maintenance Telephones	Required	1	Operations and Maintenance Radio subsystem provides the means for Central Control Operator to communicate with operations and maintenance personnel throughout the system.	*Yes*	
2.5.5 CCTV Monitoring and Recording	Required – particularly shall monitor the platform edge and boarding areas	1	-	Will Comply	
2.5.6 Station/Wayside Two way Communications	At all stations and blue light locations along guideway per NFPA 130. Automatically call central control. Shall meet intelligibility requirements of ANSI S3.2-1989	1	-	Will Comply	
2.5.7 Vehicle Two-way Communications	Required for all trains in system – shall provide vehicle ID to central control	1	-	Will Comply	
2.5.8 Recording Audio Communications	Required	1	-	Will Comply	
2.5.9 Station Warning of Train Arrival/ Departure	-	-	-	Will Comply	

System & Subsystem Characteristics	U.S. Standard / Code Requirement	U.S. Ref.	CHUBU HSST System Characteristics	CHUBU HSST Compliance	CHUBU HSST Compliance With FTA
2.5.9.1 Audio	Required	1	-	Will Comply	
2.5.9.2 Video	Required	1	-	Will Comply	
2.6 Supervisory Control Center and SCADA	Not a Standard	-	-	N/A	
2.7 Traction and Low Voltage Power Distribution Systems (Codes)	-	-	-	-	
2.7.1 Traction Power Substations	-	-	-	-	
2.7.1.1 Capacity vs. Anticipated Loads	All equipment including substation equipment, feeder cables and power rails shall be sized to withstand peak loads encountered during start-up, normal, degraded modes of operation of the ultimate fleet of vehicles planned for the system. Also all equipment shall have a duty cycle rating based upon these operating conditions for vehicles loaded to an AW2 capacity.	3	-	Will Comply	
2.7.1.2 Power Factor	At least 0.8 lagging averaged over a two hour period, and shall not permit leading power factor conditions	3	-	Will Comply	
2.7.1.3 Harmonics	Voltage distortion limits at the point of common coupling between the electric utility and the APM System shall conform to guidelines set forth in Table 11.1	3	-	Will Comply	

System & Subsystem Characteristics	U.S. Standard / Code Requirement	U.S. Ref.	CHUBU HSST System Characteristics	CHUBU HSST Compliance	CHUBU HSST Compliance With FTA
	of IEEE Recommended Practices and Requirements for Harmonic Control in Electric Power Systems				
2.7.1.4 Power Regeneration Equipment	Where required – shall accommodate worst case over-voltage conditions associated with power regeneration at maximum vehicle speeds, loading, and train length. Provisions shall prevent excessive voltage from being returned to the utility power source.	3	-	Yes	
2.7.1.5 Remote/Local Control	Switchgear shall be capable of being operated both remotely at Central Control and locally. Each separate switchgear element shall have a lockout switch allowing local control of the switchgear, locking out remote control when in the local mode.	3	-	Yes	
2.7.1.6 Restoring Power	Automatic reclosing of power distribution equipment shall be permitted only after thorough hazard analysis and only when line testing verifies that the short circuit condition does not exist.	3	-	Will Comply	
2.7.1.7 Energy Consumption (per seat-mile and per train-mile)	Not a Standard	-	-	N/A	
2.7.1.8 Redundancy	No single point failure will preclude operations of the APM system. Degraded modes of	3	-	Will Comply	

System & Subsystem Characteristics	U.S. Standard / Code Requirement	U.S. Ref.	CHUBU HSST System Characteristics	CHUBU HSST Compliance	CHUBU HSST Compliance With FTA
	operation are permitted				
2.7.1.9 System Protection	Automatic protection of fault, overload, over-voltage, under-voltage, ground fault, phase imbalance as applicable to AC or DC systems shall be provided. The protection system shall be selective – all protective devices shall be coordinated so that any fault or overload condition results in tripping of the smallest isolatable portion of the system. Automatic tripping of any circuit breaker shall have an indication and trigger an alarm at Central Control	3	-	Will Comply	
2.7.1.10System Monitoring and Alarms	As a minimum the following conditions shall be annunciated: Over-voltage, Under-voltage, Over-current, Ground Fault, Switchgear Local Mode, Over-temperature, Loss of Phase, Fire or Smoke. Transformers and Rectifiers shall have over-temperature sensors that activate alarms and cause automatic shutdown of the affected equipment at the preset temperature.	3	-	Will Comply	

System & Subsystem Characteristics	U.S. Standard / Code Requirement	U.S. Ref.	CHUBU HSST System Characteristics	CHUBU HSST Compliance	CHUBU HSST Compliance With FTA
2.7.2 Guideway Power Rail	The power rail system shall include power rails, fastening means, expansion joints, protective covers, and other hardware. It shall be sized for the current/voltage drop requirements and to provide structural strength for appropriate spacing. The electromagnetic forces developed during short circuit conditions shall not damage it.	3	-	Yes	
2.7.2.1 Conductor	Power rails shall be electrically insulated from each other and from adjacent structures. Power rails shall be protected from inadvertent contact. Power Rails shall be solidly supported to prevent lateral or vertical motion, while allowing longitudinal movement necessary for thermal expansion.	3,4	-	Yes	
2.7.2.2 Power Zones	Power zones shall be coordinated with blue light stations. A single vehicle shall be able to bridge power gaps between power zones to provide a continuous power supply at all times. An	3	-	Will Comply	

System & Subsystem Characteristics	U.S. Standard / Code Requirement	U.S. Ref.	CHUBU HSST System Characteristics	CHUBU HSST Compliance	CHUBU HSST Compliance With FTA
	exception shall be made when two adjacent power zones are electrically incompatible, in which case a non-bridgeable gap shall be provided. A means shall be provided to prevent energizing an unpowered zone by bridging a power gap with a vehicle.				
2.7.2.3 Insulators	The surface of the insulator shall be smooth, hard, UV resistant, and rated either self extinguishing or non-burning per Standard Test Method for Rate of Burning and/or Extent of Time of Self Supporting Plastics in a Horizontal Position, ASTM Standard D635-98. Power rails shall have a minimum in-service resistance to earth of 1 meg Ohm per 300 m (1meg Ohm per 1000 feet). For DC Systems negative return elements shall have a minimum in-service effective rail resistance to earth of 500 Ohms per 300 m (1000 feet) for a single track	3	-	Will Comply	
2.7.3 Low Voltage Power Substations	Station electrical equipment shall provide housekeeping power and	3	-	Will Comply	

System & Subsystem Characteristics	U.S. Standard / Code Requirement	U.S. Ref.	CHUBU HSST System Characteristics	CHUBU HSST Compliance	CHUBU HSST Compliance With FTA
	lighting distribution from the same location. Typical loads are ATC, UPS, Communications, and other station equipment.				
2.7.4 UPS	UPS power shall be provided for at least the following functions: ATC, Communications, Fire and other appropriate safety and security equipment, power distribution system control power at the substation.	3	-	Will Comply	
2.7.5 Guideway Equipment Power Requirements	Not a Standard	-	-	N/A	
2.7.6 Grounding & Stray Current Control	-	-	-	-	
2.7.6.1 Corrosion Control	For DC traction systems a means of testing shall be provided on all electrically bonded structures to measure and monitor stray currents. Stray current protective measures shall comply with Control of External Corrosion on Underground or Submerged Metallic Piping, NECA Standard RP0169-96	3	Corrosion protection is provided for all primary and secondary structures either by use of corrosion resistant materials or by use of protective finishes.	Yes	
Salt Atmosphere	System components and finishes to withstand salt fog atmosphere (5% NaCl by weight) up to 48	16	-		TBD

System & Subsystem Characteristics	U.S. Standard / Code Requirement	U.S. Ref.	CHUBU HSST System Characteristics	CHUBU HSST Compliance	CHUBU HSST Compliance With FTA
	hours without signs of corrosion.				
2.7.6.2 Grounding	A non-current carrying ground rail shall be provided to provide proper and continuous grounding of the vehicle. The ground resistance shall not exceed 5 ohms when measured in accordance with IEEE Recommended Practice for Grounding of Industrial and Commercial Power Systems, IEEE Std 142-1991, Section 4.4. This may be deleted for DC Systems providing that an alternative approach provides equivalent protection from leakage currents and electrical system faults. For DC Systems the Current Carrying negative return shall have no more than one single point ground on the APM system. Under worst case fault conditions the system shall not permit a voltage (touch potential) greater than 60 volts to appear anywhere on the vehicle or any enclosure when measured to earth ground	3	-	Will Comply Yes Will Comply	
2.7.6.3 Mainline	-	-	-	-	

System & Subsystem Characteristics	U.S. Standard / Code Requirement	U.S. Ref.	CHUBU HSST System Characteristics	CHUBU HSST Compliance	CHUBU HSST Compliance With FTA
2.7.6.4 Yard	-	-	-	-	
2.7.6.5 Maintenance Facility	Shop tracks shall be electrically grounded to the shop building and shop building grounding system. For DC systems this ground shall be separated from the yard and mainline ground systems.	3	-	Yes Will Comply	
2.7.7 Standby Power Generators	Not a Standard	-	-	N/A	
Stations	-	-	-	-	
Stations	Will meet the system operational requirements.	16	-		Will Comply
2.7.8 Platform Height	Not a Standard	-	29.9 in. (760 mm) above the guideway rail.	N/A	
2.7.9 Automatic Station Doors	Refer to 2.4.1.9, 2.4.1.10, and 2.4.2.11	-	-	-	
2.7.10 Door Recycling Sequence	Refer to 2.1.7.6.2	-	-	-	
2.7.11 Evacuation of Misaligned Trains	Means shall be provided to allow egress from a misaligned train onto the station platform. Where auxiliary doors or gates are used, a latching mechanism shall be provided on the guideway side to allow passengers to exit onto the platform.	*3*	-	Will Comply	
2.7.12 Demand Pushbuttons	Not a Standard	-	-	N/A	
2.7.13 Information Displays	Refer to 1.4.9	-	-	-	
2.7.14 *Platform Edge Finish*	If not protected by platform screens or guardrails, shall have a detectable warning 0.6 m (2 feet)	3	-	Will Comply	

System & Subsystem Characteristics	U.S. Standard / Code Requirement	U.S. Ref.	CHUBU HSST System Characteristics	CHUBU HSST Compliance	CHUBU HSST Compliance With FTA
	wide running the full length of the unprotected platform. Detectable warning strips shall consist of raised truncated domes with a nominal diameter of 23 mm (2.35 inches) and shall contrast visually with the adjoining surfaces, either light on dark, or dark on light. When used on interior surfaces, they shall differ from adjoining surfaces in resiliency and sound-on-cane contact.				
2.7.15 Platform Edge Protection	A means shall be provided to protect people from the potential hazard of being struck by a moving train or moving elements within the guideway, falling from the platform, shock or electrocution. Acceptable means are: Intrusion Prevention, Intrusion Control, Intrusion Detection, etc	3	-	Will Comply	
2.7.16 *Elderly/Handicapped Access*	In accordance with Americans with Disabilities Act of 1990.	3	-	Will Comply	
2.7.17 Emergency Lighting and Ventilation	For free standing stations dedicated to the APM system, NFPA 130, 2000 edition, Sections 2-3, and 2-6 respectively applies.	3	-	Will Comply	
2.7.18 Fire Protection	Detection – Smoke and/or heat detection and alarm devices shall	3	-	Will Comply	

System & Subsystem Characteristics	U.S. Standard / Code Requirement	U.S. Ref.	CHUBU HSST System Characteristics	CHUBU HSST Compliance	CHUBU HSST Compliance With FTA
	be installed and annunciated in Central Control. Containment – platform doors and barriers if intended to serve as a fire barrier shall conform to NFPA 130, 2000 section 2-2.3.2 and 2-2.2.2. Suppression – if required shall comply with local building codes and NFPA 130, 2000 edition.				
2.9 Maintenance and Storage Facility	-	-	-	-	
2.9.1 Facility Layout	NFPA 130, Open Areas (6-2, water supply, emergency access, fire extinguishers, communications); Structures (6-3): 6-3.1 structural requirements; 6-3.2 drainage systems; 6-3.3 floors (noncombustible materials); 6-3.4 roofs; 6-3.5 electrical requirements; 6-3.7 overhead cranes; 6-3.8 ventilation.	*4*	-	Will Comply	
2.9.1.1 Geometric Criteria	NFPA 130 6-5.1 vehicle placement on yard tracks shall allow minimum clearance of 36 in. (91.4 cm) between the sides of adjacent vehicles.	4	-	Will Comply	
2.9.2 *Facility Features*	NFPA 130 6-5.1 emergency evacuation from the structure per	4	-	Will Comply	

System & Subsystem Characteristics	U.S. Standard / Code Requirement	U.S. Ref.	CHUBU HSST System Characteristics	CHUBU HSST Compliance	CHUBU HSST Compliance With FTA
	NFPA 101, Life Safety Code. NFPA 130, Fire protection suppression systems (6-4); operations and maintenance (6-5).				
2.9.2.1 Automatic Dispatching of Trains	Not a Standard	-	-	N/A	
2.9.2.2 Automatic removal of Trains	Not a Standard	-	-	N/A	
2.9.2.3 Test Track	Not a Standard	-	-	N/A	
2.9.2.4 Vehicle Wash	Not a Standard	-	-	N/A	
2.9.2.5 Under-car Blowdown Facility	NFPA 130 (6-3.6) Maintenance Pit Area.	4	-	Will Comply	
2.9.2.6 Maintenance of Way Vehicle	Not a Standard	-	-	N/A	
3. SYSTEM COSTS					
Cost, Capital Goal of Guideway	TBD $/km ($/mile)	16			
Cost, Capital Goal of Stations	TBD $ /station	16			
Cost, Capital Goal of Vehicles	TBD $ /vehicle	16			
Cost, Operation Goal	TDB $ /vehicle-km ($ / vehicle-mile)	16			
4. OVERALL SYSTEM REQ.					
Technology	Use of magnetic fields for suspension, propulsion, guidance, and braking	16			-
Throughput	TBD # passengers/hour/direction	16			-
Extendible and Flexible System	Modular design	16			-
Usage (Hours of Operation)	20 hours/day, 365 days per year	16			Will Comply
Aesthetic Philosophy	Non-intrusive construction	16			Will Comply

REFERENCES:

1. ASCE APM STANDARD PART 1 – ASCE 21-96
2. ASCE APM ATANDARD PART 2 – ASCE 21-98
3. ASCE APM STANDARD PART 3 – ASCE 21-00
4. NFPA 130: National Fire Protection Association, INC., Standard for Fixed Guideway Transit and Passenger Rail Systems, 2000 Edition
5. IEEE 1474.1 - 1999: Institute of Electrical and Electronics Engineers, Standard for Communications – Based Train Control (CBTC) Performance and Functional Requirements.
6. 49 CFR Part 38 ADA Accessibility Specifications for Transportation Vehicles, Rev. Oct. 1, 1997
7. 28 CFR Part 36 ADA Standards for Accessible Design, ADA Accessibility Guidelines for Buildings and Facilities, Rev. July 1, 1994
8. 49 CFR Part 659: Rail Fixed Guideway Systems: State Safety Oversight
9. DOT-FTA-MA-90-5006-00-1/ DOT-VNTSC-FTA-00-03 Compliance Guidelines for States with New Starts Projects, June 2000.
10. FTA VNTSC Transit Security Handbook, March 2, 1998.
11. DOT-FTA-MA-26-5005-00-01/DOT-VNTSC-FTA-00-01 Hazard Analysis Guidelines for Transit Projects.
12. 2001 Threshold Limit Values (TLVs) for Chemical Substances and Physical Agents, Biological Exposure Indices (BEIs), by the American Conference of Governmental Industrial Hygienists.
13. APTA SS-E-010-98, Standard for the Development of an Electromagnetic Compatibility Plan.
14. CENELEC PrEN 50121-4 specification: Railway applications - Electromagnetic compatibility -- Part 4: Emission and immunity of the signaling and telecommunications apparatus.
15. National Electrical Code, National Fire Protection Association.
16. General Requirements Document, Low Speed Maglev Technology Program, Federal Transit Administration, August 2001.

3 TECHNOLOGY REVIEW and DEMONSTRATION TRIPS to NAGOYA, JAPAN, MARCH 9 –15, 2002 and FEBRUARY 1-7, 2003

This chapter documents the various technical evaluations, discussions and meetings that the Federal Transit Administration (FTA) consultants and the Maglev Urban Systems Associates (MUSA) team participated in during their trip to Japan from March 9 to March 15, 2002. A second trip was taken by FTA consultants, representatives from several transit agencies and a MUSA representative from February 1 to February 7, 2003.

The majority of the time was spent in the City of Nagoya where the FTA, the transit authority representatives and the MUSA team had a series of technical discussions with key members of Chubu HSST, and also took the opportunity to ride the 100-L prototype vehicle at the Chubu HSST test track facility. In addition, meetings were held with representatives of Nippon Sharyo, the Aichi Prefecture, Yahagi Construction Company and the Japanese Ministry of Land, Infrastructure and Transport (MLIT) in Tokyo, where construction procedures, safety standards and methods of certification of the HSST system in Japan were discussed.

3.1 TRIP PARTICIPANTS

The FTA, transit agency and MUSA delegation from the United States on these trips were comprised of the following individuals:

Federal Transit Administration (FTA) Team Members

Gopal Samavedam, Ph.D., Foster-Miller (Team leader)
George Anagnostopoulos, USDOT Volpe National Transportation Systems Center
Stephen Kokkins, PE, Foster-Miller
Frank Raposa, PE, Raposa Services
Marc Thompson, Ph.D., Thompson Consulting

Federal Railroad Administration (FRA) Representative

John Harding, Ph.D

Maglev Urban System Associates (MUSA) Team Members (Based in United States)

Robert Evans, PE, Earth Tech, Inc. (MUSA team leader)
Yoav Arkin, Earth Tech, Inc.
Pierre Brunet, Earth Tech, Inc.
Joseph Abbas, Kimley-Horn & Associates
Robert Chamberlain, PE, Chamberlain Engineering
Michio Takahashi, Director of Chubu HSST, and key members of his staff, hosted the delegation throughout the visit in Japan.

Selected U.S. Transit Agency Representative

David Keever, Science Applications International Corporation
Suhair Alkhatib, Maryland Transit Administration, MD
Gary Erenrich, Montgomery County, MD

Denis Cournoyer, Hampton Roads Transit, VA
Richard Feder, Port Authority of Allegheny County, PA
David Munoz, CDOT project team, CO
Clark Roberts, CDOT project team, CO

Key Chubu HSST Management and Engineering Personnel

CHUBU-HSST MANAGEMENT

Takao Sekiya	President
Masaaki Fujino	Executive Vice President
Michio Takahashi	Director
Junro Kato	Deputy Director – Senior Engineer, Technical

The individuals from the various Japanese organizations that were visited follows:

ITOCHU TRADING COMPANY

Ryutaro Mashiko	Deputy General Manager, Transportation Project Group
Tsuyoshi Okada	Transportation Project Group
Yoshinobu Yanagimoto	Transportation Project Group

CHUBU-HSST ENGINEERING PERSONNEL

Mitsuru Iwaya	Senior Engineer – Levitation, Guideway, Rail
Yoshihide Yasuda	Senior Engineer – Vehicle Structure
Munenobu Murai	Senior Engineer – Propulsion
Toshikatu Kiyahara	Senior Engineer – Train Control, Braking
Takemi Mikuma	Senior Engineer – Hydraulics

NIPPON SHARYO (VEHICLE MANUFACTURER)

Tomiji (Ted) Ogawa	Director – Engineering Division
Juntaro Miyako	Deputy General Manager – Engineering Division

AICHI PREFECTURAL GOVERNMENT (DEPARTMENT OF PLANNING AND PROMOTION)

Takeshi Gamou	Director, Transportation
Tanio Tanaka	Manager, Transportation
Hidechika Takagi	Deputy Manager, Transportation

AICHI RAPID TRANSIT COMPANY (AKK)

Shunzo Ishimoto	Executive Managing Director
Mitufumi Shimoyama	Deputy Manager

YAHAGI CONSTRUCTION COMPANY

Kenji Sugiyama	General Manager, Technical Planning Division
Susumu Takagi	General Manager, Environmental Division
Kouji Ishikawa	Construction Manager, Civil Construction Division
Toshiyuki Ito	Senior Engineer, Civil Construction Division
Yoshiaki Shingyoji	Engineer

THE MINISTRY OF LAND, INFRASTRUCTURE AND TRANSPORT RAILWAY BUREAU

Atsushi Kawai	Director for International Affairs
Izumi Kawaguchi	Deputy Director, International Affairs Office
Noboru Matsumura	Deputy Director, Facilities and Rolling Stock Division
Minoru Kobayashi	Chief Official of Train Operation Standard
Hiroaki Kii	Chief Official of Electric Standard
Hidenobu Sato	Technical Official, Facilities and Rolling Stock Division
Kazuhiro Namba	Chief Official of Barrier Free Technical
Eiichi Suzuki	Chief Official of Environment Office

3.2 THE TRIPS OBJECTIVES

The primary objective of the two trips to Japan was for the FTA review team to gain first-hand and in-depth understanding of the Chubu HSST system by reviewing its operational performance at the Nagoya test track and by meeting with key people involved in both the design, and the construction and operation of the first low speed commercially operated system in Japan, located on the outskirts of Nagoya.

To meet this objective, an itinerary was established to provide the FTA review team the opportunity to ride the Chubu HSST 100-L series prototype at the Nagoya test track, and to have detailed technical discussions with the senior engineering staff from Chubu HSST involved in the design and testing of the various systems and subsystems that comprise the HSST low speed maglev system.

To address the governmental and regulatory issues associated with the planned commercial implementation of the system on the Tobu-Kyuryo line, meetings were arranged with representatives of the Aichi Prefecture (the regional governmental prefecture where the Tobu-Kyuryo line is located), the Ministry of Land, Infrastructure and Transport (MLIT) and the Japanese federal agency charged with the establishment of safety standards and system certification for commercial operations of maglev systems.

In addition, meetings were held with Nippon Sharyo, the vehicle manufacturer, and the Yahagi Construction Company, the construction company that built the original test track in 1991 and the company that is likely to construct the guideway and perform the civil works for the Tobu-Kyuryo line.

Following is a summary of the Team's itinerary on the first trip:

March 10- March 11, 2002:

Traveled to Tokyo and on to Nagoya on the Nozomi Super Express Shinkansen bullet train.
Traveled to the Chubu HSST test track in Nagoya. Inspected, rode and observed operation of the 100-L series prototype vehicle. Received system overview from Chubu HSST senior engineering staff. Stayed overnight in Nagoya.

March 12, 2002:

Technical discussions with Chubu HSST senior engineering staff at the Nagoya test track facility. Stayed overnight in Nagoya.

March 13, 2002:

Met with Nippon Sharyo, the vehicle manufacturer of both the prototype 100-L vehicle and the train sets for the future Tobu-Kyuryo line.
Met with representatives of the Department of Planning and Promotion and the Aichi Rapid Transit Company (AKK) at the Aichi Prefecture. Later in the afternoon met with Yahagi Construction, the company likely to construct the guideway and perform the civil works for the Tobu-Kyuryo line. Stayed overnight in Nagoya.

March 14, 2002:

Continued technical discussions with Chubu HSST senior engineering staff at the Nagoya test track facility.
Traveled via Shinkansen bullet train from Nagoya to Tokyo.

March 15, 2002:

Met with representatives of the Rail Bureau of the Japanese Ministry of Land, Infrastructure and Transport (MLIT) in Tokyo.
Team members returned to the United States.

Following is a summary of the Team's itinerary on the second trip:

February 2, 2003:

Traveled to Tokyo-Narita Airport where Mr. Michio Takahashi of CHSST greeted and escorted team members to a nearby hotel at Narita Airport

February 3, 2003:

Team flew to Nagoya and arrived in the afternoon, visits the HSST Test Center, viewed the KL new train and held discussions with Chubu HSST team.

February 4, 2003:

The Team visited the construction site of the new HSST Maglev project. In the afternoon the team held a meeting with the Department of Planning and Promotion of Aichi Prefecture Government (local government).

February 5, 2003:

The Team met again with the Chubu HSST team and in the afternoon visited Nippon Sharyo (HSST car manufacturer) in Honohara, Toyokawa about 2 hours bus ride form the City of Nagoya. Following that visit the Team rode the Shinkansen, Japanese High-Speed train for a two-hour ride to Tokyo.

February 6, 2003:

The Team visited Toyo Electric (manufacturer of inter and Linear Induction Motor) in Yokohama about an hour bus ride from Tokyo. In the afternoon the team meet with the Macquarie Company's Tokyo office staff. Macquarie is an Australian company that specializes in project leasing agreements. In the late afternoon the team met with the Ministry of Land, Infrastructure and Transportation staff (Central Government). Afterwards, the team met with Professor Masada, who did much research on the Maglev system in Japan. John Harding and Suhair Alkhatib met with the Central Japan Railroad Company staff who is involved with the high-speed Maglev (300 mph) testing at the Yamanashi test facility to see the status of the Japanese High Speed Super Conducting Maglev System.

February 7, 2003:

Met with Tokyo Metropolitan Government to discuss the new Oedo Subway Line. Afterwards, had an opportunity to ride this new subway line.

The overall objective of these trips was to gain a clearer understanding of the capabilities and limitations of the Chubu HSST 100-L system as it exists today, and evaluate what changes (major or minor) that will be required for the system to meet FTA performance requirements. Also, it gave potential transit agency users an opportunity to see the system up close.

3.3 TEST SITE SYSTEM DEMONSTRATION

On both trips the U.S. representatives arrived in Nagoya at midday. Following lunch with engineering representatives of Chubu HSST, the team walked to the test track located at the CHUBU HSST office site. After an overview of the history of development of the Chubu HSST system, the team was afforded the opportunity to take a number of rides on the 100-L prototype train (a two-car consist) back and forth on the test track. The test track is 1.5 kilometers long and contains segments with grades of 6 and 7 percent. The minimum curve radius along the test section of the track is 100 meters, and at the switch where the 100-S vehicle is located, there is a minimum curve radius of 25 meters.

The team experienced first-hand, the ride quality, acceleration and deceleration performance, and the interior characteristics of the vehicle. During series of test runs, the vehicle accelerated up to a maximum speed of 90-kilometers per hour (km/hr); the maximum speed being limited by the length of the test track. Chubu HSST personnel reported that the vehicle has attained speeds of 100 km/hr on the test track during testing, and that they are confident that the vehicle using the current technologies and subsystem components could sustain revenue service speeds of up to 120 km/hr if required.

The train levitated on command, accelerated and decelerated relatively smoothly, and negotiated the uphill and downhill grades with good traction. Ride quality around the horizontal curves was also very smooth and comfortable, with jerk rates seemingly well within the bounds of the FTA design criteria. Throughout the test runs, the overall quietness of the vehicle was very impressive.

The team also observed the operation of the vehicle from a position adjacent to the high-speed section of the test track. When the vehicle passed by the team at a speed of approximately 90 km/hr, there was virtually no noise audible from the vehicle apart from a slight rush of air. The quietness and smooth operation of the system experienced inside the vehicle were similar to the observations made from the way side.

After riding and observing the operation of the train from the wayside, the team visited the maintenance area to conduct a close-up inspection of the linear induction motor (LIM) modules and other under-car equipment and systems, and to observe the clearances between the LIM modules and the reaction rail when the vehicle is levitated in a stationary position. The team also had the opportunity to observe the operation of the switch between the test track and the siding several times and to take a close look at the way in which the reaction rails are attached to the sleeper system and in turn how the sleepers are attached to the guideway structure. Some team members also took the opportunity to look at the alternative means of attachment of the rail to the guideway that have been tried at various locations along the test track.

3.4 TECHNICAL DISCUSSIONS WITH CHUBU HSST

At the beginning of the technical discussions, Michio Takahashi and Junro Kato provided a general overview of the development history of the Chubu HSST low speed maglev system, and explained that the final detailed design documents for the Tobu-Kyuryo line were submitted. The review team, being generally familiar with the overall design and operational performance characteristics of the HSST-100L system, requested that the discussions be focused on addressing the technical issues raised by the FTA review team.

Several issues were discussed in detail including: suspension, levitation and guidance, propulsion, braking, train control, power distribution, guideway clearance requirements and switch operation. Summary notes of the discussions on each of these topics follow:

It was explained that extensive testing took place beginning in 1991 to verify that the dynamic stability of the levitation and guidance systems were reliable and safe. Testing was part of the system certification that was conducted by an independent review board brought together under the auspices of the then equivalent to the current Japanese Ministry for Land, Infrastructure and Transport (MLIT). Results of the system studies and tests were summarized in an Economic Feasibility Study of Magnetic Levitation Linear Motor Car for Urban Transportation (March 1993), prepared by the Japan Transportation Economics Research Center - Aichi Prefecture.

3.4.1 Suspension (Levitation and Guidance)

The FTA review team questioned the capability of the HSST-100L vehicle at speeds above 100 km/hr, the required maximum speed for the Tobu-Kyuryo line. Michio Takahashi explained that the HSST-100L vehicle is currently certified to run at speeds of up to 130 km/hr (80 mph), and that Chubu HSST is comfortable that the train can perform reliably and safely at this speed without any major modifications to any of the existing subsystems. The system had been simulated through computer modeling at speeds up to 200 km/hr (120 mph) and the data showed that further analysis of the eddy current in the guidance rail ahead of the front levitation magnet would be necessary for speeds at and above 160 km/hr (100 mph).

CHUBU HSST staff explained that the lateral movement of the LIM modules through the curves had been analyzed with a computer model as well as measured during actual testing. The FTA review team asked to review the results of a sample computer simulation, which was provided at the meeting by Chubu HSST. The sample reviewed was for a train set traveling through a 100-meter radius curve with an 8-degree super elevation, at a speed of 40 km/hr (25 mph). This showed a lateral offset of 6 mm, which is below the +/- 15 mm maximum allowable offset, that is, mechanical constraint of the lateral guidance skids of module. Computer simulation is conducted by using analytical semi-3-dimensional model with 27 degrees of freedom derived from vehicle equation of motion and simulation program written in Turbo C++ language. Chubu HSST indicated that their predictions about the performance of the levitation, guidance and other systems have been based primarily on the measured test data from a large number of tests conducted primarily in the early 1990s. They have and do run computer simulations, but they rely first and foremost on actual measured test data. They further reported that side-by-side review of measured data with the computer simulations has indicated a strong correlation between the two methods.

3.4.2 Propulsion

The philosophy of the propulsion system design and an overview of the various components that make up the propulsion system were described. The propulsion system is comprised of linear induction motors and Variable Voltage Variable Frequency (VVVF) drives that are fed from the 1500-Volt DC trolley "power bar." The basic design philosophy is for the controls to maintain a constant slip frequency. The controls maintain a constant slip and constant thrust up to a base speed of 42 km/hr (26 mph) at which point it follows a constant voltage curve. The current remains constant up to the base speed, while the voltage and frequency increase.

To illustrate the propulsion system design, LIM thrust curves were shared and reviewed with the FTA review team. Data presented indicated that the predicted thrust calculations compared very well with the measured test data. The efficiency is lower at low speeds and attains a maximum efficiency of 60 to 70 percent at speeds of 70 to 80 km/hr (44 to 50 mph). Chubu HSST stated that they now utilize a program developed by Professor Nonaka at Kyushu University to develop the LIM calculations and that these calculations have been very close to the measured data during testing.

The design of the Linear Induction Motors (LIM) was then reviewed. The LIMs are convection self-cooled and weigh approximately 175 kg (386 lbs) each. Ten LIMs are used on each vehicle, resulting in a total LIM weight of approximately 1,750 kg (3,860 lbs). The inverters are internally forced-air cooled and weigh approximately 400 kg (880 lbs) each, for the IGBT version that is currently preferred. They generate 1,487 kVa per car with a power factor varying from 78% at 0 km/hr to about 54% at 100 km/hr (62 mph). The input filter is an L-C circuit and weighs approximately 240 kg (530 lbs) for the three-car train set proposed for the Tobu-Kyuryo line. The design magnetic gap for the Chubu HSST system is 14.5 mm including 1 mm of insulation, so the actual physical air gap is 13.5 mm. Smaller gaps have been considered but Chubu HSST considers that this gap is optimal in light of the tolerances to which the reaction rail can be installed and maintained. The concern from an energy consumption perspective is that the bigger the LIM to reaction plate gap, the

higher the energy consumption in proportion to the square of the distance. This is an area where further evaluation of required tolerances to reduce the gap distance could yield significant reductions in system operating costs.

3.4.3 Braking

CHUBU HSST staff explained that the Linear Induction Motors (LIM) provides the primary service braking. In the braking mode, the phase of the AC current in the primary winding on-board the vehicle is reversed, generating a retarding force on the vehicle (reverse phase braking). It was confirmed that inverters instead of rectifiers would be installed at the substations so that regenerative braking energy could be used for other purposes such as facility and vehicle power. The LIMs are used in regenerative mode down to 25-30 km/hr (15-18 mph), in reverse thrust mode down to 5 km/hr (3 mph), with a mechanical hydraulically actuated caliper being used for the final stop. In emergency braking, the hydraulic caliper brakes take over for the complete braking profile. In addition, the brake controller includes a blending function to add to the regenerative/reverse braking when or if necessary to maintain the deceleration rate. The braking sequence and operating mechanisms were described in detail to explain the design and operation of the hydraulic braking system. The master control lever on the operator's console provides manual control of braking and propulsion. When the vehicle is powered and levitating at a station, the hydraulic brake serves as a parking brake. For stops on grade, the vehicle operator is required to activate the parking brake on the grade switch button located on the main console. Each car has two independent hydraulic accumulators, one primary and one standby for redundancy. It was explained that the capacity of the primary accumulator is "two-times" what is needed to bring a train from full-speed to a complete stop. It was further explained that the standby accumulator is sized to bring the train from full-speed to a complete stop, once. Some concerns were expressed by the FTA review team as to some of the hydraulic design details and level of individual component redundancy.

3.4.4 Train Control

It was further explained that the Automatic Train Control (ATC) system, which is used at the test track and proposed for use on the Tobu-Kyuryo line, is based on a contact-less "check-in / check-out" technology commonly used in monorail systems in Japan. A cable tray mounted in the middle of the guideway contains three types of loops each operating at a different frequency. One loop is for velocity detection, the second is for the block occupancy train detection, and the third is for vehicle-to-wayside data transmission. The train is equipped with two antennas, one at the front and one at the back.

The velocity detection loop is set in a 30 cm open / 30 cm closed "wiggly" wire configuration that is detected by the on-board antennas. As the train passes over the loops, the open loop sends a signal to the train (the closed loop cannot send a signal). Since the open loop is at a set distance apart, velocity is computed by measuring the time it takes to pass between loops. Each antenna consists of three coils set in a different pattern. The pattern in which the vehicle receives the signal determines the direction of the train.

The block occupancy loop is the length of a block (between 100 meters to 1 kilometer long). The on-board automatic train protection (ATP) system selects the front (direction of

travel) coil to "receive" the speed codes sent from the wayside ATP equipment, and selects the "transmit" coils for the check-in and check-out signals. The check-in signal is transmitted from the vehicle to the block loop at 15 kHz in front of the vehicle and the checkout signal is transmitted from the vehicle to the block loop at 11.8 kHz in the rear of the train. The third loop is a data communication channel that is used to transmit vehicle and subsystem condition and maintenance data on a continual basis.

There are several other types of train control systems available and Chubu HSST stated it was open to considering other types as long as they provided equal or better train control capabilities at a competitive price. Alternate train control systems will be one of the items evaluated in the forthcoming technical reports.

3.4.5 Guideway Construction Tolerances and Clearance Requirements

The issues of the gap clearance between the Linear Induction Motors (LIM) and the reaction rail and the construction and installation tolerances were discussed. Rail installation tolerances and maintaining such tolerances over time are two of the main reasons for setting the magnetic gap at 14.5 mm. Since the reduction of the magnetic gap could yield savings in energy consumption, a more in-depth evaluation of construction tolerances is one of the items recommended for further study in future technical reports. A summary of the various construction and installation tolerances currently adopted by the Chubu HSST design team will be provided in the chapter on Guideway Design and Construction. Since it was first installed in the early 1990s, there has been minimal adjustment to the rail alignments (horizontally or vertically). However, there is evidence of some movement and rust build up since installation.

The FTA review team questioned what the construction clearance requirements were for maglev and monorail systems in Japan. Particular interest was shown in clearance heights above roadways and other active thoroughfares; clearances for fire trucks; and clearances from the edge of the guideway (including exposed power rails) to adjacent buildings and other structures. Similar to the United States, there are national standards that are generally followed for clearances between structures and roadways. However, the jurisdiction, State or Prefecture in which the project is located, may have special requirements that are more stringent. This issue was further addressed by reviewing the clearances that are being followed in construction of the Tobu-Kyuryo line and comparing them with clearances that are typically recommended in AASHTO publications, or other standards and guideline documents used in the United States.

Other items discussed relative to the guideway were the dynamic envelope of the HSST-100L vehicle and the need for and design of a walkway to provide an emergency means of egress and a means for maintenance personnel to safely access and work on the guideway.

3.4.6 Guideway Switch

The switch used at the Chubu HSST test track is a segmented, mechanical switch, and is used to move the HSST-100S and HSST-100L in and out of the siding for storage while the other vehicle is being tested. The switch is divided into three segments and is moved from the tangent to the turnout position by a 5 HP AC-motor driving an actuator. It takes

approximately 10 seconds for the switch to move from one position to the other. The switch controller is interlocked via the wayside ATP to protect against an "open- ended" switch. The speed through the switch to the siding at the test track is 25 km/hr (15.5 mph). The speed is more a function of the switch curve radius (25 meters) than the design of the switch itself. This type of switch is more than adequate for its purpose at the test track. The MUSA team identified other types of switches that may be more suitable for full-scale commercial applications in the United States. Among the alternatives is a beam replacement switch. The switch design is discussed in more detail in Chapter 4.

3.5 MEETINGS WITH NIPPON SHARYO, AICHI PREFECTURE, AND YAHAGI CONSTRUCTION COMPANY

3.5.1 Meeting with Nippon Sharyo

The meeting took place at the headquarters of the Nippon Sharyo Engineering Division in Nagoya. Nippon Sharyo is the designated manufacturer of the Chubu HSST 100L vehicle for the Tobu-Kyuryo line. Nippon Sharyo was also the manufacturer for the HSST-100S and HSST-100L prototype vehicles at the Nagoya test track. The purpose of this meeting was to familiarize the FTA review team with the capabilities and experience of Nippon Sharyo and to discuss various issues that would need to be addressed in adapting the Chubu HSST vehicles to meet the needs and standards of the United States market.

Tomiji Ogawa, Director of Engineering for Nippon Sharyo, provided an overview of the company history and descriptions of some of the vehicles it has manufactured in Japan and in the United States. Since inception, Nippon Sharyo has built approximately 45,000 aluminum train cars. In the United States, Nippon Sharyo has produced cars for systems in Northern Indiana, Los Angeles (articulated LRVs), Maryland (MARC), and the California Department of Transportation (CALDOT). Nippon Sharyo has also built a number of car types for the Shinkansen bullet train system in Japan.

Nippon Sharyo is responsible for vehicle production for the Tobu-Kyuryo line. It was stressed how critical the time schedule was to meet the September 2004 deadline. The vehicle production team is coordinated by Nippon Sharyo and includes the following major system subcontractors:

- Fuji Electric — Levitation Systems
- Toyo Electric — Linear Motors
- JAMCO — Levitation Module
- Kyosan — Automatic Train Control
- Toyooki — Hydraulic Systems
- Yawata Electric — Communications Systems

The basic design specifications for the HSST-100L vehicle were completed by Chubu HSST in February 2002 and incorporated some subsystem improvements over what are currently used on the current test track vehicle. Completion of the first three-car train prototype was completed in October 2002. The prototype is being tested continuously over the next several months and any needed modifications will be incorporated into the remaining eight, three-car train sets. Completion of all vehicles is scheduled for September 2004 leaving 5 to 6 months available for testing on the actual line prior to the

commencement of commercial operations for the World Expo in March 2005. The staff confirmed that the schedule was on target, but was very tight because of the detailed coordination required among the various subcontractors, some of them having not worked on the previous versions of the Chubu HSST vehicles.

Deployment of the Chubu HSST system in the United States would be subject to Federal "Buy America" provisions, which require 60% of the vehicle or fabrication to be sourced in the United States. Mr. Ogawa stated that Nippon Sharyo was well aware of this provision and had met these requirements in its previous delivery of train cars and systems to the United States. Should the Chubu HSST be selected for a maglev system in the United States, Nippon Sharyo would be comfortable in completing final assembly in the United States and would source parts and materials as appropriate from United States manufacturers.

Other discussions on the vehicle design indicated that the Chubu HSST cars were built to withstand a 34-ton crush loading. The floor is honeycombed for strength and weight reduction. Japan Railways commuter cars are rated at 100-tons. The goal of the vehicle design team has been to reduce car weight since the pay-off for lower weight is significant. Identifying potential ways of reducing car weight through use of lighter weight components and subsystems was an important objective of the MUSA design team. Detailed investigations are for future phases.

The Japanese and United States differing approaches to safety and risk analysis were discussed in regards to vehicles and vehicle testing. FTA representatives described the new United States safety approach, which is not prescriptive, but allows flexibility in design. The onus of system safety is on the car builder rather than the more consensus group approach generally followed in Japan.

The FTA review team asked Nippon Sharyo to identify key design challenges for finalizing the design of the HSST-100L vehicle for the Tobu-Kyuryo line. In summary, design challenges are weight, cost and noise. A number of new subsystems are being considered for the new vehicle; the weight as previously discussed is obviously very important, as is cost and noise. The current vehicle is very quiet, and the design team wants to keep it that way since low noise is one of the major reasons the Chubu HSST system was selected for the Tobu-Kyuryo line.

3.5.2 Meeting with Aichi Prefecture

The MUSA and FTA team members met with representatives of the Department of Planning and Promotion of the Aichi Prefecture Government, which is the prefecture of Nagoya where the Tobu-Kyuryo line is to be constructed. Representing the Aichi Prefecture were: Takeshi Gamou, Director, Transportation; Tanio Tanaka, Manager of Transportation, and Hidechika Takagi, Deputy Manager of Transportation. The purpose of the meeting was to address the construction of the Tobu-Kyuryo Line, anticipated ridership, route characteristics, and why the Chubu HSST system was selected over other systems. Discussions on anticipated capital costs, operations and maintenance costs, the fare box and anticipated payback period and other factors affecting the financial viability of the system were also part of the meeting.

In March 2005, the 2005 World Exposition (Expo) will open several miles to the east of Nagoya, Aichi, Japan. Tobu-Kyuryo Line is planned to provide a connection to the nearest station on the Nagoya subway station at Fujigaoka and terminate at the Yakusa Station while passing the Expo 2005 site. The purpose of the line is to serve the Expo site as well as encourage economic growth in the area.

The planned system is 9.2 km long – the first 1.8 km is in tunnel, the remaining 7.4 km is elevated. There are 9 stations in total, with the average distance between stations being a relatively short 1 km. The hilly nature of the terrain, with areas of 6 to 7% grades, meant that a conventional light rail or a monorail system would require greater guideway and civil work costs because those systems in Japan are limited to 3.5% grade. The Aichi Prefecture officials indicated that the civil work costs for the competing elevated rail alternatives were projected to be approximately 50% more than the Chubu HSST costs. Aside from the cost, Aichi Prefecture selected the Chubu HSST system because of its quiet operation, low vibration, and anticipated lower operational and maintenance costs. The Aichi residents who were canvassed about the project consider quiet operation a very important attribute. The Aichi officials reported that feedback from residents who have ridden and observed the operation of the HSST-100L vehicle at the test track have been very positive in this regard. This has resulted in the Chubu HSST system being considered for use in future expansions of the Nagoya regional rail network.

The Aichi officials shared the following cost information with the MUSA and FTA review team. However, it is important to note that the costs are tied to the specific characteristics of the Tobu-Kyuryo alignment, which includes a tunnel section of 1.8-km, nine (9) stations, and difficult terrain. In addition, the costs reflect the construction cost in Japan and the assumption of driving the foundation /piles for the guideway columns down to refusal (as was discussed in the meeting with Yahagi Construction later in the day).

The overall system cost including guideway, stations, vehicles, power and all other support facilities was projected at $105 Billion Yen, which at current exchange rates (US $1 dollar = 120 Japanese Yen) is equivalent to approximately US $875 million. It was reported that 60% of the system cost ($560 million) will be provided by the Federal, State (Aichi) and City governments, and the remaining 40% ($340 million) by the Aichi Prefecture and private company investment grants and loans. The above costs do not include right-of-way acquisition since the guideway passes through a tunnel, down the median of the roads and across University lands that are already controlled by the Prefecture. Comparing costs of the elevated sections to the section in tunnel, Aichi officials stated that the average cost per kilometer for the elevated guideway sections was 8.5 Billion Yen (US $70 million), and for the tunnel section 24.5 Billion Yen (US $204 million). The cost includes guideway, stations, power and other facilities and infrastructure.

The Aichi officials stated that it was anticipated that the operation of the system would be self-sustaining. Yearly operating costs estimated at $2.3 Billion Yen (US $19.2 million) per year were reported as being made up of the following:

Personnel	US $4.6 million	24%
Running Costs	US $5.4 million	28% (See breakdown below)

Taxes	US $2.3 million	12%
Debt Service	US $6.9 million	36%

Projected annual "Running Costs" were summarized as follows:

Guideway Maintenance	US $0.31 million	6%
Power	US $1.00 million	19.5%
Secondary Electrical	US $1.15 million	22%
Vehicles	US $0.85 million	16.5%
Traffic / Stations	US $0.85 million	16.5%
Miscellaneous	US $1.00 million	19.5%

Average rider ship for the system is projected to be 31,000 passengers per day; the break-even rider ship is projected at 26,000 passengers per day. The fare box for the system is targeted to be equivalent to the bus system, which is 200 Yen (US $1.66) for the first 2-km then 60 Yen (US 50 cents) per km thereafter. It is anticipated that the 40% of the system cost provided by the Aichi Prefecture and private investors will be recovered after 21 years.

It should be emphasized that the costs presented above are specific for the Tobu-Kyuryo Line. Costs include the tunnel sections, alignment site constraints, nine stations, elevated guideway, and infrastructure construction in accordance with Japanese methods. An evaluation of costs for a hypothetical site in the United States will be presented as part of a later chapter.

3.5.3 Meeting with Yahagi Construction Company

Following the meeting with the Aichi Prefecture, another meeting was held at the office of the Yahagi Construction Company (Yahagi), which is the construction company that will likely construct the guideway and civil works for the Tobu-Kyuryo Line. Yahagi was responsible for constructing the Chubu HSST test track at Oe in Nagoya, so members of the company are quite familiar with the tight construction tolerances and other special requirements of the guideway and civil works for the Chubu HSST system.

The General Manager of the Environmental Division, Susumu Takagi, and several senior engineers and construction managers were made available to answer the questions of MUSA and the FTA review team. Initial questions centered on the codes and standards to which guideways, and the associated civil works, are designed and constructed within Japan. The design criteria for the guideway and civil works are the same general design criteria adopted for road, bridge and railroad structures in Japan. These include:

Road and Bridge Design Criteria
Railroad Construction Design Criteria
JNR Construction Design Criteria
Medium Capacity Guided Transit and Monorail Construction Design Criteria

The design and construction responsibilities for the Chubu HSST Tobu-Kyuryo Line are as follows: The Chubu HSST engineers establish the general design criteria and construction tolerances with some standard design details. Engineers within the Aichi Prefecture, supplemented by a third party professional design firm, prepare the detailed design based

on the Chubu HSST design documentation. Yahagi then builds the guideway and civil works in accordance with the detailed design. The construction approach follows the traditional design then bid then build approach where the contractor has limited input into the design. The representatives from Yahagi therefore had few comments to offer on cost reduction ideas in terms of either design or construction.

In the United States the design/build approach where the contractor receives base design criteria but develops the detailed design itself, is becoming more prevalent. Giving qualified contractors the opportunity to inject their own special experience and technical innovation in a bid response may yield more cost savings than the more traditional design-bid-build approach.

One of the main concerns of the FTA review team was how the construction team managed to achieve the tight construction tolerances called for in the design. The Yahagi engineers explained that the columns supporting the guideway beams would be taken down and founded on bedrock so that settlement should not be an issue. They indicated that this was a standard approach in Japan. While this approach may seem to be ideal, it could be impractical and very expensive when dealing with sites where solid bearing is not close to the surface. While minimizing settlement through good foundation design would be an objective for any system, the ability to accommodate settlement through adjustability of the rail support system is equally important. The current rail fixation technique is to place a steel sleeper system on top of the guideway beam at a spacing of approximately four feet. Shims on either side of the sleeper allow the rail to be adjusted both laterally and longitudinally to the required tolerance. In the event of settlement, shims can be added or removed to compensate.

In reviewing the performance of the Chubu HSST test track at Oe, of Chubu HSST indicated that some initial problems were corrected during initial construction and only very minor adjustments have been made to the test track since that time. The characteristics of the vehicle design where each LIM can move independently of the other, coupled with the minimal adjustments to the rail alignment that have been made over the years indicates that the construction tolerances as stated in the Chubu HSST design criteria may be more conservative than necessary. This issue will be explored in more detail in the forthcoming guideway design chapter. Another idea that could reduce costs and improve guideway aesthetics is the use of direct rail fixation to the guideway, eliminating the use of sleepers. Any direct rail fixation technique will need to incorporate the use of shims in order to provide for future adjustment in the event of differential settlement between spans.

In summary, the meetings with Nippon Sharyo, the Yahagi Construction Company, and the Aichi Prefecture demonstrated that many years have gone into the development of the system from a vehicle, civil construction and regulatory oversight standpoint. The meetings also confirmed that from a regulatory and practical perspective, the system is mature enough to be implemented commercially in Japan. With some modifications to meet United States standards, the MUSA team is confident that the system could be constructed for commercial operation in the United States.

3.6 OTHER TECHNICAL DISCUSSIONS WITH CHUBU HSST

3.6.1 Train Control

A description of the overall ATC concept was presented. CHUBU HSST staff explained the hierarchy of the ATC, ATP and ATO systems as implemented in Japan, and went into more detail in explaining **Figure 3-1** Signaling System (ATP/TD). The inductive radial (IR) cable is used to communicate with the vehicle for train detection and ATP. Train detection is based upon the check-in/check-out philosophy using the frequencies of 15 kHz and 11.8 kHz respectively. The speed of the train is compared to the set speed restrictions based upon the location of the guideway, and the speed is adjusted accordingly. Mr. Kiyahara explained that this philosophy is not unique; it is the same philosophy that is used throughout Japan on all automated systems. For the Tobu-Kyuryo Line, Mitsubishi Electric will be used as the supplier and overall integrator, with some components coming from Kyosan. Both companies are well known ATC suppliers in Japan.

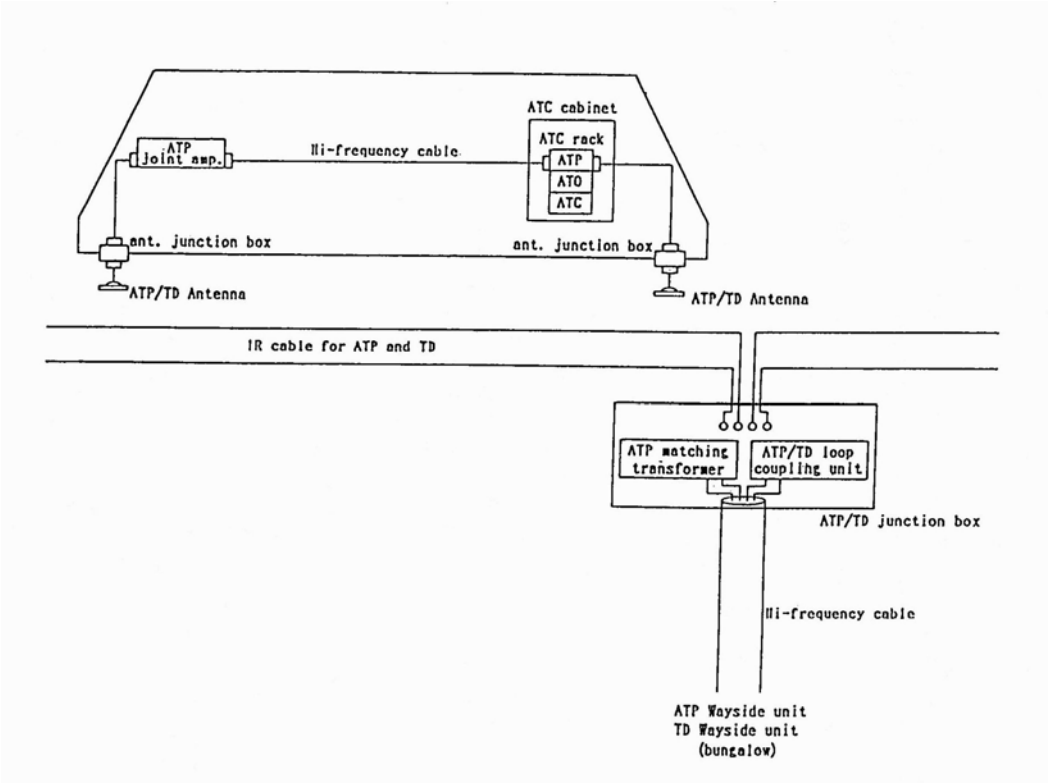

Figure 3-1 Signal System (ATP /TD)

In an effort to conserve time, Toshikatu Kiyahara and George Anagnostopoulos left the main meeting for some side discussions on further details of the ATC concept.

3.6.2 Speed

The System can travel up to 130 kph with no design changes. Both the vehicle and the guideway can support this top speed. In order to achieve 160 kph, significant studies and recertification will be necessary for the vehicle and the guideway.

The levitation magnets and the LIM/Rail Eddy currents are the major concerns. Other factors that must be analyzed are: the LIM thrust curve expansion and the added power for

the inverters, the APU rating power increase, the guideway construction tolerances, the guideway stiffness level of 1/1500 for ride quality, and the power pick-up tracking at 160 kph speed. Vehicle weight for the 160 kph will be substantially affected by the above impacted subsystems.

The FTA acceleration requirement is higher than the current design criteria for HSST-100L vehicle, but it is achievable. However, Chubu HSST feels that will be unacceptable from a ride quality point of view. The LIM thrust vs. speed characteristics can be optimized to conform to a specific application.

3.6.3 Curves

The FTA criteria for vertical and horizontal curves are less than present vehicle capabilities. The shorter HSST-100S vehicle can operate in a 25-meter horizontal curve and a 1,000-meter vertical curve. The HSST-100L due to its added length can operate through a 50-meter horizontal curve and 1,500-meter vertical curve. The HSST-100L vehicle can operate in the 1,000-meter vertical curve at the test track because the suspension is active and they accepted an encroachment in the dynamic clearance envelope.

3.6.4 Acceleration

Increasing the acceleration level and the top speed would require a "new" LIM design. Chubu HSST expressed concern on ride quality and safety at these levels for a driverless application with standing passengers.

3.6.5 Guideway

As above with the various vehicle characteristics, increased stiffness and more rigid tolerances will be required to maintain ride quality at higher speeds resulting in redesign of the guideway components.

Chubu HSST provided "comfort" data curves on ride quality for various speeds showing that this system has a ride quality that is above the typical transit system ride quality.

3.6.6 Cost Model

Further discussions with the Aichi Prefecture personnel about the cost of the various system elements and a cost model ensued. The confidentiality of the numbers is a major concern to the MUSA Team. Aichi Prefecture agreed and provided additional information later.

3.6.7 Safety and Security

The crashworthiness concept in Japan is approached differently than in the U.S. Because of "advanced" ATC, the collisions are considered to be an extremely remote possibility. Therefore, the vehicle designs are not required to include such certifications. The Chubu HSST vehicle does however include a compression capability of 34 tons. The FTA approach of including a crumple zone would require significant redesign. The FTA recommended looking into the honeycomb structural capabilities to meet and save weight.

With regards to the System Safety criteria, MUSA has a future deliverable which will address these matters, and Chubu HSST is in the process of performing for a failure mode analysis.

3.7 MEETINGS WITH RAIL BUREAU OF THE JAPANESE MINISTRY OF LAND, INFRASTRUCTURE AND TRANSPORT (MLIT)

This meeting was held in the Tokyo office of the Itochu Trading Company. Michio Takahashi opened the meeting with some brief comments describing the various groups that were represented.

The key issues discussed are summarized as follows:

- Mr. Noboru Matsumura described the Government's role in Railway Transportation: Their operations responsibility to the Railway Companies is safety and service with three main roles being:
  Master Plan for High Speed Rail in Urban Areas
  Subsidize Railway Investment
  Set Safety Standards and Guidelines for Systems and Big Picture Setting for Operations.

- MLIT has undergone a massive de-regulation in the last 3 to 5 years. The Safety Standards have been changing. On April 1, 2002, new standards will be initiated to increase the level of quality and to allow railroad companies to make product decisions. For example, previously the government was setting detailed rules and standards like what kind of windshield to be used. MLIT felt that this kind of rules discouraged development of new technology. So with the new standards, the rules will set the performance requirements and let the railroad companies decide on the windshield.

- A system like HSST is a good example of how this new approach is implemented, since it is an innovative system technology.

- With regards to certifying the HSST System, the MLIT had set up a committee for establishing safety standards. This committee consisted of representatives of the Government, university professors, and HSST engineers. The committee held a series of discussions from 1989 to 1993. The committee determined that there were no technological problems with the HSST System; therefore, it was given an approval for commercial operations.

- MLIT is now doing a study of the Safety Standards for construction and will develop a manual defining overhaul times and emergency operational procedures. Once this manual is reviewed and approved, the system will be able to start commercial operations.

- The HSST System was initially approved for commercial operation in 1993. The System is being implemented now because most of the public transit growth has been through extension of existing lines, which precluded the application of a new system like the HSST System. Another reason is that after the earthquake in Kobe, there was a significant stoppage on private investment.

- The HSST system is expected to be quiet and have low maintenance. The only possible downside of the HSST System is the ability to interface with the existing systems. It obviously cannot interface at the same station on the same tracks. However, they feel that it will be very beneficial for new areas to adopt it for urban and intercity applications.

- MLIT is also doing some research on the superconducting systems, as in the Germany's Transrapid System. The LSM primary is imbedded in the guideway. Construction of the primary coil is very expensive and cost recovery will be difficult. This is why it has been thought that the construction of the line between Hamburg and Berlin has been stopped. The only place in Japan where this may be applicable is between Tokyo and Osaka – the 500 km trip. This technology is very limited in its application. This will not replace the bullet train but may provide a higher level of service.

- The MLIT also mentioned that it is involved in the operation of a 19 km test track (operation since 1998) and had no problems with the technology. However, there are three issues that remain to be resolved: endurance testing, aerodynamic noise, and construction cost. MLIT has a three-year program now to work on these items. Also, if the three different coils that now exist (propulsion, levitation and guidance) can be combined into one compact coil, MLIT feels that cost can be cut. They estimate about $50 Billion Yen for Tokyo to Osaka connection (500 km) with about 70% in tunnel.

- The HSST system with LIM is a lower cost alternative and more desirable for urban applications.

- FTA staff indicated that in the U.S. they have recognized a similar problem with prescriptive standards, which tend to inhibit development of new technologies. In 1996 the FRA established a Railroad Safety Advisory Committee to investigate safety standards. New performance based safety standards are almost ready to be released – Notice of Proposed Rulemaking. One of the developments that have instigated this is the advent of new train control systems.

- FTA will incorporate these new standards, which will make it easier for new technologies to get approved. The Japanese would only have to demonstrate safety – both qualitatively and quantitatively – with simulations, etc.

- Standards for Development and Use of Processor-Based Signal and Train Control Systems, 49 CFR Parts 209, 234, and 236.

- Gopal Samavedam asked if it is the goal of the ministry to help with the financing. Mr. Matsumura responded that all projects are reviewed for their needs. The Tobu-Kyuryo line is using roadway funds.

- Frank Raposa asked to clarify who was on this committee that revised the standards for the unconventional systems. Mr. Matsumura stated that it was a joint development by the group, and will apply not only to the HSST system but also to monorails, APMs, and all other non-conventional transit systems. They use Railroad Technical Research Institute (RTRI) engineers as well as industry representatives and college professors.

- Now with this guideline, each company must establish its own safety standard and submit it to the government for approval. At the request of the FTA team, Mr. Izumi Kawaguchi delivered a copy of RTRI (in Japanese) to Frank Raposa of the FTA Team on Friday afternoon prior to his departure.

- George Anagnostopoulos asked if the MLIT would conduct tests prior to authorizing the system to commence operations. Mr. Matsumura responded that HSST already did a number of tests based upon their requests. There will also be completion tests based upon these earlier tests. They will also do research to see if the local staff understands the system and is ready to operate it. Also they will conduct operational testing by introducing problems to check out the staff's performance. These completion tests are not technology based but operationally based tests.

- Once operational, if an accident occurs, an independent committee of railway people is formed to investigate it.

3.8 TEST RIDE ON OEDO LINE

The Team met with the Tokyo Metropolitan Government to discuss their Oedo line. This is the newest subway line in Tokyo. Because it is the newest is was required to be deeper than the existing subway lines and existing utilities. In Tokyo if the tunnels are 50M below surface there is no requirement to purchase a subsurface easement. Approximately 80% of the system is under public right of way. In an effort to reduce cost, the system was constructed with a smaller diameter tunnel. To accomplish this they utilized a linear induction motor. This allowed for a smaller diameter wheel (610mm vs. 860mm) and therefore a smaller tunnel. The smaller diameter wheel does cause a 50% greater wear rate. The yards & shops were both constructed using cut & cover and operate as an underground facility. The vehicle is capable of climbing a 5% grade where the conventional system can only climb a 3.5% grade. With deeper stations/tunnels the ability to climb steeper grades was important.

The government did not keep O&M cost data to compare their conventional subway systems to the LIM system. One long-term maintenance issue was the need to maintain the air gap between the reaction plate and the LIM. The standard air gap is 14mm and adjustment is required at or below 12mm.

The Team rode this line to and from the meeting. There was a noticeable reduction in the motor noise generation. The ride quality was exceptional for a steel wheel/steel rail system. Based on experience, in order to produce a quality ride (little to no lateral sway) they must have a stringent tolerance on the track installation and a high level of alignment maintenance.

3.9 SUMMARY

The primary objective of the trips to Japan by the Federal Transit Administration (FTA) review team was for the FTA review team and transit agency representatives to gain a first-hand and in-depth understanding of the Chubu HSST system by reviewing its operational performance at the Nagoya test track and by meeting with key people involved in both the design of the system, and in the implementation of the first commercially operated system on the Tobu-Kyuryo line located on the outskirts of Nagoya, Japan.

The in-depth analysis and review enabled the FTA review team to closely evaluate two critical objectives of the FTA's Urban Magnetic Levitation Transit Technology Development Program:

- Evaluate the technological readiness of the Chubu HSST low speed maglev system for possible use in the United States.

- Identify subsystems and other areas where the use of advanced technologies may improve the safety, reliability and/or cost effectiveness of the system should it be implemented in the United States.

As a result of these trips to Japan, it is clearly evident that the system developed by Chubu HSST over the past 30 years has reached the stage of development and maturity where it is ready to be implemented commercially. The system has been tested at the test track facility for more than ten years and has been issued a license to operate commercially following review of system safety and reliability by the Japanese Ministry of Land, Infrastructure and Transport (MLIT). From an economic, environmental and commercial operation perspectives, the Aichi Prefecture has also completed system review, which is the overall sponsor of the Tobu-Kyuryo system. The design and testing has been satisfactorily completed, vehicle production and construction of the guideway and civil works is underway.

Although the system has been approved for commercial operation in Japan, efforts are still being made to improve various subsystems to increase reliability, reduce weight, and enhance the overall operational characteristics of the vehicle and system as a whole such as noise reduction and performance improvements. Although the window of opportunity for making improvements to the system to be deployed on the Tobu-Kyuryo line will close shortly in order to lock-in the final design of the vehicles for production, the FTA review team and MUSA team members identified several areas where further technological improvements to vehicle subsystems, guideway, and infrastructure would be worth pursuing in order to further enhance system safety, reliability and cost effectiveness. Details of those potential improvements are covered in more detail in future phases of this system.

4 GUIDEWAY and CIVIL WORKS: PRESENT CONFIGURATION and DESIGN POTENTIAL MODIFICATIONS and IMPROVEMENTS

This chapter evaluates the potential implementation of the Japanese Chubu-HSST (CHSST) low-speed maglev system in the United States. As the title infers, the focus of this chapter will be on the design and construction of the guideway and other civil works associated with the CHSST system. The chapter will examine the current design philosophy adopted by CHSST for its systems in Japan; compare the current design philosophy with the criteria contained within the Federal Transit Administrations (FTA) General Requirements Document; evaluate areas where the current design would be modified to meet FTA design criteria and other United States codes and standards; and identify potential improvements in the design and construction of the guideway and civil works with a view to incorporating new technologies and ideas to make the system more cost-effective.

The first part of the chapter documents the design philosophy and configuration characteristics of the "guideway and civil works" that have been developed over the past several years by the CHSST design team for the application of its systems in Japan. This design philosophy is reflected in the design details that have been adopted for the construction of the Tobu-Kyuryo line in Nagoya, Japan. The guideway and civil infrastructure are scheduled for completion in the third quarter of 2004. When completed the system will be the first commercially operating system in the World

This chapter includes a comparison of the current CHSST operational and design criteria with the operational and design criteria targeted within the FTA Low Speed Maglev Technology Development Program "General Requirements Document" (draft dated August 2001). Key criteria that are met or not met will be reviewed and comments made with regard to the importance of such criteria to overall system performance and the application of the CHSST system for certain urban settings.

In addition to the design of the guideway itself, other major components of the associated infrastructure such as switches and stations are discussed. Key issues that affect the design and subsequent overall cost of the system, such as the provision of emergency walkways, corrosion protection, snow, icing and extremes in temperature variation, will also be discussed.

4.1 GENERAL ARRANGEMENT

4.1.1 Overview

Although not exclusively required, there are many reasons why fixed elevated guideways are the preferred means of support for both low-speed and high-speed maglev systems. Elevated guideways promote safety by providing an exclusive right-of-way that eliminates at-grade crossings and isolates the operation of the vehicle from people, animals and other traffic. Their isolation from traffic also promotes reliable and predictable frequency of service providing convenient means of travel in urban environments. The column spacing and beam lengths of the guideway structures can generally be adapted to meet the alignment characteristics of tight urban settings with minimal impact to existing buildings, underground utilities and other infrastructure. The ability to locate the guideway in public rights-of-way such as the roadway median helps minimize land acquisition, overall construction costs, and minimize environmental impact.

The general arrangement and materials of the guideway designed by CHSST for the Tobu-Kyuryo line is very similar to the materials and structure types that would be constructed in the United States. The general design approach, construction and detailing closely mirror methods that have been used successfully over the last several decades for guideways supporting monorails, AGT systems and other above-ground people mover systems.

The CHSST guideway consists of precast concrete box beams / girders supported by cast-in-place concrete piers, which in turn transfer loads through cast-in-place pier foundations to the ground. While it is understood that for the Tobu-Kyuryo line, it is intended to take the foundations down to solid rock, other methods can be employed to spread the loads to the ground to meet the settlement criteria of the structure in an economical fashion. Examples are friction piles and spread footings. The choice of foundation support is project specific and dependent on the existing soil conditions along a particular alignment.

In the case of the CHSST system, the module bogies, which incorporate the linear induction motors (LIM) and magnets that provide levitation and propulsion, are located on the underside of the vehicles and wrap around a reaction rail that is attached to the guideway beam through a series of steel sleepers. The guideway is therefore essentially passive with no motors or other major components attached, as opposed to other systems where motors providing the driving force are mounted on the guideway. A perspective view of the train and the way in which the module bogies wrap around the reaction plate and rail is provided in **Figure 4-1**. This figure provides a schematic overview of the relationship of the key components of the guideway and vehicle, including the girder, sleepers, rail, reaction plate and the linear induction motor/levitation magnet module.

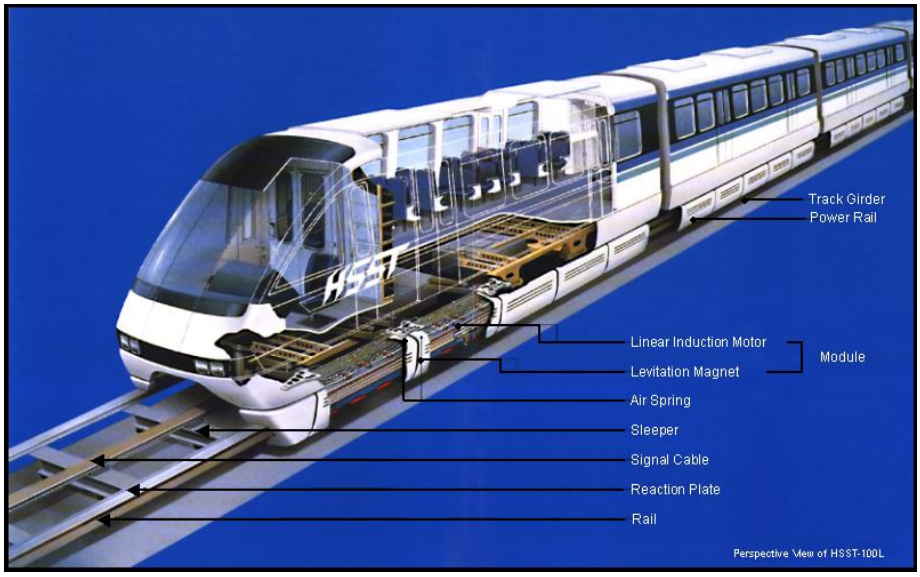

Figure 4-1 Perspective View of CHSST-100L

The inter-relationship of the vehicle and guideway components is further illustrated in **Photo 4-1**, which shows photographs of the CHSST-100L vehicle at the Oe test track in Nagoya, Japan.

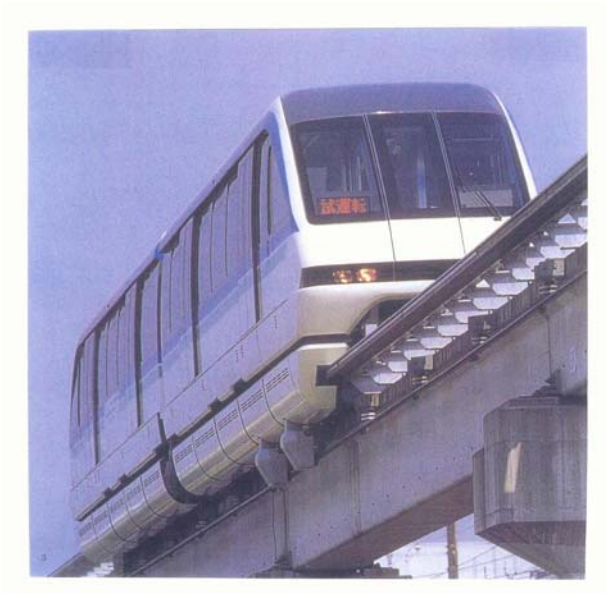

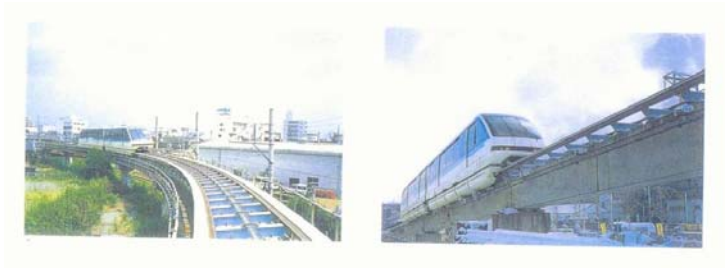

Photo 4-1 CHSST-100L Vehicle at Oe Test Track

4.1.2 Sleeper and Rail System

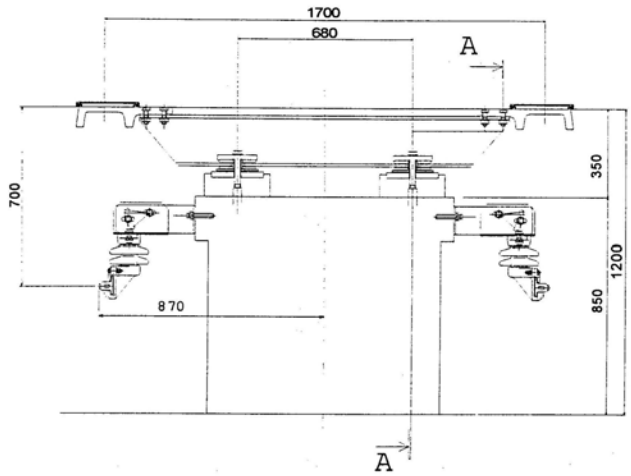

Figure 4-2 Cross Section Through Guideway Girder

While the precast guideway beam / girder does not support any motors, it does support the sleeper, rail and reaction plate system that provides the guidance pathway for the train. CHSST uses the steel sleeper system, because in their view and experience, the sleepers and rails can be manufactured to a tolerance that provides for efficient installation of the rails in the field. In Section 4.8 of this chapter, alternative means of fixation, which are aimed at eliminating the sleepers and improving the aesthetics of the guideway, will be discussed. However, since the sleeper system is used at the Oe test track and is intended to be used along the Tobu-Kyuryo line, the sleepers will be included in subsequent discussions of loads, load combinations, alignment tolerances and construction tolerances. The general arrangement of the sleepers, rail / reaction plate and trolley relative to the guideway beam is shown in **Figure 4-2**.

A perspective view of the sleeper / rail assembly from the train is also shown in **Photo 4-1**. The sleepers are manufactured of hot-rolled structural steel and are fastened rigidly to the precast girder by two anchor bolts 22 mm in diameter. The sleepers are spaced at approximately 1.1 m (3.6 ft) along the precast girder. Where the sleeper attaches to the girder, there are several steel plates that allow for adjustment of the sleeper during installation. The rail is made from hot-rolled atmospheric steel suitable for welded structures. The general shape of the rail is as shown in **Figure 4-3**.

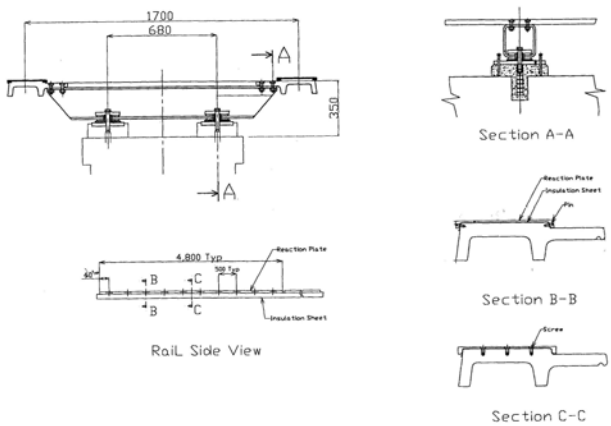

Figure 4-3 General Shape of Rail

The rails are manufactured in lengths of approximately 10 m (33 ft). Straight and slightly curved rails are formed by hot-rolling, and deeply curved rails are either fabricated from steel plate or bent by bender machine. At the end of each rail the rails are connected by steel joints and tie plates to accommodate thermal expansion and contraction. The reaction plate that is attached to the top of the steel rail (as shown in Sections B and C of **Figure 4-3**) is extruded aluminum. **Photos 4-2** and **4-3** provide a view of the rail assembly from above and below respectively. The standard reaction plate length on a straight section of track is 5 m (16.5 ft). Curved sections are fabricated from several short pieces of plate. An insulation sheet is placed between the reaction plate and the rail then, it is fixed in place down the center of the reaction plate with flat head bolts (see "Rail Side View" in **Figure 4-3**).

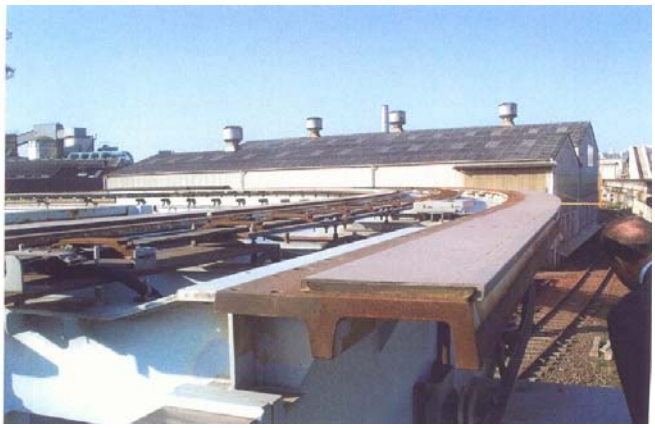

Photo 4-2 Rail Assembly

4.1.3 Guideway Superstructure and Substructure

Span lengths of the precast concrete beams / girders will vary depending on the alignment characteristics, but typically a standard length of 20 to 23 meters (65 – 75 feet) is targeted for reasons of economy and the practical consideration of transporting the beam from the precast yard to the erection site. The height of the cast-in-place piers will vary depending on the characteristics of the alignment and topography, but it is generally targeted at 5 to 10 meters (15 – 30 feet) to provide adequate clearance over existing infrastructure and roads. Although the requirements of local building codes will govern clearance heights, experience in the past has indicated that the distance from roadways to the underside of a pier cap should be a minimum of 14 feet to provide clearance for trucks and life safety vehicles. **Figure 4-4** shows an elevation and a cross section through a guideway illustrating typical girder spans and pier heights.

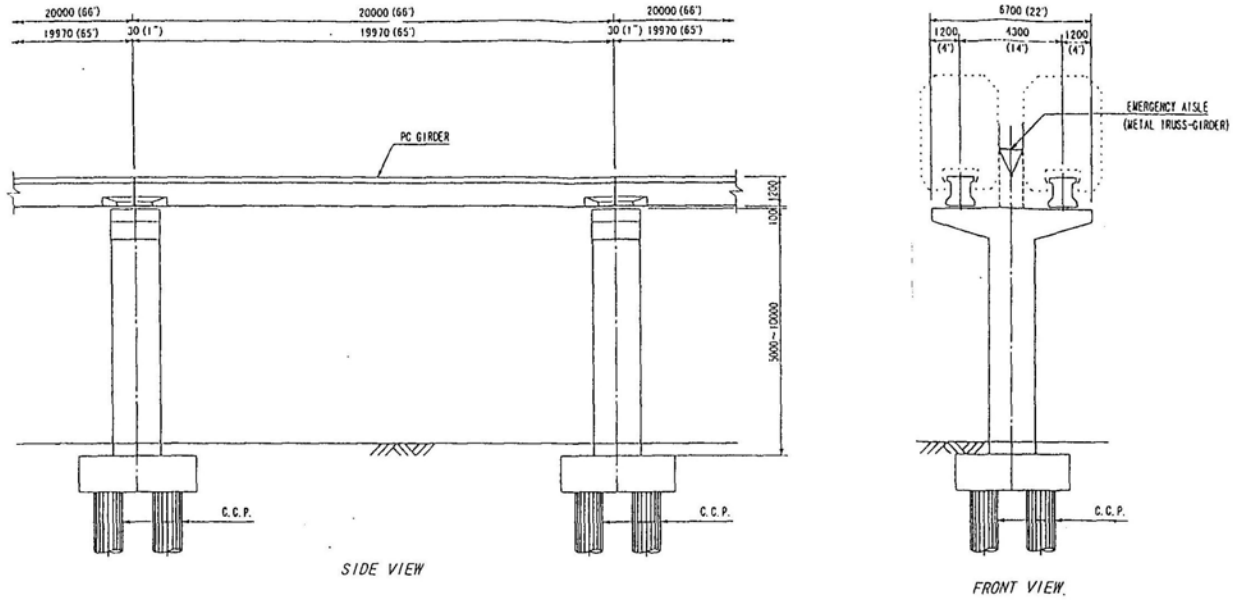

Figure 4-4 Typical Guideway Elevation and Cross Section

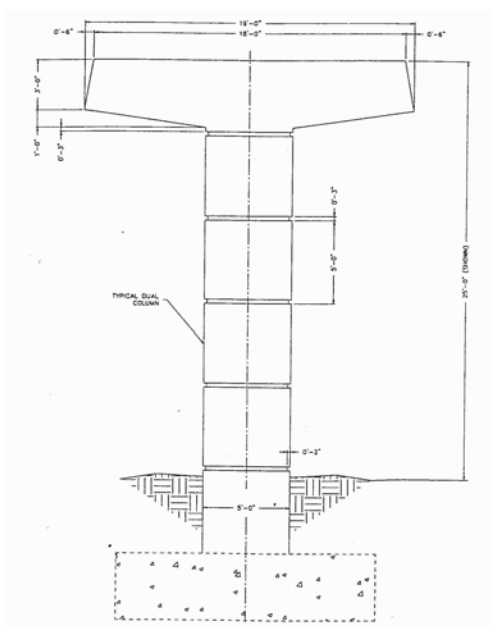

Figure 4-5 Cast in Place Pier (Front View)

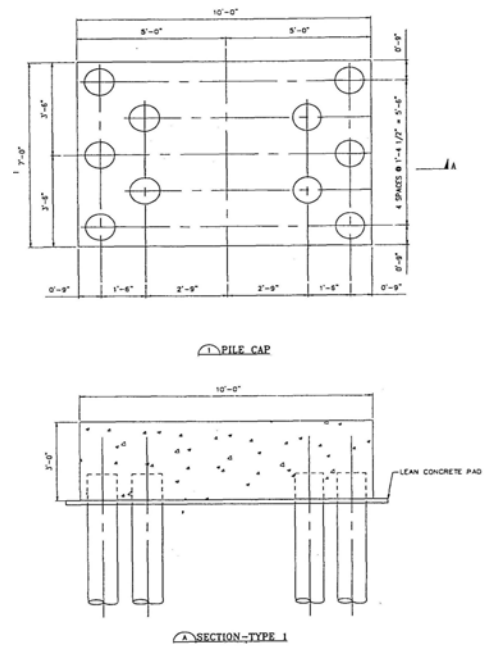

Figure 4-6 Pile Cap (Plan and Section)

The dimensions of the various elements comprising the guideway will of course depend on the loads and load combinations imposed by the train consist selected for a particular alignment. However, the following figures give a sense of the dimensions of key structural elements for a CHSST system that was previously studied for possible implementation in the United States. **Figure 4-5** shows a front view of a 6.4 m (21 ft) "clear height" cast-in-place pier, of 1.5 m (5 ft)

diameter, with a 5.5 m (18 ft) wide x 1.2 m (4 ft) deep pier cap. This pier cap is dimensioned to accommodate a dual guideway with an emergency walkway mounted in between. **Figure 4-6** shows a plan and section view of a pile cap of overall dimension 3 m (10 ft) long x 2.1 m (7 ft) wide x 1 m (3 ft) deep utilizing 0.3 m (12-inch) diameter drilled piles, the length, number and spacing of the piles being dictated by the ground conditions.

While the predominant material of choice for the guideway is concrete (in precast and cast-in-place forms), structural steel is also used in the design of supports for special trackwork such as switches, at maintenance facilities and where appropriate at stations and other support facilities. The standards and codes, which apply when designing concrete and steel guideways in the United States, are discussed Section 3.0.

4.2 APPLICABLE UNITED STATES CODES AND STANDARDS

4.2.1 Overview

Consistent with the Federal Transit Administration's (FTA) "General Requirements Document" it has been assumed that an elevated guideway will be used wherever practicable. As stated earlier, elevated guideways promote safety by providing an exclusive right-of-way that eliminates at-grade crossings and isolate the operation of the vehicle. This isolation from other traffic also promotes reliable and predictable frequency of service, providing a convenient means of travel. The discussion of applicable United States codes and standards will therefore focus on those that apply to elevated guideway structures. Other elements of the infrastructure of a maglev system such as maintenance facilities, operations centers, substations and other structures would be built in accordance with the building codes applicable to the construction of concrete and steel structures.

4.2.2 Principal Reference Documents

The three principal reference documents used for the design of the guideway and associated structures in the United States will be:

(i) American Association of State Highway and Transportation Officials (AASHTO) LRFD Bridge Design Specifications, 2nd Edition, 1999

(ii) American Association of State Highway and Transportation Officials (AASHTO) Standard Specifications for Highway Bridges, 16th Edition, 1996

(iii) American Concrete Institute (ACI) ACI 358.1R-92 Analysis and Design of Reinforced and Pre-stressed Concrete Guideway Structures

These documents have been widely used in the design of elevated guideway structures in the United States and provide known, well proven, and accepted standards to which the design of the CHSST system can be referenced. The documents provide minimum requirements for the various forces and loads acting on the guideway (wind load, snow and ice loads, earth pressure, seismic forces, etc.) prescribe how the various loads and forces will be evaluated in combination to assess the final design of the structures. While they are widely recognized standards, the key to applying them to the design of the CHSST system will be incorporating the construction tolerances and special loads and load cases unique to the operation of a maglev system and the

CHSST system in particular. These loads and load combinations are discussed in more detail in the section of the chapter addressing Design Criteria.

4.2.3 Other Applicable Codes and Standards

While the three principal reference documents provide good guidelines for the design of the guideway structures, there are several other codes and standards that are relevant when designing the guideway and other structures associated with the system. These are listed below:

- American Society of Civil Engineers (ASCE) ASCE 7-98 "Minimum Design Loads for Buildings and Other Structures"
- ASCE Automated People Mover Standard – Part 1 – ASCE 21-96
- ASCE Automated People Mover Standard – Part 2 – ASCE 21-98
- ASCE Automated People Mover Standard – Part 3 – ASCE 21-00
- Uniform Building Code (UBC) and California Code Title 24 for Seismic Zones 4, 3, 2A, 2B, 1 and 0
- National Fire Protection Association (NFPA) NFPA 130 "Standard for Fixed Guideway Transit and Passenger Rail Systems, 2000 Edition
- Americans with Disabilities Act (ADA) 49 CFR Part 38 ADA Accessibility Specifications for Transportation Vehicles
- Americans with Disabilities Act (ADA) 28 CFR Part 36 Standards for Accessible Design, ADA Accessibility Guidelines for Buildings and Facilities, Rev. July 1, 1994
- 49 CFR Part 659: Rail Fixed Guideway Systems: State Safety Oversight

The above codes and standards would be referenced principally in the design of the various buildings (stations, maintenance facility, operations center) and infrastructure associated with the maglev system.

The "ASCE Automated People Mover Standard – Part 3 – ASCE 21-00", specifically addresses guideways, stations and electrical grounding and is a very useful standard for it considers not just a single element of a system (such as a guideway) but the system as a whole and how the various components of the system inter-relate. Looking at a maglev system from a systems approach, not as an assemblage of isolated parts, is vitally important in successfully implementing a maglev system in the United States.

4.2.4 Comparison of United States and Japanese Codes and Standards

Japan has its own set of codes and standards governing the design and construction of elevated guideways, elevated train systems and the buildings and infrastructure associated with such systems. In fact Japan has more elevated guideway train systems than the United States, so they

have considerable experience in addressing issues specific to the design of such systems. Considering its susceptibility to earthquake damage (Japan is located on the same tectonic plate as California), Japan's codes and standards from a civil, structural and building engineering design perspective can be considered equally as rigorous in intent and execution as the equivalent codes and standards that exist in the United States. That is one of the reasons why there will be no major difficulties in adapting the design of the guideway and civil works for the CHSST maglev system in the United States.

Chapter 2 compares existing Chubu HSST performance characteristics with performance requirements in the United States. The summary table within that chapter noted United States code and standard requirements, and included a column indicating whether a particular characteristic of the existing CHSST system complied or would comply with United States requirements, codes or standards. A review of the table with respect to the guideway indicates that the CHSST system either already does, or will comply with United States codes and standards.

4.3 STRUCTURAL DESIGN CRITERIA

4.3.1 Overview

On the assumption that an elevated guideway structure will be used wherever practicable, the design criteria discussed in this section are accordingly centered on elevated guideways and the various codes, standards and guidelines that are applicable to them. At-grade and tunnel sections may be required for specific alignments. In those instances design criteria would be established for those elements.

The most efficient form of construction for the guideway and its associated structures is anticipated to be pre-cast, prestressed concrete beams and cast-in-place pier caps, piers and foundations. This system was used at the Oe test track and will be used at the future Tobu-Kyuryo line in Nagoya, Japan. It is also felt that in the majority of cases, the use of pre-cast concrete beams will be the most cost effective solution for implementation of the system in the United States. One of the main reasons is that pre-cast concrete beams allow for a high degree of precision with regards to fabrication and construction, which is essential for the tight tolerances required for maglev systems. Consequently, the provisions of these design criteria are weighted towards reinforced and pre-cast, pre-stressed concrete.

4.3.2 Principal Reference Codes and Standards

As stated in Section 3.0 "Applicable United States Codes and Standards," the three principal reference documents used for the design of the guideway in the United States will be:

(i) AASHTO "Standard Specifications for Highway Bridges", 16th Edition, 1996

(ii) AASHTO "LRFD Bridge Design Specifications", 2nd Edition, 1999; and,

(iii) ACI 358.1R-92 "Analysis and Design of Reinforced and Pre-stressed Concrete Guideway Structures"

Guidelines and recommendations of the American Railway Engineering Association and the

Federal Highway Administration may also be used as references. It is important to note that each project is unique and requires the preparation of design criteria tailored specifically to the project, its geographical location, the alignment, availability of materials, and the site and other conditions prevalent for the project under consideration. Those design criteria should be prepared and implemented under the direction of Professional Engineers registered in the jurisdiction within which the project is located.

4.3.3 Design Life and Fatigue

Design Life: The design service life for the guideway and associated civil works, including stations and operations and maintenance facilities for a system constructed in the United States, shall be 75 years. This is consistent with the design service life given in ACI 358.1R and AASHTO Standard Specification for Highway Bridges, 16th Edition, 1996. It is also the design service life required in the FTA Low Speed Maglev Technology Development Program "General Requirements Document."

Fatigue: The structural design criteria for the Tobu-Kyuryo Line (TOBU-KYURYO) in Nagoya are based on Japanese Road and Bridge Design Criteria and Railroad Structure Design Criteria. These standards do not specify a definitive design service life for the guideway; rather they evaluate service life in terms of fatigue. The section of the standard on fatigue requires a 60-year life calculation.

While specifying a design service life of 75 years for the principal structural elements of the guideway (precast girders, pier caps, piers and foundations) is routine and not difficult for the implementation of the CHSST system in the United States, a question was raised as to the fatigue life of the sleeper / rail assembly that sits atop the guideway. A recent review of test data by the CHSST engineering staff identified three sets of fatigue testing that had been conducted on the sleeper / rail assembly.

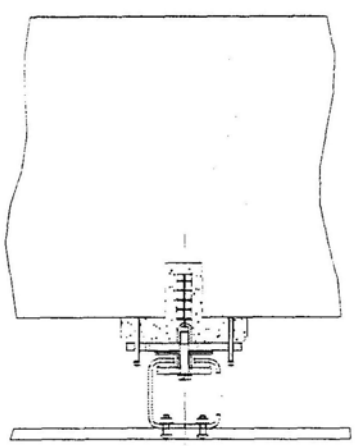

Two sets of testing were conducted in 1994: one by the prestressed concrete beam manufacturer and the other by the steel manufacturer. The steel manufacturer performed a further test in 2001. All three sets of testing were predicated on a vehicle load at "nominal" capacity and not at "maximum" capacity since that more closely reflected normal operating load conditions. A common test assembly was used for all three tests, consisting of two sleepers and two rails with a standard bolt fixation pattern. For reference, a typical rail/sleeper, sleeper/girder attachment detail is shown in **Figure 4-7**. In all three cases the assembly was subjected to 2 million loading cycles. Results of all three sets of tests were the same. CHSST reported there was no evidence of cracks or deformation and no change in the stress / deflection curve.

Figure 4-7 Rail / Sleeper / Girder Attachment Detail

Measurements of actual stresses in the rail / sleeper at nominal vehicle load capacity made during fatigue testing and other test were as follows:

Stress fluctuation of high-tension fixing bolt: 22 kgf / cm^2

Stress in Rail: 300 – 400 kgf / cm^2

Stress in Sleeper: 120 – 250 kgf / cm^2

Since these are relatively low stresses, CHSST is confident that the rail / sleeper assembly will remain durable, with no adverse effects from fatigue for the period of 60 years, which is required by Japanese design criteria. Accordingly, CHSST has made no changes to the sleeper / rail assembly design details for the system that is presently being constructed for the TOBU-KYURYO line in Nagoya. When implementing the CHSST system in the United States, further review of the fatigue life of the sleeper / rail and sleeper / girder assemblies would be recommended together with a review of corrosion control and adjustability of the system as it ages to maintain the rail alignment within the required tolerances.

Sleeper / Rail Materials: The materials used in the sleeper rail assembly both at the Oe test track and for the TOBU-KYURYO line are as follows:

Reaction Plate: Extruded Aluminum

Rail: SMA 400 AW Hot-Rolled Atmospheric Steel for Welded Structures

Sleeper: SS 400 Hot-Rolled Structural Steel

Bolts/Rail Fixing: High-Tension Bolts 16 mm in diameter

Bolts/Sleeper Anchor: Structural steel 20 mm in diameter

The issues of construction and alignment tolerances and corrosion protection are further discussed in Sections 4.4 and 4.7.4, respectively.

4.3.4 Reliability Index

The reliability index normally used for highway bridges in the United States is 3.5. Since the consequences of failure of a transit guideway would potentially be greater for a transit guideway, it is proposed that for United States applications a reliability factor of 4.0 be used, which corresponds with the models presented in ACI 358-1R

4.3.5 CHSST Structural Design Criteria

The key factor in developing the design is to have a clear understanding of the loads and forces that the CHSST-100L vehicles / train consists impart to the guideway and the construction tolerances to which the rail, sleeper and guideway girders and columns must be constructed. CHSST has published a document titled “Peculiar Condition for Guideway Design,” which has been adapted into a document titled “Structural Design Criteria for CHSST-100L Vehicle” by members of the MUSA team. This document describes the design criteria, loads, allowable displacements and load combinations recommended by CHSST for its system in Japan. Implementation of the CHSST system in the United States will require careful assimilation of the

system-specific CHSST design requirements with the requirements of United States codes and standards which require some adjustments to design load combinations and safety factors. Also wind loads, earthquake loads, other loads and geotechnical conditions which vary according to location, would all need to be specifically reviewed for the site in the United States where the system would be located. A copy of the "Structural Design Criteria for CHSST-100L Vehicle" is attached for reference in **Appendix A**.

4.3.6 Structural Design Criteria for United States Applications

This section examines structural design criteria that should be considered in the United States for the CHSST 100L guideway and civil works. Again, it is important to emphasize that development of design criteria be site specific and based on construction materials readily available in that area. For this section it has been assumed that the guideway beam be precast concrete; and the pier caps, piers and foundations be cast-in-place concrete. Some other structural elements, such as switch support structures and other superstructure and substructure elements would be fabricated in structural steel.

Material Properties - Concrete:

(i) Compressive Strength: In general, the minimum 28-day compressive strength of concrete f'_c shall be as follows:

Precast concrete components	6,000 psi
Cast-in-place components	5,000 psi
Piles	3,000 psi

(ii) Modulus of Elasticity: Initial modulus of elasticity of concrete shall be calculated using the following equation:

$$E_c = 57{,}000\ (f_c)^{1/2} \qquad \text{Where } E_c \text{ and } f_c \text{ are in psi.}$$

(iii) Creep Coefficients: The final creep coefficient and the shrinkage coefficient would be based on a concrete age of 75 years, and would be calculated in accordance with the requirements of the CEB- FIP Model Code 90.

(i) Coefficient of Thermal Expansion: The coefficient of thermal expansion a_{Tc} shall be 0.0000065 inches per inch per degree Fahrenheit

Material Properties – Reinforcing Steel:

(i) Yield Strength: Yield strength would be in accordance with AASHTO Specification M31 Grade 60

(ii) Modulus of Elasticity: Modulus of elasticity shall be 29,000 ksi

(iii) Surface Characteristics: Bars shall be deformed in accordance with ASTM Standard A615 and shall be uncoated

(iv) Coefficient of Thermal Expansion: The coefficient of thermal expansion a_{Tc} shall be 0.0000065 inches per inch per degree Fahrenheit

Material Properties – Pre-stressing Steel:

(i) Basic Characteristics: Pre-stressing steel would be selected specifically for the project but would typically be multi-wire low-relaxation strands in accordance with AASHTO Specification M203 Grade 270

(ii) Tensile Properties: Minimum ultimate tensile strength to be 270 ksi. Design value of yield strength of strands to be 0.9 x ultimate = 243 ksi

(iii) Modulus of Elasticity: the modulus of elasticity would be 28,000 ksi

(iv) Coefficient of Thermal Expansion: The coefficient of thermal expansion a_{Tc} shall be 0.0000065 inches per inch per degree Fahrenheit

Material Properties – Structural Steel:

(i) Structural Steel: Structural steel shall be in accordance with AASHTO Specification M270 Grade 50 with a design yield strength of 50 ksi

(ii) Modulus of Elasticity: Modulus of elasticity to be 29,000 ksi

(iii) Bolts: Bolts to be in accordance with AASHTO Specification M164 (diameter to be determined: typically 7/8 –inch). Bolted connections shall be friction-type connections

(iv) Surface Treatment: In general all exposed structural steel shall be hot dip galvanized after fabrication.

Ultimate Limit State Design: In general, the structural components of the guideway and associated civil works shall be designed with respect to the ultimate limit state, (i.e. by ensuring that ultimate capacity of a given structural component is greater than the ultimate demand). Separate checks would also be carried out to confirm that behavior is adequate under service conditions, and that limiting values for deflections, vibrations, cracking and other conditions related to serviceability are not exceeded.

Loads: In general, the loads identified by CHSST in **Appendix A** "Structural Design Criteria for CHSST-100L Vehicle" would be used for analysis of loads in the United States. There are some exceptions or adjustments that would likely be made. They are as follows:

(i) Wind Load: Two levels of wind load would be considered. The extreme wind load would be applied to the net exposed area of the structure only. Maximum service wind load would be applied to the exposed net area of the structure and vehicle. It is assumed that adequate warning would be provided of extreme wind load (hurricane force) and that the trains would be removed to shelter before the extreme wind load is applied.

The extreme wind load would be based on clauses 3.3.2.1 and 3.3.2.2 of ACI 358.1R-92, which are consistent with the values given in AASHTO Standard Specifications for Highway Bridges derived from wind speeds of 100 mph.

The maximum service wind load would correspond to 30 percent of the design pressures extreme wind load. This is consistent with the AASHTO Standard Specifications for Highway Bridges. It is also consistent with the FTA "General Requirements Document" which refers to a document titled "Technical Assessment of Maglev System Concepts, Special Chapter 98-12", which identifies a structural threshold of 100 mph (160 kph) and a ride comfort threshold of up to 50 mph (80 kph).

(ii) Earthquake Load: Earthquake loads are site specific and would be based on AASHTO Standard Specifications for Highway Bridges, Division 1-A, Seismic Design. The single-mode spectral method would be used. Parameters governing analysis and design include: acceleration coefficient, seismic performance category, and soil profile type.

Structural Analysis: In general, elastic methods would be used to calculate forces due to loads. Forces due to imposed deformations may be calculated, where appropriate, considering the decrease in structural stiffness due to creep, cracking, or other causes. Displacements due to short-term actions would be calculated using elastic methods based on the initial modulus of elasticity and the moment of inertia of the cracked section. Displacements due to long-term actions would be calculated with consideration of the effects of creep and strain.

Load Combinations: Analysis of "service" load combinations would be based on Clauses 4.3 and 4.4 of ACI 358.1R-92. Analysis of "ultimate" load combinations would be based on Table 4.4 of ACI 358.1R-92.

Design Requirements for Pre-stressed Concrete Components: Allowable stress limits in the "pre-stressed concrete" shall be based on Clause 5.3.2.1 of ACI 358.1R. Allowable stress limits in the "pre-stressing steel" shall be based on Clause 5.3.2.2 of ACI 358.1R-92. It is assumed that pre-stressing steel would consist of low-relaxation strands. Limiting deflections would be derived from **Appendix A,** "Structural Design Criteria for CHSST-100L Vehicle". Strength resistance factors for pre-stressed concrete components would be taken from ACI 358.1R-92. Ultimate resistance of pre-stressed components shall be calculated in accordance with AASHTO Standard Specifications for Highway Bridges.

Design Requirements for Reinforced Concrete Components: Behavior of reinforced concrete components under service loads shall be in accordance with Clause 8.16.8 of the AASHTO Standard Specifications for Highway Bridges. Strength resistance factors for reinforced concrete components would be taken from ACI 358.1R-92. Ultimate resistance of reinforced components shall be calculated in accordance with AASHTO Standard Specifications for Highway Bridges.

Design Requirements for Structural Steel Components: Design of structural steel components shall be in accordance with Chapter 10 of the AASHTO Standard Specifications for Highway Bridges, Service Load Design Method.

4.3.7 Summary

The most efficient form of construction for the guideway and its associated structures is anticipated to be pre-cast, prestressed concrete beams / girders and cast-in-place pier caps, piers and foundations. This structural system has been used by CHSST at the Oe test track and will be used at the future Tobu-Kyuryo Line in Nagoya. Although there are distinct differences in the design methods and standards used in Japan and the United States, the overall end result is structures that are very similar in terms of structural depth, width and reinforcing. It is felt that some efficiencies in design and construction methods may result in slightly lighter structures in the United States. However, the structural design in terms of depth and width of beams is most influenced by the loads imposed upon the structural system and the allowable deflections in the girder and the rail / sleeper assembly that are required to meet the alignment tolerances and requirements of the CHSST system.

Reducing the weight of the vehicle would generally be expected to result in lighter guideway structures, including precast girders, pier caps, piers and foundations. Many load combinations are considered in the design of a guideway but as a general rule, structural depth and width of precast girders relate directly to vehicle weight. The slimmer the cross section of the girder, the guideway will be less expensive as a whole.

Another contributor to dead load on the CHSST system is the rail / sleeper assembly. The rail / sleeper assembly, while providing a simple method of adjusting alignment tolerances during construction and in later years during service maintenance, it adds to the dead load of the guideway structure. In Section 4.8 of this chapter, the alternative of direct fixation of the rail will be discussed. It is felt that successful implementation of this alternative would not only reduce dead load and potentially structural depth, but improve aesthetics also.

4.4 ALIGNMENT AND CONSTRUCTION TOLERANCES

4.4.1 Overview

The use of maglev trains in an urban environment requires that they be capable of turning through tight horizontal and vertical curves in order to negotiate the tight right-of-way constraints prevalent in a city. Passenger comfort criteria related to jerk rates dictate that tight turns, even with super elevation, be negotiated at very slow speeds. Competing against this requirement is that maglev trains need to provide quick and comfortable service along the route. Alignments and vehicle performance criteria therefore need to be carefully selected to achieve an optimum level of service. This section compares the curve and grade characteristics of the current generation of the CHSST vehicles with those contained within the FTA Low Speed Maglev Technology Development Program "General Requirements Document." It describes the factors that influence the turning capabilities and discusses what level of performance could be achieved with the current vehicles before extensive re-engineering is required.

4.4.2 Comparison of Current CHSST System Capabilities with FTA Requirements

Contained within the FTA "General Requirements Document" is a set of criteria regarding the desired grade and horizontal and vertical curve capabilities of a United States Urban Maglev Vehicle. The CHSST system presently being designed for the Tobu-Kyuryo Line (TOBU-KYURYO) in Nagoya (which is based on the CHSST-100L vehicle) has its own set of grade and

curve capabilities that are a function of the vehicle length and module design. CHSST has another model available, the 100S, which is shorter and can negotiate tighter turns where the alignment so dictates. The 100S shares the same design and components as the 100L; the only substantive difference is that since it is shorter, it has less capacity per square foot than the 100L. The selection of which vehicle to use is therefore alignment driven. Outlined below is a comparison of The Chubu-HSST's two vehicles with the FTA General Requirements.

Grade	FTA Requirement	CHSST-100L	CHSST-100S
Maximum for 460 m	10%	7%	7%
Operating capability	7%	7%	7%

CHSST has stated that although its published grade capabilities are 7%, it is confident that a grade of 10% can be attained without any significant redesign of the present components.

Horizontal Curve Radius	FTA Requirement	CHSST-100L	CHSST-100S
Main line – normal operations	18.3m	75m	50m
Sideline track – maintenance	18.3m	50m	25m

The CHSST 100L vehicle can negotiate 50 m turns but at a very low speed. If an alignment demands a horizontal curve radius less than 50 m then the 100S vehicle could be utilized. It should be noted however, that speed through such tight curves would be very slow even with super elevation due to the ride quality requirements of lateral g-force in a vehicle being less than 0.075g. For the TOBU-KYURYO the 100L was selected because the alignment did not contain any horizontal curves less than 75 m. At that radius and with no super elevation, it is expected that the vehicle will travel through the 75 m radius curve at approximately 30 kph, a reasonable speed considering the tight curvature.

Vertical Curve Radius	FTA Requirement	CHSST-100L	CHSST-100S
Crest Curvature	1,000 m	1,500 m	1,000 m
Sag Curvature	1,000 m	1,500 m	1,000 m

Although The Chubu-HSST's published minimal crest and sag curvature is 1,500 m, the Oe test track includes a section of track with 1,000 m crest and sag curves. When the FTA / MUSA team visited the test track in March 2002, the 100L vehicle seemed to have no trouble negotiating the vertical crest and sag curves at the speeds of up to 90 kph that were run that day. Clearances with a 1,000 m sag or crest curve would become an issue however, if the maximum speed of the vehicle is increased from 100 kph to 130 kph, but in that case it is expected the vertical curve radii would be increased to compensate to the design radius of 1,500 m.

4.4.3 Limiting Factors to Curve Radii

Factors that limit the minimum horizontal curve radius include the lateral module linkages associated with vehicle length, the clearances between the mechanical brakes and the rail, and the construction tolerances to which the reaction rails are installed and maintained. Factors that limit the vertical curve radii include the vehicle length, the LIM module length, and the speed at which the train travels through the curve.

Although the current planned operating speed of the 100L is 100 kph, and that is the maximum speed that will be run along the TOBU-KYURYO, the CHSST design team feels confident that the 100L vehicle could run at speeds of up to 130 kph without any significant redesign. Should a speed of 160 kph be required however, significant redesign of several of the vehicle and guideway components would be necessary.

Irrespective of maximum speed or acceleration capabilities, the speed of the train through a curve is really a function of geometry, involving: (i) clearance between the LIM module, braking components and the rail and (ii) the tolerance of passengers to sharp turns (0.075G) even with the effects of super elevation.

4.4.4 Vehicle Selection

CHSST has two vehicles available to meet the needs of the urban alignments it plans to serve in Japan. By keeping the minimum horizontal curve radius to 75 m along the TOBU-KYURYO, CHSST was able to take advantage of the greater length of the 100L train to optimize capacity. Should there be a need for a curve radius of 25 m for a particular alignment in the United States, the 100S vehicle, which shares the same components as the 100L, but in a shorter train length, would be a suitable candidate.

4.4.5 Track Construction Tolerances

In addition to the limitations on curve radii imposed by the clearance between vehicle-borne components and the track, the other major important factor is the tolerances to which the guidance rail components must be manufactured, installed and maintained. Through mathematical analysis and many years of empirical testing at the Oe test track, the CHSST design team has established the precision requirements for rail installation for both the 100L and 100S train systems. **Appendix B**, titled "Alignment Criteria for CHSST-100L System" was adapted from a CHSST document titled "Peculiar Conditions for Guideway Alignment." In addition to setting forth the design criteria for horizontal curves, gradient and distance between dual guideways, the document also includes a table that defines the precision requirements for rail installation. Those requirements are reproduced in the table below and illustrated graphically in **Figure 4-8**.

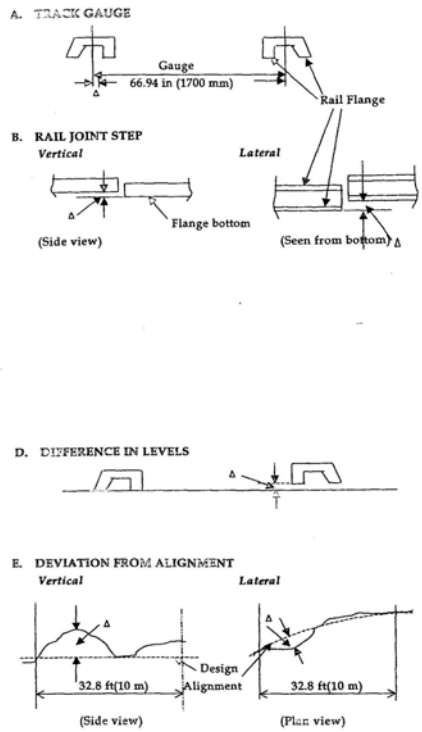

Figure 4-8 Precision Requirements for Rail Installation

Table 4-1 Precision Requirements for Rail Installation

	Item	Construction Allowance	Limit	Remarks
A	Track Gauge	3 mm (0.12 in)	5 mm (0.2 in)	Distance between Rail Centers
B	Rail Joint Step	1 mm (0.04 in)	1 mm (0.04 in)	Both Vertical and Lateral Step
D	Difference In Level	3 mm (0.12 in)	5 mm (0.2 in)	Difference between Rail Levels
E	Deviation from Alignment	3 mm (0.12 in)	5 mm (0.2 in)	Lateral and Vertical Deviation from Alignment Every 10 m (32.8 ft) long

These all appear to be very tight tolerances and involve many man-hours of work during initial construction and installation. In reviewing the condition of the sleeper / rail system at the Oe test track, there were indications through visual assessment that there were sections along the test track where it appeared that the precision requirements listed above have not been maintained. Although those observations were entirely subjective without measurements, there was no noticeable degradation in ride quality at any section of the track when the train was running at speeds of up to 90 kph during the demonstration visit to Japan in March 2002. For future studies it is recommended that actual measurements of the four installation tolerances be taken at several locations along the track to verify whether there is an opportunity to relax the tight precision requirements based on operational performance history.

4.4.6 Precision Requirements for Trolley Rail Installation

Another item requiring a high degree of precision during installation is the trolley rails. Two lines of ALSUS (Aluminum/Stainless Steel) rigid trolley rails will be installed on either side of the guideway girders. The 1500V DC traction power is supplied from the DC substation through the trolley rails to the vehicle through power collectors attached to the modules underneath the vehicles. **Figure 4-9** shows the general arrangement of the trolley rails on the guideway girder and shows the two measurements A and B that are mentioned in the precision requirements table below:

Table 4- 1 Precision Requirements for Trolley Rail Installation

Item	Design	Required for Installation	Allowable Construction	Remarks
"A" in Fig. 4-10	3.54 in (90 mm)	+/- 0.2 in (5 mm)	+/- 0.4 in (10 mm)	
"B" in Fig. 4-10	24.4 +/- 0.71 in. (620 +/- 18 mm)	+/- 0.2 in (5 mm)	+/- 0.4 in (10 mm)	Varies by snaking

Note: B varies between 23.5 – 24.9 in (597 – 633 mm) by trolley rail snaking of 1.4 in (36 mm) movement per every 656 ft/200 m (mid point 24.4 in/620 mm).

These are stringent requirements, but quite straightforward to obtain and maintain due to the ease of adjustment up and down and rotationally through the slots provided at the trolley / girder connector plates.

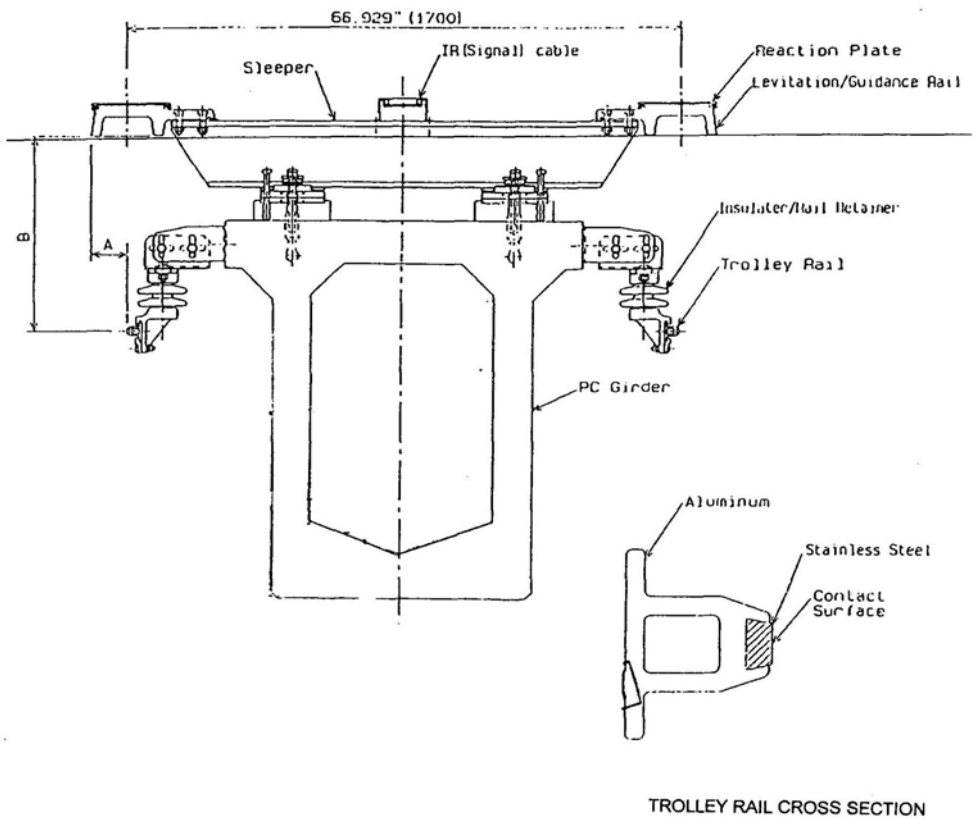

Figure 4-9 Precision Requirements for Trolley Rail

4.4.7 Summary

The FTA requires that maglev vehicles be able to negotiate very tight turns in order to be adaptable to tight right-of-way constraints within city environments. CHSST has two vehicles, the 100L and 100S, which are similar in design but serve different needs. For longer systems with not so quite stringent horizontal and vertical curvature constraints (minimum horizontal curvature capability of 50 m), the 100L is most suitable since it has a greater carrying capacity on a per square meter basis than the 100S model. For alignments where very tight curvatures are required, the 100S would be more suitable by virtue of its minimum horizontal curvature capability of 25 m. As a cautionary note however, due to the sensitivity and tolerance of passengers to turning forces, the speed at which the trains would travel through the minimum curvatures would be very slow. To take advantage of the speed and acceleration capabilities of maglev trains it is recommended that any alignment be very carefully designed to maximize curve radii and let the trains run as fast and efficiently as possible.

Review of the precision requirements published by CHSST for the installation of the reaction rail and trolley rail, indicates that very tight tolerances need to be met. Tight tolerances generally

translate to high construction costs due to the number of man-hours needed to install the key elements of the sleeper and rail system. There have been some visual observations that indicate that installation tolerances may not need to be as tight as those specified by CHSST. It is therefore recommended that tolerances be measured in the field to determine if there is any opportunity to relax the stringency and thereby potentially reduce costs.

4.5 STATION DESIGN

4.5.1 Overview

Stations are a very important element of any train system design and a maglev system is no exception. Proper station design is critical to the efficient movement of people through the system at the capacities envisioned for the life of the system. Station size, platform length, traffic circulation, and configuration are all project specific, and driven by the capacity analyses and service levels calculated at the beginning of any project. This section of the chapter will review the key design criteria and considerations that influence the design of a station and present some station concepts that would be suitable for stations serving the needs of low speed maglev systems located in urban environments. In keeping with the goal of developing cost effective maglev systems, the station concepts offered are for simple structures that are constructed with economical materials yet provide a safe, accessible, welcoming and comfortable facility for passengers.

4.5.2 Codes and Standards

Although there are many codes and standards applicable to the design of train stations, some of the most important ones in terms of facility design are as follows:

- BOCA National Building Code
- State and City Building Codes (Which will cover supplemental requirements of individual states, cities and jurisdictions).
- NFPA 130 “Standard for Fixed Guideway Transit and Passenger Rail Systems, 2000 Edition
- ASCE Automated People Mover Standard – Part 3 – ASCE 21-00 (Which specifically covers stations for APM systems)
- OSHA – U.S. Department of Labor, Occupational Safety and Health Administration
- Americans with Disabilities Act (ADA) 28 CFR Part 36 “Standards for Accessible Design, ADA Accessibility Guidelines for Buildings and Facilities”, Rev. July 1, 1994.

4.5.3 Americans with Disabilities Act

Of the above codes and standards, the Americans with Disabilities Act (ADA) most strongly influence the space planning and circulation of people within stations. Specifically, the criterion of ADA required that as of January 26, 1993, all new stations must be built to be accessible. The

station planning and design would embrace the intent of the ADA to the maximum extent possible. Specific provisions of the ADA that are applicable to station design include:

(i) Stations and Facilities

- Circulation Paths
- Stairs, Ramps, Elevators, Escalators
- Platform and Floor Finishes
- Public Address Systems (for vision impaired visitors)
- Signage (for hearing impaired visitors)
- Emergency Alarms
- Informational Areas
- Telephones (optional) (text TDD type)

(ii) Waiting and Boarding

- Accessible Route
- Wheelchair Locations
- Information Systems
- Platform Edge Warning
- Gap distance between Car and Platform
- Platform Edge to Vehicle Floor Vertical Clearance

(iii) Site and Entrance

- Station Visibility
- Signage
- Approach
- Ramps
- Surfaces
- Lighting

4.5.4 Station Planning Considerations

In order to meet the economic goal of minimizing system costs, station structures should be kept to a minimum while accomplishing the necessities of weather protection, efficient circulation, accessibility, patron safety, visitor information and system security. From an intermodal perspective, stations should be designed to connect well to other modes of transport including adjacent train stations, parking for cars and unloading facilities for buses and taxis. From a community perspective, the stations should be designed to blend in well with the surrounding urban environment. In summary, the following objectives will be aspired to:

- Passenger Service
  Facilitate access and orientation
  Ensure safety and security
  Provide barrier free access
  Minimize crowding and congestion

- Environmental
  Provide a comfortable environment in terms of space, light, acoustics and security

Provide adequate weather protection
Provide for convenience

- Economics
  Minimize total costs consistent with value required
  Utilize energy efficiently
  Minimize operational costs, maintenance and cleaning
  Consider the consequences of growth and expansion

4.5.5 Platform Design

In most urban maglev system applications, it is likely that a dual guideway configuration will be used, since a dual guideway reduces the number of switches and imposes the fewest restraints to multi-train flow through the system. For this reason this section focuses on station types for dual guideways. There are basically two platform configurations for dual guideway stations: center island platform as shown in **Figure 4-10** and side platforms as shown in **Figure 4-11**. Platform dimensions are a function of vehicle length and passenger capacity. Vehicle length will be project specific and depend on the operating characteristics of the system under consideration. The Tobu-Kyuryo Line (TOBU-KYURYO) in Nagoya for instance uses three-car trains. This translates to a platform length of approximately 45 m (148 ft). Platform width is estimated to be 3.7 m (12 ft) for each side platform, and 6.7 m (22 ft) for a center island platform.

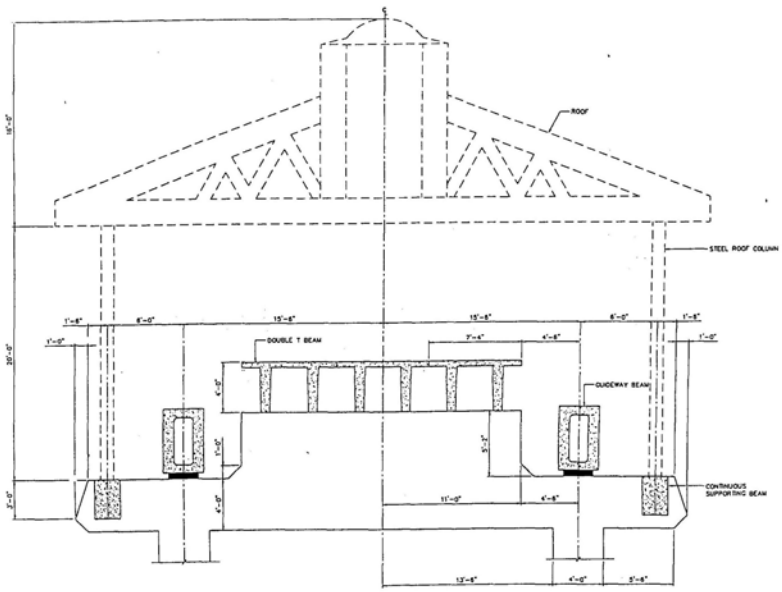

Figure 4-10 Center Island Platform

It is envisaged that the platform substructure be constructed in reinforced concrete, and the platforms formed by double-tee precast beams. The platform surfaces would therefore be smooth finish concrete and would be protected with a sealer. The center platform would be crowned to provide a positive slope to the trackway. Side platforms would also be sloped toward the trackway. Tactile surfaces would be of a size, texture, finish and color to comply with the recommended accessibility requirements. An appropriate number of simple benches would be provided at the platform level for patron comfort while waiting. The platforms would be covered

with canopy roofs to provide weather protection. However, the environment in which the station is located will influence the degree of weather protection provided.

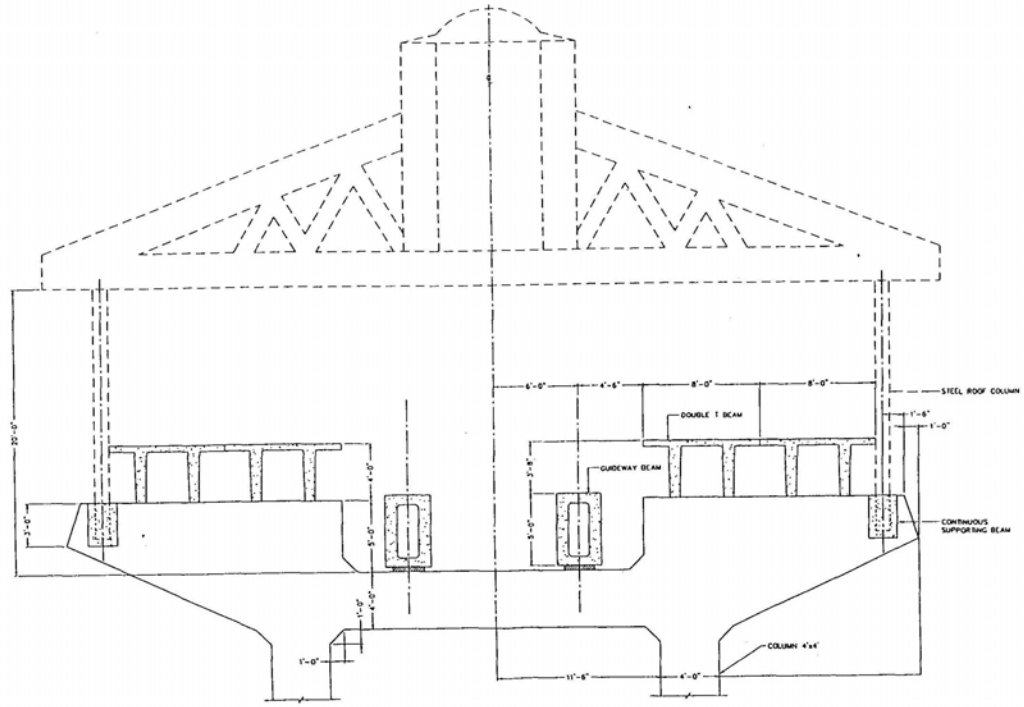

Figure 4-11 Side Platform Station

4.5.6 Circulation

A key requirement in any station design is efficient circulation of people through the station. Circulation should be simple and direct, avoiding unnecessary and disorienting turns, excessive travel lengths, cross-flows and dead-ends. Visitors of all abilities should use space outside the mainstream of patron flow for slow passage, and right-hand flow should be provided wherever possible. Equipment and furnishings should not be located within main pathways and queuing spaces should be created where necessary.

4.5.7 Materials and Finishes

The selection of materials and finishes will pay close attention to safety, durability and maintainability. Fire resistive materials with low flammability and smoke generation characteristics would be selected. From a durability standpoint the materials should resist excessive usage and harsh weather conditions while remaining attractive. The materials should also be cleanable in a single operation with standard equipment. Careful selection of materials is not only important from an up-front capital cost, but is equally important when considering the ongoing operating costs of the system. The following lists of materials are representative of the quality of finishes that would be suitable for use within the stations:

(i) Floors
- Concrete topping – smooth finish – sealed
- Cement terrazzo
- Tactile warning strips – fired clay products, masonry, granite

(ii) Walls
- Concrete unit masonry – scored, ribbed, split-face
- Granite – natural stone
- Stainless steel panels

(iii) Ceilings
- Metal panel systems – perforated for acoustical properties
- Suspended acoustical ceilings in interior spaces

(iv) Fascia Systems
- Exterior insulation and finish systems (EIFS)

(v) Roofs
- Sloped - Standing seam metal panels with concealed fasteners
- Flat – Modified bitumen membrane system

(vi) Support Systems
- Tubular steel – Kynar coated

4.5.8 Conceptual Designs

Figures 4-12, 4-13, 4-14, and 4-15 show ideas and conceptual station designs that have been developed by the MUSA team:

Figure 4-12 shows two exterior elevations of a side platform station. There are two levels: the station entrance level and a platform level. Exterior materials used are an EIFS wall system, standard glazing and standing seam roofing.

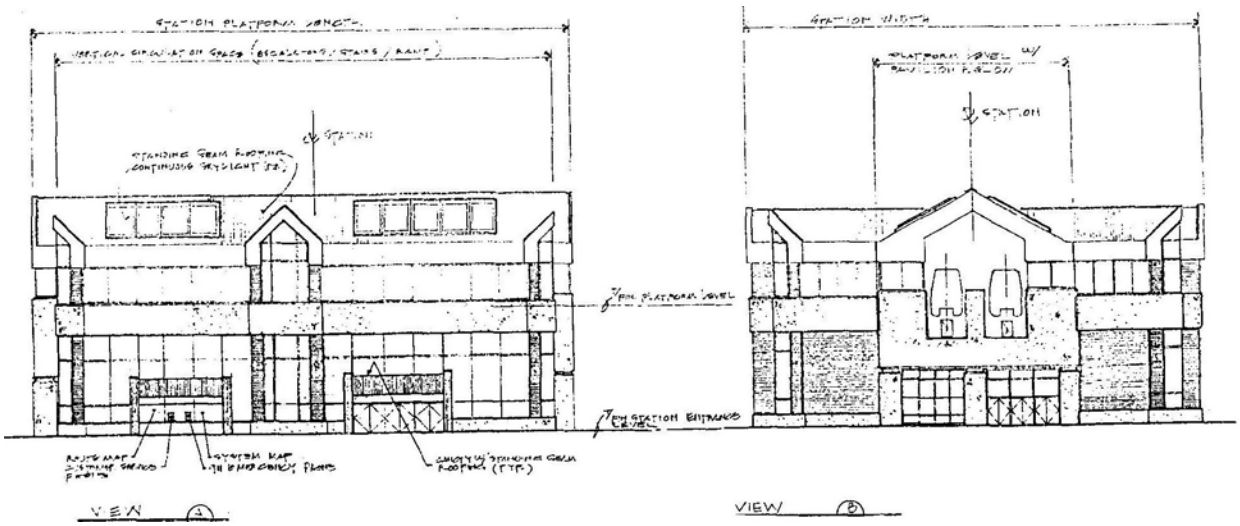

Figure 4-12 Conceptual – Exterior Elevations (Views "A" and "B" on Type 1 Station Concept in Figure 4-15)

Figure 4-13 shows floor plans for both the ground level station entrance and the upper platform level. Departing passengers arrive in the center of the station and move left or right depending on their direction of travel. Vertical circulation is provided at each side of the station by stairs, ramps, and elevators. Escalators could be provided but at considerable cost.

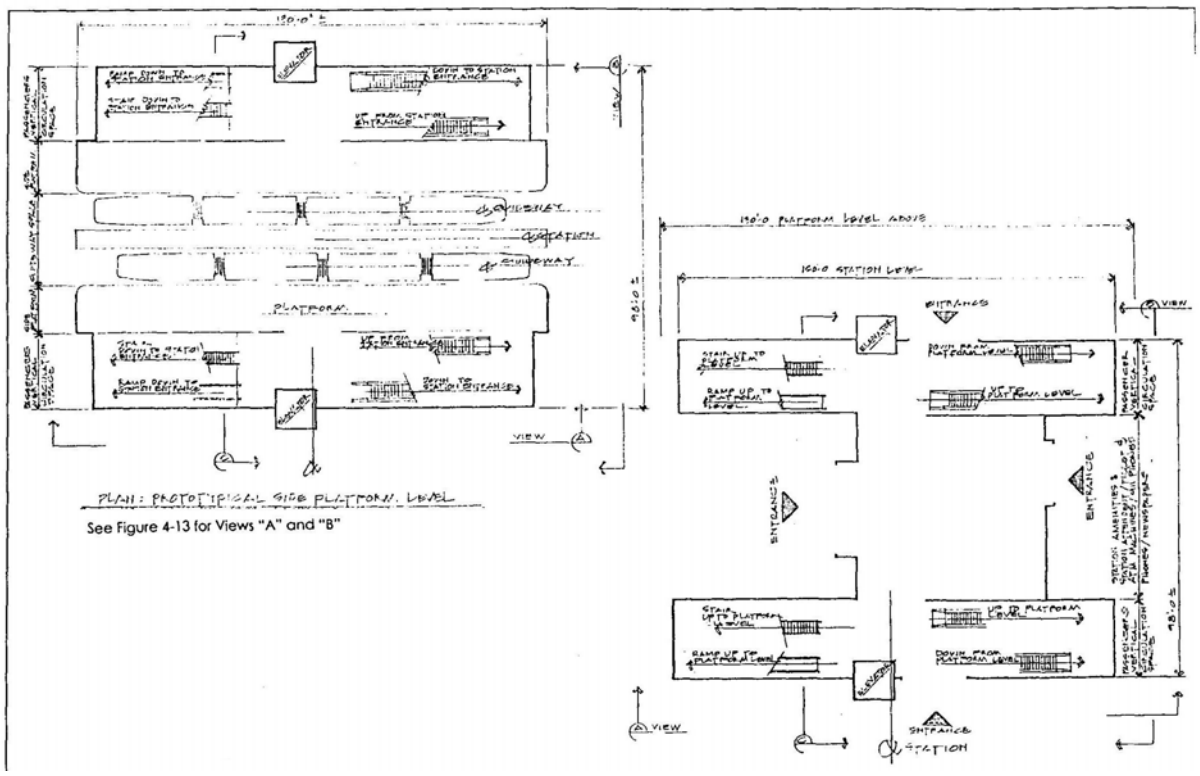

Figure 4 - 13 Conceptual Design – Floor Plans Plan Prototypical Station Entrance (See Figure 4-15 for Section "C")

Figure 4-14 shows typical amenities provided in the courtyard of the station level and a roof plan. Skylights are provided to let in natural light.

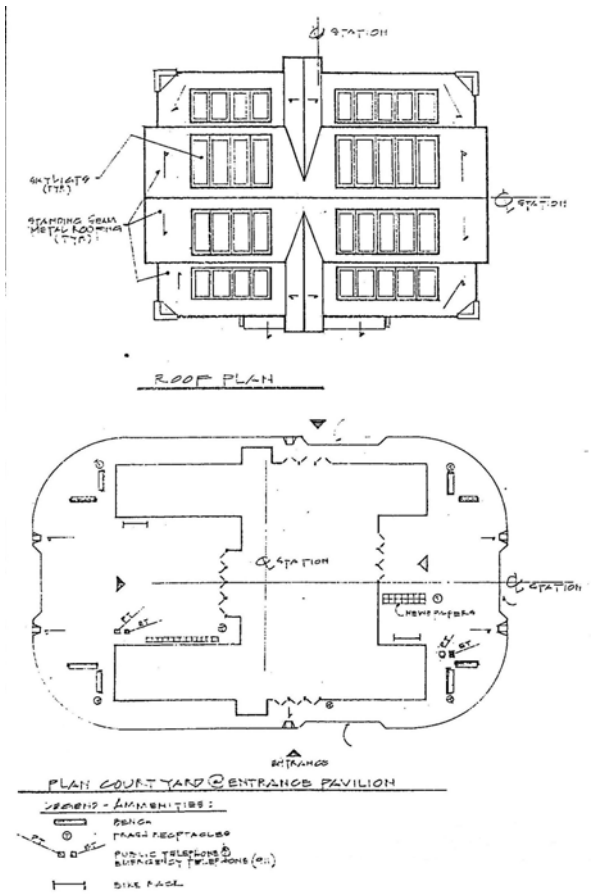

Figure 4-14 Conceptual Design – Courtyard and Roof Plan

Figure 4-15 shows three cross-sections that illustrate different roofing designs that could be used. Each use space frame structures standing seam roofing and skylights.

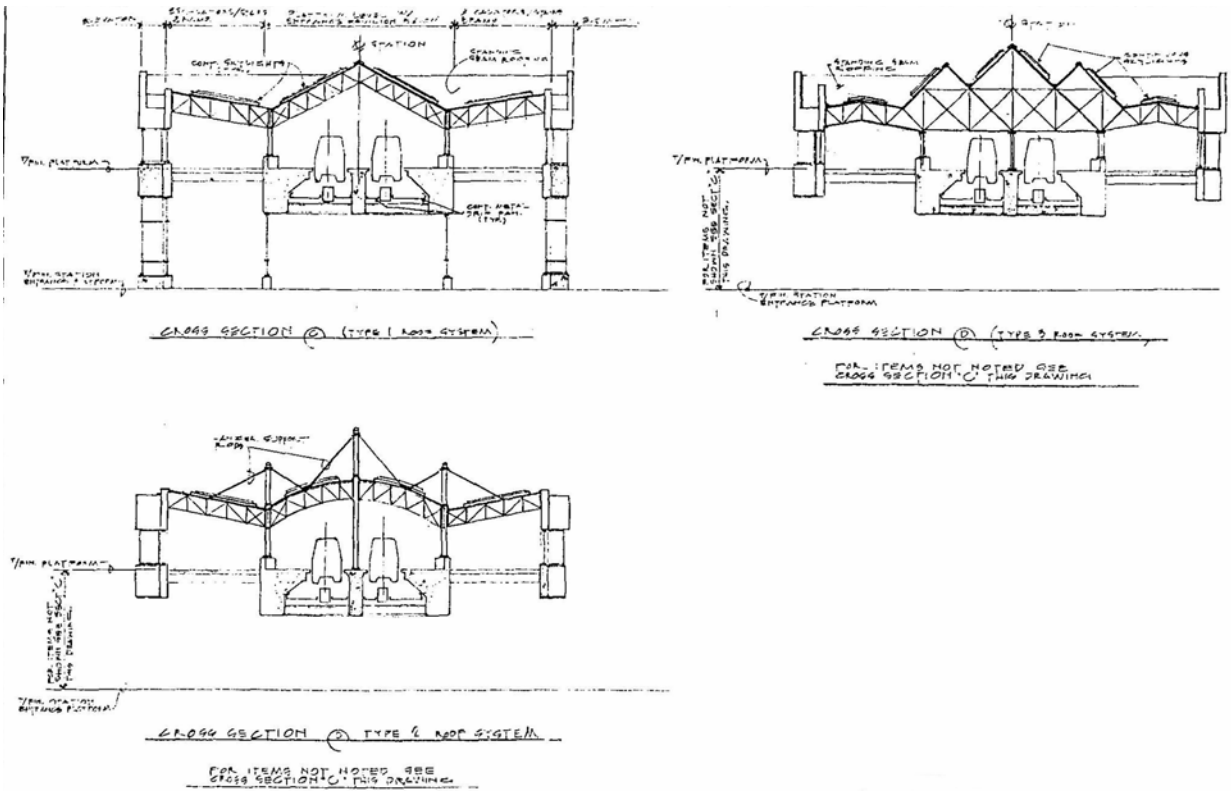

Figure 4 - 15 Conceptual Design – Alternative Roof Types

4.5.9 Summary

The client's needs and the environment typically drive the design of a station where it is located. The goal is to build stations that are user friendly, provide good accessibility for all persons wishing to use the system, fit in with the urban environment within which they are located, and economically priced. This goal is achievable by intelligent design and the use of simple structures and affordable materials.

4.6 SWITCH DESIGN

4.6.1 CHSST Switch Design

The segmented switch that has been designed by CHSST for use on the Tobu-Kyuryo Line is the same basic design as the switch that has been in place at the test track in Oe, Nagoya for the past ten years. The switch consists of three straight segments of unequal lengths that are swung into place by electric actuators. The segmented track allows the beam to go from a straight position to a curved one. Segmented switches are the most commonly used type of monorail switch in Japan. A schematic plan and side view of the CHSST segmented switch is shown in **Figure 4-16**.

The CHSST segmented switch currently in place at Oe is made up of a series of fabricated steel

girders that are pushed through an angle of 6.9 degrees by actuators powered by an 7.5 kW electric drive motor. The total weight of the switch is approximately 110,000 lbs and is supported on a reinforced concrete

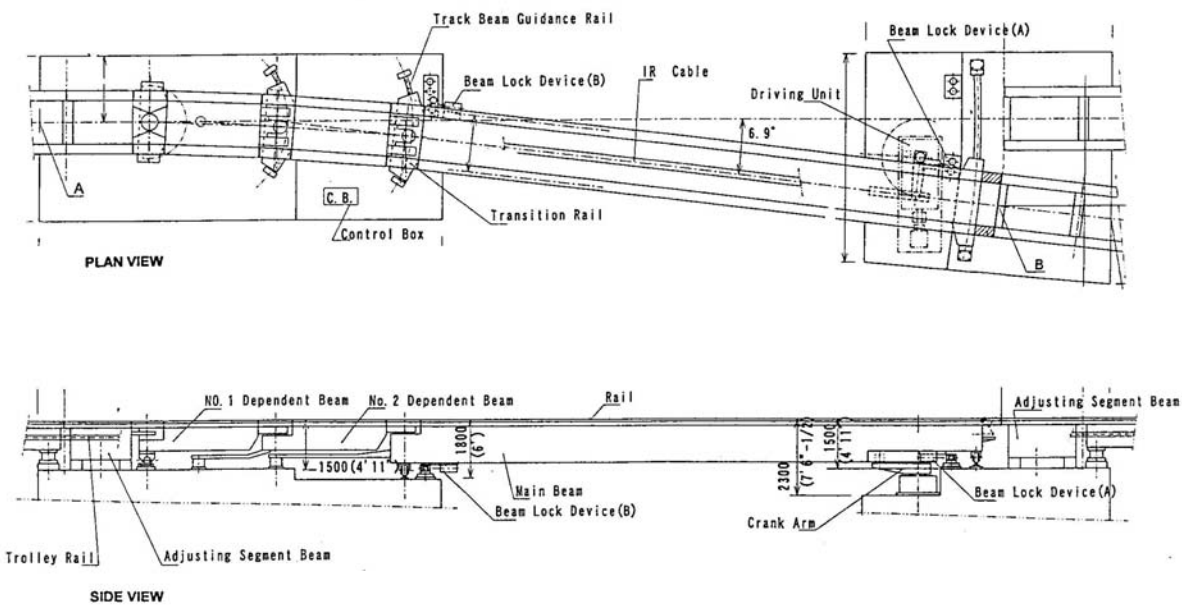

Figure 4-16 Switch at Oe Test Track

substructure. The overall dimensions of the switch, excluding supporting concrete structure, are approximately 30 m (100 ft) long; 4.9 m (16 ft) wide; and 18 m (5.8 ft) deep.

The switch requires 15 seconds to move through its cycle. Once through its cycle, the switch girder is held in place by a locking device, which is powered by its own 6 kW motor. The girder-locking device and the rail-locking device are required to keep the two sections of track aligned in accordance with the alignment criteria.

In the event of an electrical failure, the switch can be operated manually from the control box located adjacent to the switch. The location of the control box is shown on the plan view of **Figure 4-16**. It takes approximately 20 minutes to move the switch through its cycle manually. The configuration and some details of the switch are shown in the attached photographs:

Photo 4-3 Shows the switch aligned along the main line. The segmented sections are clearly visible.
Photo 4-4 Shows the girder and rail on the turnout side of the switch. The pivot and alignment mechanisms are evident in the foreground.
Photo 4-5 Shows a side view of the joint of the two rails at the switch.
Photo 4-6 Shows the joint of the rails at the switch from above.

Photo 4-3 Switch Aligned Main Line

Photo 4-4 Switch Aligned at Turnout

Photo 4-5 Rail Joint at Switch (Side View)

Photo 4-6 Rail Joint at Switch (Top View)

4.6.1.1 Switch Operation Sequence

Under normal operating conditions the switch is controlled remotely and automatically by a command through the signaling system. The sequence of operations of the switch is outlined below.

1) *Switching Command*: The switch operating procedure is started by a switching command from the Operations Control Center.

2) *Unlock Main Beam Lock Device A and B*: The main beam lock device A and B (see locations in **Figure 4-16**) are simultaneously unlocked by the switching command. The main beam lock devices are driven by the main beam lock electrical actuator installed on each main beam lock device, and are stopped by the main beam lock position limit switch.

3) *Move the Main Beam*: The main beam is moved to the desired position by the rotation of the main beam driving unit crank arm with the unlock signal from the main beam lock device A and B position limit switch and the open signal from the flapping rail position limit switch. The main beam driving unit is driven by the main beam drive electrical motor, and the rotation of the output shaft is monitored and stopped at the desired position limit switch synchronized with the shaft rotation.

4) *Lock the Main Beam Lock Devices A and B*: The main beam lock devices A and B are locked by the position signal from the main beam position limit switch. The lock

actuators are stopped by the lock position signal from the lock devices A and B position limit switch.

5) *Complete the Switch Operation*: After the main beam lock devices A and B have locked, the flapping rail has locked, and the main beam has stopped moving, a completion signal is forwarded to the Operations Control Center.

Steps 1 through 5, switching command to complete switch operation, take about 15 seconds.

4.6.1.2 Crossover / Scissors Switch

CHSST has developed a variation of the single segmented switch that allows a vehicle to transit from one side of a dual guideway to another. It is a crossover / scissors type switch and is illustrated schematically in **Figure 4-17**. The switch still relies on the principle of three straight sections of rail of unequal length being able to be articulated into a curved shape. The main line switch layout for the TOBU-KYURYO is shown in **Figure 4-18**. The Tobu-Kyuryo has two scissor switches at either end of the system, and five two-way and one three-way switches at Seishonen Koen, (where the maintenance facility and control center are located).

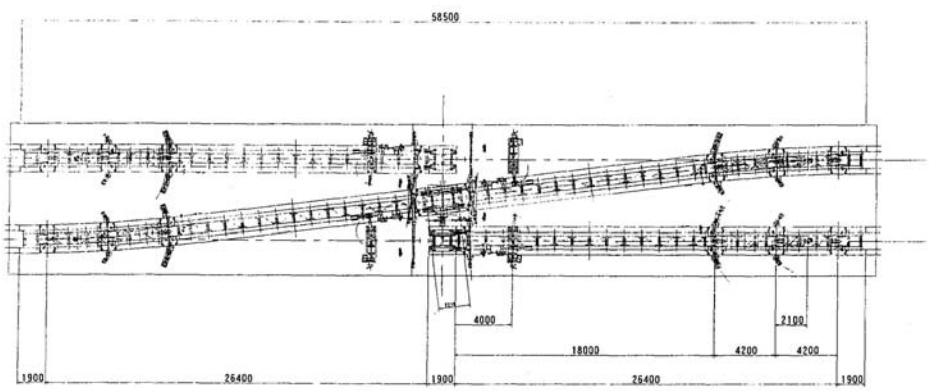

Figure 4-17 Crossover / Scissors Switch

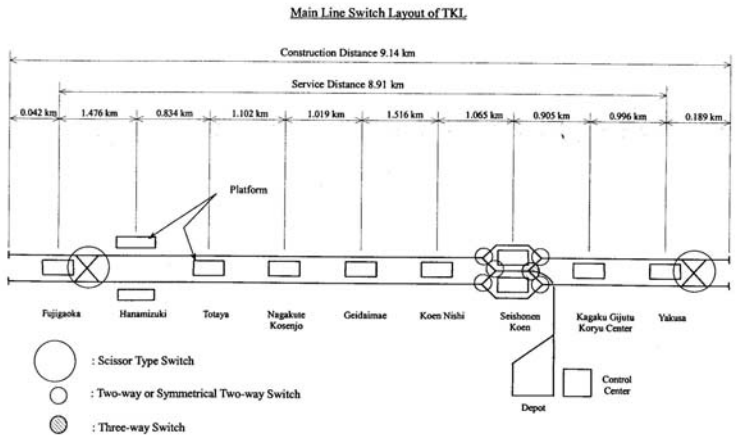

Figure 4-18 Main Line Switch Layout of TOBU-KYURYO

4.6.1.3 Alternative Switch Designs

The principal reason why CHSST is using the segmented switch for the Tobu-Kyuryo Line is that it has a history of "reliability" at the Oe test track. In addition segmented switches are the most common type used for monorail systems in Japan. In other words, CHSST has a high level of confidence based on their own and other experiences that the switch will work well in commercial operation.

While "reliability" is essential in any commercial maglev system, another goal is speed of operation. While a 15-second cycle time would be acceptable for most operations, there may be a need for a faster acting switch in some applications. One of the suggested alternatives for future consideration is a "beam replacement" switch, similar to the one that is currently in operation at the Walt Disney World monorail in Orlando, Florida, and the automated people mover (APM) system in Jacksonville, Florida. In a beam replacement switch, a straight section of beam pivots to the side while a curved section moves into place. The switches are simple and have proved to be reliable and relatively fast. The Walt Disney World switch cycles through in approximately 12 seconds and it is understood that the Jacksonville APM beam replacement switch cycles in the order of 8-10 seconds. It is estimated that the overall width and weight of the beam replacement switch would be slightly greater than the present "segmented" switch (for the same degree of curvature). However, it is anticipated that the beam replacement switch would be shorter, simpler to fabricate and less expensive to construct.

It is therefore considered that "beam replacement" switches could be a worthwhile alternative to study for applications of the CHSST system in the United States.

4.7 GUIDEWAY DESIGN ISSUES

4.7.1 Overview

This section examines issues that are ancillary to the guideway itself but which nevertheless impact the design to some degree. Topics include the use and integration of an emergency

walkway, the operational implications of snow and ice, corrosion protection of the various components that comprise the guideway, and grounding.

4.7.2 Emergency Evacuation

The configuration of the guideway will be impacted by the type of emergency evacuation system that is provided for passengers on a train that is stranded at some point along the guideway. For the Tobu-Kyuryo Line (TOBU-KYURYO) being constructed in Nagoya, an emergency walkway has been provided along the center of the dual guideway. The walkway is continuous along the full length of the guideway. An elevation and side view of the walkway is shown in **Figure 4-19**. The walkway sits level with the top of the pier caps so it is necessary to climb down to it. In the event of an emergency, the evacuation procedure is as follows:

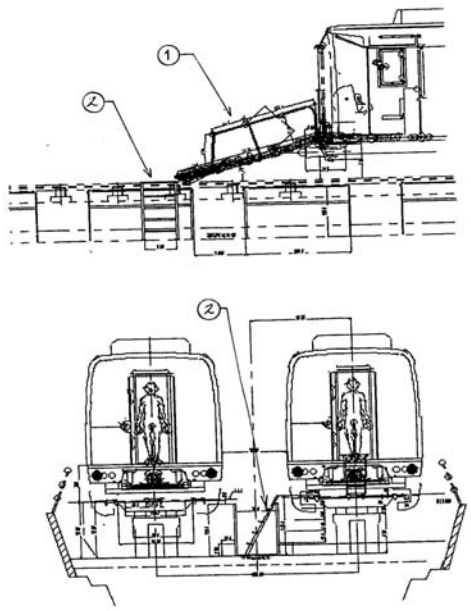

Figure 4- 19 Tobu-Kyuryo Line Emergency Walkway

(i) The door at either end of the vehicle is opened and a gangplank deployed from the train to the guideway. (Item 1 on **Figure 4-19**)

(ii) A ladder is then placed between the guideway and emergency walkway. (Item 2 on **Figure 4-19**).

(iii) Passengers evacuate one by one through the front door of the vehicle onto the guideway then climb down from the guideway to the emergency walkway.

In the event of an emergency such as an onboard fire, the shielding and materials used within the vehicle will provide a certain length of time for passengers to evacuate. The objective is to evacuate passengers as quickly and safely as possible. A disadvantage of the TOBU-KYURYO configuration is that it is much slower to evacuate the vehicle from the front where passengers

disembark one by one than from the side doors where a larger number can disembark at the same time. In addition, it is more difficult for persons with disabilities to quickly evacuate from the front of the vehicle. Plus, it is more difficult for people assisting them to negotiate a path over the sleeper / rail assemblies. The sleeper / rail assemblies may prove to be more of an impediment to speed of evacuation than the constriction imposed by the door at the front of the vehicle.

The speed of evacuation would be considerably improved by using a direct fixation method to attach the rails (as shown in **Figure 4-22**) since the top of the guideway would be smooth with no sleepers to climb over. Another means of providing a smooth, continuous surface for evacuation would be to provide a grating over the sleepers or between sleepers. Such a system would require careful detailing to ensure that anchor bolts and other components needing maintenance could be readily accessed.

However, the most efficient and safest way to evacuate the vehicle would be from the side doors. Evacuation could be accomplished in one of two ways. A spare vehicle could be brought up alongside the stranded vehicle and a gangplank suspended horizontally between the vehicles. Evacuation would be quick with no encumbrances to negotiate or climb over. Alternatively, an emergency walkway could be suspended in the center of the dual guideway such that the walkway surface would be at the same level as the floor level of the vehicle. A short ramp is all that would be required to evacuate the vehicle quickly.

The selection of evacuation methods would be driven by safety, constructability, practicality and aesthetics. One of the reasons the walkway for the TOBU-KYURYO is located at the same level as the top of the pier caps is that it is easier and less costly to construct, and also can serve as a service walkway for maintenance with convenient access to the underside components of the train. An elevated walkway would be more costly and detract from the sleek appearance of the guideway. The presence of an emergency walkway also adds to the overall width of the pier caps and moves the center of the loads from the vehicles further out from the centerline of the piers, thus increasing the eccentric loads acting on the piers and foundations. While the design of the means of evacuation will be driven primarily by safety, use of the top surface of the guideway itself as the emergency walkway has merit if the option of direct fixation of the rail is considered in the future.

4.7.3 Snow and Ice / Guideway Heating

The performance of the CHSST-100L system in snow and ice conditions is an important consideration due to the geographic diversity of the United States. The system operational requirements set forth by the FTA in the Low Speed Maglev Technology Development Program "General Requirements Document" for snow and ice are as follows:

Snow: System to accommodate up to 300 mm (12-inches). Clearing is assumed to take place during off-peak operation or via brushes attached to the vehicle.

Ice: System to accommodate up to 6 mm (0.25-inches) per hour. It is surmised ice can build up to 12 mm (0.5-inches) during the time when the system is not in use.

Nagoya, where the CHSST Oe test track is located, is subject to snow and icing conditions but not to the degree that is targeted in the FTA General Requirements Document. Even though snow accumulation is typically not severe in Nagoya, CHSST has operated the vehicle in snow and ice conditions. **Figure 4-20** is a photograph of a CHSST-100S vehicle operating in snow conditions. The CHSST vehicles have not exhibited any problems in shoving the snow aside, and CHSST has reported no significant degradation in operational performance while levitated during such conditions.

Figure 4-20 CHSST-100S Vehicle Operating in Snow Conditions

The system safety issue of the performance of the hydraulic braking systems during snow and ice conditions is a concern and was evaluated by CHSST during testing at the Oe test track. Details of the testing are as follows:

- Test Date: January 26, 1994
- Location: Oe test track, Nagoya, Japan
- Atmospheric Temperature: 0.5 ^{0}C
- Rail Surface Temperature: - 4^{0}C
- Icing Thickness: 2 mm on the skid surface and blade outer surface
  0.5 mm on the blade inner surface
- Vehicle Speed: 100 km/hr for Hydraulic Braking Test

The results of the hydraulic braking test were as follows:

	Icing Rail		Non-Icing Rail	
	Deceleration Rate	Coef. Of Friction	Deceleration Rate	Coef. Of Friction
1st Test	0.03~0.04G	0.04~0.05	0.13~0.24G	0.16~0.29
2nd Test	0.03~0.04G	0.04~0.05	0.14~0.24G	0.17~0.29

Note 1: Icing is not expected under normal condition on the rail blade inner and outer surfaces that are used for hydraulic braking. For the test, those surfaces were artificially chilled and water impinged to make ice accumulation.

Note 2: Under normal operation, the electrical brake is used primarily to stop the train; the hydraulic brake is only supplementary. During the test only the hydraulic brake was used to stop the train.

Note 3: Under cold weather conditions it is recommended that de-icing be done on the skid surfaces as a normal operating procedure.

Under the FTA Guidelines it is surmised that ice could build up at a rate of 6 mm/hour and accumulate up to 12 mm during times when the train is not operational. If ice is allowed to accumulate up to 12 mm then obviously the train would be unable to run without either removing the ice or increasing the levitation gap of the train. Increasing the levitation gap is impractical, therefore in the event that snow and icing conditions beyond the safe operational limits of the train are expected, it is recommended to run the train continuously and / or employ the use of a maintenance / service car with brushes and scrapers to remove the ice from the rail. Guideway and rail heating should probably be considered only for systems subject to severe snow and ice conditions. The reason is that guideway heating has been installed in several automated people mover (APM) systems in the United States with limited success. The systems are very expensive to install, and of limited reliability. The cost of running the train a few hours more each day to keep the guideway free from ice and snow buildup is judged to be a more cost-effective solution.

4.7.4 Corrosion Protection

Considering the potential harsh environments in which a maglev system could be located within the United States, corrosion protection is an issue that will require close attention. The materials used in the guideway construction can be exposed to acid rain and other chemicals that can attack and corrode both exposed structural steel and the reinforcing steel within the concrete elements. Considering the intended 75-year design life of the guideway, corrosion protection is very important.

During the demonstration visit to Japan in March 2002, it was visible that many of the components of the sleeper and rail assembly were rusted to varying degrees, including the expansion devices at the rail joints. The bolts, nuts and washers did not appear to be galvanized nor zinc-coated. This is because corrosion treatment was limited to painting. The intended life of the test facility was only for few years so corrosion protection was not considered an issue at the time of the construction. Emphasis was on the maglev technology testing and less on protection of rail and sleeper components.

For commercial system application, it is recommended that the bolts, nuts, washers and other exposed steel components be galvanized or zinc-coated in order to prolong the life of the sleeper / rail assembly, switches, and other components of the guideway and to minimize future maintenance and realignment expenditures. To protect against corrosion, it is understood that CHSST will specify a five-coat paint system to protect the steel components of the TOBU-KYURYO. The various components of the TOBU-KYURYO will be protected as follows:

- Rail: Anti-weather (atmospheric) steel (JIS- SMA400AW), partly with painting or surface treatment (weather coat treatment)
- Rail Fixing Bolt: Anti-weather (atmospheric) high tension torque control bolt
- Sleeper: Structural steel (JIS- SS400) with zinc plating

- Anchor Bolt: Structural steel with zinc plating
- Other Parts: Structural steel, SUS, zinc plating

Some Departments of Transportation in the United States utilize a three-coat paint system. Therefore close attention to details such as paint type, compatibility and thickness will be needed when constructing the guideway in the United States.

It is also recommended that an exterior coating be applied over exposed concrete elements to limit the penetration of water and other atmospheric chemicals and to provide a uniform appearance to all concrete surfaces. Various Departments of Transportation utilize different methods to limit the penetration of water and its potential corrosive effects. Some use penetrating sealers while others use concrete admixtures to increase impermeability. It is recommended that a penetrating sealant be used since additional coats can be applied over time on an as-needed basis. The degree of corrosion protection required will be dependent on the climate, the conditions to which the guideway is subjected to, and a life cycle analysis of the cost of initial and follow-up applications.

4.7.5 Grounding

In order to protect the guideway structure and equipment from a lightning hit or a short-circuit of the 1500V DC electrical power supply, grounded connections will be installed. The system that will be used for the TOBU-KYURYO is to use the reinforcing bars in the pile cap as the ground terminal. The amount of electrical resistance at the reinforcing bar shall be 2Ω or less. If the resistance is larger than 2Ω, the ground wire is connected to another reinforcing rod of the adjacent pile cap. The spacing between ground wires shall be a maximum of 200 m (656 ft). **Figure 4-21** illustrates the details of the attachment of the ground to the piers and to the rail. The vinyl plastic insulated ground wire is attached to the outside of the concrete piers with clamps and shall be protected for the first 2 m (6 ft) by a rigid conduit. The terminal and ground wire shall be crimped, and the terminal at the guideway shall be fixed to the sleeper with a bolt or to the rail with a bonding wire. From the pile cap, the ground wire is attached to the outside of the concrete piers

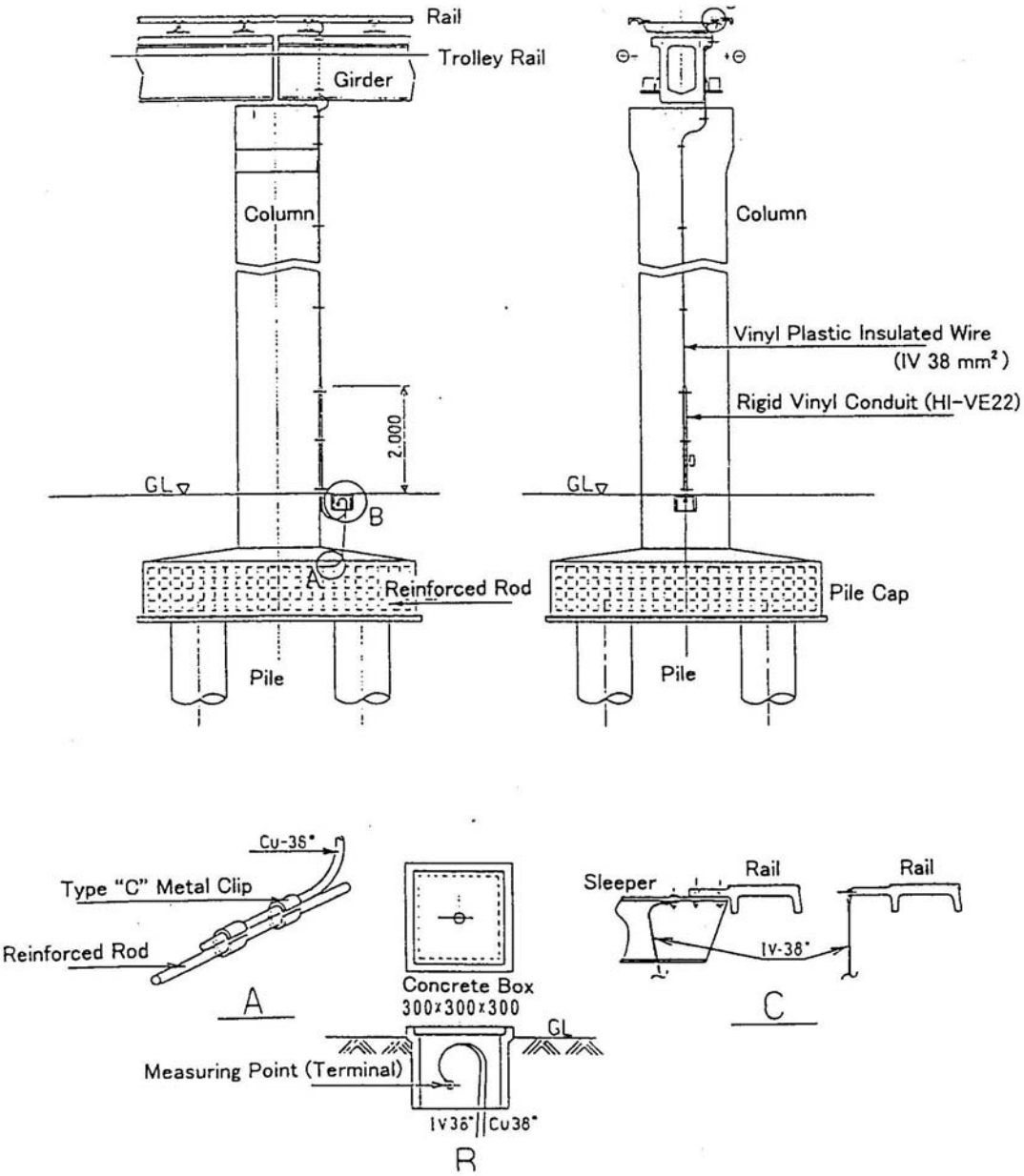

Figure 4 - 21 Typical Grounding Details

4.7.6 Summary

In order to evaluate and improve both the short-term capital costs and long-term operational costs, it is important to understand the ramifications of a number of issues that affect the design and maintenance of the system. The provision of emergency walkways, the operational implications of snow and ice, corrosion protection and grounding are all items that need to be closely evaluated for implementation of the CHSST system in the United States.

4.8 POTENTIAL GUIDEWAY IMPROVEMENTS

4.8.1 Overview

The following section identifies a number of potential guideway design and construction improvements that have been evaluated. The focus of this section is on rail fixation methods, since this appears to provide the maximum benefit from the perspective of constructability, aesthetics, and cost effectiveness.

4.8.2 Rail Fixation Methods

Currently CHSST utilizes a steel sleeper system to attach and align the rails that provide the guidance pathway for the train. The typical arrangement of the sleepers and rail / reaction plate system relative to the guideway is shown in **Figure 4-22**. The aluminum reaction rail sits atop the steel rail, which in turn is attached to sleepers at approx. 1.1 m (3.6 ft) on center. The sleepers are bolted to the precast girder through a concrete pedestal. CHSST uses the steel sleeper system because in their view and experience the sleepers and rails can be manufactured to a tolerance that provides for efficient installation of the rails in the field. The MUSA team believes the potential exists to use a more direct fixation method. The benefits of a more direct fixation method would include:

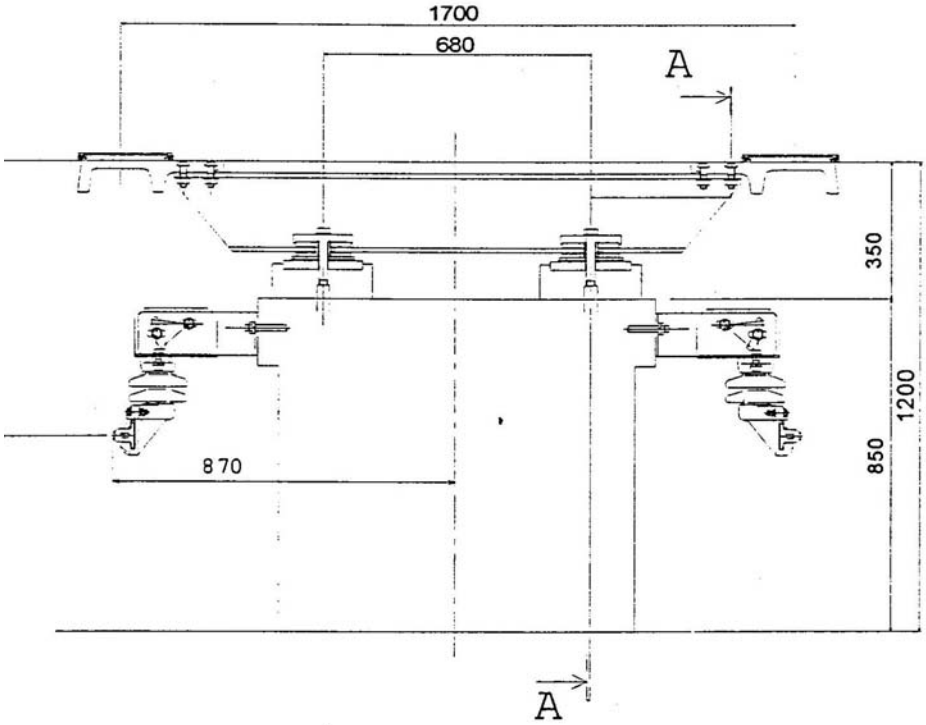

Figure 4 - 22 Standard Rail / Sleeper Arrangement

- Reduced overall weight (dead load) by eliminating the sleepers
- Reduced overall structural depth and reduced vertical eccentricity in rail connection
- Reduced installation time (if details are carefully designed)
- Less future maintenance
- Improved aesthetics
- Ability to utilize the top surface of the girder as an emergency walkway

Key Issues: In evaluating the feasibility of using alternative rail fixation methods, a number of issues need to be addressed. They include:

- Construction Tolerances: The construction and alignment tolerances for the CHSST system are quite stringent. CHSST supports the use of the steel sleeper system since its past installation experience indicate that the tolerances can be met with this method relatively easily.

- Durability and Fatigue: With a target design life for the guideway of 75 years, any detail developed must maintain its integrity in terms of fatigue and durability. This can be achieved by intelligent detailing, and careful review of fatigue related stresses.

- Vibration: Vibration problems caused when the natural frequency of the fluctuating magnetic field matches that of a particular component of the rail support system need to be evaluated.

- Maintenance / Adjustability: Since the alignment tolerances of the rail are tight, any detail developed needs to provide a relatively easy means of adjustment as the system ages and some components shift relative to each other.

- Cost: The primary objective of any design task is to develop a safe and effective design solution at reasonable cost, not just in terms of capital cost but long-term operations and maintenance costs.

- Historical Precedence: Experimentation though innovative, does not assuage Owner concerns as to whether the rail fixation system will perform well in the long-term. Design details adopted should therefore utilize conventional methods whenever possible.

- Aesthetics: One of the stated objectives of the FTA General Requirements Document is to develop a guideway that will be aesthetically pleasing to a large majority of the public. Elimination of the sleeper / rail assembly would significantly improve the aesthetics of the guideway system and promote the sleekness and modernity of the maglev system.

- Emergency Egress: Elimination of the sleeper / rail system would remove an impediment to the direct evacuation of passengers from the front of the vehicle during an emergency. A rail attachment method that provides a smooth surface along the guideway would be very beneficial in this regard.

The search for the optimal alternative solution requires balancing the sometimes-conflicting requirements of these various issues.

Alternatives Previously Evaluated by CHSST: In addition to The Chubu-HSST's typical steel sleeper / rail attachment method shown in **Photo 4-7**, several different rail fixation methods have been tried by CHSST in the past at its test track in Oe, Nagoya. These include:

Photo 4-7 Typical Sleeper Rail Attachment

- Direct connection with a one-piece extension (**Photos 4-8** and **4-9**)
- Direct connection with a two-piece extension (**Photos 4-10** and **4-11**)

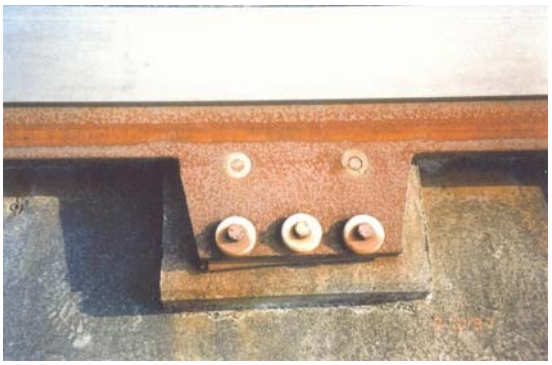

Photo 4-8 Direct Connection w/1 Piece Extension

Photo 4-9 Direct Connection w/1 Piece Extension

Photo 4-10 Direct Connection w/2 Piece Extension

Photo 4-11 Direct Connection w/2 Piece Extension

CHSST conducted manpower studies to document the effort required to install and adjust each alternative. The following table shows the number of man-days to install a 100 m length of rail of each type:

Table 4-2 Sleeper / Rail Installation Rates

Method	(Man-days / 100 m)	CHSST Comments
Steel Sleeper (Standard)	66	Standard installation
Direct Connection	231	Rail adjustment more difficult Concern re thermal stress between beam and rail
Steel Bracket on Side	108	Rail adjustment more difficult Concern re thermal stress between beam and rail
Precast Concrete Sleeper	64	Precast sleeper 15% heavier than standard steel sleeper

The Chubu-HSST's experience indicates that the use of direct connection requires significantly more manpower to install than its standard steel sleeper system. However, it is believed that the main reason for the considerable time required to install the direct connection alternative can be attributed to the details used. The improved direct fixation detail described below should result in a more streamlined installation process. This, together with improved construction methods through the use of a jig, and tighter quality control on the anchor bolts and cross slope tolerances, should improve the detail and reduce installation time.

Improved Direct Fixation Detail: An improved direct fixation detail that was studied by members of the MUSA team in a previous application is shown in **Figure 4-23**. (Figure 4-23 is illustrative only. The second trolley rail was omitted for clarity.) The detail utilizes a wide precast concrete girder combined with a composite concrete deck placed as a secondary pour. Composite action would be provided through reinforcement bars embedded in both the precast concrete girder and secondary deck slab pour.

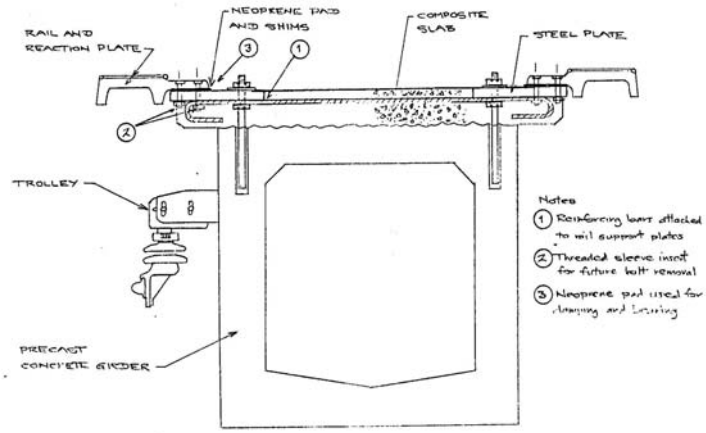

Figure 4-23 Improved Direct Fixation Detail

The rail would be attached to a separate steel plate at the same spacing as the standard steel sleepers. Different plate thickness and spacing could be evaluated to minimize cost and minimize vibration problems. The separate steel plates would in turn be attached to reinforcing bars that would be arranged to make the plates on both side of the beam act as a unit. The reinforcement would also serve as a tension tie and assist in placement of the base plates. Anchor bolts with leveling nuts would anchor the embedded plates. To achieve tight tolerances, the anchor bolts could be drilled / epoxied into drilled and roughened holes in the precast concrete girders. With tight quality control at the precast yard and with tight erection control methods, the anchor bolts could be installed during precast operations. Prior to pouring the secondary pour (composite slab) the rail support plates can be set to the proper elevation by adjusting the leveling nuts. Further adjustment of the rail after erection can be accomplished by adjusting the shim height at the rail support connection. This alternative eliminates the sleepers, reduces weight, improves aesthetics and provides a good walking surface for emergency evacuation through the end of the train. It also provides an opportunity to install heating cables should the issue of icing be chosen to be solved in that manner.

4.8.3 Foundation Design

During the demonstration visit to Japan in March 2002, discussions were held with Yahagi Construction, one of the main contractors for the Tobu-Kyuryo Line (TOBU-KYURYO) in Nagoya. Representatives of Yahagi Construction indicated that the piers supporting the guideway girders are typically taken down and founded on bedrock in Japan. They indicated that this was a standard practice in Japan. While this approach may seem ideal, it would be impractical and very expensive in many instances in the United States where solid bearing is not close to the surface. Thorough geotechnical investigations need to be performed for each site to establish soil / ground types, evaluate settlement, and identify the appropriate form of foundation to be used. In the United States the foundations may typically consist of a pile cap sitting on top of piles; with resistance to movement being provided by a combination of end bearing and side-friction along the outer surface of the piles. By carefully selecting the diameter, number and spacing of the piles, it would not be necessary to take the piles all the way down to bedrock.

Piles come in many forms (driven H-piles, drilled shafts, mini-piles etc.), and would be selected depending on the prevalent soil and ground conditions.

In certain applications, monoshafts (a single drilled shaft that is typically larger in diameter than the pier) may also be considered. With monoshafts, obstructions can be identified and sometimes more easily removed since the hole is larger. The use of monoshafts has become quite commonplace and is particularly applicable when cobbles and boulders are part of the matrix of the ground conditions. Other advantages of monoshafts are that their use can eliminate constructing pile caps, resulting in fewer conflicts with utilities, making it easier to accommodate future expansion, and making it easier to install columns in confined areas. A disadvantage of monoshafts is that their use on larger column heights (greater than 25 ft) can make the structure as a whole more flexible. This can be verified by a lateral load analysis. In summary, with a comprehensive geotechnical test program and analysis, it will be possible to closely identify soil conditions and optimize the foundation design to avoid having to extend piles all the way to bedrock. The most appropriate foundation type can then be selected based upon a combination of cost, impact to existing facilities and utilities, structural performance, and impact to future expanded development.

4.8.4 Design and Construction Approach

The design and construction approach currently used by CHSST in Japan is a traditional one where CHSST engineers establish the general design criteria and construction tolerances, together with some standard design details. Third party professional design engineers (retained by the Aichi Prefecture in the case of the TOBU-KYURYO) then complete the detailed design and construction documents. The project is then bid and the successful contractor(s) then builds the guideway and civil works in accordance with the construction documents. In summary this is the traditional ‘design’ then ‘bid’ then ‘build’ approach where the contractor has limited input into the design. In the United States the design/build approach (and variations thereof) where the contractor receives the base design criteria and then develops the detailed designs becoming more prevalent. Giving qualified contractors (especially experienced ‘design-build’ contractors) the opportunity to inject their own special experience and technical innovation in a bid response may yield more cost savings than the more traditional design-bid-build approach utilized for the TOBU-KYURYO in Nagoya. While this approach should reduce construction costs, there is usually some trepidation that the level of quality of construction (tolerances, alignment, etc.) desired may not be provided. This concern can be eliminated by preparing a clear and concise set of construction documents and by exercising a high level of technical oversight and quality control during design and construction with a third party specialist engineering firm.

4.8.5 Efficiency of Construction

Another way in which to realize economies of construction is to carefully plan the alignment and setting out of the piers to simplify curves and maximize the repetition of girder shapes and spans. Reducing the number of precast forms and simplifying the geometries while seeming an obvious concept is often not done. An alignment involving complex curves and a large number of varying span lengths not only complicates and increases the required engineering time, but also carries all the way through fabrication, transport, placement and fine tuning of the precast elements in the field. This in turn pays dividends later during the installation of the sleeper and rail assemblies (and direct fixation of the rail should that concept be adopted). Differing girder

lengths also translate into differing designs for pier caps, piers and foundations. Keeping things simple applies just as much to guideway construction as it does to other endeavors.

4.8.6 Fabrication and Construction Tolerances

As discussed in Section 5.0, the fabrication and installation tolerances for the CHSST system are very tight. Tight tolerances translate to a high number of man-hours in the field to ensure that all the elements of the guideway, sleepers and rail are lined up and placed to their respective tolerances. Inspection of the test track at Oe exhibited a significant amount of rust build up on the rails and other components of the sleeper / rail assembly. Discussion of the maintenance history with members of the CHSST engineering team indicated that very little maintenance had been done on the track since it was first constructed over ten years ago. Some alignment adjustments had been made in the first six months the guideway was operational, but that was principally to correct alignment variances that occurred during construction. The fact that there has been minimal alignment adjustments and maintenance is not only surprising, but also encouraging from the long-term perspective of the performance of the system. It also indicates however that the fabrication and installation tolerances may be more stringent than really required for the safe and comfortable operation of the vehicle.

While the MUSA / FTA team were at the test track, there was no perceivable degradation of ride quality for speeds of up to 90 kph. Further study could be conducted to measure and evaluate alignment tolerances as they exist today along the Oe test track and then compare it with the required design tolerances to determine if relief is feasible. Cost benefit analyses would also need to be conducted to determine if the relief of tolerances would actually realize any significant savings in terms of overall construction cost. It is probable that the greatest savings would be realized by reducing the number of man-hours required to set out and align the sleeper / rail assembly.

Although CHSST recommends that the current design and tolerances are suitable for a train speed of 130 kph, the issue of tolerances would need to be closely examined if the speed of the train is to be increased from 130 kph to 160 kph.

4.8.7 Vehicle Weight

One of the most significant factors influencing the design of the guideway structure is the weight of the vehicle. Reduction in vehicle weight would generally be expected to result in a lighter guideway system including precast girders, sleeper/rail assembly, the pier caps, piers, pile caps and foundations. Some methods of reducing vehicle weight are use of composite materials for the vehicle bodies and use of more efficient and lighter linear induction motors (LIM) and other major vehicle components. These would all have an advantageous effect on the design of the guideway.

4.8.8 Value Design

The potential for incremental savings can be investigated by evaluating several of the guideway components from a “value design” perspective. Where applicable standard shapes and sizes for items such as the sleepers and bolts could be considered. Similarly, an increase in sleeper spacing may also be feasible as long as the issue of vibration is thoroughly researched. In summary, further improvements to the guideway structure would focus on constructively

challenging the design of some of the existing guideway components within the bounds of the fabrication and installation tolerances required by the CHSST system and construction practicality. This constructive approach would be used for all elements from consideration of direct fixation through to the optimal design of all structural elements including the girders, pier caps, piers, pile caps and foundations.

5 VEHICLE, SYSTEM, and SAFETY PRESENT CONFIGURATION and DESIGN POTENTIAL for MODIFICATIONS and IMPROVEMENTS

5.1 LEVITATION / PROPULSION SYSTEM

5.2.1 Module Structure and Body

The module is equipped with gap sensors, landing skids, emergency rollers and others in addition to LIM (Linear Induction Motor), electromagnets and hydraulic brakes. Ten modules per car are installed in the area below the cabin floor (5 on left, 5 on right). The left and right modules in pair, which face each other, are coupled by the connection link. Principal functions of the module are propulsion by LIM, levitation by electromagnets and braking. Propulsion force is transferred to the car body through thrust rods, and sliding tables. Levitation force is also transferred to car body by way of air suspensions and sliding tables.

The module main body consists of two end boxes and an upper beam mechanically joined. The module is equipped with gap sensors, landing skids, emergency rollers, LIM, electromagnets for levitation and hydraulic brakes. The left and right side modules facing each other are connected in pairs and coupled with a beam mechanism. Propulsion force is transmitted to car body by thrust rods and "sliding tables." Levitation force is transferred to car body via air suspension and sliding tables. The module is designed following the same principles as the car body; i.e., for minimum of 20 years in service, 120,000 operating hours, or 2 million cycles. Maximum module weight is 1,430 lbs (650 kg), and the maximum attractive EMS force is 5,720 lbs (2.6 metric tons)/module (each magnet generates 697 lbs/ft of levitation force) at the largest gap condition. Maximum vertical deflection of magnetic core is 0.04" (1.0 mm).

5.2.2 Suspension System

While the Levitation and Guidance System provide the primary suspension of the vehicle, air springs and mechanical linkages provide the secondary suspension described here. The suspension system holds the car body mildly so as to give good ride comfort, good follow-ability to the rail profile and to secure the vehicle resistibility to external disturbances. Various forces work between the car body and the modules in vertical, lateral and longitudinal directions. An air suspension system, which comprises air springs and its supporting devices, holds the car body in vertical and lateral directions.

5.2.2.1 Air Suspension System

One air spring is installed between each module end and slide table. It conveys the car weight to the module and, at the same time, buffers the module movement before it is conveyed to the car body, thus resulting in a comfortable ride. Car body is leveled at a certain height above the rails by supplying or consuming air by means of the air supply system with a source of air pressure of between 100 and 128 psi (7 and 9 kgf sq cm). The air supply system is divided into three individual systems and, thus, the car body weight is supported in a triangle form.

5.2.2.2 Lateral Mechanical Suspension System

Slide tables are installed at the front and rear of each module. They are designed so as to be able to move laterally for the vehicle to follow the curved guideway. All slide tables are connected mechanically to each other and equalize and convey lateral load to each module.

5.2.2.3 Longitudinal Mechanical Suspension

Longitudinal mechanical suspensions, which consist of linear bearings installed on the lower surface of the vehicle body floor, slide tables and thrust rods connected to slide tables, convey linear motor thrust and braking force. The thrust rod/thrust link and anti-rolling beam were designed to withstand all service and worst-case conditions below the yield strength of material used.

5.2.3 Levitation and Guidance System

The levitation and guidance system (LGS) provides vehicles with contact-less supporting of the vehicle with high reliability and high stability. (Contact-less means that the contact is seldom. The contact itself is acceptable; it does not cause failure/damage. However, frequent contact leads to wear problem of skid shoes. Going in the "down" direction, landing skids contact guideway and support module without LIM's contact to reaction plate.) It realizes good riding comfort with less impact to the environment than conventional transportation systems. LGS independently functions on each module. Ten modules in total levitate and guide one car.One control system comprises two pairs of magnets, two sensor units and one magnet driver unit (MDU). LGS is fed with power from 275V DC bus. The power source for LGS is backed up by batteries to maintain the vehicle levitated until the train comes to a complete stop even in the case of power interruption during running. (Refer to **Figure 5-1a**)

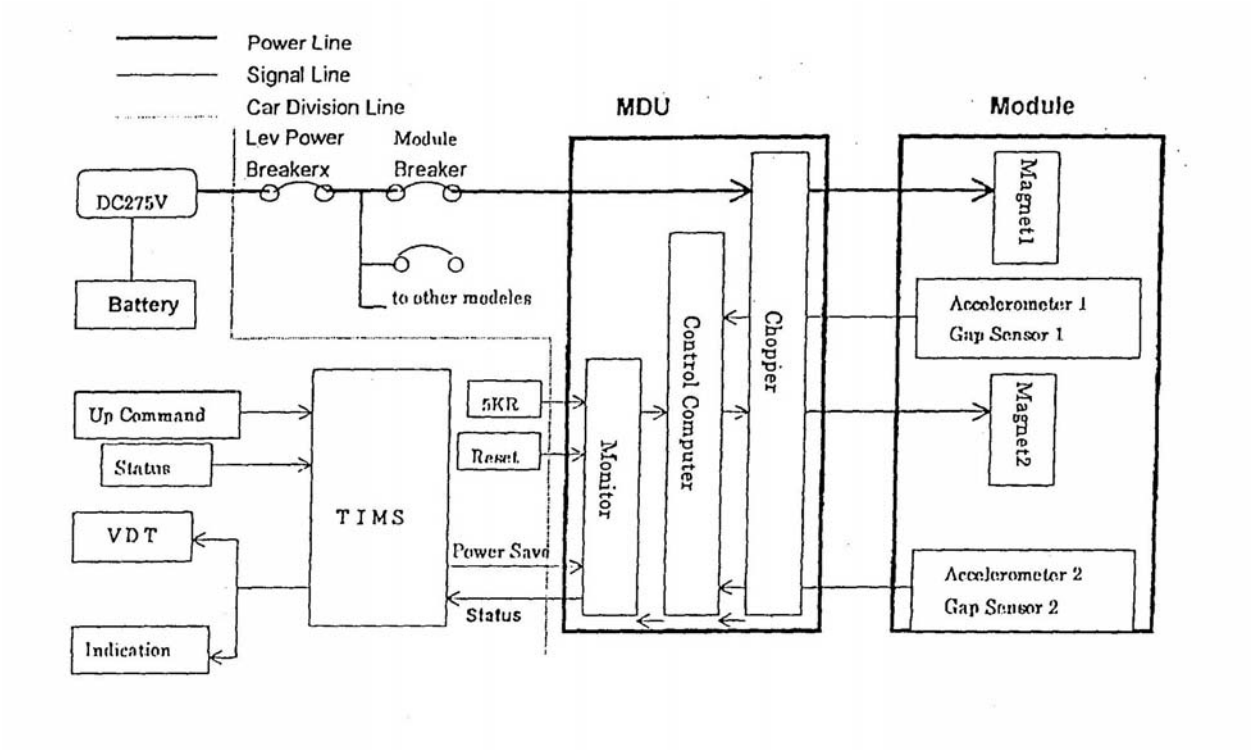

Figure 5 - 1a Levitation and Guidance System

The levitation magnet has a U-shaped iron core, which has a natural stability in the lateral direction during floating underneath the inverse U-shaped rail.

5.2.3.1 Levitation Power

Levitation power of LGS is supplied from 275V DC bus. The bus, when energized, rises up gradually to 275V so as to avoid rush current. Levitation power is supplied to each MDU separately through module breaker.

5.2.3.2 Magnet

Magnets are of normal conducting and attractive type. It has a U-shaped iron core to obtain natural stability in the lateral direction. One module has four levitation magnet coils. Each two coils are connected in series to realize two magnet systems in one module. The top of the magnet core is capped with copper alloy shoes as the provision for abnormal attraction to the rail. The electrical insulation of the coil is that of JIS F-type and has all weather resistibility. The standard magnetic gap is 0.351"(8 mm), while its mechanical air gap from the magnet shoe to the bottom of the rail teeth is set to 0.236" (6 mm). The design attractive force of each magnet is 697 lbs/feet (1,040 kgf/m) per rail, that is, 5,720 lbs/module (2,600 kgf/module).

5.2.3.3 Levitation Control System

The Levitation Control system, consisting of a Magnet Driver Unit (MDU) and sensors, utilizes a contact less supporting of the vehicles.

(1) Magnet Driver Unit (MDU)
The MDU controls the voltage of electrical power fed to the magnet to realize stable levitation. It has three sections: control computer section, chopper section and monitor section. MDU is installed at the vehicle side section above the module. Power supply to the MDU is designed to be independent so that the trouble in any certain unit does not affect other units consequently.

(a) Control Computer Section
It receives gap/acceleration signals from the sensors installed on the module and calculates for an adequate voltage to be supplied to the magnet. It also monitors levitation command from the vehicle control system (through the monitor section) and current signals from the chopper section. Thus, it sends the concluded magnet voltage signal to the chopper section.

(b) Chopper Section
It chops the 275V DC power according to the PWM signal sent by the control computer section and feeds the magnets with the chopped DC power. One MDU has two channels of chopper. The rated current of the MDU is 45A and the maximum allowable current is 125A.

(c) Monitor Section
It receives levitation command and sends levitation status information to/from the vehicle control system. It also provides the gap signals for the purpose of LGS monitoring test.

(2) Sensor
The sensors chapter the module levitation status variables to MDU. Gap sensor is installed on the top of the magnet, and accelerometer nearby.

5.2.3.4 Indication

LGS sends current levitation status (floating or landing) and current system activity (working or failed) to TIMS.

5.2.4 Levitation and Guidance System Requirements

5.2.4.1 Levitation

The requirement of HSST levitation system is “capability not less than 2600 kg (5720 lbs) /module continuous levitation”.

The levitation force of the magnet can be described as follows:

$$f_v = \frac{\mu_0 A N^2 I^2}{4\delta^2}$$

fv: Levitation Force (N)
μ□: Vacuous Permeability 4π×10-7
A: Pole Area (m)
N: Coil Turn
I: Coil Current (A)
δ: Magnetic Gap (m)

For example, let the variables as:
A=0.0345 m2 (W 0.028 m, L 1.232 m) 0.028 m
N=304
I=29 A

δ=0.008 m
Then the resulting force is 13,162 N, which is 2961 lbs (1343 kgf).

However, magnetic saturation gives an adverse effect as the magnetic flux density increases in iron core. An experiment on the HSST magnet revealed a levitation force profile of the module as shown below. The magnetic saturation takes place around 3,000 kgf while the rated levitation force and nominal air gap are 2600 kgf (5720 lbs) /module and 8 mm (0.315”). Therefore, this experimental result can be judged as suitable for HSST suspension**. (Figure 5-1b)**

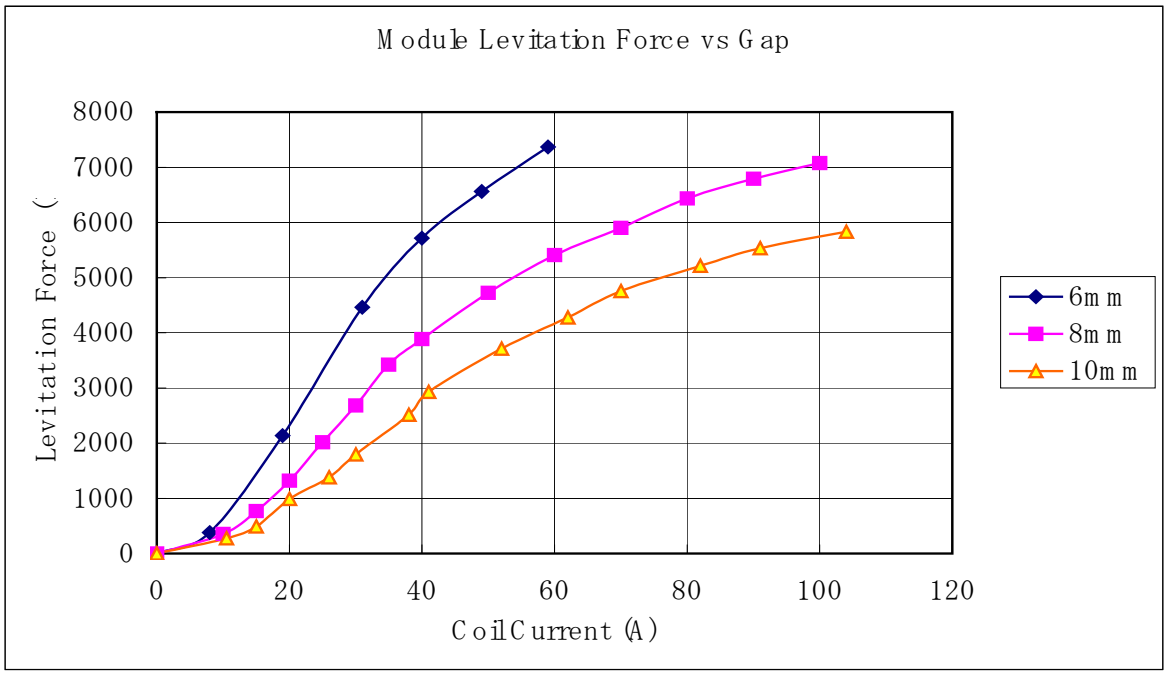

Figure 5-1b Module Levitation Force vs. Gap

5.2.4.2 Guidance

The requirement of HSST guidance system is “guidance capability not less than 20% of car weight”.

The guidance force of the magnet can be described in relation with levitation force as follows.

$$\frac{fl}{fv} = 0.43\frac{\delta l}{wp}$$

fv: Levitation force
fl: Guidance Force
δl: Lateral Displacement of Magnet
wp: Magnet Core Pole Width

The coefficient of 0.43 is an experimental result as shown below.
The pole width of HSST magnet is 28 mm (1.1”). The above formula shows that a half-pole displacement of 14mm (the guidance shoes of the module (Stopper of Module Laterally) are

located 15mm apart from the center) gives a guidance force, which is 21.5% of car weight. Therefore, this experimental result can be judged as suitable for HSST suspension. **(Figure 5-1c)**

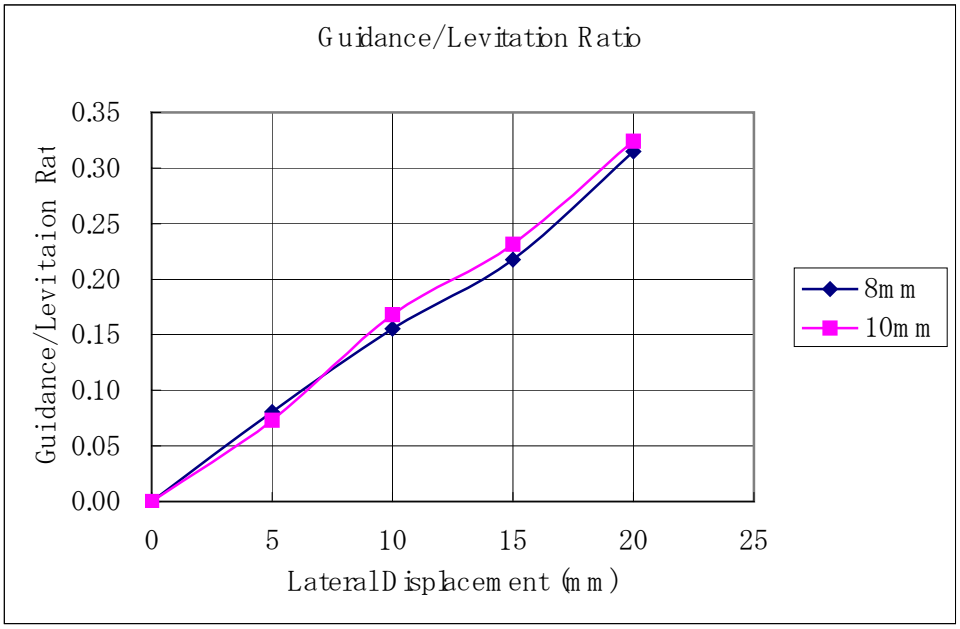

Figure 5-1c Guidance / Levitation Ratio

5.25 Propulsion

The propulsion system provides vehicles the propulsion force and the electrical braking force by using following devices.
(1) Current Collector and High Voltage Main circuit of the electrical power system
(2) Variable Voltage Variable Frequency (VVVF) Inverter, which transforms DC power into the appropriate AC power for the Linear Induction Motors (LIM)
(3) Primary section of the LIM on the modules
(4) Secondary section of the LIM (Reaction plates on the guide way.)

Main circuit schematic is shown on **Figure 5-2.**

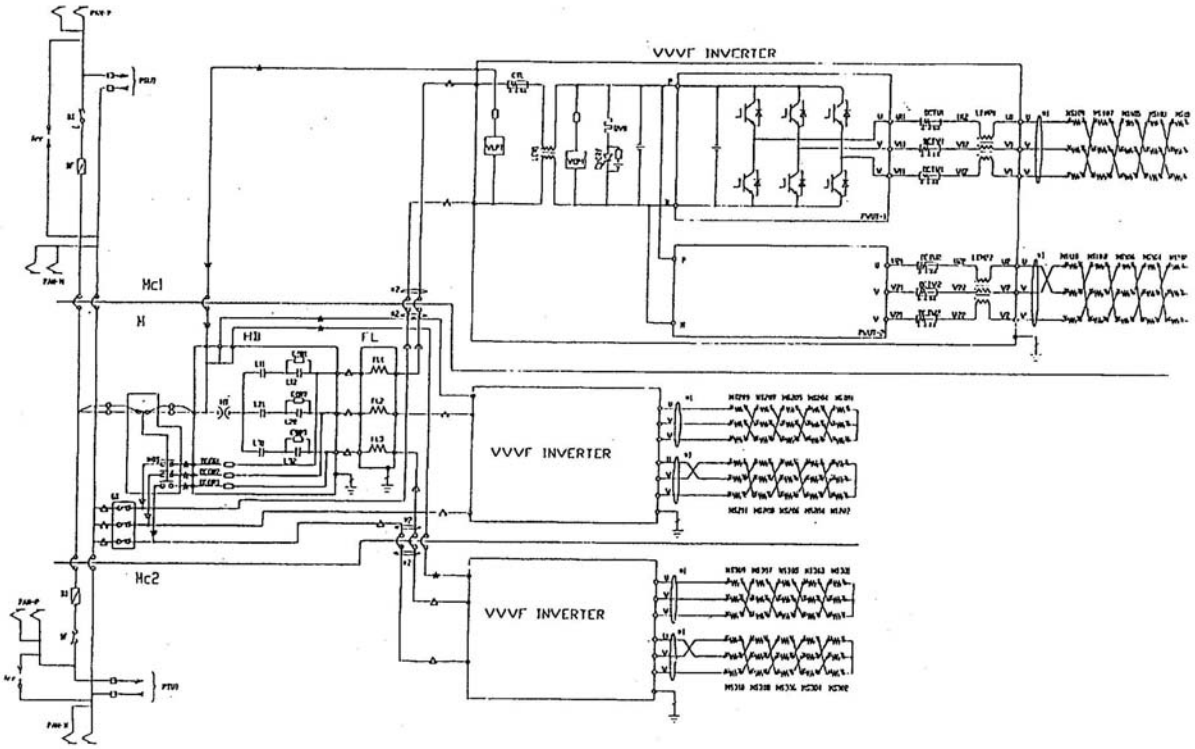

Figure 5-2 Main Circuit Schematic

5.2.5.1 System Composition

The propulsion system consists of one inverter system and ten LIMs for every car.
The LIMs are electrically connected in an arrangement of 5-series, 2-parallel (5S-2P) per a car.
The propulsion force is generated by the LIMs when VVVF inverter supplies AC power.
The braking force is also generated by the LIMs, under the control of the brake command controller.

5.2.5.2 Major Equipment

(1) VVVF Inverter
The electrical power supplied through the high voltage input section is inverted to the electric power, having appropriate voltage and frequency by the VVVF inverter. Although the current control is basically made by the thrust command calculated by using an ATO notch signal or manual notch signals, the thrust command is compensated by the vehicle weight data, which is picked up by air suspension pressure transducers. In the higher speed range, the thrust is limited due to the limitation of output voltage of the inverter. The output frequency is also an important factor determining the speed of the vehicle. Non-contact speed detection devices are used as a source of speed data for the inverter sys.

There is a predetermined slip frequency that represents the difference between the inverter output frequency and synchronous frequency, which is proportional to the vehicle speed. The applied frequency to the LIM is controlled both in acceleration and deceleration ranges.

Major Specifications of the VVVF Inverter is as follows:

(a) Trolley Rail Voltage: 1500 V DC
(b) Max. Output Voltage: 1100 V AC
(c) Max. Capacity: 3100 kVA / 2 car Unit
(d) Frequency Range: 0~90 Hz
(e) Type of Control: Voltage control type, PWM (PWM: Pulse Width Modulation)
(f) Cooling Type: Forced air-cooling

(2) Linear Induction Motor (LIM)

Each car is equipped with a LIM unit mounted on each of the 10 modules. The LIM is installed on the under surface of the module's main structure and supported at multiple fixing points. Each LIM has the dimensions of approximately 1.8 m long, 0.60 m wide, and 0.08 m thick.

LIM Specifications

(a) Thrust (nominal): 3000 N/LIM
(b) No. of Phase / Pole: 3 phases/8 poles
(c) Material of Coil: Aluminum
(d) Current (Max): 380 A
(e) Secondary Conductor (track): 4 mm thick Aluminum plate

The LIMs are electrically connected in an arrangement of 5-series, 2-parallel (5s-2p) per three cars. The propulsion force is generated by LIMs when the VVVF inverter supplies appropriate AC power. The braking force is also generated by the LIMs under the control of the brake command controller. The electrical power supplied through the high voltage input section is inverted to the electrical power, having appropriate voltage and frequency by the VVVF inverter. The current control is basically made by a thrust command calculated by use of notch signals. The thrust command is compensated by the vehicle weight data that is picked up by air suspension pressure transducers. At high speed, the thrust is limited due to the limitation of output voltage of the inverter. The output frequency is also an important factor determining the speed of the vehicle. Contact less speed detection devices are used as a source of speed data for the inverter system. There is predetermined slip frequency that represents the difference between the inverter output frequency and the synchronous frequency, which is proportional to the vehicle speed. The applied frequency to the LIM is controlled both in acceleration and deceleration ranges.

The purpose of the emergency roller system is to support the train when the levitation function is lost in whole or in part. The emergency rollers and hydraulic actuators are installed near each landing skid and at the front and rear ends of each module respectively. The emergency rollers can support the total vehicle weight by operating the hydraulic actuator. Hydraulic power is supplied by the primary hydraulic system. Emergency roller hydraulic system consists of a solenoid operating valve, a check valve, a resistor, 10 self-sealing couplings and 40 hydraulic actuators/car. The solenoid operating valve is installed under the floor and is operated by the Emergency roller switch in the operator's compartment. When the emergency rollers are in the extended positions, the train can run under it's own propulsion.

In the braking mode, the phase of the AC current in the primary winding on-board the vehicle is reversed, causing an interaction between the magnetic fluxes in the primary and secondary

winding, generating a retarding force on the vehicle. Power induced back into the primary winding as a result of the braking action is returned to the wayside.

5.2.5.3 EMI

Electromagnetic Interference (EMI) is a term that relates to the condition where equipment and systems cannot work in their normal environment without interference between each other. Proper grounding, careful circuit layout, and shielding will accomplish protection against any interference. To reduce interference power cables and signal cables will be routed in separately. The signal cables will be twisted pair shielded cable, as required. The shield conductor will be connected to the zero reference of the signal (ground) only once. The shield and the signal reference ground will be grounded at the same point. Circuit layout will avoid excessive crowding, long adjacent signal paths and unnecessary wire crossings.

5.2.6 Towing Capabilities

Data regarding the towing capabilities of the latest 3-car train are as follows:

Maximum Thrust of LIMs (at low speed)

Normal mode (4 km/h/sec=2.49 mile/h/sec): 28,890 N/car, 86,670 N/train
Boosted mode (vehicle rescue operation mode): 36,890 N/car, 110,670 N/train

Drag Force

Drag force coefficient of healthy train in levitation: negligible
Drag force coefficient of disabled train landed on emergency rollers: 0.035
Drag force of 26x3 ton train: 26,000x3x9.8x0.035 = 26,754 N
Maximum loaded 28x3 ton train: 28,000xx39.8x0.035 = 28,812 N

Towing Capability

- On level guideway

Propulsion force of coupled train (disabled and healthy) = 81,858 N
(110,670 N/train - Drag force 28,812 N)
Fully loaded and empty train mass = 28,000x3 + 18,200x3 = 138,600 kg
Maximum acceleration of coupled train = 0.59 m/sec/sec = 0.06 g
So the coupled train has sufficient capabilities to push/pull on level track.

- On Gradient

Maximum gradient of Tobu-Kyuryo Line: 6 %
Maximum acceleration of coupled train (disabled and healthy) on 6% gradient is shown in the following tables.

- Assumed condition of disabled train (worst and very rare case)

Propulsion system: All cars are failed with zero thrust
Levitation system: All cars are landed on emergency rollers
Vehicle weight: Fully loaded 28 ton & 26 ton /car
Empty: 18.2 ton /car

Case 1. 28 ton /car for fully loaded at 6% grade:

Initial Acceleration [g]		Disabled train	
		Fully Loaded	Empty
Rescue train	Fully loaded	Impossible	0.0077 g (May be difficult to push)
	Empty	Impossible	0.026 g

Case 2. 26 ton /car for fully loaded at 6% grade:

Initial Acceleration [g]		Disabled train	
		Fully Loaded	Empty
Rescue train	Fully loaded	Impossible	0.011 g
	Empty	0.0046 g (Difficult to push)	0.026 g

5.2.7 Recommendations and Improvements

Levitation: A possible enhancement to the HSST is to increase the attractive force capabilities of the levitation magnet an additional 50%. This will allow for the reduction of the weight of the total vehicle, specifically in the "modules", the sub frames, and some of the related electrical equipment such as the magnet choppers. Additionally, the under frame would be simplified, saving weight, and the vertical and horizontal curving capability would be improved, bringing the HSST System closer meeting several of the FTA recommendations.

Propulsion: Another possible enhancement to the HSST is to increase the LIM thrust capacity and improvements in its control strategy. As part of a weight reduction effort, there may be streamlining to some of the related electrical equipment such as the propulsion invertors etc.

As previously mentioned, this would contribute in the simplifying of the under frame, and improving the vertical and horizontal curving capability of the vehicle set.

Modules: In summary, by increasing the levitation magnet capability by 50% and by increasing the LIM thrust by a similar percentage, some dramatic savings in weight could be achieved: the number of modules on the 100L could be reduced from 10 to 6, saving 2.6 tons. The total vehicle weight savings could be in the range of 5 metric tons with improvements to other on board sub-systems.

Other Sub-Systems: The following subsystems could be made more compatible to US standards by utilizing non-maglev specific, US produced systems: the doors and operators, the HVAC system, the APU/converter, the air compressor, the seats, the windows and the cabling. The repackaging of the under body equipment enclosures and the streamlining of the heavy castings of the modules structure would additional weight reductions. The use of more state-of-the-art cooling for the LIM and Invertors could also benefit the weight, space budget and system performance.

By incorporating the aforementioned recommendations, a new integration program would have to be developed to incorporate the latest advancements in materials, electrical components, coil insulation capabilities, advanced semi-conductor power handling and cooling. Simply put, it would be the goal to require equal or less power needed for better performance. The redesign effort would be worth the investment so that the system could be "optimized" with additional high tech integration.

5.3 AUTOMATIC TRAIN CONTROL (ATC)

The Chubu-HSST System that is being incorporated in Nagoya incorporates the Kyosan Automatic Train Control System. This system is described in the following paragraphs, and the terms that are used to describe this system are those that are commonly used in Japan to describe the various facets of ATC system in Japan. In some cases they do not coincide with the definitions of terms that are commonly used in the USA.

The Overall ATC system consists of a number of subsystems including: Automatic Train Operation, Automatic Train Protection, and Automatic Train Supervision.

5.3.1 Automatic Train Operation (ATO)

The ATO system has the following functions:

- Constant speed drive control
- Automatic train station stop control
- Low speed priority control
- Moving prevention control
- Door opening control
- Direction control
- Departure control

Constant Speed Drive Control Function – The ATO control device controls the train speed to follow the ATO target speed according to checking the actual train speed and the ATO target speed that is set to be within the ATP safe limiting speed for each block along the alignment.

Automatic Train Station Stop Control Function – This device controls the speed of the train continuously to stop the train smoothly at a target position of the passenger station platform.

After receiving confirmation that the train has stopped, the ATO station wayside device transmits a signal to the station on-board device that it has properly berthed.

Low Speed Priority Control Function – If a speed different than that allowed by the Constant Speed Drive Control Function is required by the TIMS or Central Control, this device will select the lower speed as the safest speed and use it as the allowed train speed for that block.

Moving Protection Control Function – When the train stops a signal is sent to apply the service brakes to hold the train in position and prevent it from moving.

Door Opening Control Function – A signal is transmitted from the wayside to the train to open or close the doors.

Direction Control Function – A signal is transmitted from the wayside to the train if it is desired to change the direction of the train.

Departure Control Function – This signal is transmitted from the wayside to the train commanding the train to depart the passenger station.

The ATO subsystem consists of three parts – the on-board control device, the on-board and wayside mounted station device, and the on-board and wayside mounted data communications device.

The ATO on-board control device has the function of constant speed control according to the ATO target speed based upon the speed limit signal received from the ATC receiver.

This device also functions as the Train Automatic Station Stopping Control (TASC), which uses position signals transmitted from the wayside to the ATO station on-board device.

The ATO station wayside device transmits the control information signals from the train control rooms located at each passenger station via a transponder antenna to the vehicle, and the ATO on-board station device transmits vehicle status information from the vehicle to the wayside.

The main control information transmitted to the vehicle is a position signal for the TASC, the station stop position such as short of long, a door opening/closing signal, and a departure permission signal. The main vehicle information transmitted from the vehicle to the wayside is train stopped, state of doors (open/closed) and the direction of travel.

The ATO data communication wayside device communicates with central control and transmits information to the Train Integrated Management System (TIMS) on the vehicles via the ATO data communications on-board device. The information transmitted to the TIMS consists of: train restarting after a station stop, inching instruction if required for proper alignment with station doors, and emergency brake reset etc. The information transmitted from the TIMS to Central Control via the ATO data communication devices includes health monitoring status conditions etc.

5.3.1.1 ATO Control Device

In order to stop the train automatically at a fixed position at the passenger station and to control the running speed between the passenger stations, the ATO control device sends an output signal to the TIMS device. This signal is based upon a number of functions including: the maximum limiting speed from the ATC receiver; the control instruction and position information from the ATO station device; the control instruction from ATO data communication device; and the control instruction from TIMS device.

Figure 5-3 shows the typical running profile of ATO.

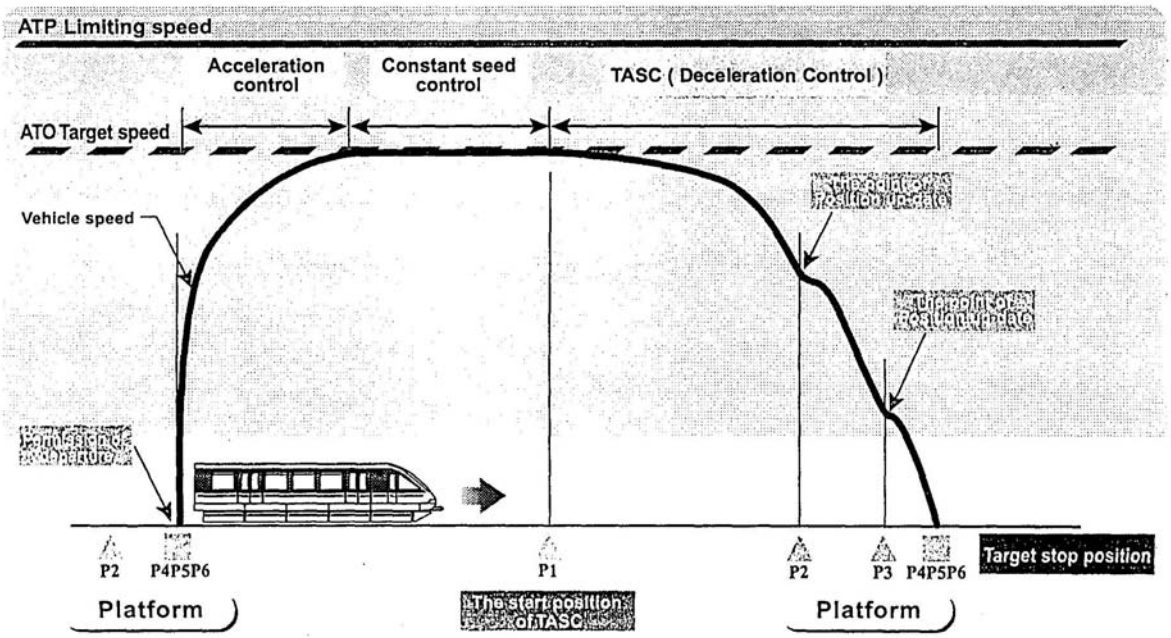

Figure 5-3 Typical Running Profile of ATO

There is one ATO control device per train, and it is composed of two separate, redundant systems a hot and a standby. It consists of the interface part, the ATO control part, the speed detection part, the failure detection part and the power supply part.

The interface part transfers the signals between the ATO control device and all the external devices such as the ATP receiver, the ATO station on-board device, speed detection devices, and TIM's devices.

The ATO control part takes the external signal and compares it to the internal vehicle status condition and the train is started, and it is stopped at a station at the prescribed position.

The control function is as follows.
Setting of target speed
Start and acceleration controls
Constant speed control
Deceleration control
TASC
Inching control

The speed detection part receives the train speed information from the speed detection device and calculates the speed of the train, the distance, and the acceleration or deceleration.

The failure detection part of the ATO control device is composed of two channels, and the failure is monitored in each channel. If the master channel (#1) fails, the slave channel (#2) is selected. If both channels fail full service braking is applied.

5.3.1.2 ATO Station Device

The ATO station device is comprised of the ATO Station Transponder mounted on the guideway at the passenger station platform, the ATO Station Wayside Device installed in the passenger station equipment room, and the Station Transmission Device installed at Central Control. It is shown schematically in **Figure 5-4**.

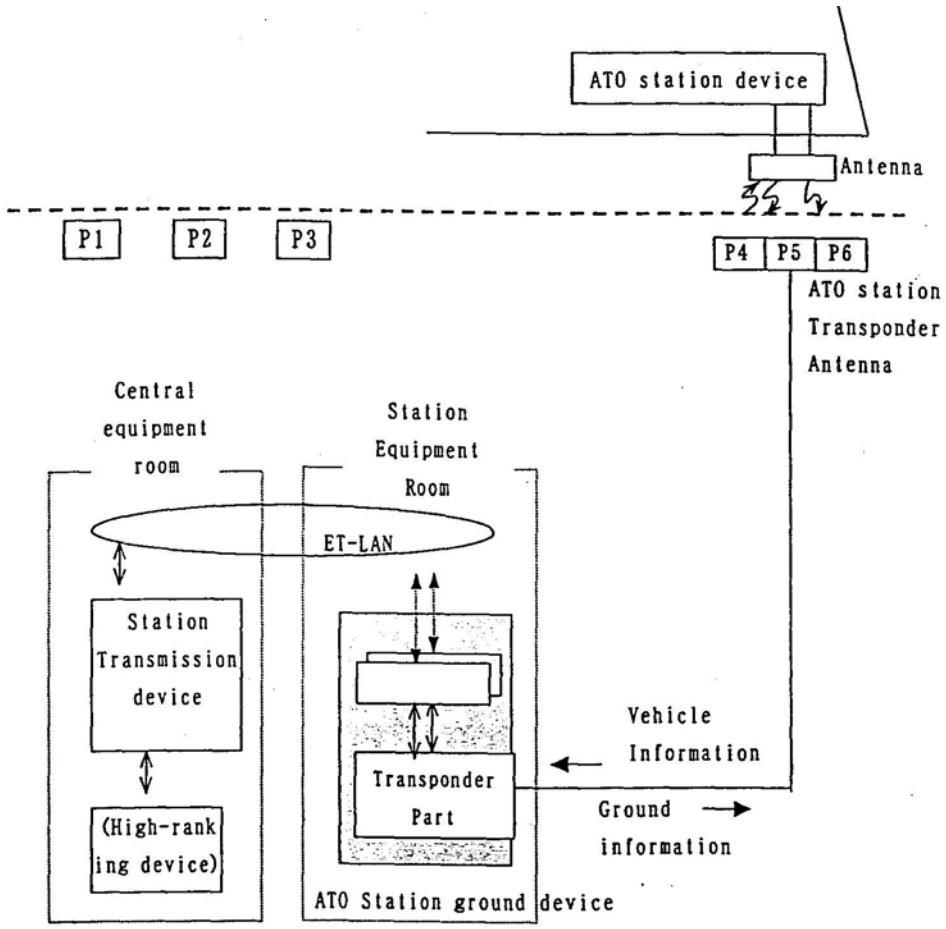

Figure 5-4 Composition of ATO Station Device

Using transponders, the ATO station wayside device communicates with the ATO control device via the ATO station on-board device. It performs the functions of confirmation of stopping at a fixed position, vehicle door control, platform door control, and departure control.

The ATO station transponder antenna is the wayside antenna, which sends and receives information necessary for station control.

The ATO station wayside device performs the functions of confirmation of stopping at fixed position, door control and departure control by the software logic with an electronic terminal.

The departure inspection of the door opening control etc. and the departure permission control are done in the delivery point. When the train stops at a passenger station, data is transmitted by the ATO station transponder between the train and the wayside.

The station transmission device transfers information with the ATC/TD device, the electronic interlocking device, and the operation management device.

The Station Transmission Device provides the interface between the ATO station devices installed in each passenger station equipment room and the main control equipment in Central Control. It is connected to the ATO station devices via a fiber optic network.

5.3.1.3 ATO Data Communication Device

The ATO data communication on-board device is composed of dual channel transmitter receiver (TR), a communication controller, a power supply, and an ATO data communication antenna. The reception is performed in the parallel mode and the transmission is by a master channel with a slave channel in standby.

The information between the ATO data communication central device in Central Control and the vehicle is sent and received by the serial data transmission of the polling selection method.

ATO communication on-board device receives train control status and the condition of other on-board equipment, and transmits the information to Central Control. It also receives the control information from central control, and distributes it to other on-board equipment.

The ATO data communication antenna sends and receives the high frequency signal through electromagnetic induction from the ATO data communication loops constructed along the guideway.

The ATO data communication on-board device consists of the transmitter/receiver (TR), the communication controller, and the power supply. It has the following characteristics:

Transmission method: close coupling inductive radio
Communication protocol: full duplex and polling selection
Modulation method: FSK modulation
Transmission speed: 1200bps
Synchronization: synchronous type with flag
Carrier frequency: 185.0kHz (wayside to train) 245.0kHz (train to wayside)
Redundancy: Dual with hot-standby

5.3.2 Automatic Train Protection

The automatic train protection system (ATP) is composed of the wayside and on-board vehicle devices.

The wayside device controls the speed of the train by continuously transmitting a speed signal to the train via the ATP/TD loop installed in the center of the guideway.

An antenna mounted on the train receives these electromagnetic signals and transmits them to a device on the car, which de-modulates the ATP signal, and sends the speed limitation information to the ATP controller.

Figure 5-5 shows a block diagram schematic of the entire ATP system.

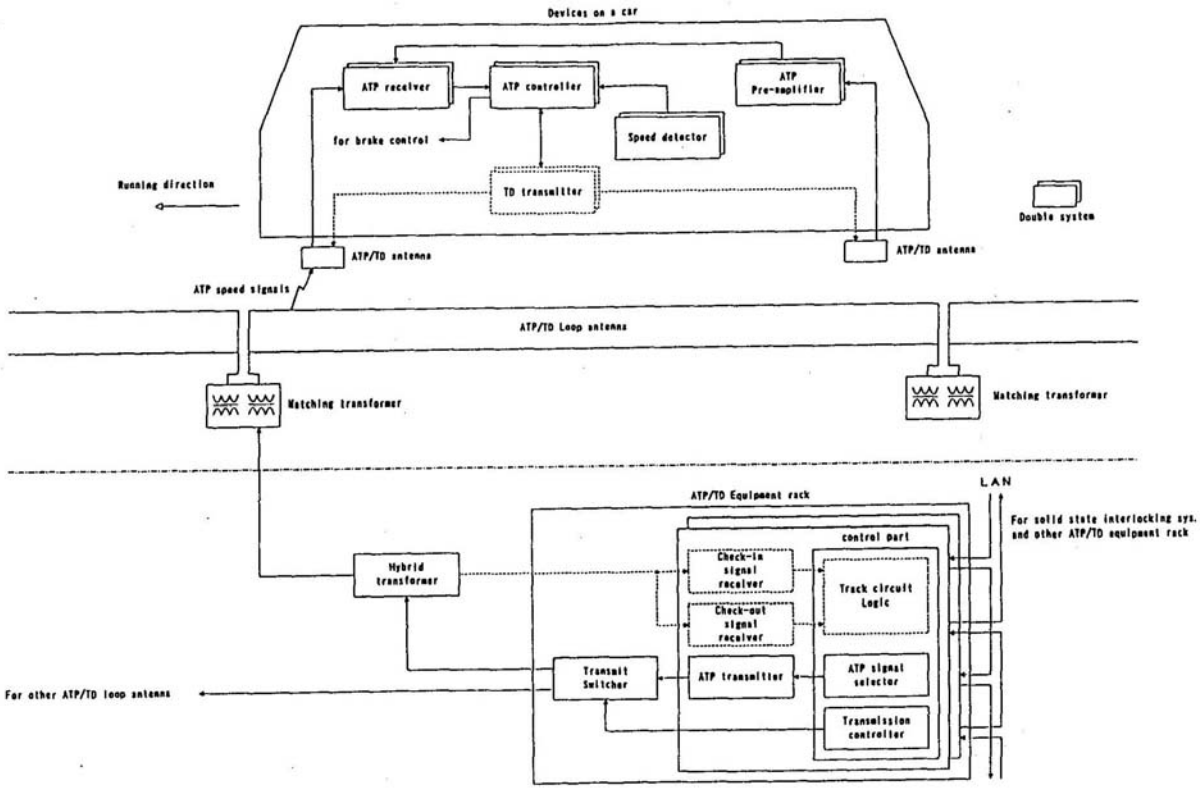

Figure 5-5 Composition of the Entire ATP System

5.3.2.1 Wayside Device

The ATP signal wave consists of a 20 kHz carrier and is modulated by square wave signal (amplified modulation). The relationship of the modulation frequencies to classes of aspect and the subsequent resultant actions are shown in Table 1.

The ATP speed limit signal is selected in the logic part of the ATP/TD. This signal corresponds to the train position from the train detection device, the route from interlocking device and the railway track conditions (curve part and divergence part), etc. The signal is transmitted to the ATP/TD loop installed on the guideway via matching transformers and the transmission cable. There is redundancy in that there is a duplicate set of all equipment in hot standby available for immediate switch over if the primary equipment breaks down.

Table 5-1 Classes of Aspect and Modulation Frequency

Classes of aspect	Modulation wave Frequency	Action			
		Clear Signal	Cab signal	Usage	Braking type
100 signal	10 Hz	Green	100 km/h	Maximum speed limitation	Full service braking
85 signal	13 Hz	G	85 km/h	Curve speed limitation	Full service braking
75 signal	16 Hz	G	75 km/h	Curve speed limitation	Full service braking
65 signal	19 Hz	G	65 km/h	Curve speed limitation	Full service braking
60 signal	23 Hz	G	60 km/h	Curve speed limitation	Full service braking
55 signal	28 Hz	G	55 km/h	Curve speed limitation	Full service braking
45 signal	35 Hz	G	45 km/h	Curve speed limitation	Full service braking
40 signal	42 Hz	G	40 km/h	Curve speed limitation	Full service braking
30 signal	54 Hz	G	30 km/h	Curve speed limitation	Full service braking
25 signal	64 Hz	G	25 km/h	Speed limitation at switch Speed limitation in maintenance depot.	Full service braking
ORP25 signal	72 Hz	Red	ORP25	Speed limitation for over-run protection	Emergency braking
10 signal	77 Hz	G	10 km/h	Speed limitation for sidings	Full service braking
01 signal	82 Hz	R	0 km/h	Stop	Full service braking
01TB signal	89 Hz	R	0 km/h	Stop (for direction change)	Full service braking
02 signal	No signal	—	0 km/h	Absolute stop	Emergency braking

5.3.2.2 On-board Device

The on-board ATP devices are comprised of the reception antenna, the ATP receiver, the ATP pre-amplifier, the speed detector, and the ATP controller.

The ATP signal is received from the ATP/TD loop by the antenna via electromagnetic induction. The ATP signal wave is de-modulated by the ATP receiver, and then transmitted to the ATP controller where they are compared to the speed signal output from the speed detector. The train speed is automatically reduced if it exceeds the speed limit.

The following describes each element:

(1) Reception antenna – The antenna is installed under the car. There are two, one mounted on each end. It receives signals from the ATP/TD loops in each block by electromagnetic induction.

(2) ATP receiver - The ATP receiver takes the signal from the antenna that in the front of the train (based upon direction of travel). This signal is de-modulated through the filter, 10-89Hz is selected, and amplified, and the ATP signal to each modulation wave is output. Then a lower speed priority circuit selects this ATP signal and transmits it to the cab signal and the ATP controller, and the aspect change chime is made to work.

(3) ATP pre-amplifier - The signal input from the rear antenna is amplified, and the signal is transmitted to the ATP receiver.

(4) Speed detector - The speed detector generates the speed pulse proportional to the speed of the train.

(5) ATP controller - The speed pulses from the ATP speed signal and the speed detector are continuously compared, and if the latter becomes larger than the former, the ATP controller outputs the brake command.

(6) Cab signal – For manual operation if required, the signal aspect corresponding to the ATP signal that the train is receiving is displayed, and drive information is displayed.

(7) ATP change-over switch - There is an ATP change-over switch as part of the vehicle manual control console, and it has the following five positions:

- "ATP ARM" Position - The ATP change-over switch is set to the position of "ATP ARM" and the train is operated using the cab signal of ATP device.
- "ATP FIXED SPEED" Position - The speed is checked at 20 km/h additions. This makes the manual operation possible regardless of the ATP signal, and the ATP change-over switch is set to the position of "ATP FIX-SPEED". At this time, the cab signal is not lit.
- "ATP DISARM" Position – The ATP device is opened. This enables the train to be driven at the maximum speed allowed according to the operating rules. At this time, the cab signal is not lit.

- "ATP/TD DISARM" Position - The ATP and the TD devices are opened. This enables the train to be driven at the maximum speed allowed according to the operating rules. At this time, the cab signal is not lit.
- "Stock" Position - The drive switch is set to the position of "Stock" when manually driving it to the maintenance and storage area. At this time, the cab signal is not lit.

(8) Warning sound – A warning sound is made when the signal aspect is changed.

5.3.2.3. ATP Functions

A. Signals 100 - 10
When any of the signals ranging from 100 to 10 as shown in Table 1 are received, full service braking is initiated when the train speed exceeds the limited speed. Braking is released when train speed decreases to below the limited speed.

B. Signal 01
Full service braking is initiated acts when the train receives a 01 signal. Braking will not be released until ATP signal changes.

C. Signal 02
Emergency braking in initiated acts when the train receives an 02 signal. In this case, the emergency braking will not be released until the ATP change-over switch is changed to "ATP DISARM" position after the train stops.

D. Train detection device is failed - The emergency brake is applied when the train detection device is failed. In this case, the emergency brake will not be released until the ATP change-over switch is changed to "ATP/TD DISARM" position after the train stops.

E. ATP wayside equipment is failed - The emergency brake is released when the ATP change-over switch is changed to "ATP FIX-SPEED" position. The train could be operated with fixed limitation speed.

5.3.3 Automatic Train Supervision

The ATS subsystem manages the train operations on main line and yard. It performs the function of automatic system operation by interfacing with the PTC device, the solid-state interlocking device, the ATO data communication device, ATC/TD device, and the ATO station device. In the normal operation mode, the route control, the train control, and the passenger guidance control according to the train operation are automatically performed. This is based upon the operation plan that is set beforehand. The ATS also displays the status of these functions. In an emergency operation mode, information is presented so that temporary processing such as departure control of the train may be automatically performed, or the central control dispatcher can initiate actions by using the man-machine interface. All actions are recorded in detail.

An Ethernet LAN connects the Programmed Train Control (PTC) device with the operation adjustment computer that is part of the man-machine interface. Each external interfacing device, such as solid-state interlocking device, ATC/TD device, station transmission device, is connected

using an optical fiber network via interface rack. It is connected to the ATO data communication device using serial data interface.

Figure 5-6 shows a schematic of the ATS subsystem.

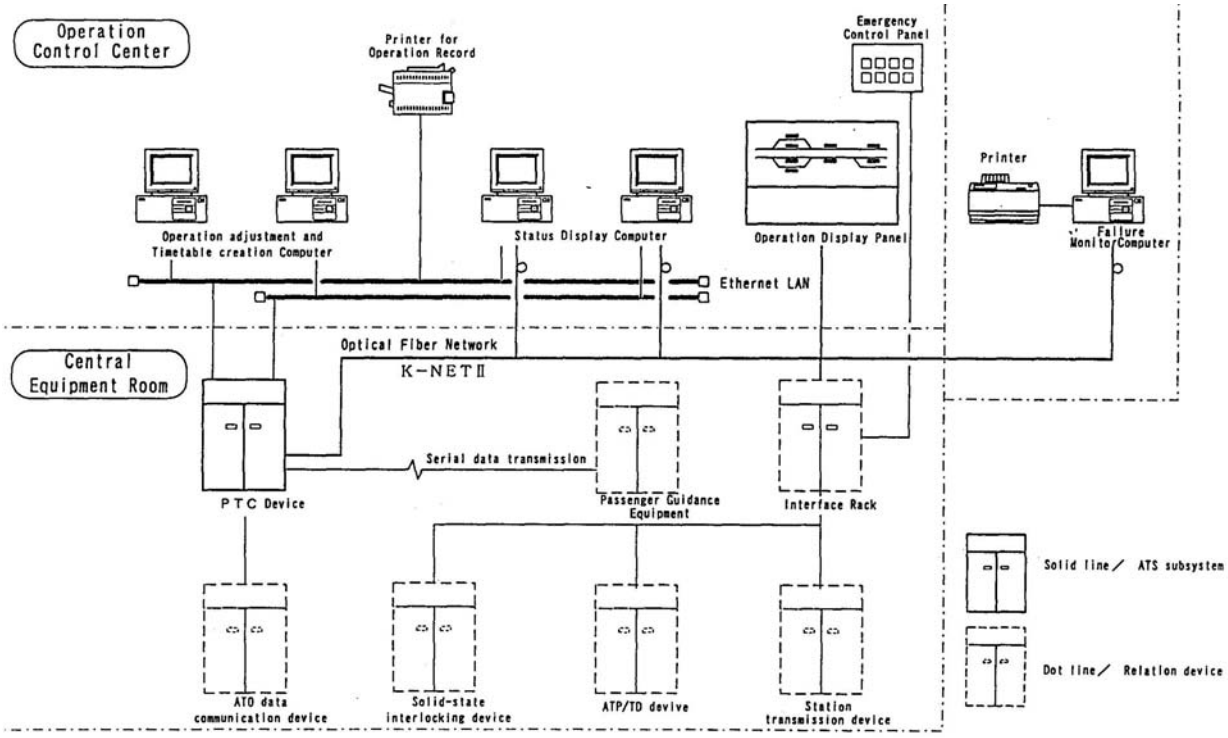

Figure 5- 6 Composition of ATS Substation

5.3.3.1 Operations Modes

There are two Modes of operation the Programmed Train Control Mode (PTC) and the Manual Mode. In the PTC mode, the route existing in the working timetable is automatically run based on train tracking information. In the Manual mode, the route is controlled by the manual operation of the dispatcher.

<u>Functions</u>

(1) The Operations Plan is the function that relates to the processing of the working timetable, which is the basis of running the system. The PTC device and the Operational Adjustment Computer control the system operation plan. The operation plan consists of:

a. The working timetable management function, which registers the original timetable and any changes to it.

b. The timetable creation function is where the basic timetable and the working timetable are developed.

c. The working timetable adjustment function makes any necessary adjustments such as the addition or deletion of a train, change in departure times, etc.

d. The timetable check function is a reality check to determine if a newly created timetable is feasible.

(2) Traffic control is the function that controls the trains. It uses the information from the working timetable and the operation plan. It performs the following actions:

a. Route control - the setting, confirmation, and restoration of routes

b. Train control while in manual mode, such as passenger information displays, departure control, and temporary speed limitations.

c. Transmit information to passenger information displays.

d. Control of the trains

(3) Running surveillance provides the information necessary for the traffic control function to operate by observing whether or not the train is running according to the working timetable. The actions that it performs are:

a. Train tracking - The train position and the train number based on train detection information from the ATC/TD device are tracked and monitored from the time it leaves the maintenance and storage facility throughout its revenue operational cycle. The running control is done based on this train positional information.

b. Operation disturbance watch - The train is checked as to whether or not it is operating according to the working timetable. When an operational disturbance occurs such that a train will be delayed from completing its route, the appropriate information necessary for operational adjustment is offered.

(4) Operational adjustment is the function that attempts to return the system operations to normal after the occurrence of a disturbance. The operation adjustment is based upon information received from the operation disturbance watch function and the actions of the central control dispatcher. The main function is as follows.

a. Automatic operation adjustment - The adjustment of the station dwell time and the departure order change of the terminal station are automatically accomplished.

b. Manual operation arrangement - Any change is performed by the actions of the central control dispatcher.

(5) Status watch is the function that monitors the status of the train and the wayside equipment, and transmits this information to the PTC device. The ATS subsystem gathers the information necessary to ensure the safety and security of the system, and the information necessary for the recovery after a disturbance. There are two main functions.

a. Train status watch monitors and manages the status of all trains.

b. Signal equipment status watch monitors and manages the wayside equipment.

(6) Operation record is the function of recording of the running situation of the trains including arrival and departure times, the running results, the status of the wayside equipment, abnormality or failure information, the operational inputs from the central control dispatcher. This information is gathered and stored at central control for record keeping as well as data analysis purposes.

5.3.4 Train Detection

The train detection function transfers information from the transmitter on the train to ATC/TD loop that is part of each track circuit installed in the center of the guideway. The train detection device uses a consecutive check-in checkout method to detect the existence of the train. The ATC/TD loop at each track circuit block uses the same transmission line as the ATC device.

Types of information and their frequency of transmission

(1) Check-in signal - The check-in signal is a continuous wave and is transmitted from the head end of the train.

(2) Checkout signal - The checkout signal is transmitted from the tail end of the train and is a square wave amplitude modulation wave.

(3) Check signal - The square wave amplitude modulation wave is used as a check signal for the check-in reception system. This signal also checks for disconnection of the ATC/TD loop along the wayside.

(4) Frequency and modulation method - Table 2 shows these information, frequency, and summary of the modulation method.

Table 5-2 Type and Frequency of Information

Type	Usage	Modulation method	Carrier Frequency	Modulation Frequency
Check-in signal	Check-in	No modulation	15.0 kHz	None
Checkout signal	Checkout	Square wave Amplitude modulation	11.8 kHz	35 Hz
Check signal	Check	〃	14.92 kHz	19 Hz

On-board Equipment

Figure 5-7 shows the composition of the on-board equipment. The check-in signal and the checkout signal shown in Table 2 of the train are always transmitted. The end of the car that transmits each signal is based upon the direction of travel. The check in signal is always transmitted from the head end of the vehicle.

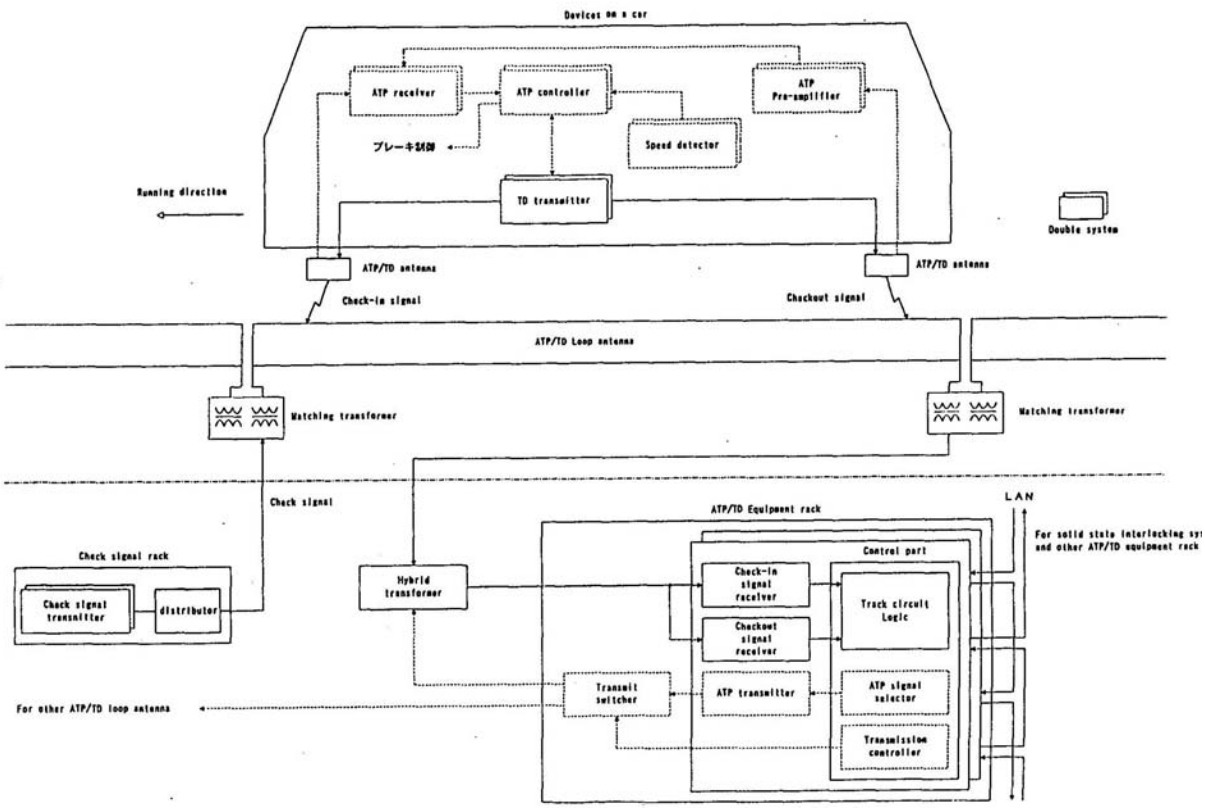

Figure 5 - 7 Composition of the Entire TD Device

The elements of the on-board system are:

(1) TD transmitter

The transmitter sends either the check-in or the checkout signal wave as shown in Table 2 in accordance with the train's direction of travel. The antenna receives the second output for the current detection of the antenna coil when the check-in signal is transmitted. This unit is redundant, when the main unit fails the backup immediately takes over.

(2) Transmission antenna

The transmission output of the check-in signal and the checkout signal is transmitted to the ATC/TD loop of the ground construction by the electromagnetic induction action.

<u>Wayside Equipment</u>

Figure 5-7 also shows the composition of the wayside equipment. The wayside equipment is composed of the check-in checkout reception part that receives the check-in and checkout signal from the ATC/TD loop divided at track circuit block, the logic part of block where the existence of the train is detected, and the check signal transmission part.

(1) Check signal transmission part

The check signal shown in Table 2 is transmitted to the ATC/TD loop in each block through the distributor. This signal is transmitted to the check-in reception part, and always checked including the disconnection detection of the ATC/TD loop. This is redundant.

(2) Check-in reception part

The check-in relay is energized according to the check signal input via the check signal transmission part, the distributor, and the ATC/TD loop. Because this receiver uses the suppression method, the check signal is suppressed in the reception part when the train goes into a track block section. If the check-in signal from the train is received, the existence of the train is detected. This is also redundant.

(3) Checkout reception part

When the tail part of the train enters the track block section, the checkout reception part receives the checkout signal. It is always assumed to be an open circuit. The like all the other parts are redundant.

(4) Logic part of the track block

The software within the CPU shared with the ATC aspect selection and the transmission control part calculates the logic of each track block. It is composed of check-in relay (IN), checkout relay (OUT), and block relay (TR). The block relay is reset and held by resetting the check-in relay or setting the checkout relay. This then assumes the existence of a train. If the train moves to the next forward block completely, the block relay is returned to set (the train none) by resetting the block relay of forward block forward (forward TR) and setting the checkout relay of forward block (forward OUT). Thus the existence of the train is continuously detected.

5.3.5 Speed Detection Device (VEL)

The speed detection device receives a three-phase pulse from the speed detection loop installed in the center of the guideway, detects the direction and speed and sends this information in the form of a speed pulse and the direction of the train to each device on the car. This speed detection device is a no-contact type design.

Figure 5-8 shows the system configuration.

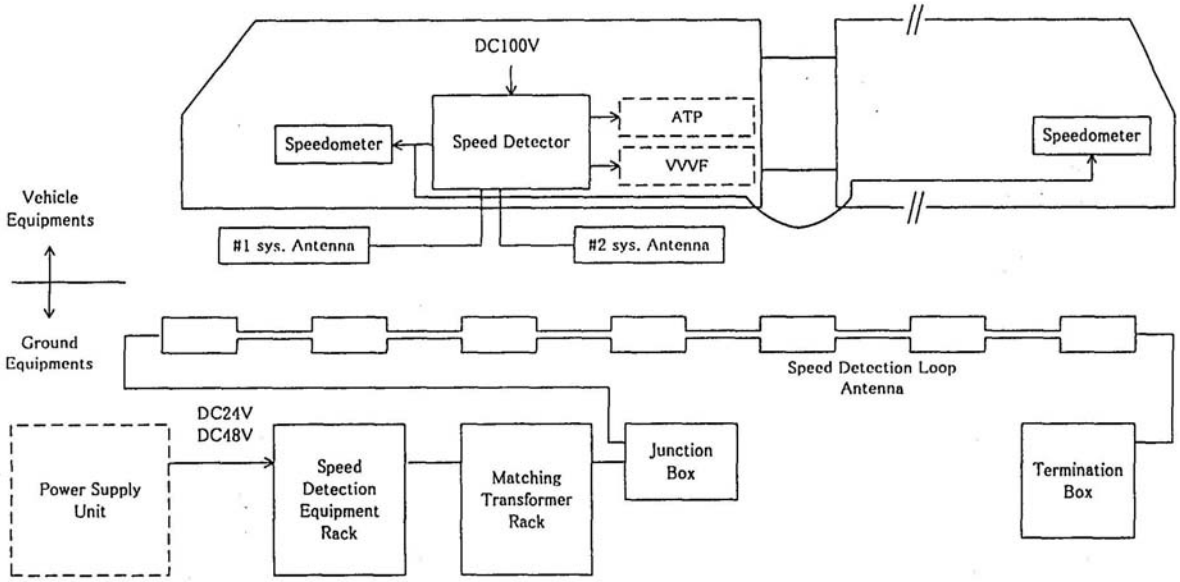

Figure 5-8 System Configuration Chart

Wayside equipment: The wayside equipment is composed of the speed detection equipment rack that generates and amplifies the signal for the speed detection, matching transformer rack and the speed detection loop constructed at the center of guideway. The oscillation frequency of 27 kHz is amplified to a prescribed level, and is transmitted to the speed detection loop. This is redundant. The speed detection loop installed in the center of the guideway has opening and closing sections every 30 cm as shown in **Figure 5-9**. This constantly changing signal is sent to the speed detection device on the car.

On-Board equipment: A device on the car calculates the running speed of the vehicle from the change in the speed signal transmitted from the wayside, and sends this speed information to each device on the car.

The speed detection antenna is installed opposite to the speed detection loop installed in the guideway. Three independent coils are molded with the FRP resin to form the antenna. **Figure 5-10** shows the coil arrangement of the antenna.

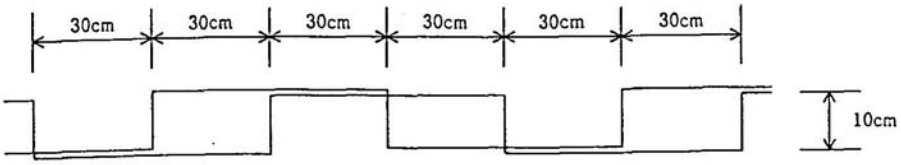

Figure 5-9 Power of Ground Loop Antenna

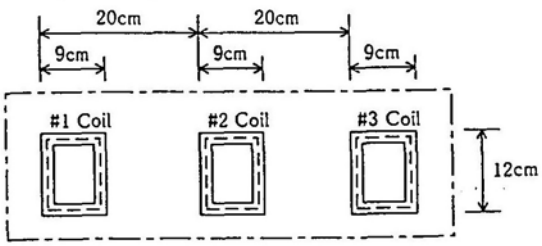

Figure 5-10 Antenna on the Car Coil Arrangement

The speed detector processes information from the wayside received through the antenna, and sends the speed signal to each device. This device is redundant.

Operation: Three kinds of reception signals (reception information 1-3) are obtained from the position of antenna's three coils and the speed detection loop. **Figure 5-11** shows this relationship. The antenna coils detect a level change when the train passes over an opening and closing part of the speed detection loop. Then the reception information (1-3) is computed for speed detection.

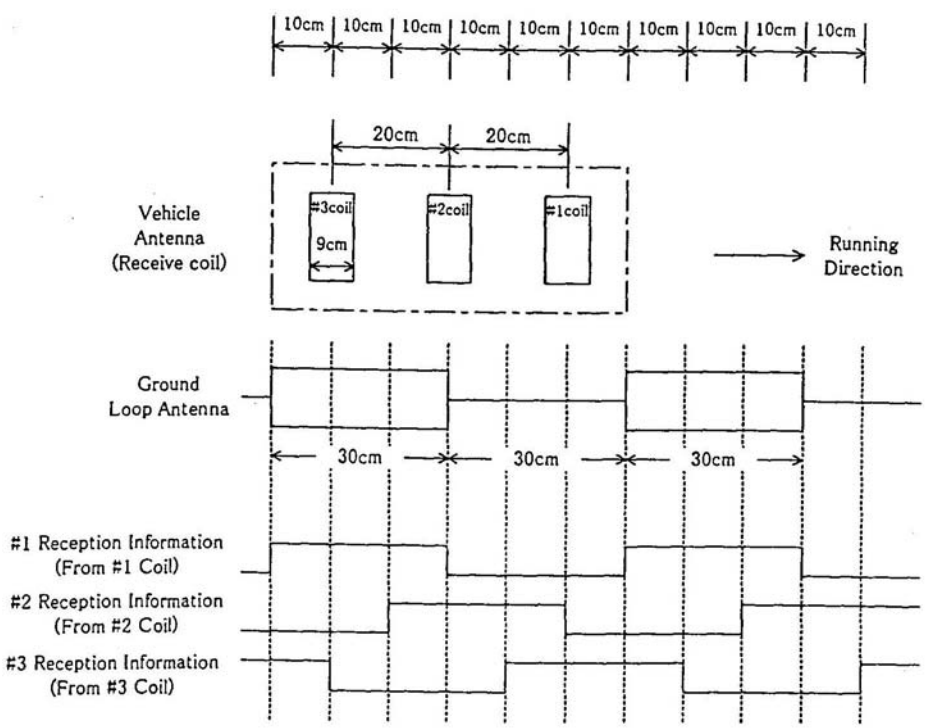

Figure 5-11 Relation between Loop antenna and Antenna Coil on the Car

(1) From stop to 1.2 km/h – The time from the leading edge or falling edge of a reception to the leading edge or falling edge of the next reception is measured as shown in **Figure 5-11** and the speed is calculated by factoring in the 10cm between these receptions.

(2) From 1.2 to 3.6 km/h – The time from the leading edge of a reception to the leading edge of the next reception is measured as shown in **Figure 5-11**, and the speed is calculated by factoring in the 20cm between these receptions.

(3) Above 3.6 km/h – The time from the leading edge to next leading edge of a reception is measured as shown in **Figure 5-11**, and the speed is calculated by factoring in the 60cm between these receptions.

5.3.6 Comparison and Recommendations

The above description of the ATC system is for the automatic train control system that will be installed in the Tobu-Kyuryo Line presently being implemented in Nagoya, Aichi Prefecture. The Kyosan Electric Manufacturing Company will supply this ATC system. Kyosan has significant experience in train control and automated train control not only in Japan but internationally as well. There latest installation is the automatic train control system for the Mitsubishi APM in the new Hong Kong Airport.

The Chubu-HSST vehicles/system can be made to operate under the control of any modern train control system that could be supplied from any of the myriad of suppliers worldwide. Most of these potential suppliers have provided automated train control systems in the U.S. before and are well aware of the codes, standards, and general requirements that exist. These suppliers are fully capable of providing automatic train control systems that will comply with all of these requirements and are compatible with the Chubu-HSST vehicles etc. The interfaces with the propulsion systems, door control systems, etc for the Chubu HSST system are not unique and will not present any difficulties to any of the automatic train control suppliers.

Because of this, there are no concerns with the applicability of an ATC system for the Chubu-HSST Maglev system in the U.S. marketplace.

5.4 ALTERNATIVE BRAKING SYSTEMS

This Section will describe the existing mechanical braking system that is used in conjunction with the electrical braking system to bring the CHSST vehicle to a complete stop. The mechanical braking system is used in both normal and emergency conditions.

Service braking will be initiated under the following conditions:

- ATP commands service braking
- Pressure drops of either the primary or standby hydraulic accumulator
- Rails or the PSU
- Levitation failure of any module

Emergency braking will be initiated when any of the following occurs:

- Emergency brake commands from the ATP
- Failure of the ATP system
- Failure of the velocity detection system;
- Detection of a train reverse running
- Disconnection of one or more vehicles
- Detection of a door opening at a vehicle speed in excess of 5km/h (3.1 mph)
- Failure of the TIMS

The CHSST vehicle braking system incorporates two independent subsystems, an electric LIM brake and a mechanical hydraulic brake.

In normal operations, the electrical braking subsystem provides regenerative and reverse phase (plugging) braking under normal operating conditions from high speeds to speeds as low as 5 km/hr (3.1 mph). At this speed a transition takes place and the hydraulic braking subsystem is used to bring the vehicle to a complete stop and hold the vehicle in place.

In emergency situations, the hydraulic brake subsystem is employed at any vehicle speed. This subsystem is sized to handle the full emergency braking needs of the vehicle and assumes that it receives no braking assistance from the electric braking subsystem in these emergency conditions.

There are sensors incorporated into the air bag suspension system to sense the weight of the vehicle. This information is then fed back to the hydraulic braking system to control the rate of deceleration in the service braking mode.

5.4.1 Electrical Braking Subsystem

The electrical braking subsystem has been discussed in detail in the Levitation/ Propulsion Section (Section 5.2.4) of this chapter, and will not be repeated here.

5.4.2 Hydraulic Braking Subsystem

The Hydraulic Braking Subsystem consists of three elements: the hydraulic power unit, the brake pressure controls and the brake actuators. These subsystems are installed on each vehicle and the brake actuators are installed on six of the ten modules on each vehicle. Each vehicle is independent of the others in the train consist.

Hydraulic Power Unit

The hydraulic power unit consists primarily of the hydraulic pump, the primary and standby accumulator for redundancy, and the pressure switches. There is one pressure switch located at each accumulator line. The system is operated at a pressure of 210 kgf/cm2 (3,000 psi) and uses synthetic fire resistant fluid (Quinto lubric 822 series) as the hydraulic fluid.

Pressure switches are installed at the accumulators of the primary hydraulic system and standby hydraulic system of each car. If the pressure in either accumulator drops to 185 kgf/cm2 (2,630 psi) or less the hydraulic pump is energized to raise the pressure. When the pressure reaches 210 kgf/cm2 (3,000 psi) the pump stops.

The primary accumulator capacity is twice that necessary to bring a train from full speed to a complete stop. The standby accumulator is sized for one operation of stopping a train from full speed.

Brake Controls

The brake control schematic diagram is shown in **Figure 5-12**.

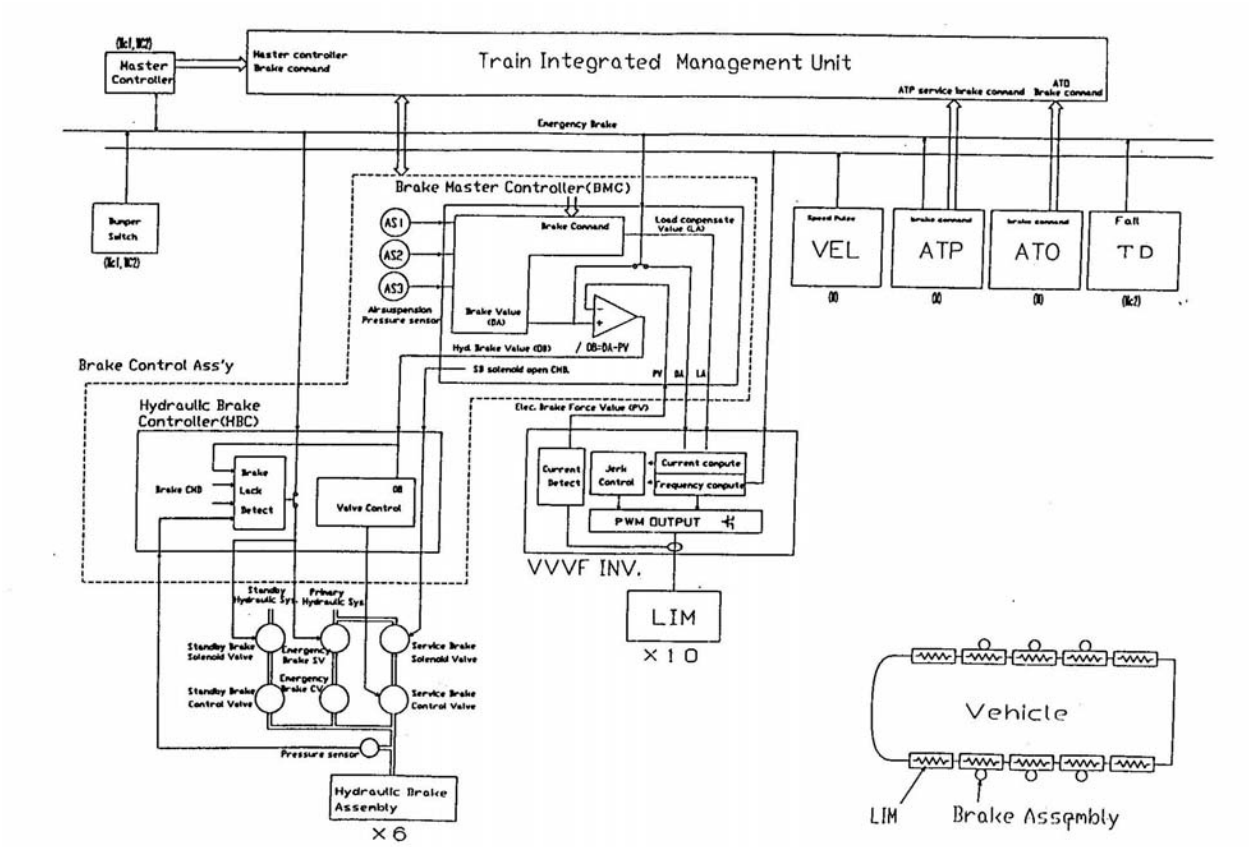

Figure 5-12 Brake Control Schematic

(1) Service braking

The service brake command can be initiated from either the manual brake command from master controller, ATO brake command from ATO, or the ATC Service brake command from ATC controller. This signal is sent to brake master controller (BMC) of the brake control unit via the TIMS. The TIMS similarly monitors the failed state of the equipment, and sends the automatic brake command to the BMC.

The signal from the three air suspension pressure sensors is averaged, and the load compensation is automatically corrected. The BMC then sends the braking value (DA) to the VVVF inverter. The VVVF inverter then initiates regenerative braking and reverses phase braking (plugging) with the linear motor.

The BMC then receives the electric brake force value (PV), which is the electric brake application force from the VVVF inverter. If the BMC computes insufficient braking force, it sends the hydraulic brake value (OB) that is the hydraulic brake force command, to hydraulic brake controller (HBC).

The service brake valve control amplifier then operates the service brake control valve and the hydraulic brake is operated by pressure corresponding to the required hydraulic brake value (OB).

The hydraulic brake controller (HBC) then compares the hydraulic brake value (OB) to the hydraulic pressure sensor, and if the vehicle is not braking within prescribed limits the emergency brake is applied.

(2) Emergency brake
The emergency brake command, which can emanate from a TD device failure or the ATP emergency brake command, activates the emergency brake solenoid valve directly via the hydraulic brake controller (HBC) of the vehicle. Also, the braking value (DA) to the VVVF device is disengaged, and electric braking is inhibited.

The emergency brake command remains fixed until the emergency brake reset is activated.

The emergency brake control valve incorporates the air suspension pressure directly, and the hydraulic brake is activated with automatic load compensation.

Brake Actuators
The hydraulic brake actuator is a mechanical friction brake. Its brake linings pinch the rail flange by the application of hydraulic pressure, thereby providing the required braking force.

5.4.3 Evaluations and Recommendations

The braking systems that have been discussed above were evaluated to determine if they are indeed the most effective for application to the vehicles in order of performance versus reliability, weight and spatial requirements. The concept of eliminating the hydraulic brake subsystem entirely was studied in an attempt to simplify the overall vehicle. This would also save significantly on weight and space on an already crowded vehicle and would also delete another subsystem from the required maintenance list.

Two alternative braking schemes were investigated. The first is the potential use of the landing skids, which are used as parking brakes in the current design. The modules have a coefficient of friction that ranges between 0.15 and 2.0 for the interface between the landing skid shoes and the rails. The maximum braking force that could be generated by the landing skid is limited by the coefficient of friction of the landing skid shoes. Varying the number of landing skids that would be allowed to contact the rails could control the braking rate. In the case of the 100L vehicle configured in a three-car train, there would be thirty levels of braking force that could be applied.

The other potential alternative that has been studied is to use the levitation magnets to provide braking forces. The magnet shoe that is installed on the magnet pole surface also has a coefficient of friction that ranges between 0.15 and 0.2. Braking forces could be applied to the vehicle when the levitation magnets attract to the degree that the magnets cling to the rail. Adjusting the current in the electromagnets could control the braking force.

It was determined that the landing skid braking scheme has the most potential because:

- The landing skid brakes are fail safe – they work in case of a power failure;
- The allowable wear thickness of the skid is much larger that that of the magnet shoe; and
- The landing skid shoe is much larger that that of the magnet, reducing the overall wear and extending the shoe's life.

In order to properly evaluate the potential of using the landing skids as part of the "normal" vehicle braking system and eliminate the hydraulic brakes, a number of further studies and tests are necessary. Some of these are:

1. Maximum deceleration rate – A new material for the skid shoes may be necessary in order to achieve the 0.36g requirement of the FTA.
2. There is a potential of the vehicle "hopping" when initially dropping onto the skids. This must be controlled or eliminated in order to better control the braking rate.
3. The emergency roller system must be redesigned in order to achieve the benefit of eliminating all hydraulics on board the vehicle.
4. Develop another means of preventing the vehicle from rolling down a slope when on its emergency roller system.
5. Develop a means of evaluating and incorporating the time delay between activation of the skid brake command and the vehicle dropping onto the skids, into the braking profile.
6. Completion of the development of an optical velocity sensor that would provide more precise velocity data than the present IR cable.
7. Expand the range of application of the electrical braking in order to minimize the use of the landing skids. This means that electrical braking should be capable for the full stopping profile. With the more precise velocity information, it is felt that controlling the vehicle speed to zero and holding it at zero speed is achievable with electric brakes alone.
8. Decrease the noise that occurs when the landing skids are applied at high speed.
9. The magnetic guidance force is lost when all modules are turned off and all landing skids are deployed. This may impact ride quality.

The replacement of the hydraulic braking system with the use of the landing skids does indeed have possibilities. The potential benefits are significant, however there are still a number of issues that must be resolved with the electrical braking system as well as other subsystems. As presented above these have been identified, all that remains now is to do the work.

At this time, with no present funding available to advance these concepts, and in order to ensure proper performance and safety of the passengers, the hydraulic braking system as incorporated is still considered the best alternative for the Tobu-Kyuryo Line. Therefore, it is recommended that at least for now, the hydraulic braking system for the Chubu-HSST vehicle not be changed.

The hydraulic braking system as it presently exists satisfies all of the requirements that have been established for applicability in the U.S. It satisfies all of the appropriate codes and standards, does not pose any safety risks beyond those typical for mass transit systems, and operates efficiently, reliably, and is relatively easily maintainable.

5.5 ON-BOARD POWER / ENERGY EFFICIENCY

The vehicle on-board power system consists of the power collectors, the high voltage main circuit, the on-board power converter/inverter equipment, the input switch and the battery units. This system picks up the 1500 VDC from the wayside power rails, converts it to the appropriate voltage levels and distributes throughout the vehicle to the required equipment. It is shown schematically in **Figure 5-13**.

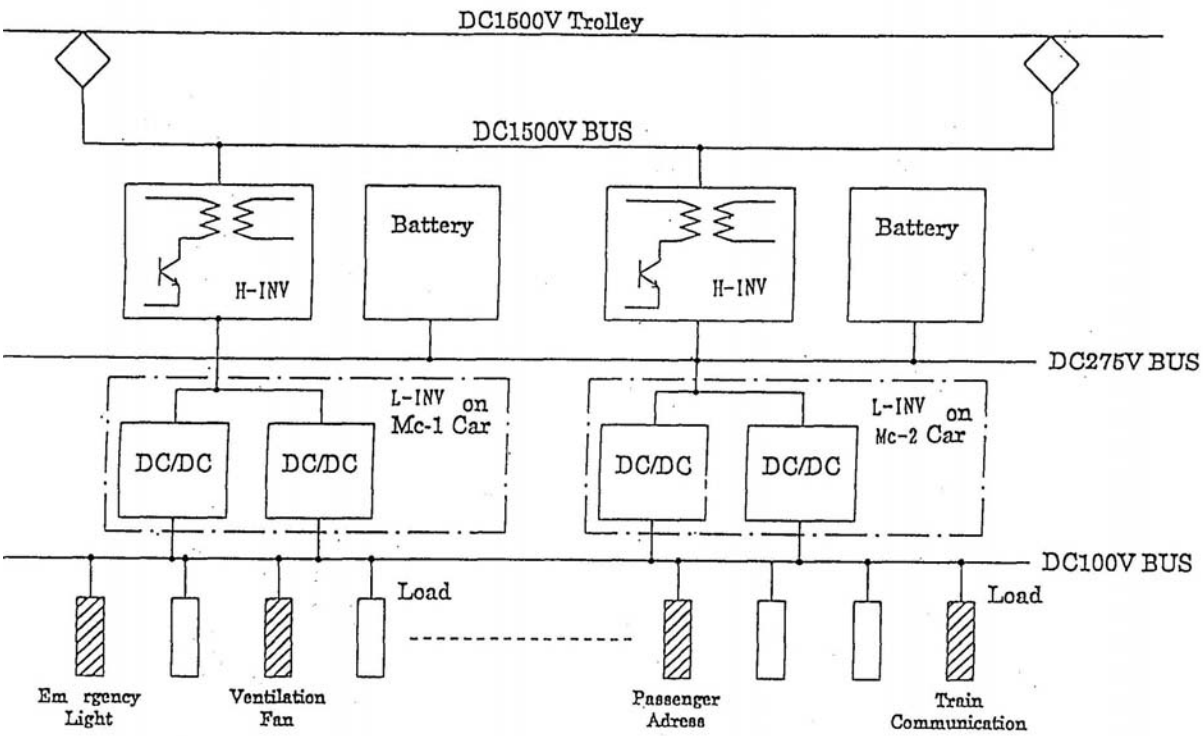

Figure 5-13 Schematic Diagram of Power Supply System on HSST-100L Train

5.5.1 Current Collector Unit

Each three-car train is equipped with 4 pairs of current collector units, one fore and aft on each side of the vehicle. This configuration ensures that there will be a continuous flow of 1500 VDC power to the vehicle. The spring-loaded collector shoes provide continuous contact with the power rails. They are rated 600A.

5.5.2 High Voltage Main Circuit

Once the 1500 VDC is on board the train it is delivered to the High Voltage Bus for distribution to the two Power Supply Units through disconnect switches for transformation and further distribution throughout the vehicles.

5.5.3 Power Supply Unit (PSU)

The power converter/inverter, which is also called the power Supply Unit (PSU), converts the high voltage (1500 VDC) that is picked up form the wayside via the power collectors in to three types of voltages for use by the different electrical equipment on-board the vehicles. The Main DC Power, 275 VDC, is used for levitation and air conditioning; DC power, 100 VDC, is used for the control and communications systems, and lighting; and the AC power – 100 VAC single phase 60 HZ is provided for, utility outlets and other general use.

The Main DC power unit converts 1500 VDC to 274 VDC via a high frequency transistor inverter with multiple stages The DC power units are 8.7 kW units that convert the 275 VDC to

100 VDC. The AC power is also generated from the 275VDC by a 2.6 kVA inverter that has a 100 VAC, single phase, 60 Hz quasi-sine wave.

There are two of these PSUs per three-car train.

5.5.4 Battery Unit

In order to maintain power during short interruptions and to allow the system to stop safely during a major power outage, a battery unit is provided. This unit is in line with the 275 VDC bus, thereby providing continuous power to all the on-board electrical loads.

Presently the battery unit consists of 198 cells and has a 20 Ampere-hour discharge rate. This provides enough capacity to levitate the train for 30 seconds, which is more than enough time to bring the train to a stop. It can also supply power to the emergency loads such as lighting and communications for approximately 30 minutes.

A means is provided for an external supply of 275 VDC to the trains while they are in the maintenance facility.

5.5.5 Evaluations and Recommendations

As described above, the present Chubu-HSST vehicles operate from a 1500 VDC distribution system. The possibility of operating from 750 VDC, which is more common in the U.S. was investigated. With the present configuration, the output voltage of the inverter rises from 400 to 1100 VDC. In order to utilize a power rail voltage of 750 VDC, a number of design changes would have to be implemented in order to obtain the same vehicle performance. One option would be for the LIMs to be redesigned. Another approach could be to change the interconnection schemes of the LIMs from two parallel chains of five in series, to five parallel chains of two in series. This approach may increase the need for inverters, with its attendant space, weight, and cost implications. In addition to the changes required in the LIMs, there are other less significant changes that would result in the decrease in power distribution voltage. For example, with a decrease in voltage, there would be a correspondingly increase in current drawn by the LIMs. This would result in an increase in the size of the wires along the guideway and on-board the vehicles. This may also result in an increase in the number of power collector shoes as well.

Although 750 VDC is a more prevalent distribution voltage in the U.S., there are applications where 1500 VDC is used. Traction power substation equipment at this higher voltage is readily available from a number of sources. Therefore, it is recommended that at least for now, the power distribution voltage for the Chubu-HSST not be changed.

The Onboard Power system as it presently exists satisfies all of the requirements that have been established for applicability in the U.S. It satisfies all of the appropriate codes and standards, does not pose any safety risks beyond those typical for mass transit systems, and operates efficiently, reliably, and is easily maintainable.

5.6 ELECTROMAGNETIC INTERFERENCE AND ELECTROMAGNETIC FIELDS

5.6.1 Electromagnetic Interference (EMI)

Electromagnetic interference (EMI) is the disruption of operation of an electronic device when it is in the vicinity of an electromagnetic field in the radio frequency (RF) spectrum (from very low frequency to the extremely high frequency in the microwave spectrum) that is caused by another electronic device. Under this condition equipment and systems in their normal environment interfere with one another. In recent years of test track operations in Nagoya, Japan, there has been no reported EMI problem among system elements of the CHSST system such as the onboard electrical equipments, trolley feeding system and Inductive Radio system, during operation of the HSST 100 vehicles (100S and 100L).

Noise margin tests conducted on the HSST 100S vehicle train control and the wayside signal system and documented in the 1993 Chapter on Economic Feasibility Study of Magnetic Levitation Linear Motor Car for Urban Transportation (Ref. 1) indicated that with vehicle accelerating, coasting and decelerating, the noise margin test results of the car borne and wayside ATC system were acceptable. There was no difference in noise level due to variations in vehicle running and grounding form in empty and fully loaded condition. However, on the car borne speed detection system, noise increased at power running and braking.

The noise levels documented for the HSST 100S in the 1993 chapter were as follows:
Speed detection/ pattern generating system: -38 dBm (min. operating signal level is -22 dBm)
ATM transponder system: -49 dBv (min. operating signal level is -34 dBv)

The measured noise values afford margins of at least 15 dB of noise below the minimum operating signal levels. For the Speed Detection System, the noise level margin is acceptable and meets the design signal-to-noise-level ratio of 10 dB (i.e., signal greater than noise by approximately 3 times) and on the Automatic Train Stop (ATS) system, the noise margin measurements meet the required signal-to-noise-level ratio of 12 dB (i.e., signal greater than noise by approximately 4 times), which maintains a bit error probability ratio of 10^{-5}.

On the wayside train control and signal system, during the train detection system tests, there was no difference in noise level due to differences in vehicle running and grounding form in empty and fully loaded condition. The noise level on the wayside train detection system is below -60 dBm (min. operating signal level is -47 dBm), which affords a margin of at least 13 dB, and meets the design signal/ noise level ratio of 10 dB. The noise level on the wayside transponder system was initially -31 dBv (min. operating signal level is -47 dBm) at power running both in empty and fully loaded conditions. However, it was determined that the operational scenario for the transmission is to be performed under noiseless condition when the vehicle is stopped on ground group line, so, it was not considered an area of concern. It was also found that the noise affecting the wayside transponder system originated in a transmission line of the car borne VVVF inverter main circuit. Shielding the cable, installing ferrite core on the line and repositioning the signal antenna remedied this.

Additionally, the signal reception on board the HSST 100S vehicle from the wayside under various guideway alignments and geometrical conditions (such as 8° Super Elevation, running on switching section and on 25m-radius curve) was confirmed during the test program and

documented in the 1993 Feasibility Study chapter. The following reception levels were confirmed, affording the following margins above the minimum operating signal level.

Train detection system:	12 dB
Speed detection/ pattern generating system:	6 dB
Automatic Train Stop (ATS)- Car borne:	8 dB
Automatic Train Stop (ATS)- Wayside:	7 dB

All equipment devices, therefore, maintain a signal reception of at least 6 dB margin above (i.e., approximately twice) the minimum operating signal levels, which are necessary for stable operation of the receiving sections. Initially, there were drop-offs and attenuation in reception levels at connections of switching section and pattern belt, but they were improved by modifying the pattern belt installation method, followed up by testing to confirm normal reception levels.

5.6.1.1 Additional U.S. Standards/ Test Requirements

In a U.S. application of the CHSST 100L vehicle, the maglev system (wayside and car-borne) will need to be tested further to verify compliance with additional requirements currently specified by the following standards in the following areas, relevant to U.S. transit systems:

(1) Electromagnetic Background

i. ASCE APM Standard Part 1 requires the transit system to operate in environment at a site in accordance w/ MIL-STD-461D – Requirements for the Control of Electromagnetic Emission and Susceptibility.
ii. IEEE 1474.1 - 1999: Institute of Electrical and Electronics Engineers, Standard for Communications–Based Train Control (CBTC) Performance and Functional Requirements, requires all wayside and train borne equipment to be electromagnetically compatible within themselves, with all trains and train equipment in operation within the system-territory, and with all other electrical and electronic equipment along the right of way, including but not limited to, traction power supply/ controls, voice communication, and other signaling and telemetry systems.

(2) Electromagnetic Radiation:

i. Both ASCE APM Standard Part 1 and IEEE 1474.1 - 1999 Standard for CBTC Performance require the system to be compatible with the environment: i.e., it must not produce emissions that interfere with normal operation of electromagnetic devices.
ii. APTA SS-E-010-98, Standard for the Development of an Electromagnetic Compatibility Plan and CENELEC PrEN 50121-4 specification: Railway applications - Electromagnetic compatibility -- Part 4: Emission and immunity of the signaling and telecommunications apparatus, both require to develop and implement an Electromagnetic Compatibility Control Plan to document a program for achieving and providing evidence of electromagnetic compatibility.
iii. FCC Rules and Regulations in CFR Title 47 Chapter 1, Part 90, Private Land Mobile Radio Services, subparts S and T; and the interference requirements defined in Title 47, Chapter 1, Part 15, Radio Frequency Devices, will need to be verified and tested in a U.S. application of the HSST 100 L vehicle.

5.6.1.2 Compliance of the 100L Vehicle with U.S. Standards in a U.S. Application

Current experience in Japan for the HSST 100S and 100L vehicles indicates that in a U.S. application of the 100L vehicle, compliance with the above EMI requirements will be achieved. In a U.S. application, verifying proper grounding, careful circuit layout, and shielding can further achieve high degree of protection against interference. To reduce interference, power cables and signal cables will be routed separately, preferably in shielded compartments. The signal cables will be of the twisted-pair shielded cable type as required. The shield conductor will be connected to the zero reference of the signal (ground) only once. The shield and the signal reference ground will be grounded at the same point. Circuit layout will avoid excessive crowding, long adjacent signal paths and unnecessary wire crossings.

5.6.2 Electromagnetic Fields (EMF)

5.6.2.1 Electric Fields

The measurements of electric field strength caused by the vehicle HSST 100S were conducted as part of the tests under the research program, commissioned by Aichi Prefecture from 1989 through 1993. The overall program studied the economic feasibility of the HSST-100 superconducting magnetic levitation linear motor car as an urban public transportation system. The purpose of the test was to measure the level of the electric wave noise as well as that of the environmental noise. As part of the test peak-envelope-detection was carried out at 3 measuring points:

- A: Under the power trolley at 1 m above ground.
- B: 10 m away from point A (away from the trolley), 1 m above ground.
- C: 20 m away from point A (away from the trolley), 1 m above ground.

The results measured in dB (relative to reference electric field of 1 microvolt per meter) indicate that at Point A (under the trolley, 1 m above ground), the electric field in the frequency range between 30 MHz and 90 MHz fluctuates from a baseline level of 50 dB, with the majority of the spikes caused by vehicle starts, measured under 65 dB. One spike at frequency range of 80 MHz produced an electric field of 85 dB (relative to reference electric field of 1 microvolt per meter). This maximum spike corresponds to an electric field level of $10^{[(85/20)-6]}$ V/m = 0.01778 V/m. The Threshold Limit Value (TLV) guideline for electric field in the radio frequency range between 30 MHz and 100 MHz, recommended by the American Conference of Governmental Industrial Hygienists (ACGIH) in 2001, (Ref. 2), is 61.4 V/m. The HSST 100S vehicle appears to meet this present-day TLV for electric fields in the range of 30 MHz to 90 MHz of the radio frequency, by several orders of magnitude.

The measurements of electric field at Point B [10 m away from point A (away from the trolley), 1 m above ground] for the 100S vehicle in the frequency range between 30 MHz and 90 MHz fluctuated from a lower a baseline level of 45 dB (equal to environmental noise in Japan), with the majority of the spikes, caused by vehicle starts, measured under 63 dB. One spike at frequency 80 MHz produced an electric field of 80 dB (relative to reference electric field of 1 microvolt per meter). This maximum spike, corresponds to an electric field of $10^{[(80/20)-6]}$ V/m = 0.01 V/m, which, again, is much lower than the ACGIH's recommended TLV of 61.4 V/m., by several orders of magnitude. There are no FTA requirements for limit values on electric fields in the radio frequency range (above 30 kHz).

No measurements of electric field are available for the CHSST 100L vehicle to compare against the FTA's AC electric fields requirements in the sub-radio frequency range for public and occupational allowable limits. CHSST states that there has been no need to measure AC electric field because the vehicle system has no AC high voltage circuits. The maximum voltage is 1500V DC. The FTA's requirements for AC electric field, public allowable are based on the ACGIH 1999 threshold limit values (TLV) and ICNIRP (International Commission on Non-Ionizing Radiation Protection), 1998. Public allowable limit is established based on persons with cardiac pacemakers and other implanted electronic devices. For persons with cardiac pacemakers, the permissible exposure is 1 kV/m and for all other persons of the general public the permissible exposure is 5 kV/m. There are no limiting factors that will preclude the CHSST 100L vehicle from meeting AC (50/60 Hz) electric field.

The FTA's requirements for AC electric field, occupational allowable, for a whole working day (8 hours), is based on the ACGIH 1999 threshold limit values (TLV). The permissible exposure limits in the sub-radio frequency ranges are as follows:

- From 0 Hz (DC) to 100 Hz = 25 kV/m Ceiling
- From 100 Hz to 4 kHz = 2,500 kV/m /Freq (Hz) Ceiling
- From 4 kHz to 30 kHz = 0.625 kV/m Ceiling

For workers with cardiac pacemakers, the permissible exposure is 1 kV/m.
There are no limiting factors that will preclude the CHSST 100L vehicle from meeting AC electric field TLV's in the sub-radio frequency range, as shown above. However, prior to a U.S. application, these measurements should be conducted to document that the AC electric filed level is well within the allowable limits.

5.6.2.2 Magnetic Flux Density of HSST-100L System

Testing of the magnetic flux density of the HSST 100L vehicle was conducted by CHSST from August 1995 through September 1997. Table 5-3 summarizes the measurements of static (DC) and AC magnetic flux density of the CHSST 100L vehicle.

Table 5-3 HSST-100L Magnetic Flux Density Test Results

Location		Magnetic Flux Density			
		Static (Gauss)		AC (60 Hz) (mG)	
Inside the Passenger Compartment		At the Floor Surface	55 cm Above the Floor	At the Floor Surface	55 cm Above the Floor
	Above the DC Filter Reactor	9.6	-	49.3	-
	Above the Linear Motor	5.7	-	52.5	18.7
	Above the Power Supply Unit	6.4	-	36.2	-
	Above the VVVF Inverter	8.1	-	233.2	25.6
Outside the Passenger Compartment	1 m Side of the Module	2.58		47	
	2 m Side of the Module	1.37		15.1	
	5 m Side of the Module	0.76		2	
	8 m Side of the Module	0.56		0.3	
	10 m Side of the Module	0.52		0	
	1 m Under the Power Trolley	2.17		75.9	
	2 m Under the Power Trolley	0.27		27.1	
	3 m Under the Power Trolley	0.36		11.3	
	4 m Under the Power Trolley	0.54		4.7	
	5 m Under the Power Trolley	-		2.2	

The measurements were conducted with Mc1 car fully loaded with ballast and the vehicle was accelerating with the maximum acceleration of 4.5km/h/s. The test protocol and the instruments followed the same method described in the Feasibility Study Committee's chapter of 1993, which has been recognized as a standard in the Japanese railway industry.

5.6.2.3 Technical Discussion - Magnetic Flux Density Tests for 100L Vehicle

General: The following paragraphs discuss technical aspects of the measurements of static and AC magnetic flux densities conducted on the HSST 100L vehicle. It should be noted that the AC magnetic flux density was measured at 60 Hz frequency, since it was the only standard

recommended in 1993 by the Japanese Electric Magnetic Fields (EMF) Effect Investigation Committee, affiliated with the Ministry of International Trade and Industry.

A. Static and AC Magnetic Flux Density Measurements Inside the Passenger Compartment

General: The main sources of the static and AC magnetic field in the passenger compartment are the electrical power devices installed under the floor. Although some miscellaneous electrical devices such as cables, circuit breakers, and lighting devices generate some amount of AC magnetic fields, the major devices for which both the static and AC magnetic flux densities were measured in the passenger compartment were the DC Filter Reactor, Linear Motor, High Voltage Inverter of the Power Supply Unit (PSU), and the VVVF Inverter.

The following notes apply to the measurements taken above these devices in multiple measuring points, yielding the maximum reading shown above in Table 1.

1. DC Filter Reactor: The DC filter reactor on the 100L vehicle is the most dominant source of static magnetic field measured in the passenger compartment, although it is not a peculiar device to the 100L vehicle, and is also used by conventional electric trains. To minimize the static magnetic flux density, three magnetic shield plates are installed under the floor covering the reactor. The interior vehicle test measurements above the DC filter reactor encompassed the maximum values of static as well as AC magnetic fields during acceleration from speed zero to 80 km/h with P3 notch, maximum acceleration of 4.5 km/h/s. Additionally, the static magnetic field during coasting with speed between 85 km/h and 90 km/h was tested. The maximum static magnetic flux density of the DC filter reactor, 9.6 Gauss, was measured during acceleration on the floor surface above the rear of the reactor. The maximum AC magnetic flux density from the DC filter reactor, 49.3 mG, was observed at the right edge of the magnetic shield plate. This value seems to be affected by the linear motor under this point.

2. Linear Motor: Static Magnetic Flux Density: Correctly, the static magnetic field sensed above the linear motors comes from the levitation magnets. A linear motor and 4 levitation magnets are installed in a levitation and propulsion module. The linear motor itself generates almost zero static magnetic field. The measurements encompass the maximum static magnetic flux density sensed during the following test conditions:
   - While the vehicle is landing from levitated status
   - During acceleration from speed zero to 80 km/h with P3 notch
   - During braking and decelerating from 90 km/h to zero.

The maximum static magnetic flux density from the linear motor, 5.7 Gauss, on the floor surface was sensed while the vehicle was landing from the levitated condition, and the same value of 5.7 Gauss was measured during braking.

AC Magnetic Flux Density: The measurements of 60 Hz magnetic flux density from the linear motor were taken during acceleration from speed zero to 80 km/h with P3 notch, at 4.5km/h/s acceleration rate, and the maximum is shown in Table 1 above.

3. Power Supply Unit (PSU): The PSU converts 1500 volts DC to 275 volts DC, 100 volts DC, and 100 volts AC. The 275 volts DC is used for the levitation power, the 100 volts DC is for

the train control, and the 100 volts AC is for the utilities. The test measurements included the maximum static magnetic filed measured during landing, acceleration, and braking, as defined for the linear motor. The maximum static magnetic field of PSU, 6.4 Gauss, was measured during braking. The measurements of 60 Hz magnetic flux density from the PSU were taken during acceleration from speed zero to 80 km/h with P3 notch, at 4.5km/h/s acceleration rate.

4. Variable Voltage Variable Frequency (VVVF) Inverter: The VVVF inverter converts the 1500 volts DC input to the variable voltage and variable frequency to supply the linear motors. The test measurements included the maximum static magnetic field measured during landing, acceleration, and braking, as defined for the linear motor. The maximum static magnetic field from VVVF inverter, 8.1 Gauss, was measured during acceleration. The measurements of 60 Hz magnetic flux density from the VVVF inverter were taken during acceleration from speed zero to 80 km/h with P3 notch, at 4.5km/h/s acceleration rate. The most dominant AC magnetic flux density measured in the passenger compartment of the 100L vehicle, 233.2 mG at the surface of the floor, comes from the VVVF inverter.

B. Static and AC Magnetic Flux Density Outside the Passenger Compartment

The outside static and AC magnetic flux density was measured at positions to the side of the vehicle and under the trolley. During the test, car Mc1 was full and car Mc2 was empty. In advance of each measurement, the vehicle was positioned a few feet ahead of the measuring point, started and passed the measuring point with the maximum acceleration of 4.5 km/h/s with P3 notch. The values of static and AC magnetic flux densities while the vehicle passed were measured, and the maximum values are summarized in Table 1 above.

The environment (i.e., Earth) static magnetic flux density at a position 5 m away from the vehicle was measured, after cutting electrical power to the trolley. Earth static magnetic flux density reading was 0.42 to 0.54 Gauss, which is the average static magnetic field strength observed in Japan.

1. Static Magnetic Flux Density - Side of the Modules: The height of the measuring points was selected to detect the largest leakage magnetic flux from the electric devices, such as the filter reactor and the levitation and propulsion modules. The test showed that when the distance from the track is 5 m or more, the static magnetic flux density is at similar level as the environment, about 0.5 Gauss.

2. Static Magnetic Flux Density – Under the Trolley: The test showed that when the distance from the trolley is 2 m or more, the static magnetic flux density is the same as the environment.

5.6.2.4 Compliance with U.S. Standards and FTA Requirements

Table 5-4 summarizes the status of compliance of the CHSST 100L vehicle with FTA requirements, and with other prominent U.S. industry standards for electromagnetic fields radiation such as the 2001 Threshold Limit Values (TLVs) for Chemical Substances and Physical Agents, Biological Exposure Indices (BEIs), by the American Conference of Governmental Industrial Hygienists (ACGIH),
Ref. 2.

Table 5-4 HSST-100L EMF Radiation Compliance w/ U.S. Standards and FTA Requirements

SYSTEM & SUBSYSTEM CHARACTERISTICS	U.S. STANDARD CODE REQUIREMENT	*REF.*	CHUBU HSST SYSTEM CHARACTERISTICS	CHUBU HSST COMPLIANCE	CHUBU HSST COMPLIANCE W/ FTA
1. Static Magnetic Field – Public Allowable (Medical Electronic Device Wearers)	5 Gauss Ceiling	2, 3	HSST 100L: At the vehicle floor level ranges between 5.7 G above the Linear Motor, to 9.6 G above the DC filter reactor. At 55 cm (22 in.) above the floor, static magnetic field was not measured but is expected to be well below 5 Gauss. Outside the passenger compartment, max. 2.58 Gauss 1 m on the side of the Module, in full compliance.	Will Comply	Will Comply
2. AC Magnetic Field – Public Allowable (Medical Electronic Device Wearers)	50 to 60 Hz = 1 Gauss Ceiling 1 Hz to 300 Hz = 60 Gauss/ Freq (Hz) Ceiling	2, 3	Peak value at 60 Hz, 0.233 Gauss at the floor, above the VVVF Inverter; 25.6 milli-Gauss at 55 cm above the floor	Yes	Yes
3. AC Electric Field – Public Allowable (Medical Electronic Device Wearers) 3a. AC Electric Field, Public Allowable	0.625 kV/m Permissible exposure = 1 kV/m (Medical Electronic Device Wearers)	2 3	There has been no need to measure AC electric field because the vehicle system has no AC high voltage circuits. Maximum voltage is DC 1500V.	Yes	 Yes
4. Static Magnetic Field – Occupational Allowable (Routine Occupational Exposure) 4a. Static Magnetic Field, Occupational Allowable, Whole working Day (8 hours)	600 Gauss 8-hour time weighted average for whole body 6,000 Gauss 8-hour time weighted average for arms and legs only. Ref. 2. Does not specify static magnetic field for workers with cardiac pacemakers. [Erroneous requirement specified in FTA document dated 6/7/01 (See Note 1)]	2 3	Occupational exposure to static magnetic field will not be exceeded with results shown in 2 above. See Note 1.	Will Comply	 TBD
5. AC Magnetic Field – Occupational	1 Hz to 300 Hz = 600 Gauss/ Freq	2	Table 1 displays full compliance of AC magnetic flux density	Yes	

SYSTEM & SUBSYSTEM CHARACTERISTICS	U.S. STANDARD CODE REQUIREMENT	*REF.*	CHUBU HSST SYSTEM CHARACTERISTICS	CHUBU HSST COMPLIANCE	CHUBU HSST COMPLIANCE W/ FTA
Allowable 1 Hz to 300 Hz 5a. AC Magnetic Field 1 Hz to 300 Hz, Occupational Allowable 5b. AC Magnetic Field 300 Hz- 30 kHz Occupational Allowable	(Hz) for whole body 1 Hz to 300 Hz = 3,000 Gauss/ Freq (Hz) for arms and legs only 10 Gauss at 60 Hz 600 Gauss/Freq (Hz) (to 300 Hz) 2 Gauss	3 2, 3	levels at 60 Hz. Figure 5-14 shows additional measurements in the frequency range 1 Hz to 100 HZ at the vehicle floor above the IGBT inverter during acceleration and deceleration. Figure 5-14 shows AC magnetic field below 1 Gauss at all frequencies, Figure 5-14 also compares the measurements to ICNIRP Guidelines observed in Japan. Figure 5-15 shows a FFT three-dimensional graph of the Z Axial Magnetic field during acceleration measured on the floor above the IGBT inverter in the frequency range 0-100 Hz. The maximum spike of AC flux density does not exceed 0.5 Gauss. Figures 5-16 and 5-17 show FFT analysis data displaying three-dimensional graphs of AC magnetic flux density measured at the vehicle floor level above the IGBT inverter during acceleration, in the frequency range up to 1000 Hz. Figure 5-16 displays X axial measurements, and Figure 5-17 displays Z axial measurements. Both graphs show that magnetic flux density in the frequency range above 100 Hz is very low and far below 2 Gauss.	Yes	Yes Yes
6. AC Electric Field – Occupational Allowable 6a. AC Electric Field, Occupational Allowable	0 Hz (DC) to 100 Hz = 25 kV/m Ceiling 100 Hz to 4 kHz = 2,500 kV/m /Freq (Hz) Ceiling 4 kHz to 30 kHz = 0.625 kV/m Ceiling Same as above	2 3	There has been no need to measure AC electric field because the vehicle system has no AC high voltage circuits. Maximum voltage is DC 1500V.	Yes	Yes

Notes to Table 5-4:

1. Ref. 3 FTA requirements specify, under the category of static (DC) magnetic field, whole working day (8 hrs) occupational allowable level, four separate requirements:

A. Permissible exposure of 1 Gauss for workers with cardiac pacemakers. This requirement is very severe and not supported by Ref. 2, which does not specify any requirement for 8-hours time weighted average threshold limit value (TLV) in static magnetic field for medical electronic device wearer. FTA's stringent requirement of 1 Gauss of static magnetic field is in the range whereby workers who are deemed "at risk" from magnetic flux density of 1 Gauss are equally "at-risk" from the prevailing environmental static magnetic field, i.e., Earth's magnetic field which is in the range of 0.5 Gauss DC. The limit of exposure to 1 Gauss DC is very harsh and may prove to be very difficult to meet in any transit occupational environment, not just a maglev system. It should be noted that both Ref. 2 and Ref. 3 agree that persons with a cardiac pacemaker and medical electronic device wearers should not be exposed to a static magnetic field level exceeding 0.5 mTesla (5 Gauss), which is achievable, realistic and represents a level higher by one order of magnitude above the environmental (e.g., Earth's) static magnetic field. We strongly recommend that employees who are deemed "at risk" from static magnetic flux density of 1 Gauss not be allowed to work in an environment where a consensus industry standard allows persons with a cardiac pacemaker and medical electronic device wearers to be exposed to static magnetic field of up to 0.5 mTesla (5 Gauss). If FTA requirement for permissible exposure of 1 Gauss DC magnetic field is to be enforced for workers with cardiac pacemakers, through vehicle design changes and not through employee work procedures, then further study of the possible addition of shielding plates under the vehicle cab should be explored, including the adverse impact of the added vehicle weight on maglev operations.

B. 10 Gauss at 60 Hz. This requirement is appropriate for AC magnetic fields, not DC.

C. 600 Gauss/f (to 300 Hz). This requirement is appropriate for AC magnetic fields, not DC.

D. 2 Gauss (300 Hz-30 kHz). This requirement is appropriate for AC magnetic fields, not DC.

References:

1. Chapter on Economic Feasibility Study of Magnetic Levitation Linear Motor car for Urban Transportation, by the Japan Transportation Economics Research Center, Aichi Prefecture, March 1993.
2. 2001 Threshold Limit Values (TLVs) for Chemical Substances and Physical Agents, Biological Exposure Indices (BEIs), by the American Conference of Governmental Industrial Hygienists (ACGIH).
3. General Requirements Document, Low Speed Maglev Technology Program, Federal Transit Administration, June 7, 2001.

5.7 EMERGENCY EVACUATION

This section of the chapter examines the issue of emergency evacuation from the HSST 100L vehicle between stations on the guideway in case of vehicle fire when evacuation in a timely manner is critical. The current configuration of emergency evacuation in Japan is examined and

assessed for compliance with U.S. standards such as NFPA 130. Guideway design issues are also assessed.

5.7.1 Current Evacuation Method in Japan

Chapter No. 4 of the MUSA team noted that the configuration of the guideway would be impacted by the type of emergency evacuation system that is provided for passengers on a train that is stranded at some point along the guideway. For the Tobu-Kyuryo Line (TOBU-KYURYO) being constructed in Nagoya, an emergency walkway has been provided along the center of the dual guideway. The walkway is continuous along the full length of the guideway. An elevation and side view of the walkway were contained in Chapter 4 **Figure 4-19**. The walkway sits level with the top of the pier caps so it is necessary to climb down to it from the guideway track level. In the event of an emergency, the evacuation procedure is as follows:

(iv) The door at either end of the train is opened and a gangplank deployed from the train to the guideway. (Chapter 4, Item 1 on **Figure 4-19**)

(v) A ladder is then placed between the guideway and emergency walkway. (Chapter 4, Item 2 on **Figure 4-19**).

(vi) Passengers evacuate one by one through the front door of the vehicle onto the guideway then climb down from the guideway to the emergency walkway.

In the event of an emergency such as a train-disabling onboard fire resulting in a disabled train between stations with fire and smoke condition, the shielding and materials used within the vehicle and particularly the floor in an under car fire, will provide a certain length of time for passengers to evacuate. The objective in emergency evacuation, particularly under-vehicle fire, is to evacuate passengers as quickly and safely as possible and within the period for which fire-resistant barrier is available. A disadvantage of the TOBU-KYURYO configuration is that it is much slower to evacuate the vehicle from the end door where passengers disembark one by one compared to side doors where a larger number can disembark at the same time. In addition, the need for each evacuee to climb down a ladder from the guideway to the lower service walkway due to lack of walking surface on the guideway is a major "bottle neck". It is also more difficult for people assisting disabled persons to negotiate a path from the end door over the gangplank, and sleeper / rail assemblies. The sleeper / rail assemblies and the ladder to the lower walkway are a greater impediment to speed of evacuation compared to other flow rates along the path such as the constriction imposed by the end- door and gangplank at the front of the train.

5.7.2 Possible Improvements

One possible guideway structural improvement, which will considerably improve the speed of train evacuation on the guideway in the existing evacuation method through end-door in Japan, is the provision of a guideway walking surface using a direct fixation method to attach the rails (See Chapter 4, **Figure 4-23**), since the top of the guideway would be smooth with no sleepers to climb over. In fact the top of the guideway itself could serve as the emergency walkway.

Regarding the existing guideway track design, eliminating sleepers is difficult because it represents a major design change for the existing system. A more feasible solution is to install a

walking surface/ grate at the track level of the existing guideway but the penalty is an increase in guideway cost, and more complicated guideway maintenance.
With regard to direct fixation method of the guideway to eliminate sleepers, CHSST already tried implementing this in previous applications including the existing test track in Nagoya, Japan, but encountered other problems, such as thermal expansion stress or difficulty of settlement for the rail alignment.

However, perhaps the most efficient and safest way to evacuate the vehicle would be from the side doors. Evacuation could be accomplished in one of two ways. For non-fire situations of a disabled train on the guideway requiring passenger evacuation, a spare train could be brought up alongside the stranded vehicle and a gangplank suspended horizontally between the vehicles. Evacuation would be reasonably quick with no encumbrances to negotiate or climb over. Alternatively, an emergency walkway could be suspended in the center of the dual guideway such that the walkway surface would be at the same level as the floor level of the vehicle. A short ramp is all that would be required to evacuate the vehicle quickly.

The selection of evacuation methods would be driven by safety, constructability, practicality and aesthetics. One of the reasons the walkway for the TOBU-KYURYO in Nagoya is located at the same level as the top of the pier caps is that it is easier and less costly to construct, and also can serve as a service walkway for maintenance with convenient access to the underside components of the train. A major detraction in the current evacuation method is the restrictive exit flow rate and waiting times along the evacuation route of the last passenger on the train through the train end-door and the sloped gangplank to the guideway and having to climb down to the lower service walkway using a low- flow element such as a ladder which creates a major "bottle neck" for the entire occupant load of the train. An elevated walkway would be more costly and detract from the sleek appearance of the guideway. The presence of an emergency walkway also adds to the overall width of the pier caps and moves the center of the loads from the vehicles further out from the centerline of the piers, thus increasing the eccentric loads acting on the piers and foundations. While the design of the means of evacuation will be driven primarily by safety, and code compliance with U.S. standards such as NFPA 130, use of the top surface of the guideway itself as the emergency walkway has merit if the option of direct fixation of the rail is further developed for a U.S. application in the future.

A detailed comparative quantitative evaluation of flow rates and overall evacuation times achievable for a single vehicle and a three-car train (MC1, M and MC2 cars), under the current evacuation method in Japan through end-door to the lower service walkway, and through side doors to a future, U.S.-style, elevated walkway along the guideway, is contained in **Appendix D** herein. The comparative evaluation also assesses acceptability of the two evacuation methods and compliance with U.S. standards such as NFPA 130, required for application of the CHSST 100L vehicle in the United States. The comparative quantitative evaluation leads to the conclusion that in a U.S. application of the CHSST 100L vehicles, using the existing guideway design with sleeper/rail assemblies which do not provide walking surface for the evacuees on the guideway, the preferred solution is to provide an elevated walkway, in order to comply with timely exiting requirements under emergency evacuation per NFPA 130 for the 100L vehicle with its current 15-minutes fire-rated floor.

5.8 AMERICANS WITH DISABILITIES (ADA) APPLICATIONS

5.8.1 Station and Fixed Facilities

Chapter No. 4 reviewed the key design criteria and considerations that influence the design of a station and presented some station concepts that would be suitable for stations serving the needs of low speed maglev systems located in urban environments. In keeping with the goal of developing cost effective maglev systems, the station concepts offered are for simple structures that are constructed with economical materials yet provide a safe, accessible, welcoming and comfortable facility for passengers.

5.8.1.1 Codes and Standards

Although there are many codes and standards applicable to the design of passenger train stations, some of the most important ones in terms of facility design are as follows:

BOCA National Building Code

State and City Building Codes (Which will cover supplemental requirements of individual states, cities and jurisdictions).

NFPA 130 "Standard for Fixed Guideway Transit and Passenger Rail Systems, 2000 Edition

ASCE Automated People Mover Standard – Part 3 – ASCE 21-00 (Which specifically covers stations for APM systems)

OSHA – U.S. Department of Labor, Occupational Safety and Health Administration

Americans with Disabilities Act (ADA) 28 CFR Part 36 "Standards for Accessible Design, ADA Accessibility Guidelines for Buildings and Facilities", Rev. July 1, 1994.

5.8.1.2 Americans with Disabilities Act

Of the above codes and standards, the Americans with Disabilities Act (ADA) most strongly influence the space planning and circulation of people within stations. Specifically, the criterion of ADA that as of January 26, 1993, all new stations must be built to be accessible. The station planning and design of a U.S. maglev train station would embrace the intent of the ADA to the maximum extent possible. Specific provisions of the ADA that are applicable to station design include:

(i) Stations and Facilities
- Circulation Paths
- Stairs, Ramps, Elevators, Escalators
- Platform and Floor Finishes
- Public Address Systems (for vision impaired visitors)
- Signage (for hearing impaired visitors)
- Emergency Alarms
- Informational Areas

- Telephones (optional) (text TDD type)

(ii) Waiting and Boarding
- Accessible Route
- Wheelchair Locations
- Information Systems
- Platform Edge Warning
- Gap distance between Car and Platform
- Platform Edge to Vehicle Floor Vertical Clearance

(iii) Site and Entrance

- Station Visibility
- Signage
- Approach
- Ramps
- Surfaces
- Lighting

5.8.2 Existing CHSST system Accessibility Standards in Japan

The CHSST system under design and construction for the Tobu-Kyuryo Line (TOBU-KYURYO) in Nagoya, Japan, adheres to the Japanese "Barrier Free Law" which became effective on November 15, 2000. This law is similar in its technical provisions to the U.S. ADA standards for accessible design requirements for transportation systems. This law was issued in Japan to promote design and construction of accessible ("barrier free") stations, passenger facilities and vehicles by public transportation companies for elderly and handicapped patrons, to facilitate their easy and safe movement when using public transportation.

While an official American/English translation of the Japanese "Barrier Free Law" is unavailable, a qualitative assessments of a sample of its provisions indicates that the Japanese concept of providing accessible routes for elderly and handicapped patrons, including wheelchair users, visually impaired and other disabled persons, is similar to that mandated by the U.S. ADA accessibility requirements in transportation systems. The goal of providing at least one accessible route for the passengers from the station entrance to the train boarding area on the platform, and onto the train, is common to both U.S. and Japanese accessibility standards.

Generally, the Japanese barrier free technical requirements are comparable but slightly less stringent and less detailed compared to U.S. accessibility standards in architectural dimensions for minimum clear width and circulation space required for wheelchair users along accessible routes. Examples include the requirements for minimum clear width of an accessible entrance, door, passageway, the width and slope of ramp/walkway, size and intervals of ramp landings, etc. These minor differences in measurements most probably arise from the different anthropometrical characteristics of the respective populations using transportation facilities and rolling stock in Japan compared to the U.S. In some isolated areas, the Japanese requirements for guiding visually impaired persons by means of detectable tactile warnings and guiding surfaces ("Line Block") on the station floor, and the provisions to guide visually impaired

patrons from the station entrance all the way to the vehicle boarding/ de-boarding area on the platform, equal or exceed U.S. ADA requirements.

5.8.2.1 Japanese "Barrier Free Law."

The following **Table 5-5** is comprised of a sampling of the provisions in Chapters 1 through 3 of the Japanese "Barrier Free Law", annotated to indicate compliance with U.S. ADA standards for fixed facilities and vehicles, as applicable**.**

Table 5- 5 Sample Requirements of Japanese "Barrier Free Law

Sample requirements of Japanese "Barrier Free Law", Effective Nov. 15, 2000. [Annotated to Indicate Compliance with U.S. ADA Standards for Fixed Facilities and Vehicles, as applicable]
Chapter 1: General rules
Sample of Definitions of Terms in this law:
(1) <Guidance blocks for visually handicapped person>: Blocks constructed on the floor surface consisting of line blocks and point blocks. [Note: similar to or exceeds U.S. ADA Standards, which use point blocks, i.e., raised truncated domes, as detectable warning at curb ramps, platform edge, but do not require floor line blocks for directional guidance]
(2) <Line block>: A block constructed on the floor surface for the purpose of directionally guiding the visually impaired. Distinguished by: a. Projections shaped as lines b. Color & brightness significantly different than surrounding floor surface. [Note: exceeds U.S. ADA Standard, which does not require line blocks]
(3) <Point block>: A block constructed on the floor surface to warn or alert the visually impaired of abrupt change in floor level. Distinguished by: a. Projections shaped as points b. Color & brightness significantly different than surrounding floor surface. [Note: meets U.S. ADA Standard]
(4) <Wheelchair space>: An area provided on the vehicle, etc. for a person using a wheelchair (hereinafter, "wheelchair user"), and which is characterized by the following requirements: a. Enough area shall be provided so that the wheelchair user may easily use it. b. A handrail, grab bar, or stanchion, as appropriate, shall be installed within easy reach, for easy use by a wheelchair user. c. The floor surface finish shall be slip-resistant. d. The area shall not have steps obstructing movement of wheelchair user. e. The area shall be clearly marked as wheelchair space. [Note: generally less stringent than U.S. ADA requirements in not quantifying dimensions of clear space, range of reach, etc.]
(5) <Train station>: A railroad facility under Japan's Railway Operation Law (No. 92, dated 1986), provided for passengers entraining, detraining, waiting for trains, etc. [Note: no detailed distinction between existing, retrofitted or new facilities].
(10) <Railroad car>: The vehicle provided for operation by the railway company under the Railway Operation Law to transport passengers. [Note: no detailed distinction between existing, retrofitted or new vehicles and types]
Chapter 2: Passenger Facilities
Paragraph 2: Common
Item 1: Accessible route where facilitation of movement shall be provided for the elderly and handicapped
Article 4:
1. At least one accessible route between the public area outside the passenger station and the transit vehicle boarding and de-boarding area on the station platform shall be provided to facilitate the smooth movement of a senior citizen and/or a physically handicapped person, for each passenger station platform. [Note: generally compliant with, but less stringent than U.S. ADA requirements in not specifying additional requirements for the exterior station site approaching the station entrance, if part of the transit facility.]
2. A sloped ramp/walkway or an elevator shall be provided to facilitate vertical circulation between differing surface levels to create an accessible route. When it is structurally difficult to provide a sloped walkway or an elevator, an escalator, or, when it is structurally difficult to provide an escalator, a wheelchair lift, suitably constructed for easy use of the wheelchair user, shall be provided. [Note: generally compliant with U.S. ADA requirements, but the U.S. ADA standards further specify more detailed design requirements]

Sample requirements of Japanese "Barrier Free Law", Effective Nov. 15, 2000. [Annotated to Indicate Compliance with U.S. ADA Standards for Fixed Facilities and Vehicles, as applicable]
3. The preceding clause may not be required when the elderly or physically handicapped person can move smoothly anytime during business hours of the passenger facilities, between the public area outside the station and the transit vehicle boarding and de-boarding area on the station platform, by using the sloped ramp/ walkway (meeting the requirement herein) or elevator (meeting the requirements herein) in other facilities which are adjacent to the passenger facilities and used as one structure. This shall apply also when it is difficult to set up the elevator by reason of supervision. [Note: generally compliant with, but less stringent than U.S. ADA requirements addressing Direct Connections leading to commercial, retail, or residential facilities].
4. The entrance to the passageway along an accessible route shall meet the following requirements:
(1) The minimum effective entrance width shall be 90 centimeters. However, when it is not feasible due to structural reasons, the minimum entrance width may be 80 centimeters. [Note: generally compliant with U.S. ADA Standard for doorways, except that the U.S. standard requires doorways to have a minimum clear opening of 81.5 cm (32 in.)]
(2) When a door is installed in the entrance to an accessible route, it shall meet the following requirements: a. The minimum effective clear width shall be 90 centimeters. However, when it is not feasible due to structural reasons, the minimum width may be 80 centimeters. b. The door should be designed for automatic opening and closing; otherwise, the door shall be designed for easy opening, closing and passing through by wheelchair users, senior citizens and physically handicapped persons. [Note: generally compliant with U.S. ADA Standard, except that U.S. standard requires doorways to have a minimum clear opening of 81.5 cm (32 in.)].
(3) There shall not be steps in the accessible entrance. When steps are structurally unavoidable, a sloped ramp/walkway providing accessible entrance as an annex to the steps shall be provided. [Note: generally compliant with U.S. ADA Standard]
5. The passageway along an accessible route shall meet the following requirements:
(1) The minimum effective width shall be 140 centimeters. However, when it is not feasible due to structural reasons, and when wheelchair turning spaces are provided at each end of the passageway and at intervals not exceeding 50 meters apart, the effective minimum width of the passageway may be 120 centimeters. [Note: generally compliant with U.S. ADA Standard for minimum clear width of an accessible route, which requires a minimum of 91.5 cm (36 in.) continuous clear width of an accessible route. However, the U.S. ADA minimum width for two wheelchairs to pass is 152.5 cm (60 in.), and if an accessible route has less than 152.5 cm (60 in.) clear width, such as in the case of 120 cm or 140 cm width, then passing spaces at least 152.5 cm by 152.5 cm (60 in. by 60 in.) shall be located at reasonable intervals not to exceed 61 m (200 ft)].
(2) When a door is installed in the entrance to an accessible route, it shall meet the following requirements: c. The effective clear width shall be 90 centimeters or more. However, when it is not feasible due to structural reasons, it may be 80 centimeters or more. d. The door should be designed for automatic opening and closing; otherwise, the door shall be designed for easy opening, closing and passing through by wheelchair users, senior citizens and physically handicapped persons. [Note: generally compliant with U.S. ADA Standard, except that U.S. standard requires doorways to have a minimum clear opening of 81.5 cm (32 in.)].
(3) There shall not be steps along an accessible passageway. When steps are structurally unavoidable, a sloped ramp/walkway providing accessible path as an annex to the steps in the passageway shall be provided. [Note: generally compliant with U.S. ADA Standard]
6. The sloped ramp/walkway along an accessible route shall meet the following requirements.
(1) The effective minimum width of the ramp shall be 120 centimeters. However, the minimum ramp width can be made 90 centimeters when it is installed as an annex to steps. [Note: generally compliant with U.S. ADA Standard, except that U.S. standard requires a minimum clear width of a ramp to be 91.5 cm. (36 in)].
(2) The slope of the ramp shall be 1/12 or less [Note: same as U.S. Standard]. However, when the rise of the ramp walkway is 16 centimeters or less, the slope can be made 1/8 or less. [Note: U.S. Standard is slightly more stringent, requiring a slope between 1:10 and 1:12 for a maximum rise of 16 cm, or a slope between 1:8 and 1:10 for a maximum ramp rise of 8 cm.]

Sample requirements of Japanese "Barrier Free Law", Effective Nov. 15, 2000. [Annotated to Indicate Compliance with U.S. ADA Standards for Fixed Facilities and Vehicles, as applicable]
(3) A ramp walkway where the rise exceeds 75 centimeters [Note: 76 cm in U.S. Standard], shall have a level landing with a minimum length of 150 centimeters [Note: 152.5 cm in U.S. Standard] for every 75 centimeters [Note: 76 cm in U.S. Standard] of rise in the ramp run.
Article 8: Guidance for Visually Handicapped Persons
Guidance blocks on the surface shall be installed along an accessible route from the entrance of the passenger station and the transit vehicle boarding and de-boarding area on the platform. Alternatively, equipment by which a visually handicapped person is audibly warned or guided by voice and other methods shall be installed. [Note: fully compliant with, or exceeds U.S. ADA standards regarding detectable warnings].
Item 3: Guide equipment
Article 9: Operation Information Equipment
Equipment to display information on operation of trains including operational service information, visually and audibly, shall be provided. However, when it is not feasible due to technology, equipment or power constraints, this clause shall not apply. [Complies with U.S. ADA standards].
Additional requirements on station signage, and passengers service areas including ticket office, passenger waiting areas, information office, ticket vending equipment, restroom, are provided in the Barrier Free Law but are unavailable in English translation.
Paragraph 3 Train station
Article 18: Fare Collection Gate
At least one accessible fare collection gate shall be installed in an accessible route in the passenger station, and shall have a minimum clear width of 80 centimeters. [Generally compliant with U.S. ADA Standard, except that U.S. standard requires fare collection gate to have a minimum clear opening of 81.5 cm (32 in.)].
Article 19: Station Platform
The passenger station platform shall meet the following requirements:
(1) The horizontal gap between the platform edge and the transit vehicle floor at the door threshold shall be as small as possible in the range mandated by the vehicle dynamic clearance envelope. If a large horizontal gap is unavoidable due to structural reasons, suitable warning to passengers shall be installed. [Note: the specific horizontal gap between vehicle gauge and construction clearance of platform of the CHSST vehicle in Japan is 70 mm (2.76 inches). The gap between the vehicle gauge and vehicle dynamic envelope is 62 mm (2.44 inches). This indicates compliance with U.S. ADA requirement, which allows a maximum horizontal gap of 76 mm (3 in) between the platform edge and the vehicle floor threshold].
(2) The vertical gap between the station platform and the vehicle floor level shall be kept as small as possible. [Note: the current design practice for the TOBU-KYURYO system is 36 mm (1.4 inches) vertical difference of the vehicle floor below the platform level. This can be controlled in a U.S. application of the 100L vehicle by adjusting the vehicle leveling valve and/or adjusting the rail tolerance in the station platform area, to bring the vehicle floor level within a vertical range of +/- 5/8 in (16mm) from the platform level during train boarding, in compliance with the U.S. ADA accessibility standard].
(3) At least one equipment for the boarding and de-boarding of wheelchair users shall be provided on the station platform when the horizontal or vertical gap between the platform edge and the vehicle floor present an obstacle for smooth boarding and de-boarding of wheelchair users. However, when providing such equipment is not feasible due to the structural reasons, this clause shall not apply. [Note: complies with U.S. ADA standards].
(4) In Platforms without screen doors or movable gates, the horizontal gradient for the drainage, shall be one percent as a standard. However, when it is not feasible due to structural reasons, this clause shall not apply. [Note: complies with U.S. ADA standards].

Sample requirements of Japanese "Barrier Free Law", Effective Nov. 15, 2000. [Annotated to Indicate Compliance with U.S. ADA Standards for Fixed Facilities and Vehicles, as applicable]
(5) The surface of the platform floor should be slip-resistant finish. [Note: complies with U.S. ADA standards].
(6) A platform door, a movable gate, detectable warning point block and/or other means shall be provided to prevent visually handicapped persons from falling. [Note: complies with U.S. ADA standards].
(7) Fence or other type barrier shall be installed to prevent passengers from falling at the non-boarding edges of the station platform, except where access/ egress stairs are provided, or when there is no risk of passengers falling. [Note: complies with U.S. ADA standards].
Article 20: Directions for Boarding/ De-boarding from the Station Entrance for Wheelchair User
In an appropriate place in the train station, display the locations on the platform, where accessible boarding positions on the platform are provided, leading to the wheelchair spaces installed on the train, when such positions are fixed on the platform. [In General compliance with U.S. ADA standards. For new cars in U.S. application, all train cars must have accessible side doors and space for wheelchair users so boarding locations on the platform are not a critical issue].
Chapter 3: Vehicle
Paragraph 1: Rolling stock
Article 29: Applicability
The structure and the equipment of the rolling stock shall meet the standards stipulated in this paragraph.
Article 30: Passenger Boarding and De-boarding Entrance
The passenger boarding and de-boarding entrance(s) to the vehicle shall meet the following requirements:
(1) The horizontal gap between the platform edge and the transit vehicle floor at the door threshold shall be as small as possible in the range mandated by the vehicle dynamic clearance envelope. If a large horizontal gap is unavoidable due to structural reasons, suitable warning to passengers shall be installed. [Note: the specific horizontal gap between vehicle gauge and construction clearance of platform of the CHSST vehicle in Japan is 70 mm (2.76 inches). The gap between the vehicle gauge and vehicle dynamic envelope is 62 mm (2.44 inches). This indicates compliance with U.S. ADA requirement, which allows a maximum horizontal gap of 76 mm (3 in) between the platform edge and the vehicle floor threshold].
(2) The vertical gap between the station platform and the vehicle floor level shall be kept as small as possible. [Note: the current design practice for the TOBU-KYURYO system is 36 mm (1.4 inches) vertical difference of the vehicle floor below the platform level. This can be controlled in a U.S. application of the 100L vehicle by adjusting the vehicle leveling valve and/or adjusting the rail tolerance in the station platform area, to bring the vehicle floor level within a vertical range of +/- 5/8 in (16mm) from the platform level during train boarding, in compliance with the U.S. ADA accessibility standard].
(3) The minimum effective clear width of at least one of the boarding/ de-boarding side doors for the passenger on the vehicle shall be 80 centimeters, per one train. However, when it is not feasible due to structural reasons, this clause shall not apply. [Note: while the Japanese Barrier Free Law is similar to the U.S. requirements for existing non-accessible vehicle fleets which required retrofit by 1996 to make at least one car per train accessible with identifying signage, the U.S. ADA requirements for new cars requires all vehicle doors to be accessible. The current width of the CHSST 100L vehicle side-doors in Japan is 80 cm, at all side-doors on the train. This is nearly compliant with the U.S. ADA Standard, except that U.S. standard requires vehicle doorways to have a minimum clear opening of 81.5 cm (32 in.), and no relief is provided for new cars. Full compliance with U.S. ADA standard is achievable in a U.S. application of the 100L vehicle at a small additional cost in increasing the side-door width from 80 cm to 81.5 cm]
(4) The floor at the boarding and de-boarding side doors shall be slip-resistant finish. [Note: complies with U.S. ADA standards].
(5) Equipment to inform passengers by audible announcement of the side where the doors will open for de-boarding and an audible signal for opening and closing of doors shall be provided on the vehicle. [Note: complies with U.S. ADA standards]

Sample requirements of Japanese "Barrier Free Law", Effective Nov. 15, 2000. [Annotated to Indicate Compliance with U.S. ADA Standards for Fixed Facilities and Vehicles, as applicable]
(6) Steps in the car should be able to be identified easily by the significant contrast in brightness and color between an edge of steps in the car and the surrounding area. [Note: while this requirement is similar to U.S. ADA requirements for light rail or commuter rail cars where low platform boarding is used, for maglev vehicles such as the CHSST 100L there are no steps in the vehicle, and the requirement is not applicable].
Article 31 Passenger Compartment and Wheelchair Space on the Vehicle
1. One or more wheelchair spaces shall be provided per train. However, when it is not feasible due to structural reasons, this clause shall not apply. [Note: while the Japanese Barrier Free Law is similar to the U.S. requirements for existing non-accessible vehicle fleets, which required retrofit by 1996 to render at least one car per train accessible with identifying signage, the U.S. ADA requirements for new cars requires all vehicles to have two wheelchair spaces per vehicle. Currently in Japan, only the two end-cars, MC1 and MC2 of a 3-car train consist of CHSST 100L vehicles have one wheelchair space per end-car. The M car does not have wheelchair space. This current condition in Japan is not compliant with the U.S. ADA Standard, and will require some re-allocation of vehicle floor space and the likely use of folding bench-seats near each of the vehicle's side-doors on each of the M and Mc type cars, or increase in standee room, to provide two spaces of 30 in x 48 in per car for wheelchair users. These wheelchair spaces shall not unduly restrict movement of other passengers on the vehicle. This re-allocation of floor space can be accomplished as part of a trade-off adjustment in the standee/seated passenger ratio and vehicle maximum capacity, which, coupled with FTA desired goal of 12,000 passengers throughput of the system per hour per direction, may require either deployment of 4-car train consists, or closer headway].
2. Handrail should be installed in the aisle and at the designated wheelchair space area. [Note: generally complies with U.S. ADA standards for handrails and stanchions, but additional detailed handrail specifications required by the U.S. ADA vehicle accessibility standard shall be implemented in a U.S.-application of the 100L vehicle].
3. Lavatory requirements. Deleted as not applicable to low-speed Maglev CHSST 100L vehicle used in urban transit service environment, not intercity or commuter rail.
4. One or more aisles with minimum effective width of 80 cm shall be provided between the vehicle boarding/ de-boarding side-door and the wheelchair space installed by clause 1 herein. However, when the provision of such accessible aisle is not feasible due to structural reasons, this clause shall not apply. (Additional requirement for accessible aisle to Lavatory deleted as not applicable to Maglev 100L vehicle, used in Urban transit application). [Note: Since the current accessible single path between the side-door and the wheelchair space on the 100L vehicle exists only once in each end-car (Mc1 and Mc2,) of the 3-car consist, the condition is in significant non-compliance with U.S. ADA standard requiring two wheelchair-spaces per car on each vehicle of the train. Compliance with the U.S. ADA standard will be achieved after some re-allocation of vehicle floor space and the likely use of folding bench-seats near each of the vehicle's side-doors on each of the M and Mc type cars, or outright increase of standee room, to provide two spaces of 30 in x 48 in per car to park the wheelchair in close proximity to the door. This will facilitate accessible route from each vehicle side-door to the nearby wheelchair space. In a U.S. application of the 100L vehicle, all accessible routes beginning with the side door shall have minimum clear width of 81.5 cm (32 in) instead of 80 cm.]
5. The passenger compartment shall be equipped with audio and visual display of the next station name and other information concerning the train operation, as applicable. [Note: generally in compliance with ADA standards].
Article 32 Car Body.
1. The permanent connection between rolling stock vehicles shall be equipped with barriers to prevent the passenger on the platform from falling between cars. However, when the passengers are protected from falling by equipment on the platform, this clause shall not apply. [Note: complies with U.S. ADA standards].
2. The destination and the type of the car shall be displayed easily seen on the side of the car body. However, when the destination or the type is obvious, this clause may not be applied. [Note: complies with U.S. ADA Standard].

5.8.2.2 Compliance of CHSST Fixed Facilities with U.S. ADA Standards

It should be noted that the details of Japanese accessibility standards and specific design requirements for fixed facilities including the passenger station and adjoining site, and their compliance or departure from U.S. ADA Standards for Accessible Design of the Station, have no

adverse impact and impose no design constraint on achieving full compliance of these fixed facilities with U.S. ADA standards in a U.S. application of the CHSST system. The station and other fixed facilities in a U.S. application of the 100L maglev vehicle will be in full compliance, since there are no limitations imposed by CHSST Maglev system dimensional or interface constraints. Compliance in the U.S. will begin at the station ADA-compliant parking lot, and continue through at least one accessible route from the parking lot or drop-off/ pick-up area at the curb, through the station site and entrance, ADA-compliant fare collection equipment, along vertical and horizontal station circulation element(s), all the way to the boarding/de-boarding area on the station platform. None of the accessible route requirements per U.S. ADA standards is barred or constrained by the maglev system configuration as it currently exists or is designed for the TOBU-KYURYO in Nagoya, Japan.

Vehicle-Platform Interface. The first point of ADA structural interface with the existing maglev CHSST 100L vehicle is at the platform edge and there are no constraints on meeting the facility-related U.S. ADA requirements at the platform edge in the following areas:

- High level boarding platform edge shall be protected by guardrail, or platform screen door, or, detectable warning surface.
- 24" wide tactile warning at platform edge will be provided per ADA detailed requirements

The accessible route across the interface between the station platform and the vehicle floor in high platform level boarding, can be implemented with mostly fixed-facility-based solutions without modifications to the existing 100L vehicle in a U.S. application. The ADA requirements, which can be met by station-platform-based solutions, in a similar fashion to current design of modern U.S. driverless APM systems, include the following:

- Between-Car Barriers, such as platform gates, motion detector or train screens on the platform (e.g., Jacksonville Skyway), to prevent visually-impaired persons from erroneously stepping into the space between cars and falling off the platform edge during train boarding at the station.

- Coordination of vehicle floor with boarding platform, i.e., vertical difference of the vehicle floor within +/-5/8 in (16 mm) of the platform level, and horizontal gap within 3 in (76 mm) from the platform edge and the vehicle door threshold. Currently the design practice for the TOBU-KYURYO system in Nagoya, Japan, is 36 mm (1.4 inches) vertical difference of the vehicle above the platform level. This can be resolved for a U.S. application by adjusting the vehicle leveling valves. The specific horizontal gap of the CHSST vehicle in Japan between vehicle gauge and construction clearance of platform for the 100L vehicle is 70 mm (2.76 inches). The gap between the vehicle gauge and vehicle dynamic envelope is 62 mm (2.44 inches). This indicates compliance with U.S. ADA requirement, which allows a maximum horizontal gap of 76 mm (3 in) between the platform edge and the vehicle floor threshold.

Among the vehicle-based car borne solutions to meet ADA interface requirements at the vehicle-platform interface along the platform-edge, are the following:

- Car borne solutions to meet ADA requirements for Between-Car Barriers, may include bellows, pantograph gates, or car borne chains

- Car interior solutions to meet ADA signage requirements next to accessible doors, unless all doors are accessible. Currently, HSST 100L car doors are 80 cm (31.5") wide, while ADA requires 81.3 cm (32") wide doors. On new cars 32" wide door will be provided.
- Public Information system for boarding passengers via speaker is required when the train has more than one route from the station. The requirement can be satisfied in a U.S. application of the CHSST system via station PA speakers.

5.8.2.3 Required Modifications to Existing CHSST 100LVehicle to Meet U.S. ADA Requirements

The following summarizes recommended vehicle modifications:

- Design and construct the vehicle with clear opening width of the side doors on the vehicle 81.5 cm (32 in), instead of the current 80 cm.
- Feasible with a small additional cost of 100L vehicle.
- Widening the clear width of the aisle between seats, stanchions and handrails on the vehicle, to be at least 82 cm wide to allow wheelchair access, instead of the current 60 cm width.
- Feasible with decrease in number of seats on each vehicle.
- Providing a vehicle door chime or buzzer to alert the blind passenger to the door location (inside and outside the vehicle).
- Easily feasible at minimal cost.
- Providing physical external protection between the cars to prevent blind persons on the platform from falling between cars.
- Feasible with a small additional cost of 100L vehicle.
- Verify 100L vehicle currently meet lighting requirements so that all doorways shall have, when the door is open, at least 2 foot-candles of illumination measured on the door threshold.
- Light level will be verified, but the emergency lighting system powered by on-board batteries is already provided.

5.8.3 Maglev Station Planning Considerations in U.S. Application

As discussed in Chapter 4, in order to meet the economic goal of minimizing system costs, station structures should be kept to a minimum while accomplishing the necessities of weather protection, efficient circulation, accessibility, patron safety, visitor information and system security. From an intermodal perspective, stations should be designed to connect well to other modes of transport including adjacent train stations, parking for cars and unloading facilities for buses and taxis. From a community perspective, the stations should be designed to blend in well with the surrounding urban environment. In summary, the following objectives will be aspired to:

Passenger Service

- Facilitate access and orientation
- Ensure safety and security
- Provide barrier free access
- Minimize crowding and congestion

Environmental

- Provide a comfortable environment in terms of space, light, acoustics and security
- Provide adequate weather protection
- Provide for convenience

Economics

- Minimize total costs consistent with value required
- Utilize energy efficiently
- Minimize operational costs, maintenance and cleaning
- Consider the consequences of growth and expansion

5.8.3 Platform Design

In most urban maglev system applications, it is likely that a dual guideway configuration will be used, since a dual guideway reduces the number of switches and imposes the fewest restraints to multi-train flow through the system. For this reason this section focuses on station types for dual guideways. There are basically two platform configurations for dual guideway stations: center island platform as shown in Chapter 4 **Figure 4-11** and side platforms as shown therein in **Figure 4-12**. Platform dimensions are a function of vehicle length and passenger capacity. Vehicle length will be project specific and depend on the operating characteristics of the system under consideration. The Tobu-Kyuryo Line (TOBU-KYURYO) in Nagoya for instance uses three-car trains. This translates to a platform length of approximately 45 m (148 ft). Platform width is estimated to be 3.7 m (12 ft) for each side platform, and 6.7 m (22 ft) for a center island platform.

It is envisaged that the platform substructure be constructed in reinforced concrete, and the platforms formed by double-tee precast beams. The platform surfaces would therefore be smooth finish concrete and would be protected with a sealer. The center platform would be crowned to provide a positive slope to the trackway. Side platforms would also be sloped toward the trackway. Tactile surfaces would be of a size, texture, finish and color to comply with the recommended accessibility requirements. An appropriate number of simple benches would be provided at the platform level for patron comfort while waiting. The platforms would be covered with canopy roofs to provide weather protection. However, the environment in which the station is located will influence the degree of weather protection provided.

Circulation: A key requirement in any station design is efficient circulation of people through the station. Circulation should be simple and direct, avoiding unnecessary and disorienting turns, excessive travel lengths, cross-flows and dead-ends. Visitors of all abilities should use space outside the mainstream of patron flow for slow passage, and right-hand flow should be provided wherever possible. Equipment and furnishings should not be located within main pathways and queuing spaces should be created where necessary.

Materials and Finishes: The selection of materials and finishes will pay close attention to safety, durability and maintainability. Fire resistive materials with low flammability and smoke generation characteristics would be selected. From a durability standpoint the materials should resist excessive usage and harsh weather conditions while remaining attractive. The materials should also be cleanable in a single operation with standard equipment. Careful selection of

materials is not only important from an up-front capital cost, but is equally important when considering the ongoing operating costs of the system. The following lists of materials are representative of the quality of finishes that would be suitable for use within the stations:

(vii) Floors
- Concrete topping – smooth finish – sealed
- Cement terrazzo
- Tactile warning strips – fired clay products, masonry, granite

(viii) Walls
- Concrete unit masonry – scored, ribbed, split-face
- Granite – natural stone
- Stainless steel panels

(ix) Ceilings
- Metal panel systems – perforated for acoustical properties
- Suspended acoustical ceilings in interior spaces

(x) Fascia Systems
- Exterior insulation and finish systems (EIFS)

(xi) Roofs
- Sloped - Standing seam metal panels with concealed fasteners
- Flat – Modified bitumen membrane system

(xii) Support Systems
- Tubular steel – Kynar coated

5.8.4 Summary of Code Compliance with Americans with Disabilities (ADA)

The CHSST maglev system when built in the U.S., will be built to U.S. accessibility standards. All stations and vehicle access and egress will be in compliance with:

1) 28 CFR Part 36
Revised as of July 1, 1994
Department of Justice: Nondiscrimination on the Basis of
Disability by Public Accommodations
and in Commercial Facilities
Code of Federal Regulations

2) 49 CFR Part 37
Revised as of October 1, 1996
TITLE 49--TRANSPORTATION
PART 37--TRANSPORTATION SERVICES FOR INDIVIDUALS WITH DISABILITIES (ADA)

3) Code of Federal Regulations
[Title 49, Volume 1, Parts 1 to 99]
[Revised as of October 1, 1997]
TITLE 49--TRANSPORTATION
Subtitle A--Office of the Secretary of Transportation
PART 38--AMERICANS WITH DISABILITIES ACT (ADA) ACCESSIBILITY SPECIFICATIONS

Applicability to AGT, Light Rail or Rapid Transit system ADA standards:

49 CFR Part 38 in Sec. 38.173 "Automated guideway transit and systems", states that Light rail and rapid rail AGT and systems shall comply with subparts D and C of this, respectively. AGT systems whose travel at a speed of more than 20 miles per hour at any location on their route during normal operation, are covered under this paragraph rather than under paragraph (a) of this section.

49 CFR Part 38 in Sec. 38.175 "High-speed rail cars, monorails and systems", states that

(a) All cars for high-speed rail systems, including but not limited to those using "maglev" or high speed steel-wheel-on-steel rail technology, and monorail systems operating primarily on dedicated rail
(i.e., not used by freight trains) or guideway, in which stations are constructed in accordance with 37, subpart C of this title, shall be designed for high-platform, level boarding and shall comply with
Sec. 38.111(a) of this for each type of car that is similar to intercity rail, Secs. 38.111(d), 38.113 (a) through (c) and (e), 38.115 (a) and (b), 38.117 (a) and (b), 38.121 through 38.123, 38.125(d), and
38.127 (if applicable) of this.

The design of cars shall be coordinated with the boarding platform design such that the horizontal gap between a car door at rest and the platform shall be no greater than 3 inches and the height of the car floor shall be within plus or minus \5/8\ inch of the platform height under all normal passenger load conditions. Vertical alignment may be accomplished by car air suspension or other suitable means of meeting the requirement.

All doorways shall have, when the door is open, at least 2 foot-candles of illumination measured on the door threshold.

(b) All other high-speed rail cars shall comply with the similar provisions of subpart F of this.

5.8.4.1 Example of ADA Requirements for Fixed Facilities and Stations

The following are examples of requirements excerpted from 28 CFR Part 36: ADA Standards for Accessible Design, Section 10.3, illustrating requirements, which will be fully met in a U.S. application of the CHSST.

10.3 Fixed Facilities and Stations.
10.3.1 New Construction. New stations in rapid rail, light rail, commuter rail, intercity bus, intercity rail, high-speed rail, and other fixed guideway systems (e.g., automated guideway transit, monorails, etc.) shall comply with the following provisions, as applicable.

(1) Elements such as ramps, elevators or other circulation devices, fare vending or other ticketing areas, and fare collection areas shall be placed to minimize the distance which wheelchair users and other persons who cannot negotiate steps may have to travel compared to the general public. The circulation path, including an accessible entrance and an accessible route, for persons with

disabilities shall, to the maximum extent practicable, coincide with the circulation path for the general public. Where the circulation path is different, signage complying with 4.30.1, 4.30.2, 4.30.3, 4.30.5, and 4.30.7(1) shall be provided to indicate direction to and identify the accessible entrance and accessible route.

(2) In lieu of compliance with 4.1.3(8), at least one entrance to each station shall comply with 4.14, Entrances. If different entrances to a station serve different transportation fixed routes or groups of fixed routes, at least one entrance serving each group or route shall comply with 4.14, Entrances. All accessible entrance shall, to the maximum extent practicable, coincide with those used by the majority of the general public.

(3) Direct connections to commercial, retail, or residential facilities shall have an accessible route complying with 4.3, Accessible Route, from the point of connection to boarding platforms and all transportation system elements used by the public. Any elements provided to facilitate future direct connections shall be on an accessible route connecting boarding platforms and all transportation system elements used by the public.

(4) Where signs are provided at entrances to stations identifying the station or the entrance, or both, at least one sign at each entrance shall comply with 4.30.4 and 4.30.6. Such signs shall be placed in uniform locations at entrances within the transit system to the maximum extent practicable. EXCEPTION: Where the station has no defined entrance, but signage is provided, then the accessible signage shall be placed in a central location.

(5) Stations covered by this section shall have identification signs complying with 4.30.1, 4.30.2, 4.30.3, and 4.30.5. Signs shall be placed at frequent intervals and shall be clearly visible from within the vehicle on both sides when not obstructed by another train. When station identification signs are placed close to vehicle windows (i.e., on the side opposite from boarding) each shall have the top of the highest letter or symbol below the top of the vehicle window and the bottom of the lowest letter or symbol above the horizontal mid-line of the vehicle window.

(6) Lists of stations, routes, or destinations served by the station and located on boarding areas, platforms, or mezzanines shall comply with signage requirements 4.30.1, 4.30.2, 4.30.3, and 4.30.5. A minimum of one sign identifying the specific station and complying with 4.30.4 and 4.30.6 shall be provided on each platform or boarding area. All signs referenced in this paragraph shall, to the maximum extent practicable, be placed in uniform locations within the transit system.

(7)* Automatic fare vending, collection and adjustment (e.g., add-fare) systems shall comply with 4.34.2, 4.34.3, 4.34.4, and 4.34.5. At each accessible entrance such devices shall be located on an accessible route. If self-service fare collection devices are provided for the use of the general public, at least one accessible device for entering, and at least one for exiting, unless one device serves both functions, shall be provided at each accessible point of entry or exit. Accessible fare collection devices shall have a minimum clear opening width of 32 in; shall permit passage of a wheelchair; and, where provided, coin or card slots and controls necessary for operation shall comply with 4.27, Controls and Operating Mechanisms. Gates which must be pushed open by wheelchair or mobility aid users shall have a smooth continuous surface extending from 2 inches above the floor to 27 inches above the floor and shall comply with 4.13, Doors. Where the circulation path does not coincide with that used by the general public,

accessible fare collection systems shall be located at or adjacent to the accessible point of entry or exit.

(8) Platform edges bordering a drop-off and not protected by platform screens or guardrails shall have a detectable warning. Such detectable warnings shall comply with 4.29.2 and shall be 24 inches wide running the full length of the platform drop-off.

(9) In stations covered by this section, rail-to-platform height in new stations shall be coordinated with the floor height of new vehicles so that the vertical difference, measured when the vehicle is at rest, is within plus or minus 5/8 inch under normal passenger load conditions. For rapid rail, light rail, commuter rail, high speed rail, and intercity rail systems in new stations, the horizontal gap, measured when the new vehicle is at rest, shall be no greater than 3 in. EXCEPTION: In light rail, commuter rail and intercity rail systems where it is not operationally or structurally feasible to meet the horizontal gap or vertical difference requirements, mini-high platforms, car-borne or platform-mounted lifts, ramps or bridge plates, or similar manually deployed devices, meeting the applicable requirements of 36 C.F.R. part 1192, or 49 C.F.R. part 38 shall suffice.

(10) Stations shall not be designed or constructed so as to require persons with disabilities to board or alight from a vehicle at a location other than one used by the general public.

(11) Illumination levels in the areas where signage is located shall be uniform and shall minimize glare on signs. Lighting along circulation routes shall be of a type and configuration to provide uniform illumination.

(12) Text Telephones: The following shall be provided in accordance with 4.31.9:

(a) If an interior public pay telephone is provided in a transit facility (as defined by the Department of Transportation) at least one interior public text telephone shall be provided in the station.

(b) Where four or more public pay telephones serve a particular entrance to a rail station and at least one is in an interior location, at least one interior public text telephone shall be provided to serve that entrance. Compliance with this section constitutes compliance with section 4.1.3(17)(c).

(13) Where it is necessary to cross tracks to reach boarding platforms, the route surface shall be level and flush with the rail top at the outer edge and between rails, except for a maximum 2-1/2 inch gap on the inner edge of each rail to permit passage of wheel flanges. Such crossings shall comply with 4.29.5. Where gap reduction is not practicable, an above-grade or below-grade accessible route shall be provided.

(14) Where public address systems are provided to convey information to the public in terminals, stations, or other fixed facilities, a means of conveying the same or equivalent information to persons with hearing loss or who are deaf shall be provided.

(15) Where clocks are provided for use by the general public, the clock face shall be uncluttered so that its elements are clearly visible. Hands, numerals, and/or digits shall contrast

with the background either light-on-dark or dark-on-light. Where clocks are mounted overhead, numerals and/or digits shall comply with 4.30.3. Clocks shall be placed in uniform locations throughout the facility and system to the maximum extent practicable.

(16) Where provided in below grade stations, escalators shall have a minimum clear width of 32 inches. At the top and bottom of each escalator run, at least two contiguous treads shall be level beyond the comb plate before the risers begin to form. All escalator treads shall be marked by a strip of clearly contrasting color, 2 inches in width, placed parallel to and on the nose of each step. The strip shall be of a material that is at least as slip-resistant as the remainder of the tread. The edge of the tread shall be apparent from both ascending and descending directions.

(17) Where provided, elevators shall be glazed or have transparent panels to allow an unobstructed view both in to and out of the car. Elevators shall comply with 4.10.
EXCEPTION: Elevator cars with a clear floor area in which a 60 inch diameter circle can be inscribed may be substituted for the minimum car dimensions of 4.10.

(18) Where provided, ticketing areas shall permit persons with disabilities to obtain a ticket and check baggage and shall comply with 7.2.

(19) Where provided, baggage check-in and retrieval systems shall be on an accessible route complying with 4.3, and shall have space immediately adjacent complying with 4.2, Space Allowance and Reach of Range. If unattended security barriers are provided, at least one gate shall comply with 4.13, Doors. Gates, which must be pushed open by wheelchair or mobility aid users, shall have a smooth continuous surface extending from 2 inches above the floor to 27 inches above the floor.

5.9 CAR BODY STRUCTURAL INTEGRITY AND CRASHWORTHINESS

Structural integrity refers to the ability of the maglev vehicle structural components to function properly and reliably when operating within the specified design limits during normal loading conditions and under abnormal operations. Crash worthiness refers to the ability of the vehicle to resist extreme structural deformations and the separation of structural components under extraordinary conditions, such as a collision.

Maglev vehicle components that transmit loads for suspension, levitation, guidance, braking or propulsion have been designed to be subjected to higher loading. These components include levitation and guidance magnets, brakes, couplers between maglev vehicles (sections) and towing point attachments, lifting points, guiding skids, elements of linear motor and secondary suspension structure, and linkage. The attachment, mounting and structural strength of these components are critical for safety. As in conventional rail cars, the coupler between maglev vehicles will withstand the significant loads associated with the tensile and compressive forces in propulsive and braking modes acting on each vehicle during normal operations.

Crash worthiness has been developed as a critical means of minimizing the extent of vehicle damage and personal injury in three types of situations:

- Collision with solid objects,
- Unintended contact between the maglev vehicle and its guideway,

- Separation of the vehicle from the guideway.

Crash worthiness of a vehicle depends on the ability to manage the dissipation of kinetic energy and to control the rate at which the speed is reduced (deceleration, in g units).

Vehicle damage could occur as a result of contact-impact between the maglev vehicle and the guideway, other maglev trains, equipment or parts that may fall off a maglev vehicle, construction or maintenance structures, birds and other animals and trees, rock or other objects.

One type of vehicle guideway interaction could be the scraping of the magnets against the guideway functional components. This type of impact could occur if the levitation and guide magnets are unable to maintain the proper gap. Gap variation and magnet-to-guideway contact may also result from the dynamic interaction between the vehicle and irregularities in the guideway. Another source of unintended vehicle-guideway contact may be instability caused by aerodynamic forces, such as wind and air pressure variation caused by passing vehicle, tunnel entry and exit, or other surrounding structures, if the levitation and guidance systems are not able to bear the respective loads.

Previous work done by CHSST on the qualification of the HSST 100 type vehicle for passenger service in Japan indicated that the vehicle and all systems are designed to resist instability caused by aerodynamic forces. For example, lateral displacement of magnet/module of 100L by side wind only is estimated as follows:

Wind Speed	Lateral Travel of magnet
15 m/sec	3.4 mm
25 m/sec	9.3 mm

Designed lateral gap between magnet lateral skid shoe and rail is 15 mm.

If vehicle runs on curvature in excess centrifugal force of 0.075g, lateral displacement is calculated to be 5 mm. Lateral fluctuation expected in normal run condition caused by rail irregularity is estimated to be 3.5 mm. Total lateral displacement, if above three (wind speed 25m) occurs simultaneously, is 17.8 mm.

In such case, since lateral displacement is limited to 15 mm, lateral magnet shoes support excess lateral force. Contact between the magnet shoes and rail generate no damage or problem to running vehicle.

The maglev module wraps around the guideway in a manner that effectively captures the guideway. Thus the vehicle can separate from and leave the guideway only when there is a structural break or an open guideway switch. Conditions that can cause the vehicle or its compartment to leave the guideway include a structural failure of a critical attachment point that joints the compartment with the wraparound frame, a collision that damages the wraparound frame, or an inertial force that tears the compartment from the wraparound frame.

Earlier analyses conducted on the HSST-100S vehicle model demonstrated that the scenario of vehicle separation from the guideway is not possible due to redundancy in lateral guidance and structural design capable of bearing such loads.

5.9.1 Applicable U.S. Safety Requirements

The FRA for rolling stock fleets under its jurisdiction promulgates mandatory structural and crashworthiness requirements for rail rolling stock. The FRA requirements are not likely to apply to slow-speed maglev vehicles such as the CHSST 100 (S, L or similar) operating in an urban transit intra-city service, on an exclusive, grade-separated, right-of- way (ROW) that is not connected to the general railroad network. The review of FRA requirements herein is done to survey the possible spectrum of design improvements which are currently not mandatory but may be considered as enhancements in the future, as applicable, in an application of the CHSST-100 maglev vehicle technology in the U.S. Design guidelines contained in the ASCE Automated People Mover Standards, including vehicle structural design and crashworthiness standards, in ASCE APM Standards, Part 2, were reviewed and used as a benchmark for evaluating compliance of the current CHSST 100L vehicle. An assessment of compliance of the 100L vehicle performance with U.S. requirements was presented in FTA Maglev Chapter no. 2 by the MUSA team.

The FRA specifies structural design requirements for MU locomotives in 49 CFR, Part 229.141. This part specifies the structural design strength by requiring the locomotive body to resist a specified minimum static end load without permanent deformation of the body structure. To address the hazard of coupler separation, the FRA requires that the anti-climbing arrangement be designed to resist a specified vertical load. To protect against end impacts of locomotives, the FRA requires installation of a vertical member capable of resisting a specified shear force at the under frame attachment point to prevent overriding. In addition, the FRA requires that the truck be locked to the body to provide a specified shear strength.

Coupler requirements are contained in 49 CFR, Part 229.61 which specifies various conditions for couplers, including dimensional limits, and provisions for limiting or dissipating excessive slack, providing for anti-creep protection and guarding against loss of draw bar and connection pins. Part 229.61 also requires that the couplers be free of specified defects.

North American requirements for rolling stock under FRA jurisdiction are summarized as follows:

	For trains above 600,000 lbs	**For trains below 600,000 lbs**
Buff Load	800,000 lbs	400,000 lbs
Collision post (2 of each) (30” above floor level)	300,000 lbs	200,000 lbs
Truck to body connection	250,000 lbs	150,000 lbs
Coupler vertical	100,000 lbs	75,000 lbs

49 CFR Part 223 and 238.421 specify that glazing materials used in locomotive and passenger car end- and side- windows meet certain impact resistance limits as has been certified by the glazing manufacturer, i.e., windshields and other end-facing locations FRA Type I, side-windows FRA Type II.

49 CFR Part 238.113 specifies that all FRA-regulated passenger cars must have a minimum of four emergency window exits, either in a staggered configuration or with one located at each end

of the car. This requirement is not implemented in urban rail rapid transit rolling stock fleets that are not regulated by the FRA.

49 CFR, Part 229.123 requires that locomotives be equipped with pilots, snowplows, or end plates to clear obstructions off the track.

Section A Ill, Passenger Car Requirements of AAR Manual of Standards and Recommended Practices contains structural requirements- for railroad passenger cars.

5.9.2 Foreign and International Requirements

The primary UIC (International Union of Railways) document concerned with the strength of passenger vehicles is Code *566,* Load Cases, which specifies that a rail vehicle must be capable of sustaining certain loads without permanent deformation. These loads are listed as follows:

- Buff load (compression) 449,000lbs
- Buff load (tension) 337,000 lbs
- Buff load (diagonal) 1 12,000 lbs
- Compression load at 14" above buff 112,000 lbs
- Compression, center rail 67,000 lbs
- Compression, cant rail 67,000 lbs

The vehicle body must also meet the following requirements:

- The coach body must sustain an evenly distributed load of 1.3 times the total vehicle weight plus a 200 percent passenger load, at 176 lb per passenger, in combination with a 449,000 lbs compressive load without permanent deformation.

- The body assembly should form a tubular beam. The end walls of the body shall be strengthened by anti-collision pillars that join the under frame to the vehicle walls and roof to distribute collision loads through the structure.

- Body natural frequencies in all load conditions should be sufficiently separated from bogie hunting and pitching frequencies to avoid resonance.

UIC Code 651, Layout of Driver Cabs, specifies that locomotives and cab vehicles must meet the longitudinal strength requirements specified in Code 566. In addition, the operator's compartment should be surrounded by structure stronger than the structure ahead and behind the cab, to reduce the risk of crushing of the occupied space in a collision.

UIC Code 515, Coach Running Gear, Paragraph 2.6.2 specifies that the bogie (truck) to body connection must be able to sustain the following forces:

- Vertical force equal to 1.3 x maximum static vertical load on the bogie from the body.
- Lateral force equal to 0.3 x maximum static vertical load on the bogie from the body.
- Longitudinal force equal to that produced when the bogie is subjected to a 5g acceleration.

UIC Code 651 provides glazing requirements for forward facing windows. The window shall sustain an impact from a 1 kg standard projectile at a speed of 160 km/h, added to the maximum

speed of the vehicle in which the windows are installed. This requirement is intended to protect against an object thrown or being detached from a train traveling in the opposite direction.

Safety glass must be used for side windows and any internal glazing. Safety glass is defined as type of glass that, when is broken, does not produce sharp edged fragments capable of causing injury. All windows must bear a permanent marking certifying the performance standard to which they have been manufactured.

5.9.3 Summary of Approach to Structural Integrity in Maglev Vehicles

Structural integrity of the vehicle depends on properly identifying loads that the maglev vehicle is expected to experience while in service and by specifying vehicle design and construction, which will enable the vehicle to safely resist these loads. One unique feature of the maglev vehicle is that the structural design is similar to that of an aircraft, and would not be able to withstand the compression load, collision post load or other loads related to conventional railroad vehicles. However, it is unlikely for the maglev vehicle to encounter as severe loads as that of a conventional railroad. For a maglev vehicle operating on a dedicated guideway without at-grade crossings, the risk of collision with other types of vehicles does not exist. In addition, the probability of "head-on" collisions with the same type vehicle is negligible if effective collision avoidance systems and procedures (Automatic Train Control, Automatic Train Protection and fail-safe signaling system) are used. Furthermore, as a result of levitation and absence of classic "wheel-rail" contact, dynamic impact loads are induced through the primary and secondary suspension system to the car body.

Other performance demands on the vehicle structure, such as rigidity, meeting weight limitations and provision of temperature and noise isolation are not safety requirements, but meeting them is critical to overall maglev system safety. For example, weight limitations must be observed to avoid imposing excessive loads on the guideway.

Based upon previous discussion there are four (4) issues identified as critical regarding to maglev vehicle structure:

- The specification of load cases,
- Design and manufacture of the vehicle structure to ensure that the structure can sustain the expected loads without catastrophic or premature failure,
- The specification of structural performance requirements in collisions,
- Proof of performance.

These structural integrity issues have been addressed early in the development and qualification process of the CHSST 100-series vehicles and have been documented in earlier work on the CHSST 100 S vehicle using a married-pair as minimum operable consist and a 4-car train configuration for revenue service. Among the key differences between the 100S and 100L vehicle is the shorter length of the 100S vehicle and the proportionately fewer levitation and propulsion modules (6 modules on the 100S, versus 10 modules on the 100L), and the minimum operable train consist of 3-car train-set for the HSST 100L.le.

5.9.4 Structural Capabilities of the CHSST 100 Vehicles (100S and 100L)

5.9.4.1 CHSST 100S Vehicles

Appendix C contains a discussion of the approach to load cases, car body structural integrity, levitation and propulsion module structure, design and manufacture standards, collision performance, glazing requirements, coupler requirements and pilots and snowplow requirements for the CHSST 100- type vehicles. **Appendix C** also describes structural characteristic of the CHSST 100S vehicle relative to exiting rapid transit vehicles such as automated people movers. It is anticipated that the HSST 100-series vehicles in a U.S. application will meet or exceed the U.S. vehicle structural design and crashworthiness requirements specified by the ASCE APM standards, Part 2.

5.9.4.2 CHSST 100L Vehicles

The following is a summary of strength and rigidity characteristics and basic conditions of the CHSST 100L vehicle as it is designed for the TOBU-KYURYO. It includes characteristics of the car body and module, and provides summary tables for:

- Car Body Load
- Car Body Design Load - Fatigue
- Car Body Design Load - Limit Load (Yield or Tensile Strength/ 1.5)

Strength and Rigidity Basic Condition of Car Body

This subsection summarizes the current structural design assumptions, allowances and criteria used for the HSST 100L car body during vehicle structural and crashworthiness design and analysis, for the proposed TOBU-KYURYO in Nagoya, Japan.

It should be noted that certain weight assumptions made herein reflect conservative weight values for load calculation purpose, intended to portray worst case loads and not actual nominal loads.

1. The maximum allowable vehicle total weight for structural load calculations is assumed to be 28,750 kg/car. A train configuration of tree cars is assumed. The weight of a passenger in Japan is assumed to be 60 kg for load calculations.
2. The maximum upper spring car body weight is 22,750kg/car, derived from 28,750kg/car weight less the total minimum car modules weight of 6000kg. The upper spring empty car body weight is 10,500kg, representing the weight on the springs when the car is empty. It should be noted that for the structural analysis, the designer originally assumed maximum possible car body weight and minimum possible module weight for conservative reasons.
3. During normal vehicle operations, a wave shall not occur in the car body skin. A harmful, permanent deformation shall not occur during a fault, e.g., when the air spring breaks down.
4. When the crosswind of 50m/sec is experienced, a harmful, permanent deformation shall not occur.
5. The normal capacity load verifies the fatigue strength of the body.
6. The longitudinal load of the body is provided by the following:

6.1 Compression or tensile load between the front two cars (first car and middle car) when running with the rear two cars (rear car and the middle car) skids down.

6.2 The maximum of the train configuration is three cars. Friction coefficient of the skid is assumed to be 0.25.

7. The load when pulling a non-levitated 3-car train (when levitation is not possible) is considered. The use of emergency rollers (rolling friction coefficient 0.05), slope of 10%, and an acceleration of 0.02G for a 3-car train weighing 86.25 tons (28.75 tons x3) are assumed.
8. A harmful, permanent deformation shall not occur by the longitudinal impact compression load of 38 tonf or less.
9. The loading condition of the equipments above the floor level is the same as in a modern transit system.
10. The maximum acceleration of the equipments below the floor level is assumed to be ±0.3G longitudinally, ±1.0G vertically, and ±0.5G laterally.
11. The strength standard of the material is the smaller value of either the strength standard of the yield strength or the tensile strength divided by 1.5.
12. The material fatigue is considered for normal operation load.
13. Lifting up of the vehicle is performed at six jacking points.
14. The strength data for parts such as wire cable, ball bearing, and the roller bearing, etc. is based on guaranteed strength or endurance value by their manufacturer.
15. Air pressure and oil pressure parts must endure the pressure 1.5 times the maximum allowable working pressure.
16. The design life objective of the car body structure assumes car running cycles of 15 times/hr, cumulative lifetime running hours of 120,000 hours (assuming 16hr/day), or the equivalent of 2,000,000 running cycles during 20 years. A running cycle consists of start-up, levitation, acceleration, braking, etc.
17. The car body structure is assumed to be an aluminum welding semi-monocoque structure.

Strength and Rigidity Basic Condition of the Module

This subsection summarizes the current structural design assumptions, allowances and criteria used for the HSST 100L module for purposes of vehicle structural and crashworthiness design and analysis, for the proposed TOBU-KYURYO in Nagoya, Japan.

1. The maximum mass of each module is assumed to be 660 kg. It should be noted that the actual module weight is approximately 650kg, but for the structural calculation of module structure, the designer conservatively assumed maximum module weight of 660 kg.
2. The car body load received by a single module is assumed to be 2,275 kg (=(28750-6000)/10). To maximize the calculated load received by a single module, a conservative minimum module weight of 600 kg is used.
3. When the magnet generates the levitation force of 1,000 kg/m, the displacement of the magnet center position by the deflection of the module structure is assumed to be 1.0 mm or less.
4. The skid impact load in case of a module drop on the rail during levitation failure is 2,700 kg/skid. This skid impact load may occur following magnet adhesion

(clinging) to the rail due to magnet control circuit failure and then module drop on the rail due to magnet current protection circuit interrupting the current. The impact load is generated at the instance the module dropped on the rail.

5. The magnet clinging force between the magnet pole and the rail pole in case of magnet control circuit failure is 15,500 kg/skid, applied to the magnet pole skid, and the friction coefficient of the magnet pole skid is assumed to be 0.125.
6. The skid impact load due to magnet pole clinging to rail pole and subsequent drop of magnet in each module is assumed to occur separately, based on the system configuration.
7. The vertical acceleration load, in case of running on the ground, is assumed to be 0.2 G on the springs, and 1.0 G as module acceleration. The lateral acceleration load is assumed to be 0.2G on the springs, and 0.5G as module acceleration.
8. The vertical acceleration load in case of levitated running is assumed to be 0.15 G on the springs and 0.3 G as module acceleration. The lateral acceleration load in levitated running is assumed to be 0.1G on the springs, and 0.2G as module acceleration.
9. Fatigue from the load-difference between landing and levitating is considered.
10. The life of the module structure is same as the car body structure.

Summary of Car Body Loads

The following **Table 5-6** is a summary of Car body loads of the CHSST 100L vehicle as it is designed for the TOBU-KYURYO. It provides summary tables for:

- Car Body Load
- Car Body Design Load - Fatigue
- Car Body Design Load - Limit Load (Yield or Tensile Strength/ 1.5)

The data includes, load condition, load direction, load value, Loading Point, and remarks, as applicable.

A. Car Body Load Summary

Assumption:	Max. Car Body Wt.	28,750 kg
	Max. Upper Spring Car Body Wt.	22,750 kg
	Empty Car Body Wt.	16,500 kg
	Empty Upper Spring Car Body Wt.	10,500 kg

Table 5- 6 Summary of Car Body Waits

Load Condition	Load Direction	Load Value	Loading Pt.	Remarks
Levitated Running	Vertical Lateral Longitudinal	1±.15G (2,275±341 kg/m) ±.1G (±228 kg/m) ±.3G (±683 kg/m)	Car Body (Slide Table) Car Body (Lateral Cont Sys Rod) Car Body	
	Vertical	1±.2G	Car Body	

Load Condition	Load Direction	Load Value	Loading Pt.	Remarks
Running on Ground	Lateral Longitudinal	(2,275±455 kg/m) ±.2G (±455 kg/m) ±.3G (±683 kg/m)	(Slide Table) Car Body (Lateral Rod) Car Body (Thrust Rod)	
Cross Wind	Wind Pressure Vertical Lateral	250 kg/m^2 2,215 kg 1,900 kg	Side Body Slide Table Link • Crank	(= 9500 kg/5)
Magnetic Pole Clinging to Rail and Drop	Lateral Longitudinal	0.08 G 0.2 G	Car Body Car Body	
Module Drop	Longitudinal	0.129 G	Car Body	
Air suspension Malfunction • Stopping at Vertical Curvature • One System Failure	Bending Bending Twist	0 t•m -12.2 t•m 7.11 t•m -5.7 t•m 4.45 t•m	Car Body Car Body Car Body	
Pulling	Longitudinal (Tension)	13 Ton	Coupler	
Lifting (6Pt. Support)	Vertical Bending Twist	3.72/2 ton -1.98 ton • m 4.6 ton • m	Lifting Hook Car Body Car Body	(10.5 ton • 17/48)/2
Ground Transportation	Vertical Lateral Longitudinal	1 ±.2 G ±.2 G ±.3 G	Car Body Car Body Car Body	

Load Condition	Load Direction	Load Value	Loading Pt.	Remarks
Impact Load	Longitudinal (Compression)	38.3 ton (Ultimate)	Collision Bar/Coupler	In case of collision with car stopper at 5 km/hr, deceleration should be 0.23G or less.

Note 1: The body bend moment is in the direction, which becomes convex. (+), and the direction where the body becomes concave (-).

B. Car Body Design Load - Fatigue

No.	Load Direction	Load Value	Loading Pt.	Remarks
1	Vertical	1± 0.15 G (2,275±341)/2 kg/ea (2,275±341)/2 kg/ea	Car Body No.1,2,11& 12 Slide Table No.3~10 Slide Table	(28,750-6000)/10=2275
2	Lateral	± 0.1G ±230 kg/ea ±455 kg/ea	Car Body No.1, 2, 11 & 12 Slide Table Lateral Rod No.3~10 Slide Table Lateral Rod	22,750x0.1/10=227.5 rounded to 230 227.5 x 2=455
3	Longitudinal	±0.3G ± 685 kg/ea 6,850 kg/ea	Car Body Thrust Link Coupler	22,750x0.3=6825 rounded o 6850

C. Car Body Design Load - Limit Load (Yield, or Tensile Strength/1.5)

No.	Load Direction	Load Value	Loading Pt.	Remarks
1	Vertical	2,185 kg/ea 7,010kg/ea 3,500 kg/ea 1,570 kg/ea	No.1, 2 11& 12 Slide Table No.3 ~10 Slide Table Lifting Pt. Sling Cable (Slide Table)	Abnormal condition (1 support cable failure).

2	Lateral	950 kg/ea 1,900 kg/ea	No.1,2 11& 12 Slide Table Lateral Rod No.3 ~10 Slide Table Lateral Rod	=9,500/10 =9,500/5
3	Longitudinal	1,890 kg/ea 38,300 kg (Compr.) 36,800 kg (Tension)	Thrust Link Coupler	
4	Twist	4,600 kg•m	Car Body	
5	Bending	7,110 kg•m -12,200 kg•m	Car Body	
6	Wind Pressure	250 kg/m^2	Car Body	Wind speed 50 m/s

Note: In the case of lifting car body, hoisting direction allowance of vertical (90 degrees) ±30 degrees is considered.

5.10 VEHICLE FIRE SAFETY CHARACTERISTICS

5.10.1 Fire Retardation and Suppression Requirements

Flammability requirements of the present HSST-100L vehicle are based on the Japanese ministerial ordinance of flammability requirements, known as "A-A Standard", issued by the (former) Japanese Ministry of Transport. A similar standard to the A-A standard is already adopted in the regulations of railroad transportation.

All material used in HSST-100L are evaluated and certified by Classification & Test Method of A-A Standard.

The latest flammability requirements in the "A-A Standard" were promulgated in 1973 and apply to new vehicles manufactured after 1973 in Japan. Under the A-A standard, vehicle material flammability is described in terms of one of three categories reflecting the material degree of resistance to flame as follows:

1) Non Flammable (Incombustible)
2) High Resistant to Flame
3) Resistant to Flame

The flammability categories apply to the various groups of materials that make up the rolling stock vehicle as follows:
1) Non Flammable (Incombustible)
This category applies to the vehicle outside skin; interior lining/ceiling; partition; floor and under floor structure; Insulation; seat structure; equipment cover.

2) High Resistant to Flame
This category applies to cover for wiring and connecting wires and cover for lead wiring from main circuit.

3) Resistant to Flame
This category applies to upholstery/cushion of seat; diaphragm; shade; cover for covered wire; Insulation for electric power; non-metallic materials or parts.

5.10.1.1 A Standard Test Method and Evaluation of Flammability Classification

Test Method: The test method of non-metallic material for railroad vehicle is as shown in the following sketch. A test specimen (B5 Size – 182 x 257 mm) is supported at the 45 degrees slope on a rack having low thermal conductivity, and will be placed on the flame keeping within a vertical distance of 25.4 mm (1 inch) between the bottom center of Alcohol receptacle and the center of lower surface of test specimen. The fuel receptacle contains 0.5 cc Alcohol, which is ignited and left to burn out. The material resistance to fire is investigated during and after the combustion of Alcohol. The test specimen material is judged based on test observation of attributes such as specimen ignition, flaming, smoking, both during and after alcohol combustion. Conditions in the test room are as follows:
Temperature: 15°C - 30°C; Humidity: 60% - 75%, No air flow

Sketch of Test Method

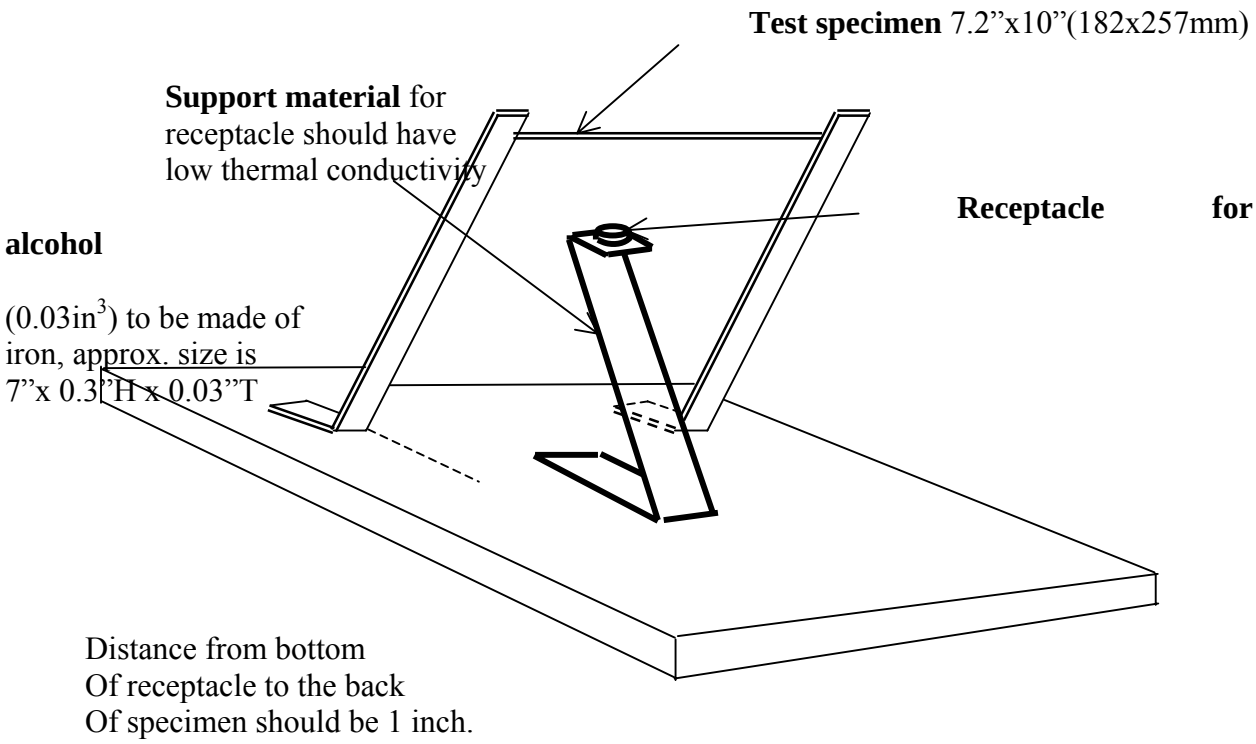

Table 5- 7 Evaluation of Flammability Classification

Classifi -Cation	Condition during combustion of Alcohol				Condition after the combustion of Alcohol			
	Ignition	Burn with flame	Smoke	Flame Force	Remaining Flame	Remaining cinders	Carboni -Zation	Deformation
Non Flammable	None	None	Very Small	—	—	—	Change Of color Below 4”	Surface Deformation bellow 4”
High Resistant To flame	None	None	Small	— Or Weak	None	None	Ref to Note 2	Deformation less than 6”
Resistant To flame	Yes	Yes	Small	Ref to Note 1	None	None	Reach up to the upper edge of specimen	Ref to Note 3

Note: 1. Does not cross over the edge of test specimen.
2. Does not reach the upper edge of specimen or less than 6”.
3. Deformation reaches the upper edge and makes partial thru-hole.

5.10.2 Materials used on HSST-100L / -100S Vehicles vs. Flammability Requirements

Table 5-7 depicts side-by-side the materials used in the existing Japanese HSST 100L and 100S vehicles and their current classification of flammability based on the existing categories of flammability in the Japanese A-A Standard (Combustibility Standard for Materials Used for Railway Vehicles).

It should be noted that the materials currently installed in the existing HSST 100L and 100S are not systematically subjected to the same tests as are currently specified in the U.S. standards such as NFPA 130, Standard for Fixed Guideway Transit and Passenger Rail Systems, 2000 Edition. For example, Table 5-2.4 in NFPA 130, 2000 edition, specifies test procedures and minimum performance requirements for testing the flammability and smoke emission characteristics of rail transit vehicle materials in U.S. application. To illustrate the required U.S. tests and performance criteria, Table 5-1 therefore, also shows side-by side the test procedures and performance criteria required by NFPA 130 (2000 edition) for each material to be used on the HSST 100L vehicle in a U.S. application, listed by material category and function. In order to meet the testing and certification requirements for a U.S. application of the HSST 100L vehicle, the car builder will procure the materials for the maglev vehicles from vendors with U.S. industry experience, whose car materials are have been certified to be compliant with U.S. flammability and smoke emission standards. This is currently the practice with rail transit vehicles built by Japanese car builders for U.S. transit applications, where all the car materials are provided by vendors whose materials comply with NFPA 130 test procedures and minimum performance requirements for testing the flammability and smoke emission characteristics of rail transit vehicle materials. Of particular interest will be the floor tests to U.S. standards such as ASTM E-119. From similar tests conducted in Japan on the 100L vehicle, it is anticipated that the current floors constructed in the 100L vehicles in Japan will pass the minimum performance requirements for structural flooring assemblies during the minimal test period of 15 minutes required by NFPA 130 under test method ASTM E 119. However, the structural floor tests as well as the other material tests in Table 5-1 must be performed systematically for a U.S. application of the 100L vehicle, or, where applicable, be certified through the use of compliant, test-certified materials in conformance with the specified tests methods and performance criteria in NFPA 130. The floor test will need to be conducted on the actual floor specimen to be used in a U.S. application. It is important to verify that the dimensions and cross section of the floor specimen to be tested represent a true measure of the floor's ability to perform as a barrier against under-car fire. Penetrations (e.g., duct, etc.) must be designed against acting as conduits for fire and smoke. It is imperative that any redesign of the floor in a U.S. application as a result of weight-reduction design improvements, improved EMI/EMF shielding, or due to structural integrity and loading modifications to the vehicle floor in a U.S. application of the 100L vehicle, will be accompanied by testing of the actual true representative floor specimen, reflecting a true test of the floor's ability to perform as a barrier against under-car fire when subjected to test per ASTM E 119 test method.

Additionally, in a U.S. application, data on the combustible fuel load of material used on the vehicle will be collected and tabulated for individual materials in terms of fuel load, heat release rate, smoke release rate along with data on material volume, weight, exposed surface areas, and spatial relations. This will enable the modeling of vehicle "design fire" as well as modeling of

vehicle fire growth and the propensity of initial ignition sources to propagate, self-sustain and reach flashover and become a fully-involved vehicle fire. Such fire data, which is currently not collected or analyzed for the existing HSST 100 vehicles in Japan, will be collected for a U.S. application of the vehicles and allow a quantitative fire risk assessment of the 100L vehicle as a function of fuel load, exposed surface areas, spatial relationships, heat and smoke release rates for the combustible materials on the vehicle.

Table 5-8 Materials used on HSST-100L / -100S Vehicles vs. Flammability Requirements

Materials / Goods used on HSST-100L / -100S vs. Flammability Requirements. (Current materials used in HSST-100L and 100S are not yet certified under U.S. requirements in NFPA 130.)

A-A Standard Flammability Classification	Materials / Goods to be used on HSST-100L / -100S cars	Category	Function of Material (Ref. Notes per U.S. NFPA 130)	ence : NFPA's 130 (2000 Edition) Test Procedures and Minimum Performance and Smoke Emission Characteristics of Rail Transit Vehicle Materials		
				Test Procedure	Performance Criteria	Note (Apply to NFPA Requirements)
Resistant to Flame	Urethane	Seating	Cushion (Ref. Note 1,2,5,9)	ASTM D-3675	Is ≤ 25	1. Materials tested for surface flammability shall not exhibit any flaming running or flaming dripping. 2. The surface flammability and smoke emission characteristics of a material shall be demonstrated to be permanent by washing, if appropriate, according to Federal Test Method Standard 191A, Textile Test Method 5830. 3. The surface flammability and smoke emission characteristics of a material shall be demonstrated to be permanent by dry-cleaning, if appropriate, according to ASTM D 2724. Materials that cannot be washed or dry-cleaned shall be so labeled and shall meet the applicable performance criteria after being cleaned as recommended by the manufacturer. 4. For double window glazing, only the interior glazing shall meet the material requirements
				ASTM E-662	Ds(1.5) ≤100; Ds(4.0) ≤175	
Non Flammable	Metal (Aluminum or Stainless Steel)		Frame (Ref. Note 1,5,8)	ASTM E-162	Is ≤ 35	
				ASTM E-662	Ds(1.5) ≤100; Ds(4.0) ≤200	
Resistant to Flame	Plastic		Shroud (Ref. Note 1,5)	ASTM E-162	Is ≤ 35	
Non Flammable	Metal			ASTM E-662	Ds(1.5) ≤100; Ds(4.0) ≤ 200	
Resistant to Flame	Nylon-wool Moquette		Upholstery (Ref. Note 1,2,3,5)	FAR 25.853a (Vertical)	Flame Time ≤ 10 Sec Burn Length ≤ 6 inch	
				ASTM E-662	Ds(4.0) ≤200	
Non Flammable	Aluminum Sheet with Plastic Décor.	Panels	Wall (Ref. Note 1,5,10)	ASTM E-162	Is ≤ 35	
				ASTM E-662	Ds(1.5) ≤100; Ds(4.0) ≤200	
Non Flammable	Aluminum Sheet with Paint		Ceiling (Ref. Note 1,5,10)	ASTM E-162	Is ≤ 35	
				ASTM E-662	Ds(1.5) ≤100; Ds(4.0) ≤200	
Non Flammable	Aluminum Sheet with Plastic Décor.		Partition (Ref. Note 1,5,10)	ASTM E-162	Is ≤ 35	
				ASTM E-662	Ds(1.5) ≤100; Ds(4.0) ≤200	
Resistant to Flame	Not Applicable		Windscreen (Ref. Note 1,5)	ASTM E-162	Is ≤ 35	
				ASTM E-662	Ds(1.5 ≤100; Ds(4.0) ≤200	
Non Flammable	Aluminum		HVAC Ducting (Ref. Note 1,5)	ASTM E-162	Is ≤ 35	
				ASTM E-662	Ds(4.0) ≤100	
Non Flammable	Glass		Window (Ref. Note 4,5)	ASTM E-162	Is ≤ 100	
				ASTM E-662	Ds(1.5) ≤100; Ds(4.0) ≤200	
—	Not Applicable		Light Diffuser (Ref. Note 5)	ASTM E-162	Is ≤ 100	
				ASTM E-662	Ds(1.5) ≤100; Ds(4.0) ≤200	
Non Flammable	Aluminum	Flooring	Structure (Note 6)	ASTM E-119	Pass	
Resistant to Flame	Plastic Sheet		Covering (Note 7)	ASTM E-648	C.R.F. ≥ 0.5 w/cm^2	

Non Flammable	Formed Fiber Glass	Insulation	Thermal (Ref. Note 1,2,5)	ASTM E-162	Is ≤ 25	material requirements specified herein, the exterior need not meet those requirement. 5. ASTM E 662 maximum test limits for smoke emission (specific optical density) shall be measured in either flaming or non-flaming mode, depending on which mode generates
				ASTM E-662	Ds(4.0) ≤100	
Non Flammable			Acoustic (Ref. Note 1,2,5)	ASTM E-162	Is ≤ 25	
				ASTM E-662	Ds(4.0) ≤100	
Resistant to Flame	Plastic etc.	Misc.	Elastomers (Note 1,10)	ASTM E-542	Pass	
Non Flammable	Metal (Aluminum with Paint or Steel with paint or Stainless Steel)		Exterior Shell (Ref. Note 5)	ASTM E-162	Is ≤ 35	
				ASTM E-662	Ds(1.5) ≤100; Ds(4.0) ≤200	
Non Flammable			Comment Box Cover (Ref. Note 5)	ASTM E-162	Is ≤ 35	

				ASTM E-662	Ds(1.5) ≤100; Ds(4.0) ≤200	on which mode generates the most smoke. 6. Structure flooring assemblies shall meet the performance criteria during the normal test period determined by the transit agency. The normal test period shall not be less than 15 minutes. Only one specimen needs to be tested. A proportional reduction may be made in dimensions of the specimen provided that it represents a true test of its ability to perform as a barrier against under car fire. Penetrations (Duct etc.) shall be designed against acting as conduits for fire and smoke. 7. Carpeting shall be tested in accordance with ASTM E-648 with its padding, if the padding is used in actual installation. 8. Arm rests, if foamed plastic, are tested as cushions. 9. Testing is performed without upholstery. 10. Carpeting and elastomers installed on walls, ceilings, and partitions shall be considered wall and ceiling panel materials, respectively.

5.11 OPERATION AND MAINTENANCE STRATEGY

A preliminary plan for the Tobu-Kyuryo vehicle maintenance is shown below. This plan is based on the current maintenance standard for the conventional railways in Japan. As the HSST accumulates an operating experience, the standards may be relaxed in a future.

A - Preventive Maintenance

Exactly speaking, "daily inspection" is divided to two kinds of inspections, one is literally daily inspection and the other is the inspection whose interval is planed initially to be within every 3 days per train (and would be extended in future to 7 days).

The former one is pre-start/operation inspection conducted on the parking track and a certain place in depot on the track leading to the main line. Major part of this inspection is automatically done using TIMS (Train Information Management System) equipment and the time needed is estimated several to ten minutes or so.

The latter is called "Train Inspection" and includes visual inspections of major equipment, function tests of brake system equipment, and change of consumable parts such as brake/power collector shoes. This inspection/maintenance is conducted inside the car shed. Time needed to complete this is typically 4 personnel x 1.5 hr=6 Man Hours, however there would be flexible variations of "train inspection" schedule in the actual operation of the Tobu-Kyuryo Line.

Incidentally, Tobu-Kyuryo vehicle modules have no covers covering the side and bottom of modules except the only 4 leading and rear modules of a train which are required by the vehicle exterior styling designer.

For reference, typical plan of "Train Inspection" procedure is shown as **Figure 5-14**.

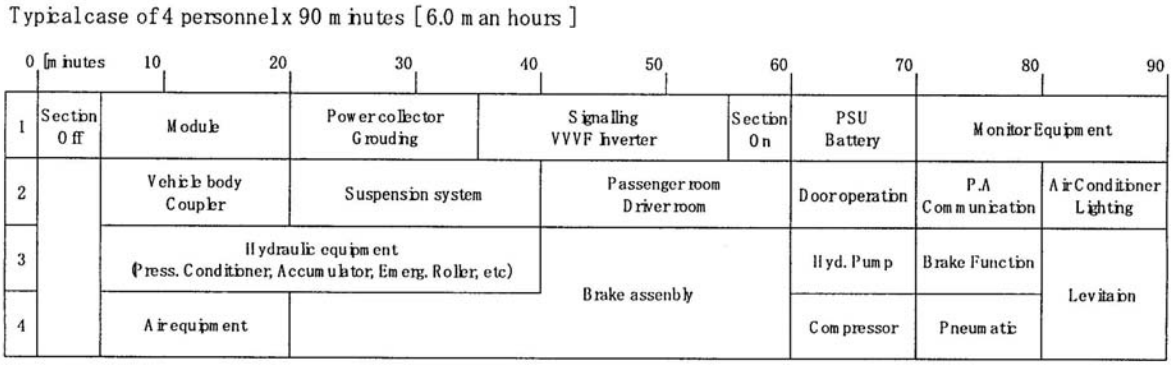

Figure 5-14 Train Inspection Schedule

3-month inspection/maintenance includes;

>Visual inspection of equipment as is onboard,
>Change of consumable parts,
>Function test of system/equipment by TIMS or manually,
>Self-diagnostic test using TIMS,

Time needed for this inspection/maintenance per one train is estimated
Inspection A 4 personnel x 330 minutes = 22 Man Hours
(for example for mechanical system)
Inspection B 4 personnel x 330 minutes = 22 Man Hours
(for example for electrical/electronic system)
in total 44 Man Hours.

These maintenance works are conducted by the personnel of Tobu-Kyuryo.
It is considered better in order to level the number of personnel needed for this work that whole inspection/maintenance work is divided into two parts/times like above compared to the whole maintenance at the same time.

A typical plan of 3-month inspection procedure is shown as **Figure 5-15**.

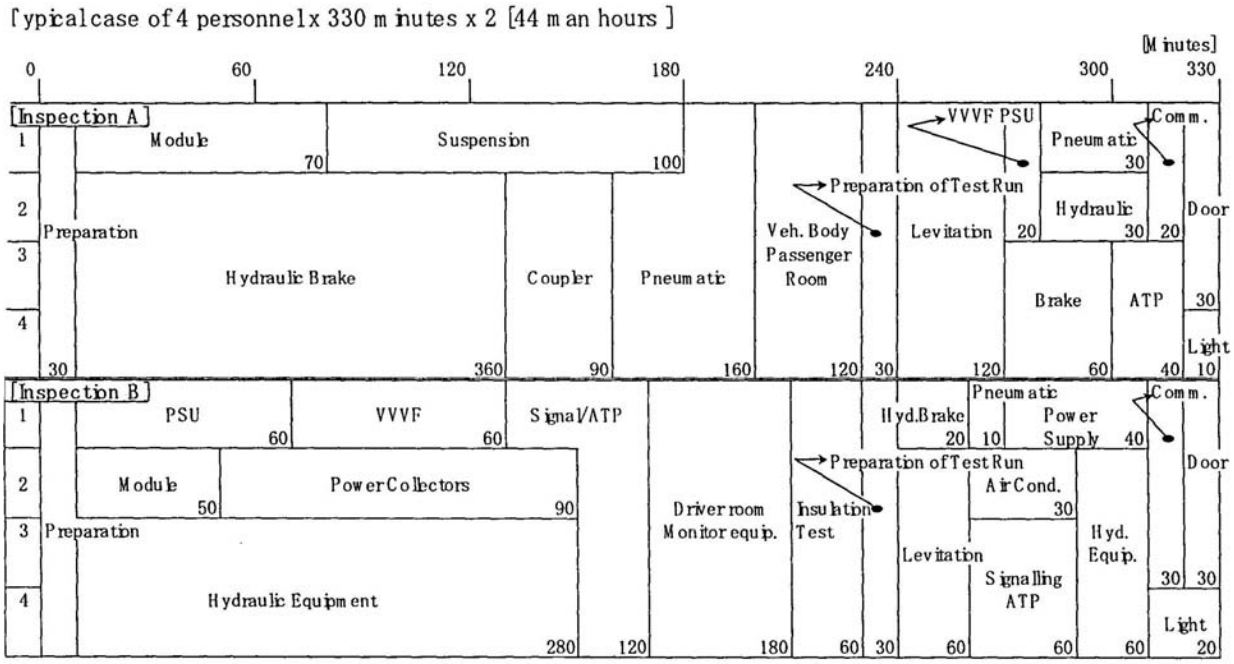

Figure 5-15 3-Month Inspection Schedule (Duration: 5.5 Hrs., Typical)

Time to complete the 3-year inspection or 6-year inspection is estimated roughly 40 days (2 months) for each. 3-year inspection is focused on safety related equipment and includes not only inspection/function test of equipment as are onboard, but also removal overhaul, installation and function tests. Part of this inspection/overhaul would be subcontracted to companies outside Tobu-Kyuryo operator. 6-year inspection/maintenance is focused on basically all equipment including 3-year inspection.

In order to level the maintenance work per month, the same consideration of the flexible division of this works as like the case of 3-month inspection, would be anticipated in actual practical maintenance plan of Tobu-Kyuryo operator.

For your reference, typical plan of 3-year and 6-year inspection is shown as **Figure 5-16**.

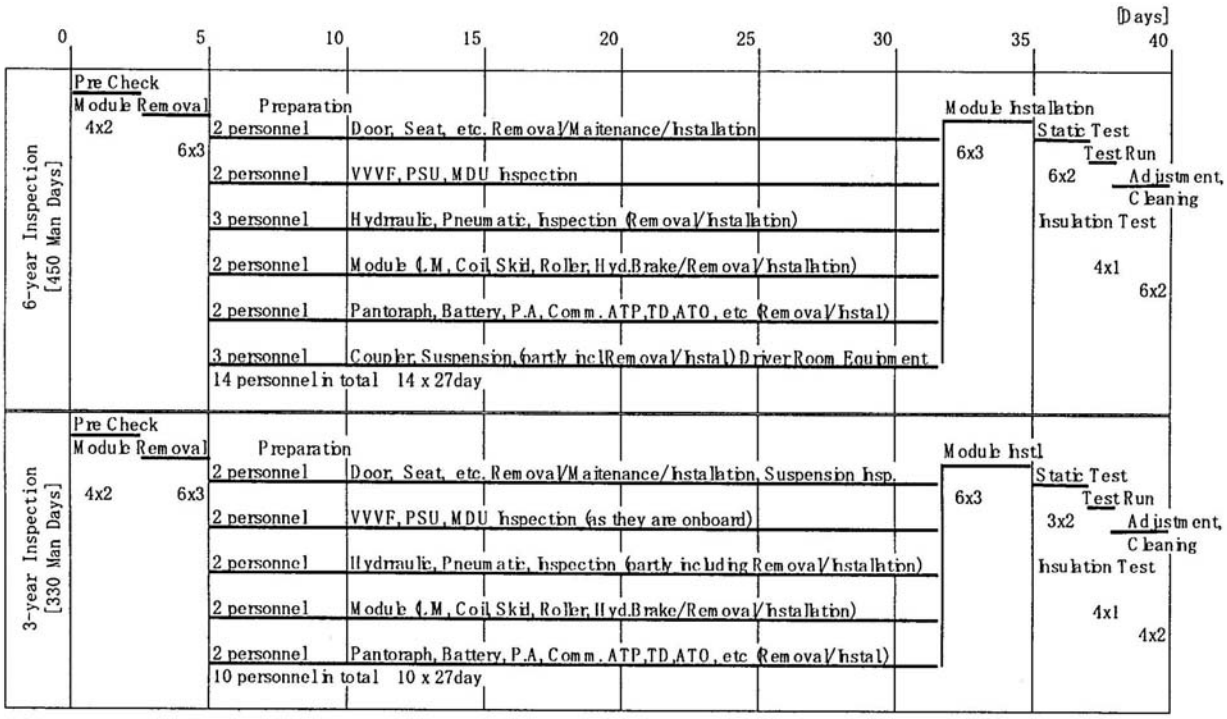

Figure 5-16 3-Year & 6-Year Inspection Schedule (Duration: 2 months plan, Typical)

B - Corrective Maintenance

MTBF/MKBF analysis for the Tobu-Kyuryo Line operation is not available.
But a rough estimation about vehicle failures in their mind as the Tobu-Kyuryo operator is as follows:
Failures those induce more than 10 minutes operational disruption : Failure A,
--Ditto-- less than 10 minutes operational disruption : Failure B,
Failures those are found in inspection works without any operational disruption : Failure C
Japanese statistics of railroad operation (1997) shows,
Average rate of incidents of A+B is 0.082 per 1 million km
Average rate of incidents of A+B+C is 0.154 per 1 million km

For the Tobu-Kyuryo Line case,
Anticipated run distance at operation start is
5,663 km (car-)km per day,
2,067,000 km per year
If the average rate of above is applied to TOBU-KYURYO,
Number of incidents of A+B is 0.17 per year
Number of incidents of A+B+C is 0.32 per year

Considering that HSST is new system and is anticipated to have initial failures, even if 100 times of failures of above is assumed.

Number of incidents of A+B would be 17 times per year, this means 1 to 2 times per month. Conclusion of the Tobu-Kyuryo Line operator is that such number of failures would be coped without much difficulty based on the current depot plan.

C - Maintenance Equipment

Followings are maintenance equipment and tools specific to HSST being installed in the maintenance shed in the Tobu-Kyuryo Line depot, except general equipment and tools.

Remove/Install Lift for Underframe equipment and Module
Removable Rail
Vehicle Body Support

Battery Discharger/Charger
MDU Testing Equipment
ATO Testing Equipment
ATP/TD Testing Equipment
Transponder Testing Equipment
VEL Testing Equipment
TIMS Testing Equipment
Failure Data Reader
Data Communication Testing Equipment

Hydraulic Parts Testing Equipment
Pneumatic Equipment Testing Equipment
Brake Control Unit Testing Equipment

Levitation Gap Automatic Measurement Equipment
Brake Shoe Automatic Measurement Equipment

6 COMMERCIALIZATION PLAN: NORTH BETHESDA TRANSITWAY CORRIDOR

The Montgomery County Department of Transportation (MCDOT) has expressed interest in utilizing the low speed maglev technology. Representatives from the MUSA Team met on April 15, 2002, with MCDOT officials and made a presentation on the use of Chubu-HSST low speed magnetic levitation technology as a transit option for one of the transit corridors in Montgomery County.

The MCDOT officials were very impressed with this technology and on May 2002 the MUSA Team was notified by MCDOT of their interest in being an end-user of the Chubu HSST Urban Maglev System in their proposed North Bethesda Transitway Corridor. MCDOT furnished the team the Final North Bethesda Transit Study Chapter dated December 1992 that was prepared by Douglas & Douglas (FTA Report No. MD-03-4500). This report was a multi-modal study that examined alternative horizontal alignments, technology options, cost and patronage estimates and an environmental and financial analysis of various people mover and transit options in the North Bethesda Corridor. A preferred alternative alignment was recommended by MCDOT. As stated in the aforementioned report:

"One basic corridor emerged and was examined as a people mover alignment between Grosvenor Metrorail Station and Rock Spring Park and Montgomery Mall." In existing public rights-of-way, minimize environmental and neighborhood impacts, keep potential capital costs in check, and maximize access to potential people mover patrons."

The MUSA Team was requested to investigate the feasibility of using Chubu HSST's Urban Maglev vehicle on this alignment. The MUSA Team subsequently preferred the analysis presented herein. Maglev patrons will be drawn from three markets: (1) Employees commuting to businesses located in Rock Spring Park and Montgomery Mall. Their commuter trips will account for approximately 40 percent of the total daily ridership; (2) Employee non-work trips for shopping, eating and business purposes during the day will account for an additional 40 percent of the ridership; (3) Residents of the North Bethesda/Potomac area who would drive, use a bus or walk to Montgomery Mall to use the Maglev to reach Grosvenor Station will form the remaining 20 percent of the patrons.

6.1 LETTER OF INTEREST

The letter from Montgomery County stating their interest as a potential End-User is included as **Appendix E**.

6.2 PROJECT AREA

The North Bethesda Urban Maglev corridor is located in one of the more heavily urbanized areas of Montgomery County, Maryland. This corridor is located about three miles north of the Bethesda central business district, four miles south of the City of Rockville's central business district, and about ten miles north of the center of Washington, DC (see **Figure 6-1**). The Washington Metropolitan Area Transit Authority's (WMATA) Grosvenor Metrorail Station lies at the southern end of heavily developed Rockville Pike (MD 355), which connects Bethesda and Rockville and is lined with offices, retail plazas, apartment buildings, and a shopping mall.

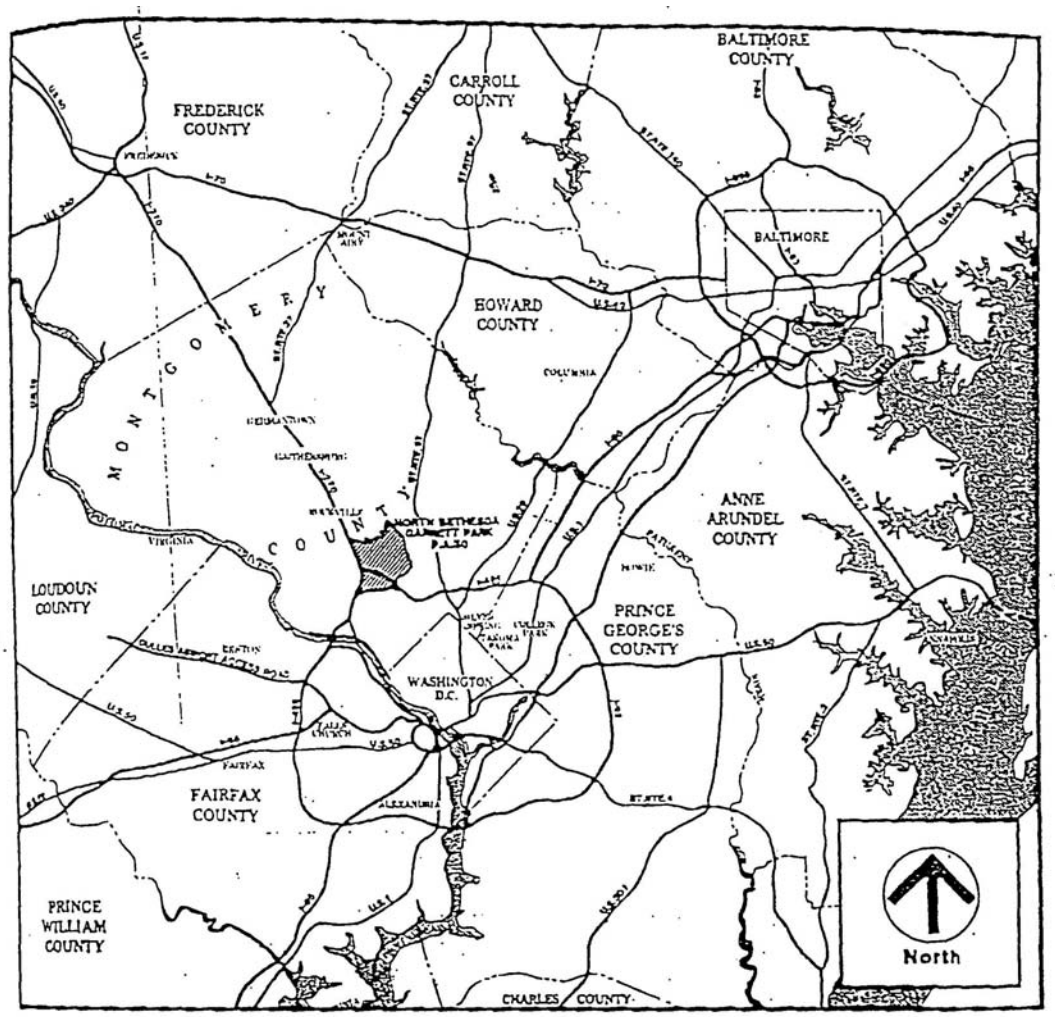

REGIONAL LOCATION MAP Figure 6-1 Regional Location Map

Figure 6-1 Regional Location Map

The North Bethesda Transitway Corridor would connect an expanding retail center at Montgomery Mall and a major employment center at Rock Spring Park with WMATA's Grosvenor Metrorail Station (see **Figure 6-2**).

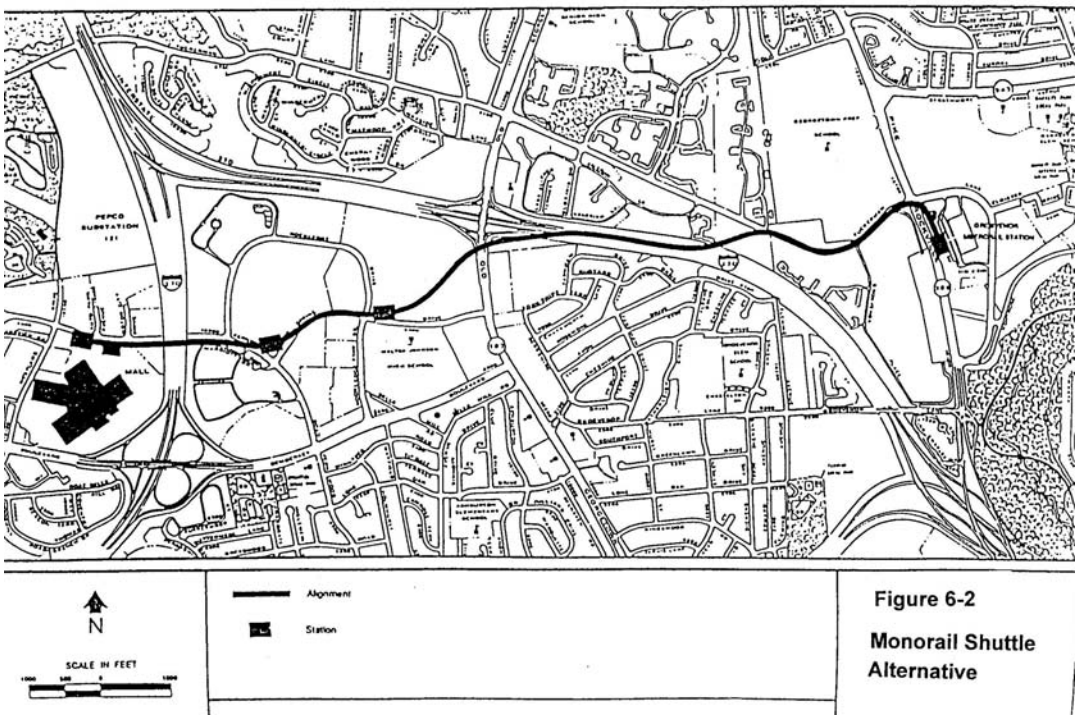

Figure 6-2 Monorail Shuttle Alternative

Rock Spring Park and Montgomery Mall are located 2 and 2.5 miles from WMATA's Grosvenor Metrorail Station. These areas are presently served by Metrobus service and Montgomery County's Ride on Bus system. Bus commuter only account for a small percentage of persons who commute daily to these areas. MCDOT's goal of building a transitway to serve those areas is to create a more cohesive transit-accessible, pedestrian-oriented suburban center, which will convert automobile users to transit riders thus lessening traffic congestion and improving air quality to the North Bethesda Community.

6.3 OVERVIEW OF THE MAGLEV CORRIDOR

A preferred alternative studied alignment is shown in **Figure 6-2**. One basic corridor emerged as we examined possible ways to place a people mover alignment between Grosvenor Memorial Station and Rock Spring Park and Montgomery Mall. In analyzing the preferred alignment we maximized use of existing public right-of-way, minimized environmental and neighborhood impacts and maximized access to potential maglev patrons.

Beginning at Montgomery Mall with a station on Westlake Terrace adjoining a commuter lot and the bus terminal, the alignment proceeds east to bridge the I-270 West Spur alongside the Fernwood Road Bridge. The alignment follows Fernwood Road to the IBM property where a station would be located. Leaving IBM property, the alignment follows Rock Spring Drive and enters the Davis property, which is proposed for development. A station would be located on this property. The alignment leaves the Davis property, crosses the Old Georgetown Road and follows the ramp down to the East Spur of I-270. It is in the median, or alternatively to the side, of the roadway. It leaves the I-270 right-of-way to cross the Tuckerman Lane following a stream valley between the Grosvenor Park Townhouses and the Timberlawn Crescent II Apartments. It proceeds east to Grosvenor Metrorail Station in the right-of-way of Tuckerman Lane turning south after crossing Rockville Pike to a station parallel with the existing WMATA rail station.

6.4 DESCRIPTION OF THE BETHESDA TRANSITWAY MAGLEV ALIGNMENT

The alignment described and included in this chapter follows the general recommendations and study guidelines described in the Northern Bethesda Transitway Study (NBTS). The basic alignment, which is approximately 2.3 miles in length, provides connections to major activity centers including Grosvenor Metrorail Station, Rock Spring Park and Montgomery Mall. Based on the preferred options noted in the NBTS, the maglev alignment provides direct connections to major activity centers by penetrating the center of the Rock Spring Corporate Park complex and follows alongside existing public right-of-way whenever existing development poses locational constraints.

6.4.1 Maglev Alignment Guidelines

A plan and profile drawing for the maglev alignment is shown in **Figure 6-3**. The plan view drawing indicates the approximate centerline of the alignment between Montgomery Mall and Grosvenor Metrorail Station. Other proposed stations are numbered with hexagonal boxes. Horizontal curves are noted with circles that reference the curve table. Locations of the proposed stations are based on the recommendations made in NBTS and platforms are shown to be along tangent or straight track. Vertical profile indicates approximate ground level and proposed top of aerial guideway elevations. Except as noted, clearance of at least 16 feet 9 inches, ground level to bottom of aerial guideway, have been assumed in the development of aerial guideway segments. This provides adequate clearance over roadways or any other areas with potential motor vehicle traffic. Generalized vertical grades and horizontal curves are also shown for the alignment profile. Horizontal curves range for minimum 300 ft. radius to maximum 3000 ft. radius as shown on the curve table. A maximum vertical grade is limited to +/- 6.0 percent as recommended by Chubu HSST.

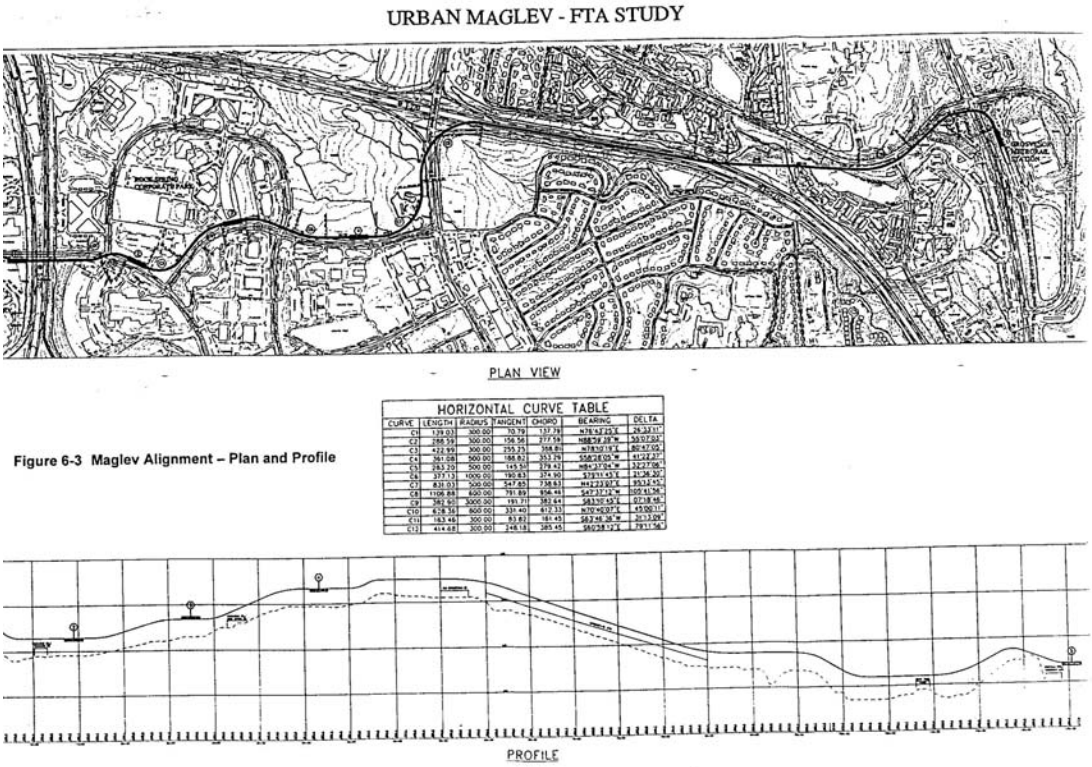

Figure 6-3 Maglev Alignment – Plan and Profile

Figure 6-3 Maglev Alignment – Plan and Profile

6.4.2 Alignment Description

Montgomery Mall to the Western Boundary of Rock Spring Corporate Park West of the I-270 West Spur (Stations 1-2)
The maglev alignment starts at a terminal station located south of Westlake Terrace, in the open Montgomery Mall parking lot. The alignment extends along the south side of Westlake Terrace and crosses I-270 spur on an independent structure, just south of the proposed Fernwood/Westlake Road Bridge.

Rock Spring Park, I-270 West Spur to Old Georgetown Road (Stations 2-4)
The alignment crosses diagonally through Rock Spring Corporate Park. Proceeding east to west, it follows alongside the major internal roadways of Fernwood Road and Rock Spring Drive, and then leaves the park just south of the Old Georgetown Road and I-270 interchange before proceeding along I-270 itself. This alignment proves direct routing through the park and accommodates two stations with Rock Spring Corporate Park and one additional station on Rock Spring Drive to provide service to most of the major concentration of employment.

I-270 Corridor, East Spur to Tuckerman Lane (Along I-270)
The alignment at this section runs along the median (aerial) of I-270. According to NBTS, the existing open median of the freeway will be reconstructed to provide six traffic lanes (three each direction) for I-270. However, State Highway Administration has indicated construction of guideway piers in the Jersey barrier would be feasible.

Tuckerman Lane to Grosvenor Metrorail Station (Tuckerman Lane – Station 5)
The alignment continues by extending south side of Tuckerman Lane right-of-way, after crossing the open area/stream valley between I-270 and Tuckerman Lane. An aerial crossing of MD 355 is provided for a terminal station closer to the existing Grosvenor Metrorail Station.

6.5 PRELIMINARY ENVIRONMENTAL ANALYSIS

A preliminary environmental analysis performed for this study focused on identifying "red flag impacts," that is impacts of such potential severity that they would limit where we placed a people mover alternative. MUSA did not measure the severity of impacts through detailed studies, as this was beyond the scope of this study. If further planning studies were undertaken for the North Bethesda Maglev System, then a more detailed environmental impact assessment would be made during preparation of the Alternatives Analysis/Draft Environmental Impact Statement report.

In general, implementing the North Bethesda Maglev would generate few negative impacts relative to a typical new transportation corridor:

- Most of the route is in existing public transportation rights-of-way where damage to the natural environment has already been done and corridors have already been created.
- There would be no buildings removed or taken.
- Ambient noise levels are generally high along the corridor so that the small increment made by the maglev vehicles will be virtually imperceptible.
- The maglev guideway is elevated, eliminating the barrier effect created by rail systems built at grade level.
- No public parkland will be taken.

6.6 IMPACTS OF THIS MAGLEV SYSTEM

Reduction of Vehicle Miles of Travel (VMT)
Based upon MCDOT's "North Bethesda Transit Way Study", 4,600 persons a day would be diverted from automobiles to use the maglev system and Metrorail with a net reduction of 4,200 vehicles. This would remove 45,000 vehicles miles of travel from the area streets a day or 1.4 million a year. The result of taking these automobiles off the road would be better local air quality and improvement in traffic conditions, particularly for intersection and I-270 ramps in the maglev corridor.

Reduction in Parking Spaces Needed at Rock Spring Park
Approximately 2,000 fewer parking spaces would be needed at Rock Spring Park, leaving more land in open space.

Neighborhood Impacts Low
The maglev alignment mainly follows existing right-of-way, takes no buildings, and is quiet in a very noisy corridor, the maglev impact on the existing neighborhoods between the Grosvenor Metrorail Station and Rock Spring Park would be low.

Natural System Impacts Limited to Stream Valley
On elevated guideway, the maglev spans the 1000-foot area minimizing impacts on the streams and wetlands but requiring the removal of approximately a 30-foot corridor of trees. The

Placement of columns in t he valley and an unpaved access road would create minor but manageable impacts.

Enhance Employment Opportunities and Accessibility to Retail and Office Areas
Building the maglev system would enhance and expand employment opportunities at Rock Spring Park and Montgomery Mall for those not using automobiles could transfer from Metrorail or buses at WMATA Grosvenor Station. Retail activity would also increase as additional sales are captured from improved accessibility to the Montgomery Mall area businesses.

Rock Spring/Montgomery Mall Employers Receive Competitive Advantage
Employers will be more accessible, employee recruitment and retainage will increase which will give employers near the maglev stations a competitive advantage over those farther away. This, in turn, will increase the desirability of offices/stores near the maglev and their lease rates. This increased value can be tapped to help finance the maglev System.

6.7 RIDERSHIP FORECASTS

Forecasts have been developed for a maglev operation between the Grosvenor Metro Station and Montgomery Mall in Bethesda, Maryland. The basis for the forecasts is a study done for the Montgomery County Department of Transportation by Douglas and Douglas in 1992, *North Bethesda Transitway Study*, which looked at three alternative modes traversing the route now proposed for the maglev, from the Grosvenor Metro Station across Rockville Pike and I-270 to the Rock Spring Corporate Park and then to Montgomery Mall, a monorail shuttle, a monorail loop, and an Automated Light Rail Transit system like Vancouver or Docklands in London. That study applied EMME/2 travel forecasting procedures to determine what travelers would use these modes to connect to the Grosvenor Station or for trips within the region and forecast 2020 daily travel.

A Chubu HSST maglev system can be proposed for this route, but no operating plans have been developed for it. Travel times have been estimated, headways determined and fleet requirements calculated. As they would be necessary to develop detailed forecasts, and forecasts were required at this time, the base case of the previous study was used to estimate how much the patronage would change if the operating characteristics were improved, in a pivot point analysis. Two scenarios were hypothesized, one in which the travel times would be 10% faster than the Monorail shuttle – the fastest travel time in the prior study, and one in which the travel times would be 20% faster. Headway was assumed to be as good as the best mode tested previously. The result was a saving of only 3.3 minutes in the best case. Were the connection between Grosvenor and Montgomery Mall the only leg of the trip, that would be a significant percentage, but nearly all these trips include a connection to Metro, so the savings is more like 10% of the travel time, not enough to cause a significant shift. The travel times are shown on **Table 6-1** below.

Table 6-1 assumes a connection to Metro and a 26.5-minute Metro trip – the average Metro trip. The weighted travel time is for the people mover only, and is weighted with wait time at twice travel time. The first three columns are taken directly from the *North Bethesda Transitway Study*. The other two have been derived from the operating assumptions.

Table 6 - 1 Travel Times Along North Bethesda Transitway

Travel Times Along North Bethesda Transitway					
	Monorail Shuttle	Monorail Loop	ALRT	Maglev @ 10% faster	Maglev @ 20% faster
Travel	4.68	8.02	6.43	4.21	3.74
Wait	3.55	1.10	2.40	1.10	1.10
People Mover	8.23	9.12	8.83	5.31	4.84
Metrorail	26.50	26.50	26.50	26.50	26.50
Total Travel Time	34.73	35.62	35.33	31.81	31.34
% of Monorail Shuttle	100	103	102	92	90
Weighted Travel time	11.78	10.22	11.23	6.41	5.94

Based on those differences in travel time, it is assumed that the maglev vehicle will attract a larger share of the market. The size of that share is a function of the operating characteristics of the maglev and the relative costs. It is assumed that there are no differences in cost to the passenger. The assumption regarding travel characteristics was a 1.1-minute headway and vehicle travel time of 4.21 minutes at 10% faster and 3.74 minutes at 20% faster. The elasticity applied was 0.7 times the ratio, resulting in the demand estimates shown on **Table 6-2**.

As in **Table 6-1**, the first three columns are taken directly from the *North Bethesda Transitway Study*. The two land use scenarios differ in the intensity of the development of Rock Spring Corporate Park. Only the Master Plan Scenario was considered for this analysis. The results are illustrated graphically on **Figure 6-4**. These are not refined estimates, but approximations as to the possible impact of improved performance vehicles on the ridership estimate calculated in 1992. Further refinement would require an operating plan and updated land use forecasts, and would benefit from the application of urban travel forecasting models.

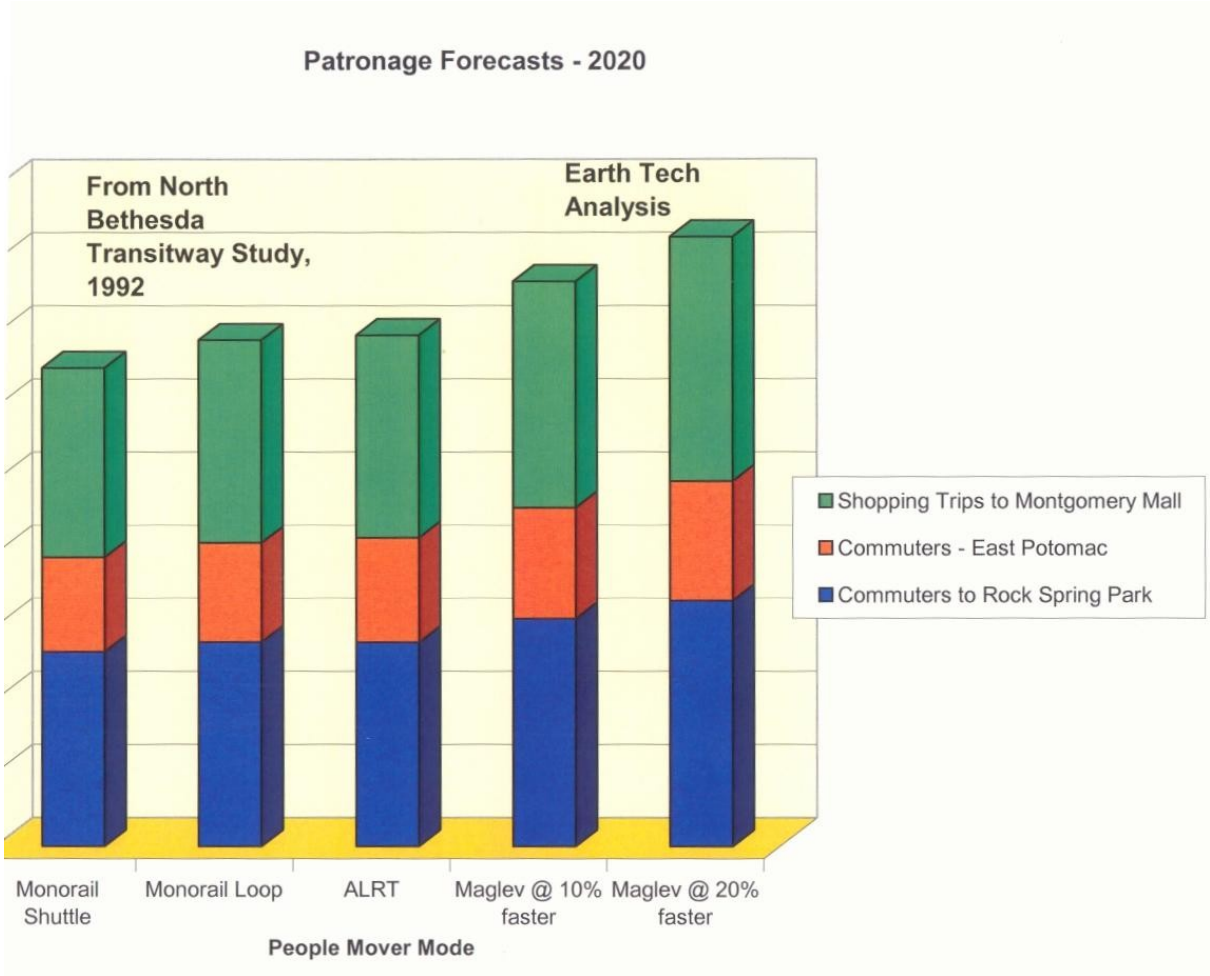

Figure 6-4 Patronage Estimates 2020

Table 6 - 2 2020 Patronage

Origin/Destination Area	Trips to Metrorail Station Area	Total Trips to/from Region	Monorail Shuttle	Monorail Loop	ALRT	Maglev @ 10% faster	Maglev @ 20% faster
Master Plan Scenario							
Commuters to Rock Spring Park	17,577	48,725	5,313	5,579	5,572	6,225	6,715
Rock Spring Park Non-Work Trips	46,477	96,828					
Commuters - East Potomac	18,123	34,119	2,590	2,720	2,868	3,035	3,274
Shopping Trips to Montgomery Mall	4,712	32,439	5,183	5,546	5,542	6,188	6,675
Total	86,889	212,111	13,086	13,845	13,982	15,447	16,663
Nodal A Scenario							
Commuters to Rock Spring Park	22,983	63,711	3,004	3,134	3,171		
Rock Spring Park Non-Work Trips	51,764	107,842					
Commuters - East Potomac	18,123	34,119	2,590	2,720	2,868		
Shopping Trips to Montgomery Mall	4,712	32,439	5,183	5,546	5,542		
Total	97,582	238,111	10,777	11,400	11,581		

6.8 CAPACITY

From the 1992 ridership forecasts reported in the North Bethesda Transitway text, the estimated daily patronage is 15,447 passengers per day. We estimated that 70% of this daily patronage will be concentrated in the morning and afternoon peak periods that equates to a demand of 10,819 passengers peak total or 5,406 passengers per peak period. We estimate that the peak period will last 2 hours in the morning and 2 hours in the afternoon. The capacity per hour then is 5,406 over 2 hours on 2,703pphpd. From the fleet estimate above, a service level of 4 2-car vehicles will provide a capacity of 2,900 pphpd at 3.3 minutes headway. A fleet of 5 2-car vehicles (one spare) is recommended. (See **Table 6-3a and 6-3b**).

6.8.1 Train Operation Estimate

Table 6-3a Train Operation Estimates

Station	Length	(Link Speed) Avg. Speed	Link Time) Total Time
1-2	1,310 ft.	18.2 mph	49 sec.
2-5	1,300 ft	18.3 mph	48 sec.
3-4	1,430 ft	21.7 mph	45 sec.
4-5	8,370 ft	34.8 mph	164 sec.
1-5	**12,540 ft**	**17.5 mph**	**351 sec. + dwell 6.61 min.**
			Total Round Trip 13.23 Min.

Note: ***Average Dwell Time at Stations 2 & 4 => 20 seconds***
Average Dwell Time at Stations 1 & 5 => 30 seconds

Table 6-3b Headway Estimates

# of 2-Car Sets	Headway	pphpd
1	13.23 min.	726
2	6.61 min.	1,453
3	4.40 min.	2,179
4	3.30 min.	2,906
5	2.6 min.	3,632
6	2.2 min.	4,358
7	1.89 min.	5,085

6.9 COST ESTIMATE

The purpose of this estimate is to establish and/or confirm a budget for a Low-speed Maglev Urban Transportation system built along the 2.3 mile North Bethesda Transitway alignment. Our approach was to develop a Conceptual Cost Estimate, **(Table 6-4)** with emphasis on quantity and unit price development. It also made sure that a comprehensive scope review was done for the estimate to capture all possible costs to be incurred for the project. This estimate will also be used to define a baseline, against which funding may be provided, and to be used to track project cost as detailed design progresses. This allows the design team to verify key design assumptions.

Table 6-4 Maglev Conceptual Estimate

Item		Description	Unit	Quantity	Unit Cost	Total
1	Site Work					
2		Site Clearance	RF	12,612	100	1,261,168
3		Misc Demolition	RF	12,612	50	630,584
4		Utility Relocation	RF	12,612	75	945,876
5		Misc Road/Hwy Construction at Crossing	EA	5	200,000	1,000,000
6						
7	Right-of-Way					
8		ROW Acquisition	RF	12,612	100	1,261,168
9						
10	Guideway					
11		Guideway	RF	11,612	3,557	41,303,176
12		Station Guideway	RF	1,000	3,557	3,557,037
13		Crossover	EA	2	400,000	800,000
14						
15	Guideway Girders					
16		Girders & Contact Plates	TF	25,223	203	5,125,387
17						
18	Stations					-
19		Station #1	EA	1	2,177,069	2,177,069
20		Station #2	EA	1	2,177,069	2,177,069
21		Station #3	EA	1	2,177,069	2,177,069
22		Station #4	EA	1	2,177,069	2,177,069
23		Station #5	EA	1	3,000,000	3,000,000
24						
25	Maintenance Shop					
26		Maintenance Shop Construction	SF	10,000	100	1,000,000
27		Maintenance Equipment	LS	1	500,000	500,000
28						
29	Lighting					
30		Guideway	RF	12,612	50	630,584
31						
32	Traction Power					
33		Traction Power Distribution on Guideway	RF	12,612	30	378,350
34		Substation for Power Conversion	Ea	6	250,000	1,500,000
35						
36	Train Control					
37		Train Control	RF	12,612	80	1,008,934
38						
39	Communication					
40		Communication	RF	12,612	25	315,292
41						
42	Fare Collection					
43		Fare Collection Per Station	Ea	5	250,000	1,250,000
44						
45	Signaling					
46		Signaling	RF	12,612	50	630,584
47						
48	Signage					
49		Signage	RF	12,612	40	504,467
50						
51	Security					
52		Electronic Security	RF	12,612	120	1,513,402
53		Passive Barrier Security	RF	12,612	50	630,584
54						
55	Vehicle Procurement					
56		2 Car Set	EA	5	4,400,000	22,000,000
57			EA	-		-
58						
59	**Total Direct Cost**					**99,454,870**

60						
61						
62	Design Cost - A/E			7%		6,961,841
63	Subtotal					106,416,711
64						
65	Program Management & Administration			2%		2,128,334
66	Subtotal					108,545,045
67						
68	Construction Management			6%		6,512,703
69	Subtotal					115,057,748
70						
71	Private Utility Agencies			2%		2,301,155
72	Subtotal					117,358,903
73						
74	ROW Attorney Fees & Other Legal Fee			0%		-
75	Subtotal					117,358,903
76						
77	Public Information			0.0%		-
78	Subtotal					117,358,903
79						
80	Pre-Revenue Operation & Startup			3%		3,520,767
81	Subtotal					120,879,670
82						
83	Insurances			2%		2,417,593
84	Subtotal					123,297,263
85						
86	Construction Contingency			10%		12,329,726
87	Subtotal					135,626,990
88						
89	Project Reserve			5%		6,781,349
90						
91	**Total Project Cost**					**$ 142,408,339**
	Construction Cost Per Mile					**51,550,411**
		Construction Cost+Contingency+Reserve/2.3 mi.				

The estimate covers the alignment in Montgomery County Maryland from the Montgomery Mall station to the Grosvenor Washington Metro Area Transit Authority (WMATA) station on the Red Line. The alignment is 2.3 miles dual aerial guideway with aerial stations. The design includes a covered tail section guideway, at the Montgomery Mall end, which would be used to park and maintain the vehicles.

The alignment would utilize the Japanese Low-Speed Maglev Urban Transportation System, as adapted to meet US criteria in the following areas: power requirements, guideway flexibility, ADA Compliance, safety, and security. Also taken into consideration are system performance, routing limitations, station design parameters, vehicle types, levitation and propulsion system.

Guideway: The alignment is designed with two guideways made up of precast boxed girders running on a series of concrete piers at 66 linear feet on-center.

Stations: The alignment comprises of five aerial stations, approximately 200 linear feet long with a raised center platform. It is roofed, but open on all sides. The platform is accessed by three different modes: escalator, elevator and a set of stairs. The ground level of the station is secured with security fencing. The platform has a double crossover to allow for changing guideway.

Tail Track Section: This is an aerial guideway of approximately 200 linear feet beyond the Montgomery Mall Station. It has a center platform to accommodate maintenance operations and it is covered on all sides. MUSA has included cost for maintenance equipment procurement.

6.9.1 Estimate Exclusions and Assumptions:

1. Have included 7% of the Design Fees
2. Have included 2% for Program Management & Administration
3. Have included 6% for Construction Management
4. Have included 2% for Private Utility Agency work relating to the project
5. Have not included any legal fees
6. Have not included any Public Information fees
7. Have included 3% for pre-revenue operation and startup
8. Have included 2% for Insurances
9. Have included 10% Design Contingency
10. Have included 5% for Project Reserve
11. No provisions have been made for the future development of other properties in the general vicinity for parking or other transit access.

12. Have excluded work by WMATA to accommodate the new station at Grosvenor Station.

13. Utility relocation has been included as part of the guideway costs.

14. No unforeseen underground conditions have been considered in the preparation of this estimate. Also, no extra costs have been included in the estimate for removal of any chemical contamination during excavation.

15. We have assumed minimal additional cost for treatment of dewatered ground water into the sewer system. No cost for treatment of chemically contaminated water has been included in this estimate.

16. Cost for incoming power has been excluded in this estimate. However, we have included cost for power distribution along the guideway.

17. No additional cost for overtime and shift work has been included in this estimate. We have assumed straight-time work only.

19. Train Control work has been included.

20. Communication work has been included.

21. The cost for a comprehensive Security system has been included in the estimate.

22. Central Supervisory & control system work has been included.

23. Fare Collection system work has been included as a station cost.

24. We have assumed 1500 Volt DC Feeder from auxiliary substations that does not comply with the US typical service of 750 volts.

25. Quantities have been developed from the Montgomery County Alignment drawings submitted to the MUSA team on August 24, 2002. Other quantities are based on the estimator's experience and knowledge of the system.

26. Costs used in this estimate are in 2002 US Dollars. The unit costs reflect total installed prices including all subcontractor and General Contractor overhead and profit and other taxes. Information from other Transit systems was used to generate some unit costs.

6.10 FINANCING THE BETHESDA TRANSITWAY MAGLEV

Various financing options were analyzed for building and operating a people mover system and concluded that a public/private partnership with costs borne by both the public and private sectors was a good solution for this application. Non-federal funding strategies were initially investigated. This investigation concluded that 70-80 percent of the funding may be derived from private sector, the Montgomery County Government, and State of Maryland sources. The balance would be in the form of federal funds derived from either the transfer of highway funds to transit as permitted und TEA-21 or use of FTA Section 9 Formula Fundings. If federal funding is pursued, federal project

development requirements, including preparation of an environmental impact statement, must be met. Potential private sector funding could come from: (1) payments in lieu of parking for the 2000+ parking spaces at Rock Spring which would not be needed because of the people mover, and (2) benefit assessments from businesses near the maglev which would benefit from its presence through increased sales and rents. These two sources could supply the funds needed to operate and maintain the system annually (the amount revenues won't cover) as well as about 35 to 40 percent of the funds needed to build the system. It is suggested that a workable funding scheme for the public sector to build the system could be a potential 20 to 30 percent share of the costs from the Federal Transportation Administration, a potential 20 to 30 percent share from the State of Maryland, and a potential 10 to 20 percent share from Montgomery County.

6.11 RECOMMENDATIONS

The MUSA Team concluded that implementing a maglev system in the North Bethesda Corridor is feasible. A maglev system would be an attractive transportation facility for reducing traffic congestion and lessening reliance on the automobile. MUSA recommends that:

- Montgomery County proceeds with the project by requesting federal funds to carry the project forward to the Alternatives Analysis/Draft Environmental Impact Statement planning stage.

- Further planning should concentrate on an elevated fixed-guideway maglev transit system, generally following the alignment identified in this study.

- Exact station locations need to be examined in more detail. In particular, the stations on Tuckerman Lane and midway through Rock Spring Park (the "Rock Spring" station) should be analyzed to weigh the costs to build them and their impact on system travel times versus the potential increase in riders. The connection at Grosvenor Metrorail Station should receive more detailed study. The Earth Tech Team looked at one feasible connection, but more detailed engineering may suggest other desirable ways to link the maglev system and Metrorail stations.

- The relative cost of the maglev system should be more definite with further studies. Further study of manual versus automatic operation is also desirable. This study identified a manually operated high-speed monorail as more efficient than currently available mid-speed monorails and automated light rail transit systems. However, this decision can be modified as people mover technology and comparative costs continue to evolve.

7 CHSST SYSTEM COSTS

7.1 INTRODUCTION

Cost information for the CHSST system has been assembled from several sources. The primary sources were the local and central Japanese government bureaus responsible for managing the financing, construction and operation of the Tobu-Kyuryo line. Construction of this system will start in 2003, with completion in 2005. This is the first and only revenue application of CHSST to date, so the extensive planning and study efforts conducted in Japan starting over ten years ago provided this cost data.

The Japanese projected cost information for this line in turn originated from both the 1993 comprehensive planning document used for approval of the system, and information provided by the Aichi Prefecture officials to the FTA/MUSA visit to Japan in March 2002. Both the national Ministry of Land, Infrastructure and Transportation (MLIT) and Aichi Prefecture provided planning and financing services. Program and operations management was provided by the Prefecture supported by a network of contractors and subcontractors.

The cost breakdowns for both the initial construction and for operating costs were detailed only down to the general category level: i.e., capital costs for track components, support structures (infrastructure), substations, signal communication system, passenger stations, etc. and operating costs for cost of electrical power for vehicles, station upkeep, guideway maintenance, etc.

The actual costs assembled in 1993 were for a "baseline" system that was not exactly the same as the Kyuryo Line, which had not been laid out at that time. This 1993 baseline system was a 10 km, 11 station layout while the Tobu- Tobu-Kyuryo Line is a 9.2 km, 9 station layout with some infrastructure features tailored for the 2005 Aichi Expo. The '93 study was aimed at comparing the relative economic and social merit of the CHSST system vs. a typical Japanese monorail system and a "new" medium capacity rail-like system. However the proportioning for the various capital and operating cost categories was valuable and is used in this discussion.

These cost proportions as given in the 1993 analysis vs. the later 2002 visit were then compared. Breakdowns given in 1993 were adjusted based on the later information. Also, the industrial inflation from 1993-2002 was looked at for both the U.S. and Japan, including the differing dollar-yen exchange rate. While a detailed economic analysis for a U.S. application is beyond the scope of this report, an attempt was made to identify any likely and obvious U.S.-to-Japan differences and then project a range of costs for a U.S. application.

7.2 SYSTEM LEVEL CONSTRUCTION COST BREAKDOWN

Presently, construction costs for the new Tobu- Kyuryo Line are estimated at about 900M (105billion ¥) for guideway, stations, power facilities, etc. The tunnel section at 2.2 M/km will be 3x the unit cost of the elevated section at 9.1 B¥/km. 40% of the cost will be borne by a combination of private and public companies, and will be recouped in

about 20 years. The local, prefecture and national government will provide Sixty (60) percent of the cost. The 40 percent portion represents the "Maglev" part (active guideway portion, cars, signals, etc.), and the 60 percent represents the infrastructure (guideway supporting structures, site work, tunnels, etc.).

Using the elevated configuration as a common reference, the total cost of the CHSST Tobu- Tobu-Kyuryo Line is approximately $110 M/mile based on a straight translation of the current estimate of 8.5 B¥/km to U.S.$ at a 2003 exchange rate of 120 ¥ /$. There are several factors that should be considered in understanding this cost.

A percentage cost breakdown of the CHSST system costs was computed from past Japanese data used for study and approval of the Aichi Expo line. This study estimated the costs/km for the "baseline system" to be 5.83 B¥/km in the 1992 time frame.

Table 7-1 Percentage of CHSST Construction and Deployment Costs*

Guideway Structures & Track	37%
Power Substations & Distribution	12%
Signal & Communications	9%
Stations & Buildings	19%
Infrastructure	12%
Fitout & Equipment	5%
Other Buildings	2%
Vehicles	14%
Yards	4%
Land (Substations/Yards)	5%

* Based on 1993 Economic Analysis of "Baseline" System (10 km, 11 stations, not "Expo" System)

Table 7-1 can be used as a general guideline, or starting point for proportional costs of a CHSST two-way urban-suburban system, in a Japanese environment

There has been more than a 45 percent increase in the overall estimated cost/km of the CHSST elevated configuration from 1992 to 2003: from 5.83 to 8.5 Billion ¥/km. To understand this, we considered several possible factors.

The relative inflation rate in Japan was very low (under 2 percent) over that time. Therefore other factors should account for the increase of the costs in Japan. These could include:

- Current costs are based on actual "hard" quotes with specific bids based on detailed designs, as opposed to preliminary estimates;
- The Tobu- Tobu-Kyuryo Line may include "Expo" features not directly related to the Maglev system, such as more elaborate or larger stations, parking and roads;

- Negotiation of urban areas such as curves requiring building removal or eminent domain proceedings;
- Additional design changes made based on technical needs, more stringent government regulation, safety-related or reliability-related redundancy, etc.

The following subsections provide additional breakdowns of the major cost areas, where available from CHSST.

Cost breakdowns for other elements such as the vehicles, power system and train control/protection systems however, were not provided, and so these subsections reflect only their percentages of overall system costs as shown in Table 7-1 above. For this purpose, an estimated cost for an "all-elevated" version of the Tobu-Kyuryo Line was prepared, based on reducing the cost of the 1.8 km tunnel portion by a factor of 3 (the tunnel section was 20 percent of the total 9.2 km length). Using current exchange rates, this "all-elevated" total cost was approximately 760 M$ (vs. the original 880 M$ cost with the tunnel section included at its full cost). These were based on costs cited earlier in this subsection.

7.3 GUIDEWAY COST BREAKDOWN

A cost estimate prepared by the MUSA Team for the North Bethesda Transitway showed a basic cost of approximately 51M$/mile for a two-way CHSST "basic" elevated guideway, including vehicles, stations, substations, support facilities, signal/communication systems, yards, land, etc.

The basic elevated CHSST guideway can be proportioned as shown in Table 7-2 (including manufacturing, transport, and complete installation). This uses CHSST data for proportioning the guideway structure vs. the rails, sleepers and reaction rail that comprise the "Maglev" components.

Table 7-2 Possible Breakdown of "Basic" Guideway Costs

Pre-stressed Concrete Beams & Attachments	62% of total basic guideway
Concrete Pylons, Footings	19%
Other (walkways, ladders, etc.)	5%
Track Rails, Sleepers & Attachments	13%
Reaction Plates (for LIM)	1%

The information above can therefore serve as an initial guide for cost breakdown of the HSST guideway system. If new U.S. applications require more or less expenditure in a particular category to suit specific conditions, the proportional effects on overall costs can be estimated. This, for example, could include local foundation subsurface conditions, special station requirements or unusual crossing spans.

7.4 VEHICLE COST BREAKDOWN

For confidentiality reasons, a breakdown of the vehicle costs has not been provided by Chubu-HSST or the contractors for the Tobu-Kyuryo (Nippon Sharyo). From the overall

system breakdown based on Table 11-1 above, about 14 percent of the system cost represented vehicles. This would amount to about 105-110 M$ for vehicles based on the estimated "all-elevated" Tobu-Kyuryo Line cost of 760 M$. If ten 3-car consists (including spares) are to be purchased, this would result in a unit cost of 3-4 M$/vehicle; also these are the "long" 90-95 passenger vehicles similar to the 100-L. (Again, the capacity is based on the 3.3 sq ft/standee appropriate for the US.) Both the number of vehicles and their actual cost would need to be provided by MUSA for a proper comparison to FTA requirements. However, that target of 1.SM$/vehicle could be exceeded based on the assumption of 30 vehicles included in that system.

7.5 POWER SUPPLY COST BREAKDOWN

A detailed breakdown of the power system costs was also not provided by CHSST. From the overall system breakdown based on (**Table 7-1** above), about 12 percent of the system cost represented power supply and distribution. (Note that Ref. 1 was for a "baseline" system, not the Tobu-Kyuryo Line.) This would amount to 90-95 M$ for the power/distribution system based on the estimated "all-elevated" Tobu-Kyuryo Line cost. This category would include the utility tie-ins, power conversion (1500 VDC in this case), regulation, substations, distribution, etc. It is assumed that line sections would be fed in such a way that a single line break would not stop the system, but that alternative feed routes would be available, similar to conventional electric rail systems.

7.6 AUTOMATIC TRAIN OPERATION/PROTECTION, SIGNAL AND COMMUNICATION COST BREAKDOWN

A detailed breakdown of the ATO, Train Protection, Signal and Communication system costs was not provided by CHSST. From the overall system breakdown based on (Table 7-1), about 9 percent of the system cost represented the train control/protection, signal and communication systems. This would amount to 65-70 M$ for those systems, based on the estimated "all-elevated" Tobu-Kyuryo Line cost.

7.7 STATION COSTS

From the overall system breakdown based on (Table 7-1), about 17 percent of the system cost represented stations (with fitout). This was for a "baseline" system with 11 stations, but using the estimated "all-elevated" Tobu-Kyuryo Line cost, this would work out to about 130M$ for stations, or 10-12 M$ each. Current costs would need to be provided for a proper understanding of their contribution to the system, but it appears station costs could well exceed the FTA requirement of 2 M$/station. However, expected high property acquisition costs have not been accounted for.

7.8 COST COMPARISON WITH LIGHT RAIL

The construction cost of the CHSST maglev, in its proposed revenue form, can be compared with other urban-suburban transportation systems such as a light rail line. Such a comparison must be obtained by comparing the capital costs of systems that provide the same level of ultimate service; i.e. the performance and physical differences should be accounted for in arriving at what are the truly "comparable" systems to service a given area. Such aspects would include differences in acceleration/braking, maximum speed,

grade-climbing ability and curving limitations. Also, market demand differences should be accounted for in load factors, daily schedules of operation, train capacities, etc.

7.9 SYSTEM LEVEL OPERATING COST BREAKDOWN

7.9.1 Revenue and Operating Costs

Using the Tobu-Kyuryo Line data provided by Aichi officials, revenue is projected to be about 2.8 B¥/yr-90 percent of which is operating cost and 10 percent used to meet the investment portion above. The 2.5. B¥/yr (19.5 M$/yr) operating cost is divided as shown in **Table 7-3**.

Table 7-3 Projected Tobu-Kyuryo Line Revenue Breakdown

Personnel	0.6 B¥/yr	($4.6M)	24% of total
Running, including power	0.7 B¥/yr	($5.4M)	28%
Taxes	0.3 B¥/yr	($2.5M)	12%
Debt Service	0.9 B¥/yr	($6.9M)	36%
Total	**2.5 B¥/yr**		

If revenue is 2.8 B¥/yr for 31,000 passengers/day averaged year-round, and the breakeven point is 26,000 passengers/day, then the 0.3 B¥/yr can be used to retire the 40 percent "Maglev Portion" cost.

A further breakdown of the "running" costs of 0.7 B¥/yr is shown in **Table 7-4.**

Table 7- 4 Running Cost Breakdown for Tobu-Kyuryo Line

Guideway maintenance	40 M¥/yr	($.31M)	6% of total
Electrical	130 M¥/yr	($1.0M)	19.5%
Vehicles	110 M¥/yr	($.8M)	16.5%
Traffic/Stations	110 M¥/yr	($.8M)	16.5%
Power Costs	150 M¥/yr	($1.2M)	22%
Miscellaneous	130 M¥/yr	($1.0M)	19.5%
Total	**670 M¥/yr**		

These all can be useful benchmarks for proportioning costs in similar systems, allowing for the differences in the specific layout, U.S. regulations and design features, operating structure, etc.

Labor costs for operations in the U.S. may be an issue when using these costs based on Japanese operating practices. For example, the projected Tobu-Kyuryo labor costs are a quarter of the total operating costs, which could be a low proportion for a U.S. system. Also, the Japanese environment may tolerate relatively higher fares than the U.S., in which substantial subsidies are demanded for regional and urban systems. The projected regional Tobu-Kyuryo Line revenue of 22 M¥/yr carrying 11.2 M passengers means an

average fare of $2 for a mix of trips on a 9-station 5.7 mile system, which is short by U.S. standards.

7.10 FINANCING OF THE TOBU-KYURYO LINE

The Tobu-Kyuryo Line is a 5.6-mile double track (includes 1-mile tunnel section). The line will have 9 stations, headway of 6-10 minutes and a ridership of 31,000 trips per day. There will be 8 trains in service, 3-car each for a total Japanese train capacity of 400 persons (104 seated and 296 standee). Similar train in the US would have a capacity of 242 persons (106 seated and 138 standee). The project is expected to open in April 2005. The total project budget is $900 million divided into $560 million for civil work and $340 million for systems work. The project plan of finance is as follows:

- Civil work - $560 million of public grants (62%) divided into the followings:
    - Aichi Prefecture Government (local government) - $ 360 million
    - City of Nagoya - $110 million
    - Japanese Government – $ 90 million

- Systems work - $340 million of public and private grants and loans (38%) divided into the followings:
    - Private Sector grant - $34 million
    - Aichi Prefecture Government grant - $ 21 million
    - Aichi Prefecture Government Interest free loan - $54 million
    - Aichi Prefecture Government Interest bearing loan - $ 27 million
    - Municipalities grant - $14 million
    - Municipalities interest free loan - $36 million
    - Municipalities interest bearing loan - $ 18 million
    - Development Bank of Japan interest bearing loan - $ 136 million

7.11 EVALUATION AND COMPARISON OF COSTS

7.11.1 Capital and Construction Costs

The projected capital costs for the elevated portion of the CHSST Tobu-Kyuryo Line including stations is 110 M$/mile for the complete two-way system. Higher specific costs in Japan could account for a high overall amount relative to a U.S. deployment, including:

- Use of actual "hard" quotes as opposed to preliminary estimates
- Inclusion of "Expo" features not directly related to the Maglev system
- Negotiation of specific urban areas, and
- Design changes made during the interim

The overall observation is that this is not an inexpensive system even by Maglev standards, as shown by comparison to the current Transrapid deployment in China. Note that the in-tunnel portion of the Tobu-Kyuryo Line (at 3x the unit cost) was not included in this comparison.

The system breakdown analysis by FMI (Table 7-1) showed that proportioning of the major cost elements based on the CHSST 1993 baseline system, was reasonable based on other Maglev system studies. CHSST should consider addressing any special costs in the Tobu-Kyuryo Line information above. The "basic" two-way elevated guideway, one of the most important system elements, came to a cost of approximately $37-42 M/mile. Again, this is higher than anticipated for a simple guideway with no active electrical elements in the guideway.

The further cost breakdown of the "basic" guideway (the structure and rail system, excluding the signal system, power distribution, associated infrastructure costs, etc.) was shown in Section 7.3. 60-65% of this comprised the beams, and about 20% more comprised the pylons/footings, based on earlier studies of Maglev costs for the U.S. program. This would suggest that efforts to highly engineer the design and manufacture of the basic beam, by optimizing the reinforcement, material properties and manufacturing plant, could reduce costs. However, the cost of the pylons/footings did not consider the more expensive "all-piles" approach taken in Japan for conservatism in their design and implementation for the Oe test track, nor for any (unidentified) areas of the Tobu-Kyuryo Line.

Due to confidentiality reasons of the profits involved, the basic costs for the other system elements: vehicles, power supply/distribution and the train control/protection, signal and communication, and stations, were not published by CHSST. Only a rough estimate on their total cost was published, based on the proportional costs used in the 1993 study by the Aichi Prefecture and an adjusted total cost for a Tobu-Kyuryo Line assuming “all elevated construction”.

As discussed in Chapter 6.9 Cost Estimate – North Bethesda Transitway, a conceptual estimate was prepared for a proposed 2.3-mile long alignment in North Bethesda, Maryland (a suburb of Washington, D.C.) The estimate covers an alignment comprised of a dual guideway with five (5) aerial stations. This estimate also includes a covered tail section guideway at the Montgomery Mall Station, which would be used to park and maintain the vehicles.

The alignment would utilize the Japanese Low-Speed Maglev Urban Transportation System, as adapted to meet US criteria in the following areas: power requirements, guideway flexibility, ADA Compliance, safety and security. The guideway is designed with twin precast boxed girders running on a series of concrete piers at 66 foot spacings. The five aerial stations are approximately 200 linear feet long with raised center platforms. They are roofed, but open on all sides. The platform is accessed by three different modes: escalator, elevator and a set of stairs. The ground level of the station is secured with security fencing. The platform has a double crossover to allow for changing guideways. There is an extension of the guideway of approximately 200 linear feet beyond the Montgomery Mall Station to accommodate maintenance operations.

Based on this alignment and configurations, the total cost was estimated at $142.4 Million or $51.55 Million per mile (2002 dollars).

The breakdown of the costs, as a percentage, are as follows:

Guideway Structure & Track	51%
Power Substations & Distribution	6%
Signal & Communications	3%
Stations & Buildings	16%
Vehicles	22%
Other (ROW, etc.)	2%

Comparing these percentages with those shown in Table 7-1, which, are based on 1993 cost estimates by the Aichi Prefecture, the percentage costs for the guideway and vehicles are substantially higher. The 51% for guideway and track is close to the range of 55%-60% of the total cost which is typical for building of guideways in the US. The higher 22% for the vehicle procurement may be accounted for in the additional shipping from Japan and assembly costs in the US. However, this 22% of cost may be reduced if several vehicles are ordered concurrently, thus warranting a discount in the purchase price. Also, as previously mentioned, there could be a degree of uncertainty in this cost.

The other percentages for signals, power and stations will vary based on the specific site and alignment.

7.11.2 Operating Costs

The projections for the planned Tobu-Kyuryo Line have been detailed above, showing an average fare of $2 for a mix of trips over the 9-station, 9-km system. The mix and average length of trips is not known. To compare with the FTA operating cost goal of $15/vehicle-mile ($9/vehicle-km), the average car loading (load factor) and average trip length should be provided by MUSA. Then the effect of US conditions vs. the Japanese environment must be factored in, as needed. In general, a $2 fare for predominantly short trips might be considered excessive in the US, but this would depend on the demand and any subsidy available for a specific area.

8 SUMMARY of MODIFICATIONS and IMPROVEMENTS to CHUBU HSST MAGLEV SYSTEM

This chapter summarizes potential improvements and modifications to Chubu HSST System. Each of the items is discussed in more detail in Chapter 4 for guideway improvements and Chapter 5 for vehicles and systems items.

8.1 GUIDEWAY AND VEHICLE IMPROVEMENTS AND MODIFICATIONS

8.1.1 Rail Fixation Methods

The MUSA team believes the potential exists to use a more direct fixation method. The benefits of a more direct fixation method would include:

- Reduced overall weight (dead load) by eliminating the sleepers
- Reduced overall structural depth and reduced vertical eccentricity in rail connection
- Reduced installation time (if details are carefully designed)
- Less future maintenance
- Improved aesthetics
- Ability to utilize the top surface of the girder as an emergency walkway

Key Issues: In evaluating the feasibility of using alternative rail fixation methods, a number of issues need to be addressed. They include:

- Construction Tolerances: The construction and alignment tolerances for the CHSST system are quite stringent. CHSST supports the use of the steel sleeper system since its past installation experience indicate that the tolerances can be met with this method relatively easily.

- Durability and Fatigue: With a target design life for the guideway of 75 years, any detail developed must maintain its integrity in terms of fatigue and durability. This can be achieved by intelligent detailing, and careful review of fatigue related stresses.

- Vibration: Vibration problems caused when the natural frequency of the fluctuating magnetic field matches that of a particular component of the rail support system need to be evaluated.

- Maintenance / Adjustability: Since the alignment tolerances of the rail are tight, any detail developed needs to provide a relatively easy means of adjustment as the system ages and some components shift relative to each other.

- Cost: The primary objective of any design task is to develop a safe and effective design solution at reasonable cost, not just in terms of capital cost but long-term operations and maintenance costs.

- Historical Precedence: Experimentation though innovative, does not assuage Owner concerns as to whether the rail fixation system will perform well in the long-term. Design details adopted should therefore utilize conventional methods whenever possible.

- Aesthetics: One of the stated objectives of the FTA General Requirements Document is to develop a guideway that will be aesthetically pleasing to a large majority of the public. Elimination of the sleeper / rail assembly would significantly improve the aesthetics of the guideway system and promote the sleekness and modernity of the maglev system.

- Emergency Egress: Elimination of the sleeper / rail system would remove an impediment to the direct evacuation of passengers from the front of the vehicle during an emergency. A rail attachment method that provides a smooth surface along the guideway would be very beneficial in this regard.

The search for the optimal alternative solution requires balancing the sometimes-conflicting requirements of these various issues.

The Chubu-HSST's experience indicates that the use of direct connection requires significantly more manpower to install than its standard steel sleeper system. However, it is believed that the main reason for the considerable time required to install the direct connection alternative can be attributed to the details used. The improved direct fixation detail described below should result in a more streamlined installation process. This, together with improved construction methods through the use of a jig, and tighter quality control on the anchor bolts and cross slope tolerances, should improve the detail and reduce installation time.

8.1.2 Foundation Design

In certain applications, monoshafts (a single drilled shaft that is typically larger in diameter than the pier) may be considered. With monoshafts, obstructions can be identified and sometimes more easily removed since the hole is larger. The use of monoshafts has become quite commonplace and is particularly applicable when cobbles and boulders are part of the matrix of the ground conditions. Other advantages of monoshafts are that their use can eliminate constructing pile caps, resulting in fewer conflicts with utilities, making it easier to accommodate future expansion, and making it easier to install columns in confined areas. A disadvantage of monoshafts is that their use on larger column heights (greater than 25 ft) can make the structure as a whole more flexible. This can be verified by a lateral load analysis.

8.1.3 Design and Construction Approach

The design and construction approach currently used by CHSST in Japan is a traditional one - the traditional 'design' then 'bid' then 'build' approach where the contractor has limited input into the design. In the United States the design/build approach (and variations thereof) where the contractor receives the base design criteria and then

develops the detailed designs becoming more prevalent. Giving qualified contractors (especially experienced 'design-build' contractors) the opportunity to inject their own special experience and technical innovation in a bid response may yield more cost savings than the more traditional design-bid-build approach utilized for the TOBU-KYURYO in Nagoya. While this approach should reduce construction costs, there is usually some trepidation that the level of quality of construction (tolerances, alignment, etc.) desired may not be provided. This concern can be eliminated by preparing a clear and concise set of construction documents and by exercising a high level of technical oversight and quality control during design and construction with a third party specialist engineering firm.

8.1.4 Efficiency of Construction

An alignment involving complex curves and a large number of varying span lengths not only complicates and increases the required engineering time, but also carries all the way through fabrication, transport, placement and fine tuning of the precast elements in the field. This in turn pays dividends later during the installation of the sleeper and rail assemblies (and direct fixation of the rail should that concept be adopted). Differing girder lengths also translate into differing designs for pier caps, piers and foundations. Keeping things simple applies just as much to guideway construction as it does to other endeavors.

8.1.5 Fabrication and Construction Tolerances

Tight tolerances translate to a high number of man-hours in the field to ensure that all the elements of the guideway, sleepers and rail are lined up and placed to their respective tolerances. Therefore, it is probable that the greatest savings would be realized by reducing the number of man-hours required to set out and align the sleeper / rail assembly.

Oe test track had minimal alignment adjustments and maintenance, which is encouraging from the long-term perspective of the performance of the system. It also indicates however that the fabrication and installation tolerances may be more stringent than really required for the safe and comfortable operation of the vehicle. Further study could be conducted to measure and evaluate alignment tolerances as they exist today along the Oe test track and then compare it with the required design tolerances to determine if relief is feasible. Cost benefit analyses would also need to be conducted to determine if the relief of tolerances would actually realize any significant savings in terms of overall construction cost.

8.1.6 Vehicle Structure

One of the most significant factors influencing the design of the guideway structure is the weight of the vehicle. Reduction in vehicle weight would generally be expected to result in a lighter guideway system including precast girders, sleeper/rail assembly, the pier caps, piers, pile caps and foundations. Some methods of reducing vehicle weight are use of composite materials for the vehicle bodies and use of more efficient and lighter linear

induction motors (LIM) and other major vehicle components. These would all have an advantageous effect on the design of the guideway.

The HSST vehicle operational speed is currently limited to about 100 kph. It cannot satisfy the FTA maximum speed requirement of 160 kph. The CHSST technical staff stated that the vehicle could be operated at 130 kph without major redesign. Calculations indicate that in the scenarios where the station spacing is not large, this reduced speed may not impact trip time significantly and the 130 kph vehicle may be acceptable on some routes in the United States. For long station spacing, the trip time will increase and the 160 kph speed for the vehicle will be needed. Since a major redesign will be required to upgrade the current HSST vehicle to this higher speed, the current CHSST vehicle upgraded to130 kph would appear to be more applicable for potential applications in the U.S. at locations with closer station spacing.

The 100-L vehicle cannot satisfy the FTA requirement of the 18.3 m (60 ft) radius curve negotiation. The 100-S vehicle comes close to the requirement with a minimum radius capability of 25m (83 ft). MUSA must evaluate the applicability of 100-L vehicles in the U.S. scenarios by studying potential Maglev routes in urban areas.

The HSST vehicle has a life of 20 years according to MUSA report. The FTA requirement is 30 years. The HSST vehicle life must be analyzed and some redesign may be required to increase its life to the FTA requirement.

There is a US mandatory requirement for passenger egress in the event of smoke, fire and other hazards. This must be adequately addressed, because the vehicle does not have windows or hatches for passengers to open and escape, or for rescue access.
The level of crashworthiness of the vehicle is unknown. The vehicle nose must be analyzed and redesigned where necessary to assure some level of passenger protection from impacts at reasonable speed.

The vehicle interior layout must be modified to satisfy the mandatory ADA requirement, which can impact passenger capacity and interior seat layout. Additionally, the passenger car capacity for U.S. operations needs to be based on an adequate floor area of 0.3 m' (3.3 ft'-) per standee as reflected in some MUSA data. The smaller area of 0.14 m2/standee, while acceptable in Japan, is insufficient for U.S. application.

The vehicle weight should be reduced to enable increased propulsion power and to potentially operate the vehicle at a higher levitation gap. Reduced vehicle weight can reduce trip time, increase grade climbing capability and lessen restrictions on guideway construction and maintenance tolerances.

8.1.7 Value Design

The potential for incremental savings can be investigated by evaluating several of the guideway components from a “value design” perspective. Where applicable standard shapes and sizes for items such as the sleepers and bolts could be considered. Similarly,

an increase in sleeper spacing may also be feasible as long as the issue of vibration is thoroughly researched.

8.2 SYSTEM AND SAFETY IMPROVEMENTS AND MODIFICATIONS

8.2.1 Levitation and Guidance System

Levitation: A possible enhancement to the HSST is to increase the attractive force capabilities of the levitation magnet an additional 50%. This will allow for the reduction of the weight of the total vehicle, specifically in the "modules", the sub frames, and some of the related electrical equipment such as the magnet choppers. Additionally, the under frame would be simplified, saving weight, and the vertical and horizontal curving capability would be improved, bringing the HSST System closer meeting several of the FTA recommendations.

Propulsion: Another possible enhancement to the HSST is to increase the LIM thrust capacity and improvements in its control strategy. As part of a weight reduction effort, there may be streamlining to some of the related electrical equipment such as the propulsion invertors etc.

As previously mentioned, this would contribute in the simplifying of the under frame, and improving the vertical and horizontal curving capability of the vehicle set.

Modules: In summary, by increasing the levitation magnet capability by 50% and by increasing the LIM thrust by a similar percentage, some dramatic savings in weight could be achieved: the number of modules on the 100L could be reduced from 10 to 6, saving 2.6 tons. The total vehicle weight savings could be in the range of 5 metric tons with improvements to other on board sub-systems.

Other Sub-Systems: The following subsystems could be made more compatible to US standards by utilizing non-maglev specific, US produced systems: the doors and operators, the HVAC system, the APU/converter, the air compressor, the seats, the windows and the cabling. The repackaging of the under body equipment enclosures and the streamlining of the heavy castings of the modules structure would additional weight reductions. The use of more state-of-the-art cooling for the LIM and Invertors could also benefit the weight, space budget and system performance.

8.2.2 Hydraulic Braking Subsystem

Two alternative braking schemes were investigated. The first is the potential use of the landing skids, which are used as parking brakes in the current design. The modules have a coefficient of friction that ranges between 0.15 and 2.0 for the interface between the landing skid shoes and the rails. The maximum braking force that could be generated by the landing skid is limited by the coefficient of friction of the landing skid shoes. Varying the number of landing skids that would be allowed to contact the rails could control the

braking rate. In the case of the 100L vehicle configured in a three-car train, there would be thirty levels of braking force that could be applied.

The other potential alternative that has been studied is to use the levitation magnets to provide braking forces. The magnet shoe that is installed on the magnet pole surface also has a coefficient of friction that ranges between 0.15 and 0.2. Braking forces could be applied to the vehicle when the levitation magnets attract to the degree that the magnets cling to the rail. Adjusting the current in the electromagnets could control the braking force.

It was determined that the landing skid braking scheme has the most potential because:

- The landing skid brakes are fail safe – they work in case of a power failure;
- The allowable wear thickness of the skid is much larger that that of the magnet shoe; and
- The landing skid shoe is much larger that that of the magnet, reducing the overall wear and extending the shoe's life.

In order to properly evaluate the potential of using the landing skids as part of the "normal" vehicle braking system and eliminate the hydraulic brakes, a number of further studies and tests are necessary. Some of these are:

1. Maximum deceleration rate – A new material for the skid shoes may be necessary in order to achieve the 0.36g requirement of the FTA.
2. There is a potential of the vehicle "hopping" when initially dropping onto the skids. This must be controlled or eliminated in order to better control the braking rate.
3. The emergency roller system must be redesigned in order to achieve the benefit of eliminating all hydraulics on board the vehicle.
4. Develop another means of preventing the vehicle from rolling down a slope when on its emergency roller system.
5. Develop a means of evaluating and incorporating the time delay between activation of the skid brake command and the vehicle dropping onto the skids, into the braking profile.
6. Completion of the development of an optical velocity sensor that would provide more precise velocity data than the present IR cable.
7. Expand the range of application of the electrical braking in order to minimize the use of the landing skids. This means that electrical braking should be capable for the full stopping profile. With the more precise velocity information, it is felt that controlling the vehicle speed to zero and holding it at zero speed is achievable with electric brakes alone.
8. Decrease the noise that occurs when the landing skids are applied at high speed.
9. The magnetic guidance force is lost when all modules are turned off and all landing skids are deployed. This may impact ride quality.

The hydraulic braking system as it presently exists satisfies all of the requirements that have been established for applicability in the U.S. It satisfies all of the appropriate codes

and standards, does not pose any safety risks beyond those typical for mass transit systems, and operates efficiently, reliably, and is relatively easily maintainable.

8.2.3 On-Board Power / Energy Efficiency

Chubu-HSST vehicles operate from a 1500 VDC distribution system. The possibility of operating from 750 VDC, which is more common in the U.S. was investigated. In order to utilize a power rail voltage of 750 VDC, a number of design changes would have to be implemented in order to obtain the same vehicle performance. One option would be for the LIMs to be redesigned. Another approach could be to change the interconnection schemes of the LIMs from two parallel chains of five in series, to five parallel chains of two in series. This approach may increase the need for inverters, with its attendant space, weight, and cost implications. In addition to the changes required in the LIMs, there are other less significant changes that would result in the decrease in power distribution voltage. For example, with a decrease in voltage, there would be a correspondingly increase in current drawn by the LIMs. This would result in an increase in the size of the wires along the guideway and on-board the vehicles. This may also result in an increase in the number of power collector shoes as well.

The Onboard Power system as it presently exists satisfies all of the requirements that have been established for applicability in the U.S. It satisfies all of the appropriate codes and standards, does not pose any safety risks beyond those typical for mass transit systems, and operates efficiently, reliably, and is easily maintainable.

8.2.4 Automatic Train Control

The Chubu experience with train control has been primarily based on their experience with the relatively short track, simple shuttle service of expo-type operations. Although the system as currently installed at the Nagoya test track is an automatically aided manually operated system, it appears to have many of the features needed for fully automated train control. However, a fully automated operation has not been demonstrated. The FTA requirements call for a full automatic operation of the Maglev system.

It is understood that the driver's station will be eliminated for the planned Tobu-Kyuryo Aichi Prefecture system. The driver's operational role must be integrated into the ATC system. The details of the full automatic control system architecture need to be supplied and evaluated. In particular, the safety-critical thrust controller architecture must be provided. Additionally, there are still a number of questions, which will require further inquiry of the exact roles and operation of the various functions contained within the current and envisioned changes to the automatic train control system.
Finally, a risk assessment must be provided on the complete automatic control system, as it will be used in the U.S. The safety risk assessment must also include all safety critical systems incorporated into the CHSST.

8.2.5 Emergency Evacuation

The most efficient and safest way to evacuate the vehicle would be from the side doors. Evacuation could be accomplished in one of two ways. For non-fire situations of a disabled train on the guideway requiring passenger evacuation, a spare train could be brought up alongside the stranded vehicle and a gangplank suspended horizontally between the vehicles. Evacuation would be reasonably quick with no encumbrances to negotiate or climb over. Alternatively, an emergency walkway could be suspended in the center of the dual guideway such that the walkway surface would be at the same level as the floor level of the vehicle. A short ramp is all that would be required to evacuate the vehicle quickly.

8.2.6 Modifications to Vehicle to Meet U.S. ADA Requirements

The following summarizes recommended vehicle modifications:

- Design and construct the vehicle with clear opening width of the side doors on the vehicle 81.5 cm (32 in), instead of the current 80 cm.
- Feasible with a small additional cost of 100L vehicle.
- Widening the clear width of the aisle between seats, stanchions and handrails on the vehicle, to be at least 82 cm wide to allow wheelchair access, instead of the current 60 cm width.
- Feasible with decrease in number of seats on each vehicle.
- Providing a vehicle door chime or buzzer to alert the blind passenger to the door location (inside and outside the vehicle).
- Easily feasible at minimal cost.
- Providing physical external protection between the cars to prevent blind persons on the platform from falling between cars.
- Feasible with a small additional cost of 100L vehicle.
- Verify 100L vehicle currently meet lighting requirements so that all doorways shall have, when the door is open, at least 2 foot-candles of illumination measured on the door threshold.
- Light level will be verified, but the emergency lighting system powered by on-board batteries is already provided.

8.3 Ranking of the Key Recommendations

Based on the modifications and improvements discussed in the previous sections (8.1 and 8.2) the MUSA Team has ranked the changes as follows:

1 Simplification of Rail Fixation Method
2 Value Engineering of Guideway Structure
3 Reduction of Vehicle Weight
4 Automatic Train Control
5 Efficient Emergency Evacuation
6 Meeting ADA Requirements
7 Increase Capacity of Levitation System

8 LIM Redesign to Utilize 750 VDC Distribution Center
9 Utilize Design/Build Option in the Bidding Process

This ranking reflects, in descending order, what would take the least effort to make the modification without major redesigns. For example, simplifying the Rail Fixation Method may be adapted most readily, whereby increasing the Levitation Capacity, would require a major redesign of the modules.

8.4 Work for Future Phases

A number of comments and recommendations have been made in each of the chapters of this report for potential improvements to the CHSST system to satisfy the U.S. mandatory and FTA requirements. An outline plan of action on the recommendations is presented in the following paragraphs for consideration by the FTA.

It is clear that some of the FTA system requirements are both generic and site specific. Even then, the CHSST Maglev will need some upgrades and design modifications to meet the U.S. mandatory and the FTA requirements. The following measures should be taken to enable this system to be deployable in the U.S.

8.4.1 Next Phase

The purpose of the near term work is to provide additional analysis and test data on technical issues raised in this report, including:

- Analyze the guideway structure and component life for 160 kph operation in view of the fact that the guideway permanent structure is expected to serve for 75 years. Also, analyze the life of attachments and the impact on maintenance strategy and cost.

- Estimate the frequency of inspections, and associated costs for correcting guideway irregularities.

- Analyze the vehicle dynamic behavior under worst possible combinations of guideway tolerances, and ensure that no instabilities occur and the FTA ride quality requirement is satisfied at least at 130 kph speed.

8.4.2 Future Phases

The purpose of these future phase activities is to assure the readiness of the CHSST system for deployment in the U.S.

- Monitor the progress in Nagoya on the technology, financing and construction for the proposed 9.2 km Tobu-Kyuryo revenue line. Upgrade the proposed system in the U.S. on the basis of any relevant improvements and experience gained in Japan. Some additional testing specified in this report can possibly be carried out on the Tobu-Kyuryo guideway proposed in Japan. The Tobu-Kyuryo Line signal system may not

be designed for speed of 130 kph and the Nagoya test track is too short for 130 kph runs. CHSST should examine the feasibility of 130 kph test demonstrations.

- Test, evaluate and perform endurance tests on a suitable test track the design changes implemented of a CHSST system suitable for deployment in the U.S.

- A fully automatic train control system provides the principal means of longitudinal control and safety. Therefore, an independent safety risk assessment consistent with current FTA guidelines must be performed prior to the CHSST being given approval for operation in the U.S. This assessment also should provide independent validation and verification of all the safety-critical control functions.

- Develop financial partnership and deployment plans for selected routes in the U.S.

APPENDICES

APPENDIX A

STRUCTURAL DESIGN CRITERIA FOR CHSST-100L VEHICLE

Introduction: *This document was adapted from a CHSST document titled "Peculiar Condition for Guideway Design" prepared in June 2002. It summarizes the loads, load combinations, and allowable displacements of the guideway structure that will be considered for the CHSST-100L system that will be constructed for the Tobu-Kyuryo line in Nagoya, Japan. The document is to be considered strictly for reference purposes only because it reflects loads and load combinations that are applicable in Japan only. To comply with United States design codes and standards some adjustments would be made to the design load combinations and safety factors. Wind loads, earthquake loads and other loads that vary according to location, would all need to be specifically reviewed for the site in the United States where the system would be located.*

The design conditions for the CHSST guideway described in this document are based on the "Working Stress Design Method", (i.e. the guideway is designed to have the concrete and the reinforced rod remain within an allowance limit in a normal condition). In addition, the deflection and the deviation of the guideway are designed so as not to interfere with the vehicle operation.

1. DESIGN LOAD

1.1 Definition

D	Dead Load (consisting of girder and accessory weight)
Ac	Accessory weight
L	Vehicle weight
I	Vehicle dynamic load (Impact load)
C	Centrifugal load
Lf	Vehicle lateral load
B	Braking load
A	Acceleration load
FL	Module drop load
Fm	Magnet maximum drop load
SL	Skid sliding load

1.2 Accessory Weight (Ac)

Accessory load shall be finalized in the course of guideway configuration design.
Typical accessories are shown below for reference.

Rail and attaching parts	300 kg/m
Sleeper and attaching parts	165 kg/m
Trolley rail and support fitting	30 kg/m
Cable trough	45 kg/m
Others	10 kg/m
Total	550 kg/m

1.3 Vehicle Weight (L)

- Vehicle weight works in the vertical direction as an equally distributed load as shown in **Figure A-1.**
- Vehicle weight works on the centerline of the rails at a distance of 850 mm (28"-15/32) each from the center of guideway. Refer to **Figures A-2 and A-3.**

- Vehicle weight is shown in the following table:

Vehicle Condition	Symbol	Amount of Weight	
		On each Rail	On the guideway
Maximum loaded	Lfl	1150 kgf/m	2300 kgf/m
Empty	Lva	700 kgf/m	1400 kgf/m
With Average Passenger Load	Lcp	1050 kgf/m	2100 kgf/m

The design condition of the guideway with regards to vehicle operations is:

Guideway	Condition	Vehicle Weight
Main Line Track	Normal Operation	One Train (3 cars) with Maximum Load
	Rescue Operation	Above Train + One Empty Train
Side Track	Normal Operation	One Empty Train
	Rescue Operation	Two Empty Trains

Note: The above design condition based on Tobu-Kyuryo line which is a three car consist

1.4 Vehicle Dynamic Load (I)

Vehicle dynamic load (I) is the product of vehicle weight (L) and the dynamic load factor (i) shown in (1) or (2) below:

$I = L \times i$

(1) Dynamic load factor on PC (Pre-stressed concrete) beam

$i = 0.10$ Span length of beam, $s \geq 20$ m

(2) Dynamic load factor on steel beam

$i = 0.15$ Span length of beam, $s \geq 20$ m

1.5 Centrifugal Load (C)

Centrifugal load (C) is the equally distributed load working in a right angle and horizontal level to guideway at 1200 mm (3'11"-1/4) height from rail datum level.

Centrifugal load (C) is the product of vehicle weight (L) and the centrifugal load coefficient (αc) shown as follows.

$\alpha c = V^2 / (127 \times R) \leq 0.216$ V Vehicle speed (km/hr)
R Radius of circular curve(m)

1.6 Vehicle Lateral Load (Lf)

Vehicle Lateral Load (Lf) is the equally distributed load working on four adjacent modules around coupler as shown in **Figure A-4.**
This load is the product of vehicle weight (L) and coefficient 0.15.

1.7 Braking Load and Acceleration Load (B & A)

Braking load and acceleration load shall be applied at the point of 1200 mm (3'11"-1/4) above the rail datum level in parallel with guideway.
Braking load is the product of vehicle weight (L) and coefficient 0.15.
Acceleration load is also the product of vehicle weight (L) and coefficient 0.1.

Braking load and acceleration load shall not be worked at the same time and same vehicle.

1.8 Module Drop Load and Magnet Maximum Drop Load (FL & Fm)

Module drop load is applied at both landing skids located at the forward and rear ends of the module when it falls down onto the rail due to a sudden loss of levitation force. However, at that time no vehicle weight (L) need to be accounted for on the rail at this location. Module drop load is a concentrated load working on the rail vertically. (Refer to **Figure A-5)**

Module drop load is 2400 kgf (5333 lb) per one landing skid. This load shall be considered to occur on one module per one train (three cars).

When one magnet of the module is attracted to the rail upper surface immediately, magnet maximum drop load is applied at landing skid located nearer to subject magnet. However, at that time no vehicle weight (L) need to be accounted for on the rail at this location. This load is a concentrated load applied to the rail vertically. (Refer to Figure A-6)

Magnet maximum drop load is 2700 kgf (6000 lb) per landing skid. This load shall be considered to occur on one magnet (half module) per one train (three cars).

1.9 Skid Sliding Load (SL)

When all the landing skids of an entire train (three cars) are landing and sliding on the rail, the skid sliding load is applied to the point of 1200 mm (3’11”-1/4) above the rail datum level parallel with the guideway axis.

(1) Skid sliding load is the product of vehicle weight (L) and coefficient 0.15 (for steel beam) or 0.10 (for PC beam).

(2) Skid sliding load is a concentrated load working on the rail vertically.

2. ALLOWABLE DISPLACEMENT OF GUIDEWAY STRUCTURES

2.1 Allowable Deflection of a Girder

Allowable deflection of a girder caused by the vehicle weight is calculated using the following formula.

$\delta a = s / 1500 \qquad 20 < s \leq 25m$ where: s = span length of girder

$\delta a = s/1500 + [1/1300-1/1500] \times s(s-25)/15$ for: $s > 25$ m

Vertical load conditions to confirm (check) deflection of each girder are as follows:

Main line track	Maximum load	2300 kgf/m (1546 lb/ft)
Side track	Empty load	1400 kgf/m (941 lb/ft)

2.2 Horizontal Displacement (Rail Joint)

A rail attack angle caused by displacement or deformation of girder support structures such as piers shall be limited for smooth operation of vehicles. It is limited to the following values.

	Conditions	Rail Joint Angle Limit
A	Except (B)	7 / 1000 radian
B	Earthquake Condition	20 / 1000 radian

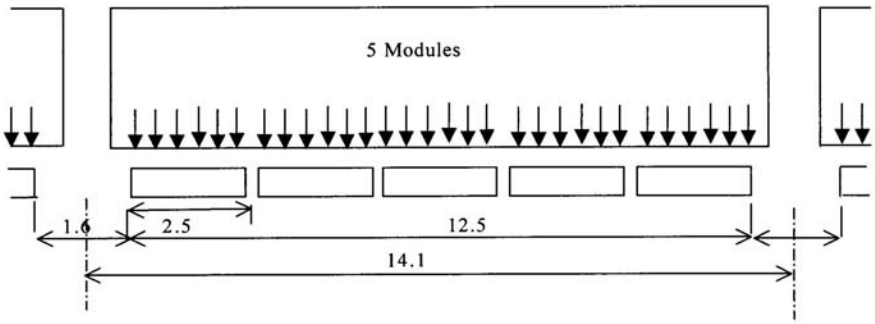

Figure A-1

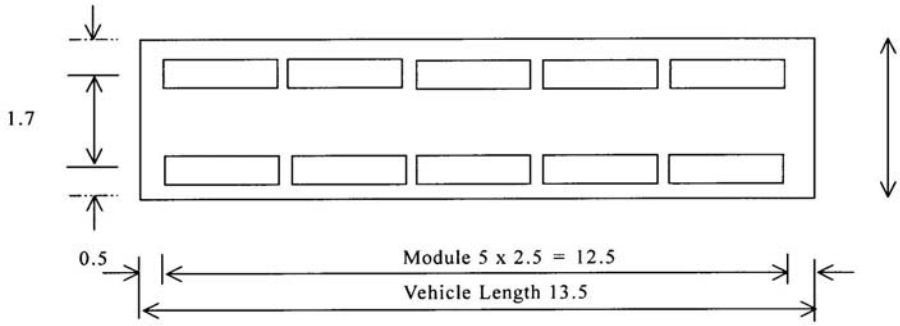

Figure A-2

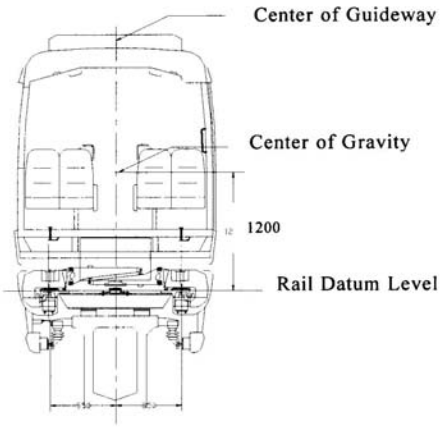

Figure A-3 Unit: mm

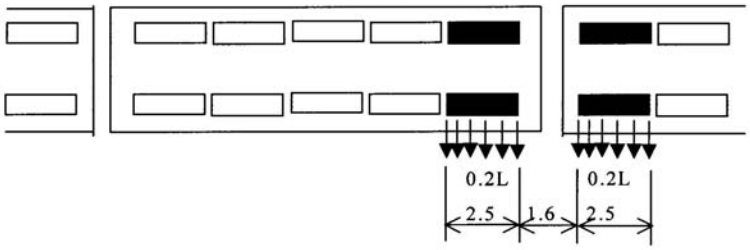

Figure A-4

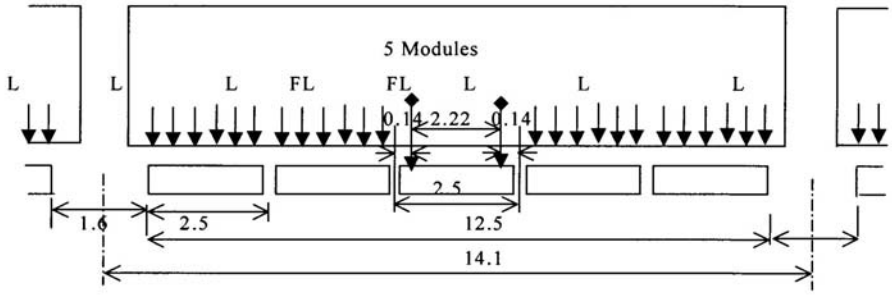

Figure A-5

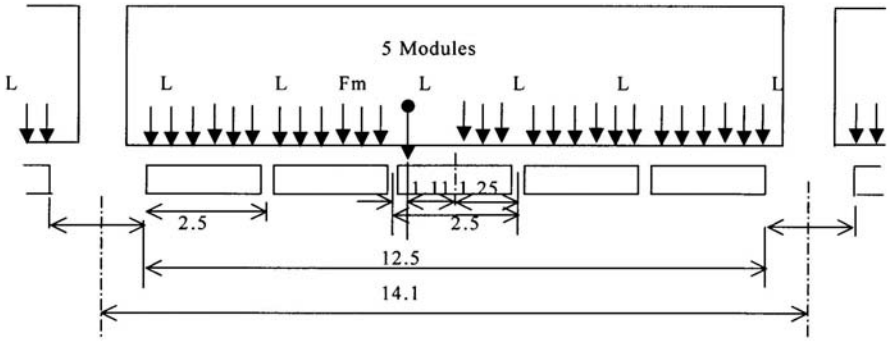

Figure A-6

APPENDIX B

ALIGNMENT CRITERIA FOR CHSST-100L SYSTEM

Introduction: *This document has been adapted from a CHSST document titled "Peculiar Condition for Guideway Alignment" prepared in June 2002. It addresses required construction clearances, sets forth the design criteria for horizontal curves, and defines the maximum gradient and the minimum distance between the centers of the guideways. A table is also included that defines the precision requirements for the installation of the rail, including such items as: track gauge, vertical and horizontal displacement between adjoining rails, difference in rails; and deviation in alignment along the length of the rail.*

1. CONSTRUCTION CLEARANCE

		Outline	Detail at Guideway
Straight Line	Ordinary Line -Platform -Platform Door		
Circular Curve	R = 330ft (100m)	See Note 1	See Note 2
	R ≥ 330ft (100m)		
Transition Curve	All	See Note 3	

Note 1:
The construction clearance at a circular curve is bigger than it is along a straight line because of vehicle rolling. The amount of expansion at a circular curve is calculated as follows and shown in the sketch below:

$$W = 16000 / (R \times 0.3048 \times 25.4) = 2067 / R$$

where: W = amount of expansion (inches)
R = curve radius(feet)

The amount of expansion "W" should be added to both sides of the construction clearance for a straight line.

Note 2:
When the curve radius is less than 330 ft (100 m), the vehicle needs to be operated at low speed. For sidings and curve transitions into maintenance facilities, a curve radius of 250 ft (75) can be accommodated.

Note 3:
The amount of expansion at transition curves is diminished successively from the "Beginning of the Circular Curve" (BCC), to a point that is 50ft (15 m), approximately a vehicle length, back from the "Beginning of the Transition Curve" (BTC).

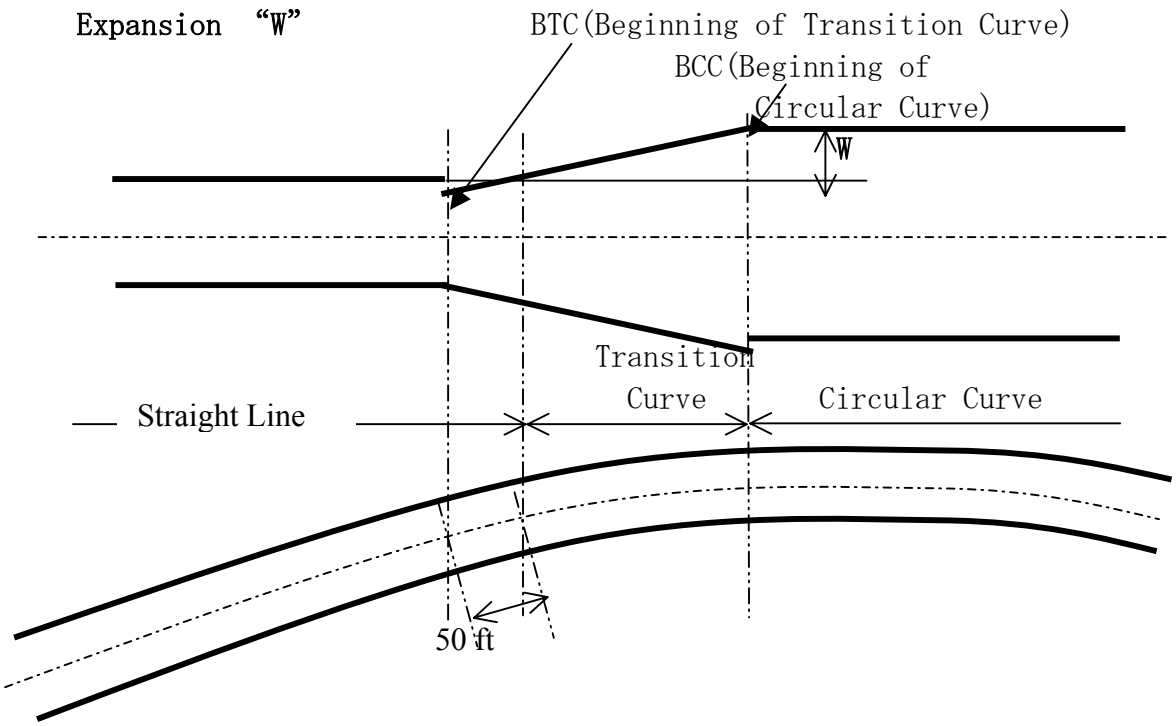

When no transition curve exists and the straight line is connected with the circular curve directly, the amount of expansion is diminished successively from the BCC to a point that is 50 ft (15 m) farther into the straight line.

2. HORIZONTAL CURVE

2.1 Radius of Circular Curve

The minimum radius of a circular curve that allows reasonable speed of operation along the alignment is 330 ft (100 m) along the main track. Any circular curve must have a radius larger than this minimum radius.

2.2 Transition Curve

In the main track, a transition curve should be installed between the straight line and the circular curve, or between two different circular curves. This rule does not apply however in the track switch areas or maintenance area where the train passes through at a low speed.

The length of the transition curve should be the largest of the three values (L1, L2 or L3) calculated from the following three expressions:

(i) Based on the permitted amount of air-suspension stroke on the vehicle

$$L1 = 24.34 \times C$$

(ii) Based on ride comfort: Depends on permitted amount of angular velocity loading to vehicle:

$$L2 = 0.61 \times V \times C$$

(iii) Based on permitted amount of increasing/decreasing rate of centrifugal acceleration:

$$L3 = 30.381 \times V \times \alpha$$

Where:

L1, L2, L3 = Length of the transition curve (feet)

C = Super Elevation angle (degree)
*When a transition curve is installed between two circular curves directly, the difference between each super elevation angle of curve will be applied.

V = Vehicle speed (km/hr)

α = Exceeding centrifugal acceleration(g)
*When a transition curve is installed between two circular curves directly, the difference between the two exceeding centrifugal acceleration will be applied.

2.3 Length of Straight Line between Transition Curves

In the main line track, a straight section of line of 46 ft (14 m) or more should be installed between two transition curves. However in the middle of an "S" shape curve, if 46 ft (14m) or more of a straight section of line cannot be installed, the straight section line may not be installed, and the two transition curves may be connected directly.

2.4 Length of Circular Curve

In the main line track, the length of a circular curve should not be less than 46 ft (14 m). However, in the track switch and its connection area where the train passes through at low speed, this rule does not apply.

2.5 Super Elevation Angle

In the circular curve section of the line, except the track switch area, the rail datum plate should be inclined toward the inside of the curve. The ideal super elevation angle is calculated by the following formula:

$$C1 = \tan^{-1}\{V^2/(38.712 \times R)\}$$

where:

C1 = Ideal super elevation angle (degrees)
V = Vehicle speed (km/hr)
R = Radius of circular curve (ft)

However:

(i) Maximum super elevation angle should be 8 degrees.
(ii) When the ideal super elevation angle "C1" cannot be adopted for some unavoidable reason, deduction of angles from the ideal "C1" is allowed within 0.075g lateral acceleration.

If the super elevation angle "C2" as calculated by the following formula is smaller than the above "C1" value, the super elevation angle should be set to "C2" or less.

$$C2 = \sin^{-1}\{R / 4900\}$$

where:

C2 = Super Elevation angle (degrees)
R = Radius of circular curve (ft)

Irrespective of the result of the two formulas above, if the circular curve is laid to overlap a depressed vertical curve, the super elevation angle should be set to "C3" or less.

$$C3 = \sin^{-1}\{R\,(Rv - 4900) / 4900\,Rv\}$$

where:

C3 = Super Elevation (degrees)
R = Radius of circular curve (ft)
Rv = Radius of depressed vertical curve (ft)

The super elevation angle is established by the following method:

1. Keeping the height of the rail datum plane.
2. Down the inside rail and up the outside rail
3. Super Elevation angle made by two lines, which are rail datum level and the horizontal level

2.6 Diminishing of Super Elevation Angle

Super Elevation angle is diminished successively over the full length of the transition curve.

3. GRADIENT

3.1 Maximum Gradient

Maximum Gradient is 7 %.

However, the gradient of the following segments of the guideway must be kept level for obvious reasons:

- Track switch area
- Station platform
- Vehicle parking area including maintenance yard

3.2 Vertical Curve

A vertical curve with a radius of 4920 ft (1500 m) or more must be installed when the gradient is changed.

4. DISTANCE BETWEEN RAIL CENTERLINES

4.1 Straight Line

The minimum distance between the rail centerlines of a dual guideway is 12.6 ft (3.85m) along a straight section of the alignment. [*Note: At locations along the Tobu-Kyuryo Line (TOBU-KYURYO) where an emergency aisle is installed, the distance between the rail centerlines will be 14.1 ft (4.3 m) at a minimum*].

4.2 Circular Curve

At a circular curve, the minimum distance between the rails specified in Paragraph 4.1 above, needs to be increased by "W" in accordance with the following equation:

$$W = 4140 / R$$

where:

W = Amount of expansion (inches)
R = Curve radius (ft)

5. PRECISION REQUIREMENT FOR RAIL INSTALLATION

The precision requirements for rail installation are shown in the following table and are shown graphically in Figure B-1.

	Item	Construction Allowance	Limit	Remarks
A	Track Gauge	3 mm (0.12 in)	5 mm (0.2 in)	Distance between Rail Centers
B	Rail Joint Step	1 mm (0.04 in)	1 mm (0.04 in)	Both Vertical and Lateral Step
C	Lateral Dip	1 mm (0.04 in)	2 mm (0.08 in)	Per Rail Flange Span Width 220 mm (8.66 in)
D	Difference In Level	3 mm (0.12 in)	5 mm (0.2 in)	Difference between Rail Levels
E	Deviation from Alignment	3 mm (0.12 in)	5 mm (0.2 in)	Lateral and Vertical Deviation from Alignment Every 10 m (32.8 ft) long

Fig.1 Vehicle & Construction Clearance／Outline

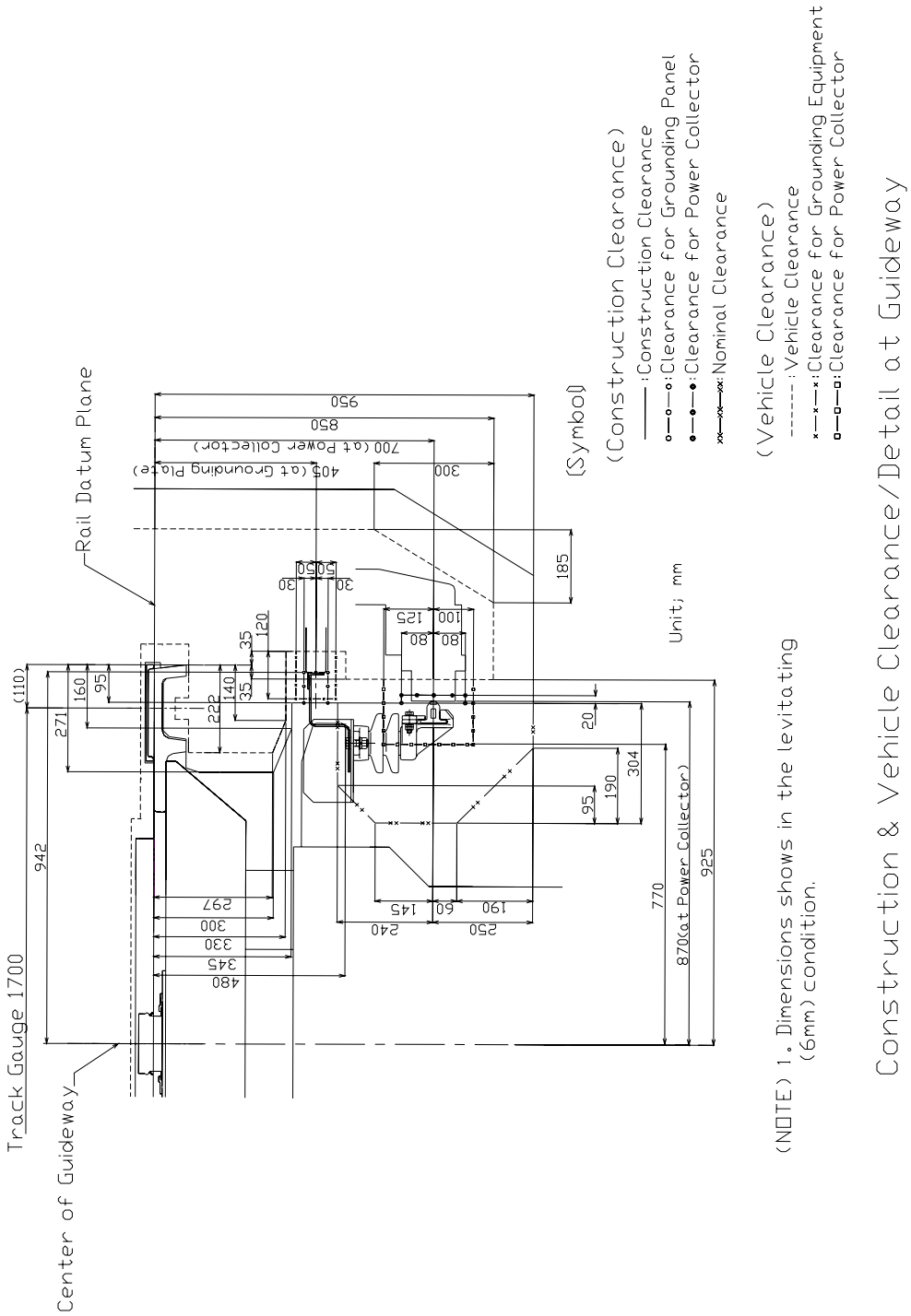

Fig.2 Vehicle & Construction Clearance／Detail at

A. TRACK GAUGE

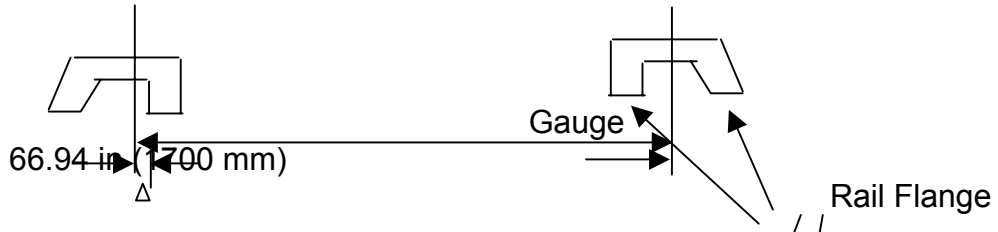

B. RAIL JOINT STEP

Vertical ***Lateral***

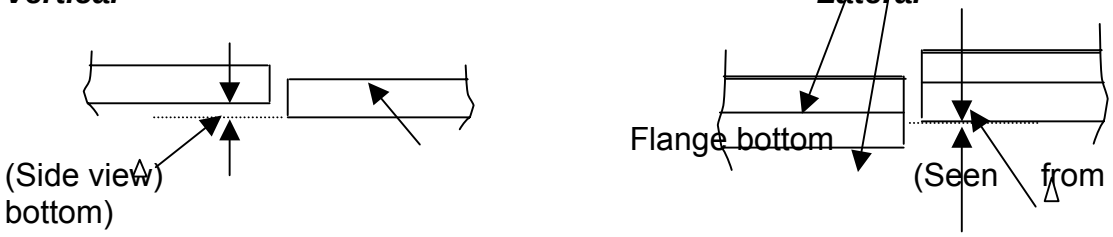

C. LATERAL DIP

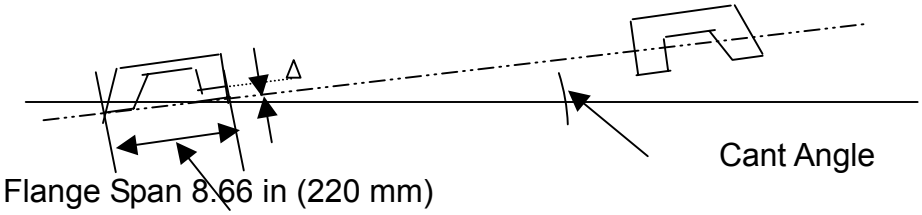

D. DIFFERENCE IN LEVELS

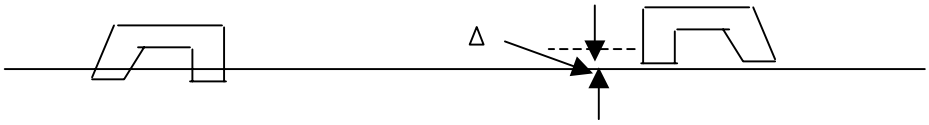

E. DEVIATION FROM ALIGNMENT

Vertical ***Lateral***

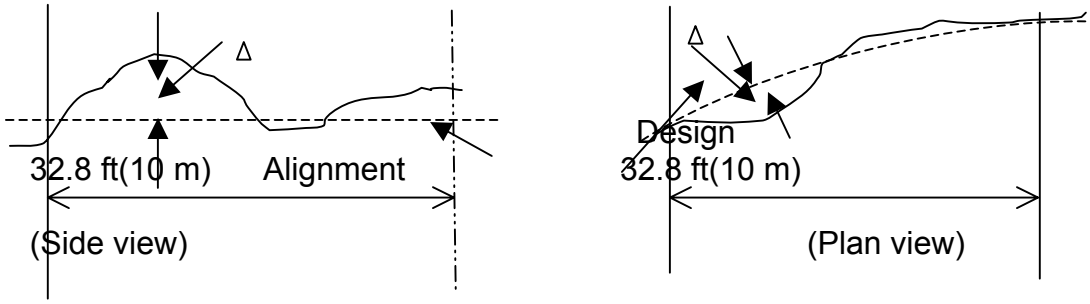

APPENDIX C

STRUCTURAL CHARACTERISTICS FOR CHSST 100S VEHICLE

This Appendix contains a discussion of the approach to load cases, car body structural integrity, levitation and propulsion module structure, design and manufacture standards, collision performance, glazing requirements, coupler requirements and pilots and snowplow requirements for the CHSST 100- type vehicles. This Appendix also describes structural characteristic of the CHSST 100S vehicle relative to exiting rapid transit vehicles such as automated people movers. It is projected that the HSST 100-series vehicles in a US application will meet or exceed the current US vehicle structural design and crashworthiness requirements specified by the ASCE APM standards, Part 2.

1. Load Cases

A series of service load cases and worst-case loads are specified in several existing documents for conventional rail vehicles. However, the actual design loading specified for conventional rail vehicle of different types are not applicable to Maglev vehicles, due to different vehicle and train weight, and application.

HSST- 100 S Vehicle: Vehicle structure load cases similar to these of German Transrapid were identified during the design process and developed for HSST vehicle structural design. Static (service and worst case) and fatigue load cases were clearly distinguished, and fatigue load cases specified together with the fatigue life (endurance) requirements. The load cases reflect all phases of vehicle operation (acceleration, maximum speed operation, braking, etc.) and include expected system malfunctions (for example, operating with a failed suspension or propulsion unit, i.e., 4 cars in the train consist, *0.25* skid plate friction coefficient). Maximum design 100S vehicle weight is 33,069 lbs/car *(15* metric tons/car). Maximum cross wind is 164 ft/sec *(50* m/sec). A safety factor of *1.5* is used.

2. Car Body

The car body is designed for minimum 20 years of service, i.e., 120,000 operating hours or 2 million cycles (start-up, levitation, acceleration, braking, etc.). The structure completely satisfies the ASCE Standards for Automated People Movers. The vehicle operating stresses as a result of normal service loads do not exceed 75% of the material allowable fatigue stress range. Stresses resulting from all worst case possible combination applied, including a load factor of 1.5, do not exceed the material yield strength of any structural element or connection. Under the combined maximum vertical load and an end- load applied horizontally at the end structure equivalent to the weight of empty vehicle, stresses in the principal framing members are not greater than the yield strength of the associated structure. The 100S car body is also designed to sustain 44,090 lbs (20 metric tons) compression load without permanent deformation, significantly exceeding the ASCE requirement. Actually, the 100S car body almost satisfies the 2g practice for light rail (compression load is usually 2 times the empty vehicle weight). Under frame (floor level frame) serves as a principal load path. It resists compression and tension loads transmitted through the couplers, and other loads transmitted to the modules via air suspension, thrust rods and “sliding tables”. Any roof area intended to be traversed by personnel, is capable of supporting a minimum of point load of 250 lbs over a 6 inch x 4 inch area, without permanent deformation. In addition the elastic deformations occurring under any loading conditions, do not interfere with normal and

safe operation of the vehicle, or any system, including door operation. The car body structure design was not determined only from the strength requirements; the guiding factor was minimum stiffness necessary for a good ride quality. Natural frequencies for the first bending modes are 17.2 Hz and 13.5 Hz for the vehicle empty and fully loaded weights, respectively. The induced loading on a car body as a result of module failure (loss of hover), i.e., module dropping, are not significantly different from those under the normal service (0.2 g in lateral and longitudinal direction).

Lifting loads are also considered in the design of vehicle structure. Adequate attachment points are provided, as required for handling the vehicle. The vehicle structure design considers handling and lifting loads, using empty vehicle weight. Lifting and handling loads do not exceed material yield strength of any structural member including a load factor 1.5.

The vehicle floor is designed based on Japanese Industrial Standard (JIS) whereby a floor panel is designed to sustain 60 kg x 10 standees in one sq. m. This translates to 600 kgf/m^2, which equals 123 lbs/ft^2. This Japanese standard compares very favorably with the US standards for vertical load based upon "crush" loading condition in the ASCE Automated People Movers standard: empty vehicle plus 107 lbs/ft2 multiplied by the standee floor area plus 160 lbs per seat multiplied by the number of non-removable seats.
The floor panels are also capable of withstanding the point load of 300 lbs applied with a 0.78" diameter steel ball, while the ASCE standard is asking for 160 lbs over a 0.5 inches diameter circle. With an additional steel sheet over the aluminum face layer the floor panel has successfully passed the ASTM E 119 standard fire test.

According to ASCE Standards for Automated People Movers, each seat pan, seat structure and attachments to the structure shall support, without permanent deformation, a minimum of 485 lbs vertical load applied uniformly at each seating position. The existing HSST-100S secondary structure supporting the equipment and the seats are designed to accommodate the weight of the average passenger (160 lbs), plus the following overload accelerations: 3.0 g longitudinal, 3.0 g vertical and 2.0 g lateral. This means that the HSST attachment design exceeds the ASCE requirements. In a US application stanchions will be rigidly attached at each end, rattle free, and will withstand a horizontal load of 200 lbs in any direction.

Doors, supporting tracks and linkages will withstand a minimum force of 220 lbs applied at right angles at the center of a panel and distributed over an area of 4 inches x 4 inches without permanent deformation or binding of the door mechanism.

Under floor equipment secondary structure (attachment structure, brackets, etc.) will be designed to incorporate overload acceleration factors as follows: 0.3g longitudinal, 1.0g vertical and 0.5 g lateral.

3. Module

The module main body consists of two end boxes and an upper beam mechanically joined. The module is equipped with gap sensors, landing skids, emergency rollers, LIM, electromagnets for levitation and hydraulic brakes. The left and right side modules facing each other are connected in pairs and coupled with a beam mechanism. Propulsion force is transmitted to car body by thrust rods and "sliding tables". Levitation force is transferred to car body via air suspension and sliding tables. The module is designed following the same principles as the car body, i.e., for minimum

of 20 years in service, 120,000 operating hours, or 2 million cycles. Actual module weight on the existing 100S vehicle is 1,430 lbs (650 kg), and the maximum attractive Electromagnetic Suspension (EMS) force is 5,500 lbs (2.5 metric tons)/module (each magnet generates 672 lbs/ft of levitating force). Maximum deflection of magnetic core is 0.04" (1.0 mm).

For sliding on the landing skids (0.125 friction coefficient) the following load -factors were anticipated:

1.0 g Longitudinal direction
0.5 g Lateral direction

The thrust rod/thrust link and anti-rolling beam were designed to withstand all service and worst-case conditions below the yield strength of materials used.

4. Design and Manufacture

A Maglev vehicle is considered to be between a conventional rail vehicle and an aircraft with respect to structural failure risks. Apart from suspension components, there is less possibility of an undetected structural failure having catastrophic consequences comparable to those that could follow the failure of an aircraft structure. The vehicle is close to the ground, and support and guidance functions are performed by a suspension system built to separate requirements. However, low weight is more critical in Maglev vehicle design than for conventional rail vehicles in order to minimize the weight and energy consumption of the magnetic levitation system and the weight of guideway structure. Also, greater use is made of light alloys that require more careful consideration of strength and fatigue properties during the design, than the steels traditionally and customarily used in North America rail vehicles. They have required more detailed and thorough structural analysis and quality control during the manufacturing process than a conventional rail vehicle design.

HSST-100S Vehicle: The vehicle, i.e., car body is designed of aluminum alloy as semi-monocoque lightweight structure. Design, analyses, allowable stresses and safety factors, materials and manufacturing process all conform to established engineering practices, as specified by recognized organizations, such as DIN, ASTM, ANSI or Japan Industry Standards (JIS), for the same or similar purpose. In more detail, the following will be satisfied:

- All materials will be manufactured to specifications issued by recognized organizations (JIS) under strictly controlled circumstances, for which relevant performance data are available.

- Working stresses, fatigue life and safety factors used in the design will be comparable to those used for the same materials for an equivalent purpose (people movers or monorail, see previous section). In particular, structural safety factors reflect the severity of consequences of failure of each part of the structure. In the HSST-100S design, the safety factor is equal to the factor utilized in the aircraft industry.

- Manufacturing processes such as welding, will be carried out to recognized specifications developed for an equivalent purpose, including the qualification of welders and similar skilled labor used in vehicle manufacture (JIS Z 3811, JIS Z 3040, JIS E 4050, etc.).

- The structure will be protected by finish coating system (corrosion resistant primer) so that it does not sustain a corrosion damage during its structural design life.

- Joining with fasteners will be performed in accordance with an applicable standard. Structural joints will satisfy the following standards:

  (1) JIS B 1180, JIS B 1181 (for fasteners)
  (2) JIS E 4050, JIS Z 3040 and JIS Z 3811 (for aluminum and aluminum alloy)

- Joining of dissimilar materials will be performed according to HSST's internal standards, which are similar to U.S. standards. Bonding, including chemical and thermal adhesion, will be performed in accordance with proven, documented HSST's or industry procedures or standards.

5. Collision Performance

The traditional approach to specify collision performance in conventional rail vehicles such as in the FRA, AAR and UIC requirements, is to specify minimum buff strength, collision post strength and other design loadings. These requirements have evolved out of long experience of the behavior of conventional rail vehicles in accidents. There is no equivalent experience for Maglev vehicles, due to different control system capabilities and vehicle weights.

The overall question of collision performance requirements for High Speed Ground Transportation (HSGT) vehicles of all types (wheel-on-rail and Maglev) and the relationship with operations control system performance has been examined in an FRA study on collision safety. The basic conclusions of the study are:

- A system approach should be used to develop collision safety requirements for an HSGT system, consistent with an overall system safety requirement specified in terms of a risk profile, i.e., accident frequency versus severity.

- Within the system approach, all HSGT vehicles should have a minimum collision performance to ensure that extremely flimsy vehicles are not put in service.

- Above this minimum, the required collision performance is a function of the hazards to which the vehicle is exposed, which depends on the performance of the collision avoidance system.

- The most suitable way of specifying collision performance is to define the minimum level of protection that the structure must provide to vehicle occupants in defined vehicle collision scenarios. Scenarios applicable to the overall vehicle structure are: collision with another Maglev vehicle; collision with debris and other smaller objects on the guideway; and, the impact of a bullet.

HSST-100S Vehicle: In the study of collision safety, the FRA has developed a collision performance requirement in which performance is defined as a maximum acceptable vehicle damage and acceleration levels in a specified collision. Defined in such a way, the collision performance specification can protect vehicle occupants from injury due to excessive vehicle crushing or high deceleration, without being specific to Maglev vehicles or trains of a particular design or weight. Good crash worthiness design can provide some protection to vehicle occupants at higher speed, but the energy dissipated in a high-speed collision is very large and it is not feasible to provide occupant protection using the vehicle structure. Safety at high speed depends

primarily on the performance of the operations control system utilizing collision avoidance systems and procedures (ATP, ATS & ATO), instead of collision survivability.

Two "specified collisions" are identified for Maglev HSST 100S vehicle, and vehicle structure is designed to accommodate:

- A very low speed collision 3.1 mph (5 km/h) which the Maglev vehicle will survive without significant structural damage (only cosmetic damage, and will not produce high longitudinal deceleration in the vehicle that could cause standing passenger to fall down, or throw people against hard surfaces.

- Higher speed, 25 mph (40 km/h) collisions in which crushing of the vehicle body will be confined to unoccupied areas (no crushing in occupied compartments), that minimize the risk of severe injuries inside the passenger or crew compartments due to people and loose objects such as baggage being thrown about the car. Actual simulation was performed employing 74,954 lbs (34 metric tons) of compression load for the HSST 100S vehicles.

6. Glazing Requirements

The Maglev system is usually exposed to the same or similar hazards with regard to impacts on forward-facing windows as other transportation vehicles operating on or near the ground, including bird impact, gunfire and other flying objects.

Flying objects could include those that have a source external to the Maglev system (such as objects picked by a strong wind), objects that have been thrown at the guideway by vandals, or objects that have been detached from the vehicle or guideway, or another vehicle traveling on an adjacent guideway.

The gunfire hazard is of greater concern in the United States than elsewhere, but the other hazards are similar in all countries. The frequency of occurrence of potentially hazardous impacts is a function of the guideway configuration and the nature of the guideway's immediate surroundings including:

- Height of guideway above surrounding land, where elevated guideway is used.

- Presence of structures or trees of a height greater than the guideway within a close distance (100 m or 328 ft).
- Presence of passes accessible to the public. Passes might be avoided in high-speed areas, but is more difficult to avoid it in low-speed areas near terminals.
- Presence of an adjacent guideway, which creates a potential hazard from objects detached from or thrown up by a vehicle traveling in the opposite direction.

Elevated guideway with dedicated right-of-way provides good protection against intrusions, however full protection against hazards cannot be guaranteed. Therefore, some impact requirements are essential for both forward-facing and side-facing windows.

The ASCE Automated People Mover (APM) Standard Part II requires that all glazing meet Automotive Safety Glazing ANSI/SAE J673-APR93 (Edge Treatment) and Safety Glazing Materials for Glazing Motor Vehicles and Motor Equipment Operating on Land Highways – Safety Standard, ANSI/SAE Z26.1 – 1996. All Windows shall meet Item 3 tests for glass and glass laminates, or Item 4 tests for rigid plastics

The FRA requirement in 49 CFR Parts 238.221, Glazing, and Part 223, Safety Glazing Standards-Locomotives, Passenger Cars and Cabooses, specify requirements for glazing materials including impact testing. These include impacts of cinder block and riffle bullets for front facing windows ("FRA Type I" tests) and side-facing windows ("FRA Type II" tests) for glazing material intended for FRA-regulated rolling stock.

The Japan Industry Standard JIS Code R 3205, requires shot-bag impact test on the window similar to FRA requirements for front facing windows, but is not as severe as the riffle bullets and cinder block impact test requirements for front and side windows in FRA-regulated locomotives, passenger cars and cabooses.

HSST-100S Vehicle: The probability of gunfire in and about the elevated guideway of a slow-speed urban maglev in an exclusive, dedicated right-of- way rapid transit environment is low. Nevertheless, some kind of impact protection for forward facing/cab windows is required. The FRA impact requirement is not suitable for the low-speed Maglev system, due to excessive glass weight and due to extremely small potential hazard from objects thrown on the guideway, either from surrounding structure or vehicles traveling in the opposite direction. Small debris or bird striking scenario has the best probability to occur during the service. The existing safety glass supplied by the HSST with impact resistance defined in JIS R 3205 is quite suitable for slow-speed operation in Japan. In the event that higher operating speeds will be implemented in a US application of the HSST 100L vehicle, a re-evaluation of the use of FRA type I glazing materials and its weight implications will be considered and evaluated, as will other structural parameters for higher speed. The existing forward-facing windows are made of a heat absorbing safety glass, and the crew and passenger compartment windows, including the windows in each passenger door, are tempered safety glass.

Side window impact requirement does not appear to be applicable for low-speed Maglev vehicle due to negligible hazard from foreign objects.

The JIS R 3205 standard is quite suitable for a proposed US slow-speed service and meets or exceeds the requirements of Automotive Safety Glazing, SAE J673 (Edge Treatment) and Safety Glazing Materials for Glazing Motor vehicles Operating on Land Highways- Safety Code, ANSI Z26. 1, incorporated in ASCE standard for Automated People Movers, Part II.

The FRA requirement for emergency window exits is not applicable for vehicle operating on elevated guideways, and is not required per ASCE Standard for Automated People Movers, Part II. Emergency exiting via car windows is currently not used in urban rail rapid transit systems as a planned emergency evacuation route.

7. Coupler Requirements

The FRA requirements for couplers apply to the standard railroad swinging-knuckle design, but also address certain concerns that could be common for all couplers.

HSST-100S Vehicle: The US requirement for HSST 100 vehicle that couplers be free from defects and that the couplers be securely mounted will be satisfied. Couplers will be semi-automatic mechanical type, slack free and designed to allow coupling and uncoupling of trains anywhere in the system, including facilities or storage yards. A positive lock will assure that the coupler once engaged, cannot release without prior release of this lock. The draw bar will be provided between non-cab ends, and the draw bar pins will be of such design that prevents pin

from falling out of place in case of breakage. The mechanical coupler is not used as an electrical ground. Since Maglev couplers are not of the swing-knuckle type design, the specific elements of the coupler that are specified by the FRA are different. The FRA requirement for energy absorption are far too severe for the slow-speed Maglev operation, compared to railroad environment and may be omitted, because it is not expected for Maglev vehicles to undergo the degree of impacts seen in couplings and operations of a railroad conventional vehicles. The existing HSST 100- provided couplers will satisfy ASCE standard for Automated People Movers, Part II.

Electrical connections between coupled vehicles will include circuit and shield grounds as appropriate. High voltage circuits will not be train-lined between vehicles that may be coupled or uncoupled.

Hydraulic and pneumatic train lines between vehicles will have valves to shut off the lines when not coupled to another vehicle. If more than one hydraulic or pneumatic train line is required, they will be configured so that misconnection is not possible.

8. Pilots and Snowplow Requirements

HSST-100S Vehicle: The FRA requirement that locomotives be equipped with pilots, snowplows, or end plates is not appropriate for Maglev vehicles, because those devices produce adverse aerodynamic effects, they are too heavy, and the hazard of intrusion on the exclusive, dedicated right-of-way is low for an elevated system. However, the HSST vehicle is equipped with a deflector plate (cow catcher) to prevent small objects passing under the vehicle and hitting vehicle equipment such as braking, suspension, propulsion, etc.

Snowplow is not required since both German experience with Trans rapid system and the CHSST experience with the HSST 100 vehicles running in snow yield that the snow accumulation is not an issue.

APPENDIX D

EMERGENCY EVACUATION FROM A THREE-CAR TRAIN OF CHSST 100L VEHICLE

The following comparative quantitative evaluation leads to the conclusion that in a US application of the CHSST 100L vehicles using the existing guideway design with sleeper/ rail assemblies, which do not provide walking surface for the evacuees on the guideway, the preferred solution is to provide an elevated walkway, in order to comply with timely exiting requirements under emergency evacuation per NFPA 130 for the 100L vehicle with its current 15-minutes fire-rated floor.

1. Survey of various Exit Capacity Rates Per NFPA 130, 2000 Edition.

Type of Exit	Exit Capacity in Persons per Inch per Minute (pim) [Ref. NFPA 130]
Exit doors and gates- minimum width of 36 in. (914.4 mm).	2.27
Exit corridors and ramps of 4 Percent Slope or Less.	2.27
Exit Stairs, Stopped Escalators, and Ramps of Over 4 Percent Slope - Up Direction.	1.59
Exit Stairs, Stopped Escalators, and Ramps of Over 4 Percent Slope - Down Direction.	1.82

Fare Collection Gates	Exit Capacity Flow in Persons per Minute (ppm) [Ref. NFPA 130]	Calculated Exit Capacity in Persons Per Inch Per Minute (pim)
Fare collection gates, when deactivated- minimum 20-in. (508-mm) clear unobstructed aisle. Console does not exceed 40 in. (1016 mm) in height.	50	2.5
A turnstile-type fare collection gate, minimum of 18-in. (457.2-mm) aisle, maximum of 36-in. (914.4-mm) height of the turnstile bar. Turnstile bar l free wheels in the exit direction.	25	1.39

2. Quantitative Evaluation of HSST 100L Emergency Evacuation Times and Their Acceptance in the US (Ref. NFPA 130)

A. Parameters for Emergency Evacuation of 100L 3-Car-Train Via End-Door: Current CHSST Application in Japan.

Occupants of all 3 cars walk through the train and exit through one end-door, down the gangplank to the guideway track level, then down a ladder from the guideway to a lower service walkway at the pier-cap level, and move away from the vehicle on the lower service walkway in one direction. See Figure B-1 for the schematic drawing of the train end-door and gangplank evacuation method. All train occupants walking inside the train towards the end-door pass through a 23.62-inch (60-cm)-wide center aisle between the seats within the train. On the guideway, there is no standing room or walking surface to receive the occupant load of the train, to remain or walk away along the guideway, and each evacuee coming down the gangplank, must immediately proceed to climb down the ladder to the existing lower service walkway at the pier-cap level. The following is a review of the parameters calculated for exiting flow rates and exiting time for emergency evacuation of 100L 3-car-train using one end-door. All parameters are based on adaptation of sample data of exit capacity rates specified in NFPA 130, 2000 edition, shown above.

1. Flow Rate Within the Vehicle Center-Aisle on the Way to End-Door

1a. An appropriate capacity rate through the vehicle interior center aisle, on the way to the end-door, is conservatively selected as 2.0 persons per inch per minute (pim)

1b. An appropriate capacity flow rate in persons per minute (ppm) through a 60-cm (23.62 in)-wide vehicle center-aisle, moving towards the end-door, is calculated as:

2.00 x 23.62 =	47.24	ppm flow rate inside the vehicle through center-aisle on the way to end-door

2. Flow Rate Through the Vehicle End-Door

2a. An appropriate capacity rate through the end-door at one end of the train, stepping towards the gangplank is conservatively selected as 1.90 persons per inch per minute (pim)

2b. An appropriate exit flow rate in persons per minute (ppm) through an 80-cm (31.50 in)-wide vehicle end-door, stepping towards the gangplank, is calculated as:

1.90 x 31.50 =	59.85	ppm flow rate through the vehicle end-door

3. Flow Rate Down the Gangplank

3a. An appropriate exit capacity rate down the gangplank outside the vehicle end-door, towards the guideway track level, is conservatively selected as 1.82 persons per inch per minute (pim)

3b. An appropriate exit flow rate in persons per minute (ppm) down the 47-cm (18.5 in.)-wide gangplank outside the vehicle end-door, towards the guideway track level, is calculated as:

1.82 x 18.50 =	33.67	ppm flow rate down the gangplank

4. Flow Rate Down the Ladder to the Lower Walkway Below Track Level

4a. An appropriate exit flow rate in persons per minute (ppm) climbing down the ladder from the guideway track level to the existing service walkway below track level, considering the complexity of climbing down the ladder, passengers agility, etc., is conservatively selected as 6 persons per minute.

6.00	ppm flow rate down the ladder to the lower walkway below track level

5. Flow Rate Along the 60-cm wide Existing Lower Service Walkway

5a. An appropriate exit capacity rate on the existing service walkway below track level, moving away from the train (one direction only), is conservatively selected as 2.0 persons per inch per minute (pim)

5b. An appropriate flow rate in persons per minute (ppm) on a 60-cm (23.62 in)-wide existing service walkway below track level, moving away from the train (one direction only), is calculated as:

2.00 x 23.62 =	47.24	ppm flow rate along the 60-cm wide existing lower service walkway

6. Flow Rate Along the Evacuation Route to the Lower Service Walkway

The train evacuees exiting the train via end-door down the gangplank do not have space or appropriate walking surface on the guideway track level to remain or congregate on the guideway or move away from the vehicle on the guideway surface. Evacuees must immediately climb down the ladder to the lower service walkway and move away from the train along the lower service walkway. Travel distance of the last person on the train to the lower walkway outside the vehicle is not significant compared to queuing at the circulation elements along the way, and the exiting flow rate along each circulation element significantly dominate the total existing time (travel+ waiting time) for the last person on the train to reach the walkway. Since there is no room or walking surface for the train occupant load to congregate or walk on the guideway, the train exiting flow time has thus been extended to encompass the time for the last person on the train to be on the walkway outside the train, instead of merely "outside the train". The exiting flow time for the train occupant load is calculated considering the capacities described above and their impact along with the occupant load of the train.

The exiting flow time is constrained by individual capacities in series along the evacuation path affecting exiting from the vehicle to the walkway. Care is therefore specifically taken to ensure that the most restrictive element in the chain constraining the exiting flow from the train is used in the calculation. The most restrictive capacity, measured in persons per minute, among all circulation elements in series affecting vehicle exiting capacity flow, is that of the ladder between the guideway and the service walkway (6 ppm). Therefore, it is used as the restrictive exiting capacity flow rate in calculating the train exit flow time. The calculations are conducted for a 3-car train consist of 100L vehicles using the current end-door evacuation scenario under the present TKL design configuration in Nagoya, Japan. An evaluation is also made whether the evacuation times would be acceptable in the US for a maglev vehicle such as 100L with a car floor that is fire-rated in a fire-penetration test for only 15 minutes.

7. Evacuation Time for a 3-Car Train Evacuation Via End-Door

Vehicle Standee Density Assumption	3-Car Train Occupant Load	No. of End-Doors Used on Train	Exit Capacity Using Most Restrictive Capacity for Ladder between Guideway and Walkway [in Persons Per Minute (ppm)]	Exit Time from 3-car Train Using One End-Door (Minutes)	Acceptable in the US?
0.3 m^2/Person	242	1	6.00	40.33	No, when car floor is fire-rated only for 15 minutes (100L.)

0.14 m^2/Person	400	1	6.00	66.67	No, when car floor is fire-rated only for 15 minutes (100L.)

8. Evacuation from a Single End-Car (e.g., Car Mc1 or MC2) Via End-Door

Vehicle Standee Density Assumption	Single Car Occupant Load	No. of End-Doors Used on Car	Exit Capacity Using Most Restrictive Capacity for Ladder between Guideway and Walkway [in Persons Per Minute (ppm)]	Exit Time from Vehicle Using One End-Door/ Passageway (Minutes)	Acceptable in the US?
0.3 m^2/Person	81	1	6.00	13.50	Marginally, when car floor is fire-rated only for 15 minutes (100L.)
0.14 m^2/Person	133	1	6.00	22.17	No, when car floor is fire-rated only for 15 minutes (100L.)

B. Parameters for Emergency Evacuation of 100L 3-Car-Train Via Side-Doors: Future Application in the US

Occupants of all 3 cars exit from each vehicle through the vehicle two side-doors, onto an elevated (benchwall) walkway at the vehicle floor level, and move away from the train on the elevated emergency walkway in one direction only. See Fig. D-2a & D-2b for schematic drawings depicting possible US-style elevated emergency walkway, with two handrail options (1 & 2). The preferred Option 2 is the elevated walkway with a handrail in its center. This configuration provides two 23-inch (58.5 cm)- wide elevated walkway lanes side-by-side sharing the handrail. On the train, most evacuees exiting through side -doors are not constrained by the 60-cm-wide main center aisle within the respective train cars. The following is a review of the parameters derived for exiting capacity and exiting time for emergency evacuation of CHSST 100L 3-car-train, using the two side-doors of each vehicle to an elevated walkway. All parameters are based on adaptation of sample data of exiting capacity specified in NFPA 130, 2000 edition, shown earlier.

1. Flow Rate from the Vehicle Side-Doors to a Future, US-Style Elevated Walkway

1a. An appropriate exit capacity rate through the vehicle side-door, stepping towards a future elevated emergency walkway (US- style benchwall at the vehicle floor level), is conservatively selected as 2.00 persons per inch per minute (pim)

1b. An appropriate exit flow rate in persons per minute (ppm) through an 80-cm (31.50 in)-wide vehicle side-door, stepping towards a future elevated emergency walkway, is calculated as:

2.00 x 31.50 = 63.00 ppm flow rate from the vehicle side-doors to a future, US- style elevated walkway

2. Flow Rate Along a 23-Inch-Wide Future, US-Style Elevated Walkway

2a. An appropriate exit capacity rate on the elevated emergency walkway along the train, moving past the end of the train (away from the train, in one direction only) is conservatively selected as 2.0 Persons Per Inch Per Minute (pim)

2b. An appropriate flow rate in persons per minute (ppm) on a 23-inch (58.5 cm)-wide elevated emergency walkway along the train, past the end of the train (one direction only) is calculated as:

2.00 x 23.00 = 46.00 ppm flow rate along a 23-inch-wide future, US-style elevated walkway

3. Flow Rate Along the Evacuation Route using a US-Style Elevated Walkway

The train evacuees exiting the train via side-doors to an elevated emergency walkway, have a relatively narrow 23 inch single-lane walking surface (to minimize guideway cost) that will accommodate the train occupant load with restricted capacity compared to the two 80-cm side-doors per vehicle on a 3-car train. However, it will allow train evacuees to move away from the train along the elevated emergency walkway. Travel distance to move along the walkway away from the train is not significant, but queuing on the walkway and inside the vehicle side-doors, and the exiting flow along each dominate the total travel+ waiting time for the last person on the train to reach the walkway. The train exiting flow time is thus the time for the last person on the train to be on the walkway outside the train, instead of merely "outside the train". It is calculated considering the capacities described above and their impact along with the occupant load of the train.

The exiting flow time is constrained by the narrow walkway capacity in series with all the train side-doors along the evacuation path affecting exiting from the vehicle to the walkway. Care is therefore specifically taken to ensure that the most restrictive element in the chain constraining the exiting flow from the train side-doors is used in the calculation. The most restrictive capacity, measured in persons per minute, among the two circulation elements in series affecting vehicle exiting capacity flow, is that of the 60-cm narrow walkway (47 ppm). Therefore, it is used as the restrictive exiting capacity in calculating the train exit flow time. The calculations are conducted for a 3-car train consist of 100L vehicles using the anticipated side-door evacuation scenario under the future US-application of the CHSST system. An evaluation is made whether the evacuation times would be acceptable in the US for a maglev vehicle such as 100L where the car floor is fire-rated only for 15 minutes.

B.1. 3-Car Train Evacuation Via Side-Doors

Vehicle Standee Density Assumption	3-Car Train Occupant Load	No. of Side-Doors Used on Train	Exit Capacity Using Most Restrictive Capacity for 23-inch Narrow Walkway [in Persons Per Minute (ppm)]	Exit Time from Train Using 6 Side-Doors and a Narrow Walkway limiting capacity (Minutes)	Acceptable in the US?
0.3 m^2/Person	242	6	46.00	5.26	Yes, when car floor is fire-rated only for 15 minutes (100L.)
0.14 m^2/Person	400	6	46.00	8.70	Yes, when car floor is fire-rated only for 15 minutes (100L.)

B.2. Single Car Evacuation Via Side Doors

Vehicle Standee Density Assumption	Single Car Occupant Load	No. of Side-Doors Used on Car	Exit Capacity Using Most Restrictive Capacity for 23-Inches Narrow Walkway [in Persons Per Minute (ppm)]	Exit Time from Vehicle Using 2 Side-Doors and a Narrow Walkway Limiting Capacity (Minutes)	Acceptable in the US?
0.3 m^2/Person	81	2	46.00	1.76	Yes, when car floor is fire-rated only for 15 minutes (100L.)
0.14 m^2/Person	133	2	46.00	2.89	Yes, when car floor is fire-rated only for 15 minutes (100L.)

Conclusion: in a US application of the CHSST 100L vehicles using the existing guideway design with sleeper/ rail assemblies, which do not provide walking surface for the evacuees on the guideway, the preferred solution is to provide an elevated walkway, in order to comply with timely exiting requirements under emergency evacuation per NFPA 130 for the 100L vehicle with its current 15-minutes fire-rated floor.

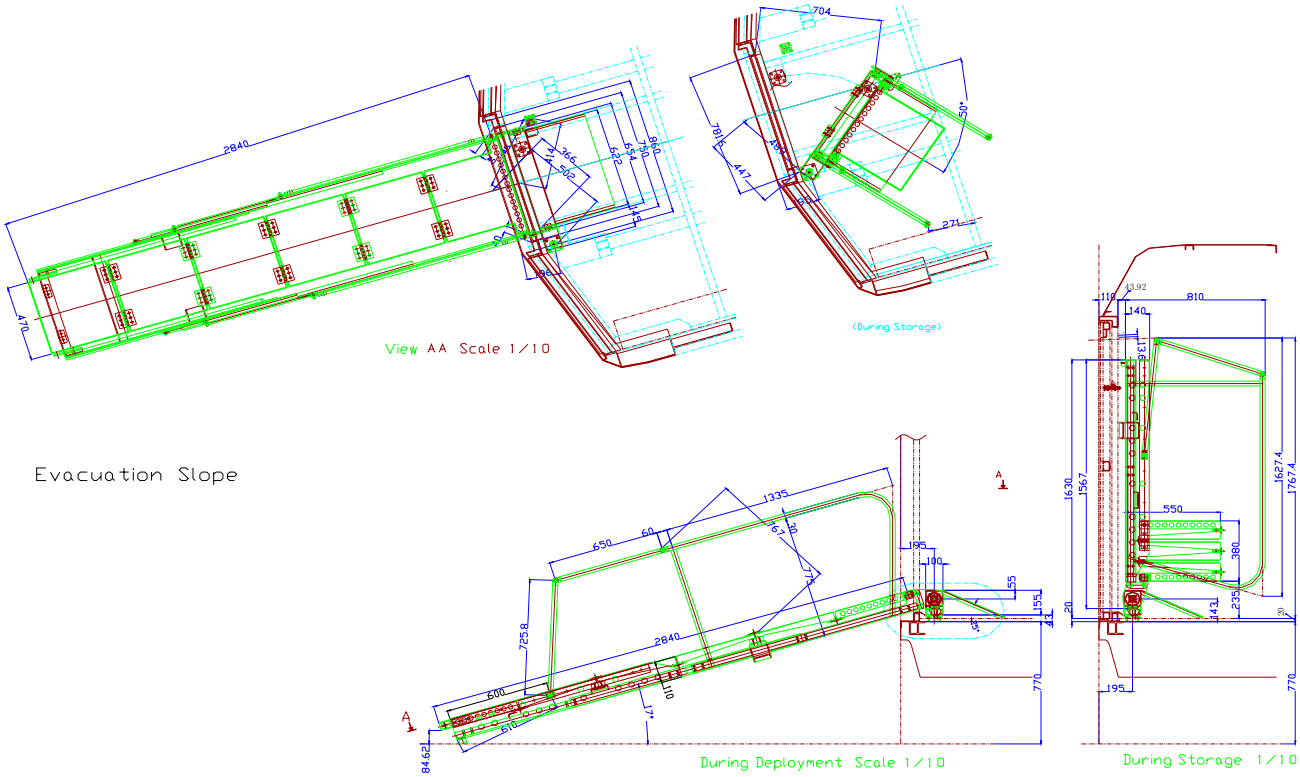

Figure D-1 Evacuation Slope

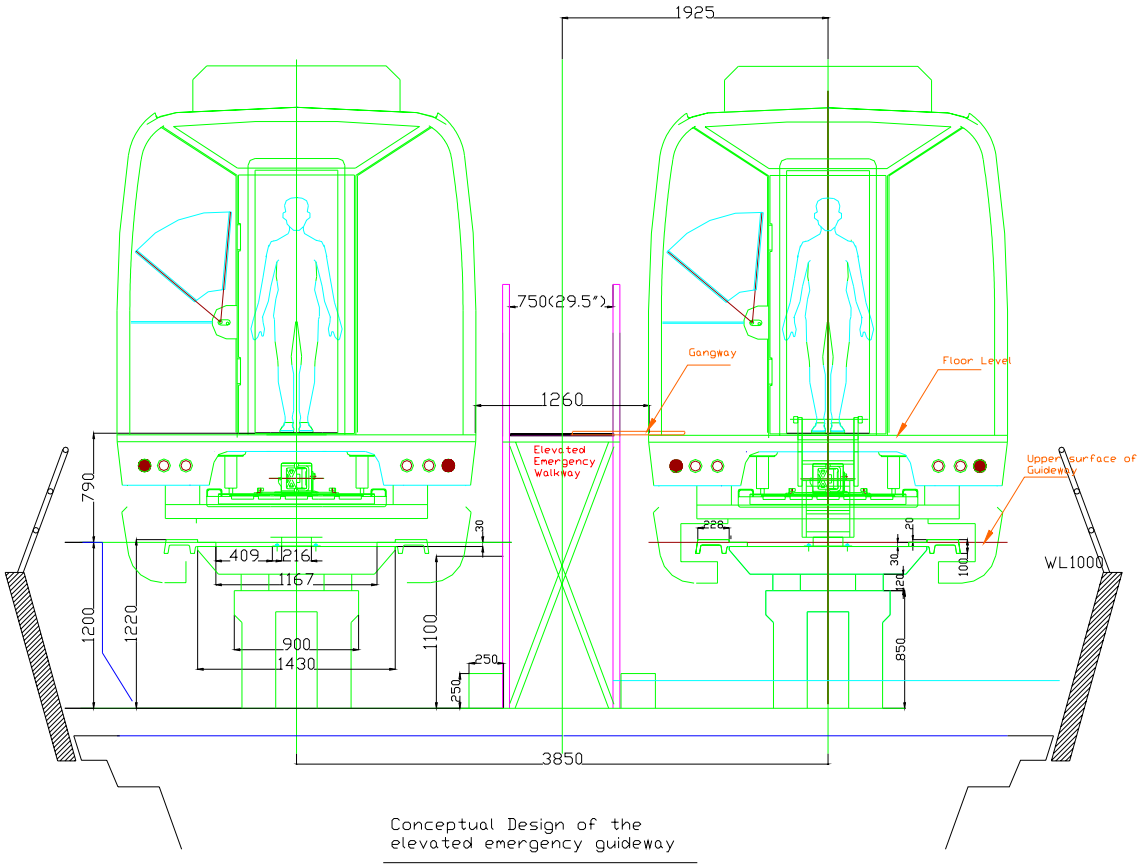

Figure D-2a Emergency Walkway Handrail Option 1

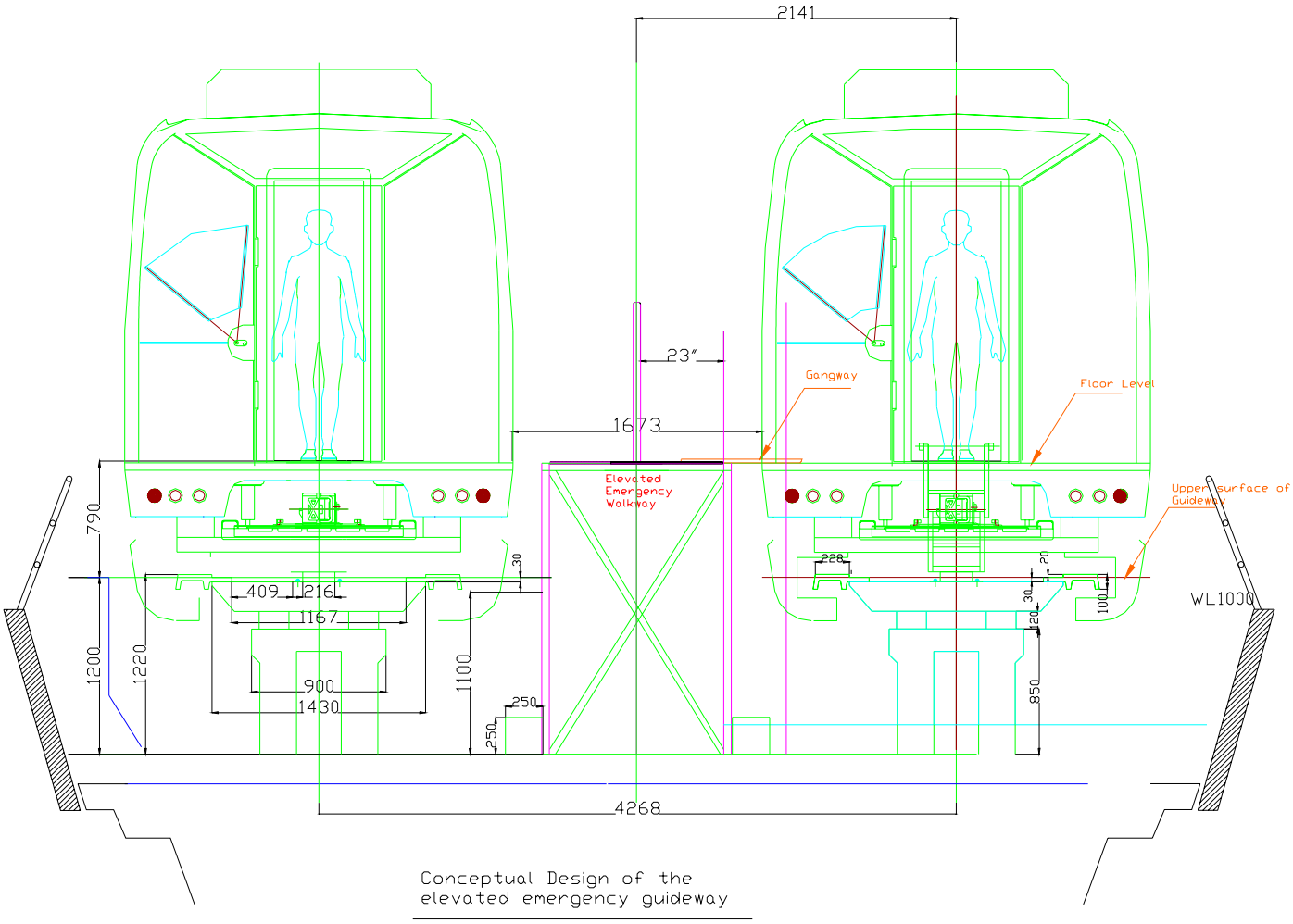

Figure D-2b Emergency Walkway Handrail Option 2

Appendix E

Letter from Montgomery County

DEPARTMENT OF PUBLIC WORKS
AND TRANSPORTATION

Douglas M. Duncan
County Executive

Albert J. Genetti, Jr., P.E.
Director

February 6, 2002

Mr. Bob Evans, P.E.
Earthtech
7 St. Paul Street, Suite 900
Baltimore, Maryland 21202

Dear Mr. Evans:

Thank you very much for the briefing on your company's involvement in the FTA program to introduce low speed Mag Lev technology into the American market. In response to your briefing and follow-up correspondence, I am delighted in informing you that the Department of Public Works and Transportation would be willing to be identified by your group as a potential end-user of this technology.

It is our understanding that this expression of interest on our part does not commit us to a formal partnership at this stage. We will be glad to participate in your efforts as an interested advisor, by commenting and providing input as your team develops specific proposals.

As we discussed the different corridors with potential applications for this technology, we believe the less complicated one would be the connection from WMATA's Metro Rail station at Grosvenor to the Rock Springs Technical Park, in the area surrounded by the I-270 spurs and I-495.

I will continue to be your point of contact on this important study. Please keep us informed of major milestones in the study. We look forward to a successful and mutually beneficial relationship.

Sincerely,

Edgar Gonzalez, P.E.
Deputy Director for Transportation Policy

cc. John Zimmer
John Agro

Office of the Director
101 Monroe Street, 10th Floor • Rockville, Maryland 20850-2540 • 240/777-7170, FAX 240/777-7178
Located one block west of the Rockville Metro Station

Appendix F

The following is the chronology of the certification process by the Japanese Ministry of Transport (MOT) for the HSST vehicle in order to ascertain approval of the vehicle for commercial operation in Japan. In a separate document, Chubu HSST: Safety Guideline and Related Materials, is more detailed information de developed during the certification process.

FY1980-FY1981

- Japanese Ministry of Transport (MOT) issues the R&D guideline for the EMS system driven by LIM as a result of 2 years survey led by the Advanced Transit Technology Division in the Transit Technology Council.

FY1983-FY1984

- MOT funds the development of HSST module system (HSST core technology).
- The HSST-03 incorporated with the modules is placed on demonstration at the Tsukuba Science Expo in 1985 as well as at the Vancouver Transport Expo in 1986.

FY1987-FY1988

- After the HSST-03 excellent operation in the Tsukuba Science Expo in 1985 and the Vancouver Transport Expo in 1986, MOT performs a number of hearings on the HSST technology for establishing Maglev law.

Note: Japanese system to approve a new railway technology is not such as to certify the technology itself as called "type certification".
MOT is required to certify the design of the system as well as to provide a railway business license to an applicant based on the railway law commercially and technically when a railway operator submits an application to MOT. Therefore it is necessary for MOT to enact a law for the new technology in prior to receiving any deployment application using the technology.

- Based on an enormous technical data given by the HSST and a number of discussions, MOT amended railroad laws for Maglev and enacted Maglev regulations in April 1988.
- MOT gives HSST with a railway license just for the EXPO1989 application in Yokohama as the special applicability.
-

FY1989-FY1993

- To accept any HSST application, a further evaluation program is conducted by using full size vehicles and 1.5km long test track in Nagoya from 1989 to 1993.
- Aichi prefecture takes a leadership of the evaluation program because an actual line is planned in an area of east Nagoya, Aichi prefecture.
  Note: Report on Economic Feasibility Study of Magnetic Levitation Linear Motor Car for Urban Transportation

- As the result of preceding evaluation tests performed on CHSST test track, MOT made an announcement in 1993 that the HSST technology has no technical problem for a commercial operation.

- MOT also continues a study for revising of the Maglev regulations.

- The Maglev regulations are revised in 1995 based on the results of the study. MOT has become ready to receive a HSST application.

<u>FY2001-FY2002</u>

➢ 2001 October	Railway Business License of the Tobu Kyuryo Line (TKL) by MLIT
➢ 2002 March	Approval for the TKL construction by MLIT
➢ 2002 April	Approval for the TKL vehicle design by MLIT

Note: MLIT: Ministry of Land, Infrastructure and Transport
(ex-MOT)