APPENDIX C3

MCKENZIE RIVER BRIDGE CROSS SECTIONS

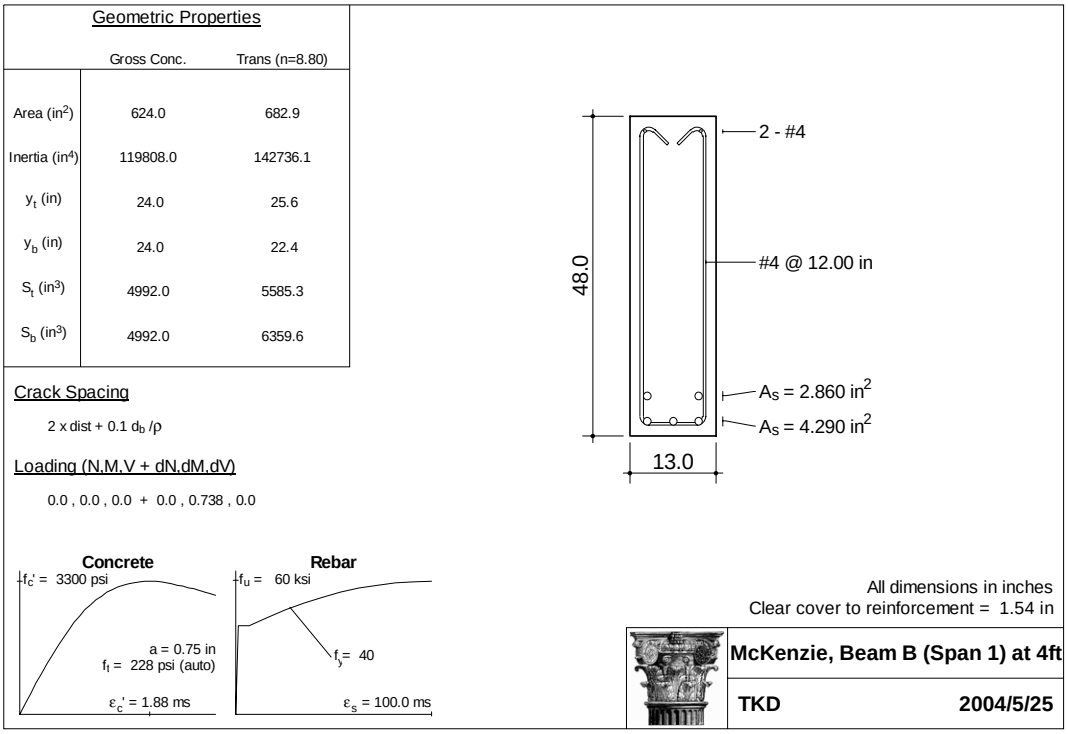

Figure C3.1: McKenzie R. Bridge; Span 1 at 4 ft. (*RESPONSE 2000*™)

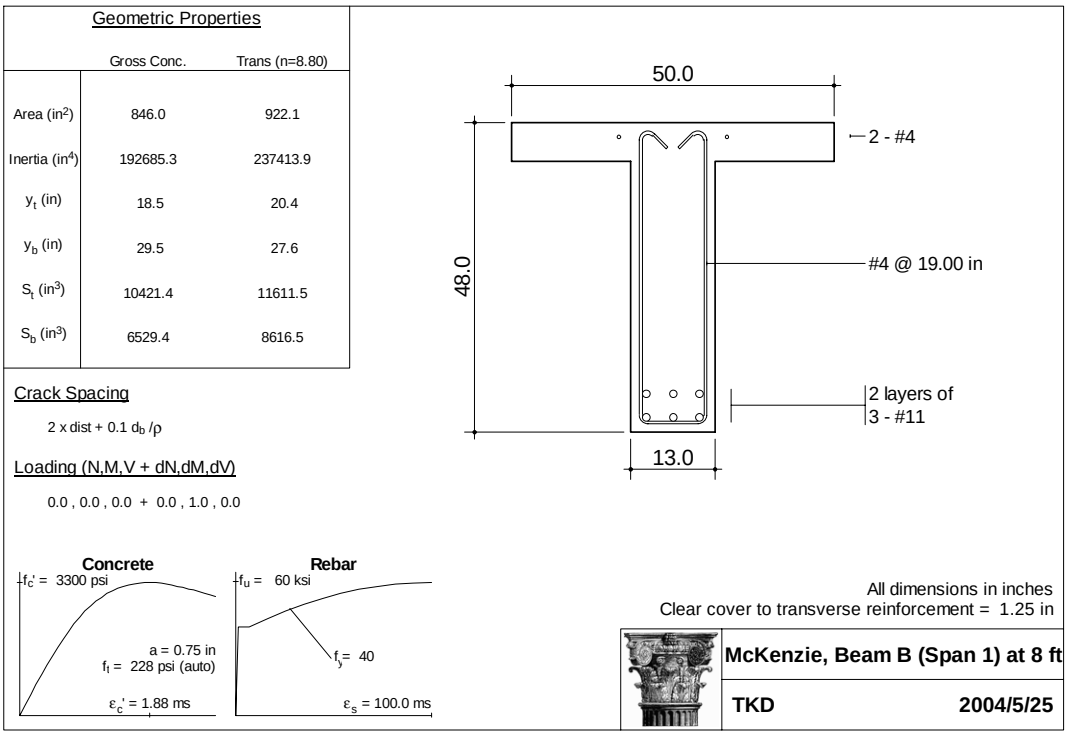

Figure C3.2: McKenzie R. Bridge; Span 1 at 8 ft. (*RESPONSE 2000*™)

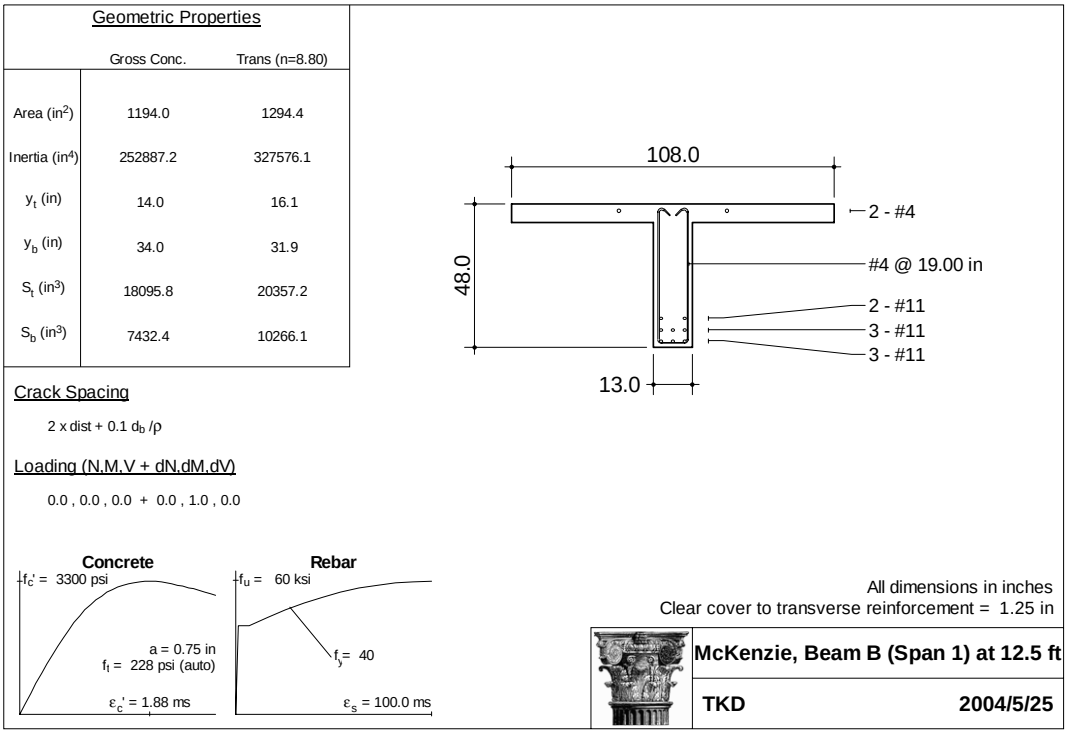

Figure C3.3: McKenzie R. Bridge; Span 1 at 12.5 ft. (*RESPONSE 2000*™)

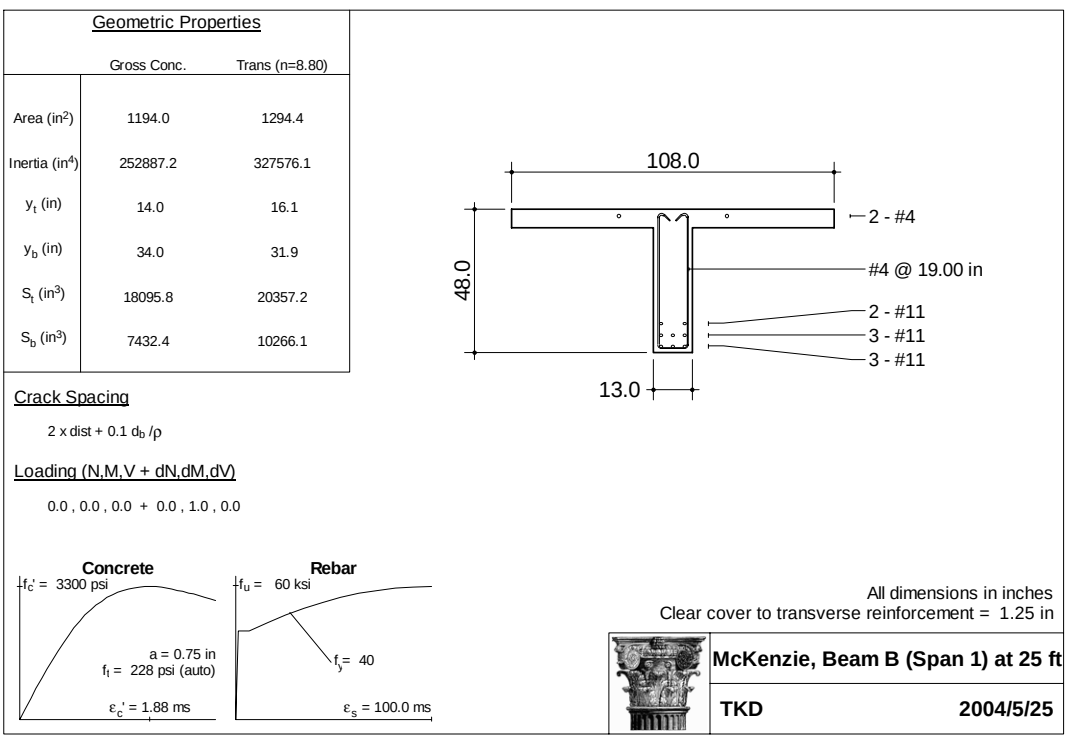

Figure C3.4: McKenzie R. Bridge; Span 1 at 25 ft. (*RESPONSE 2000*™)

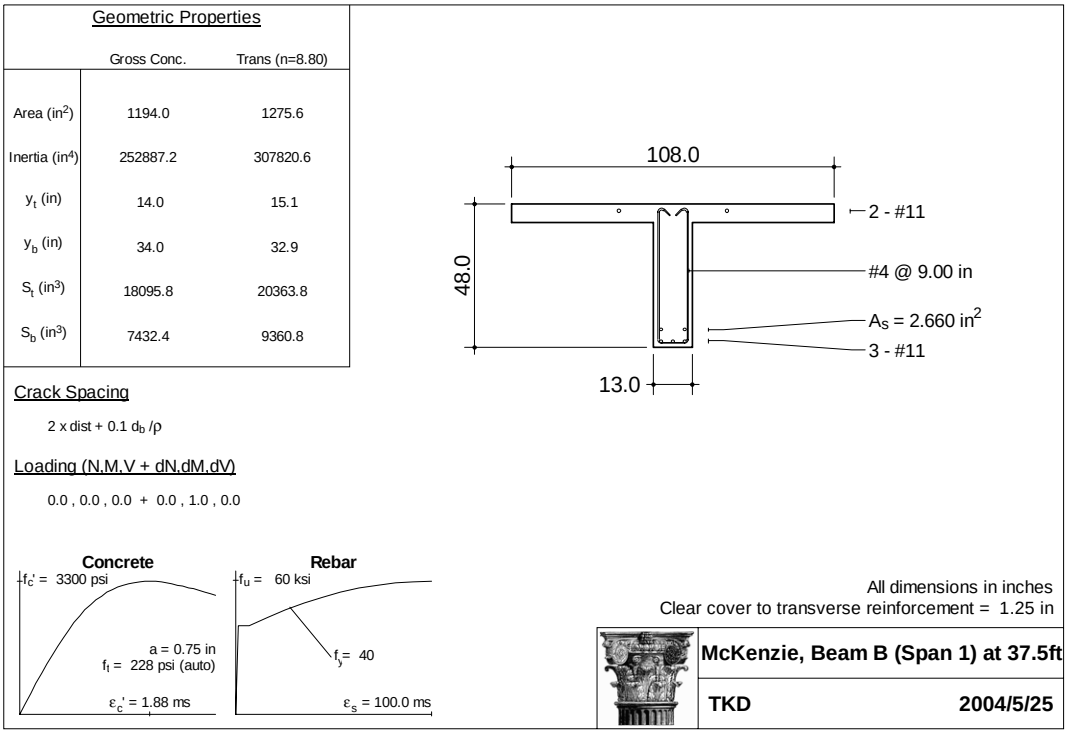

Figure C3.5: McKenzie R. Bridge; Span 1 at 37.5 ft. (*RESPONSE 2000*™)

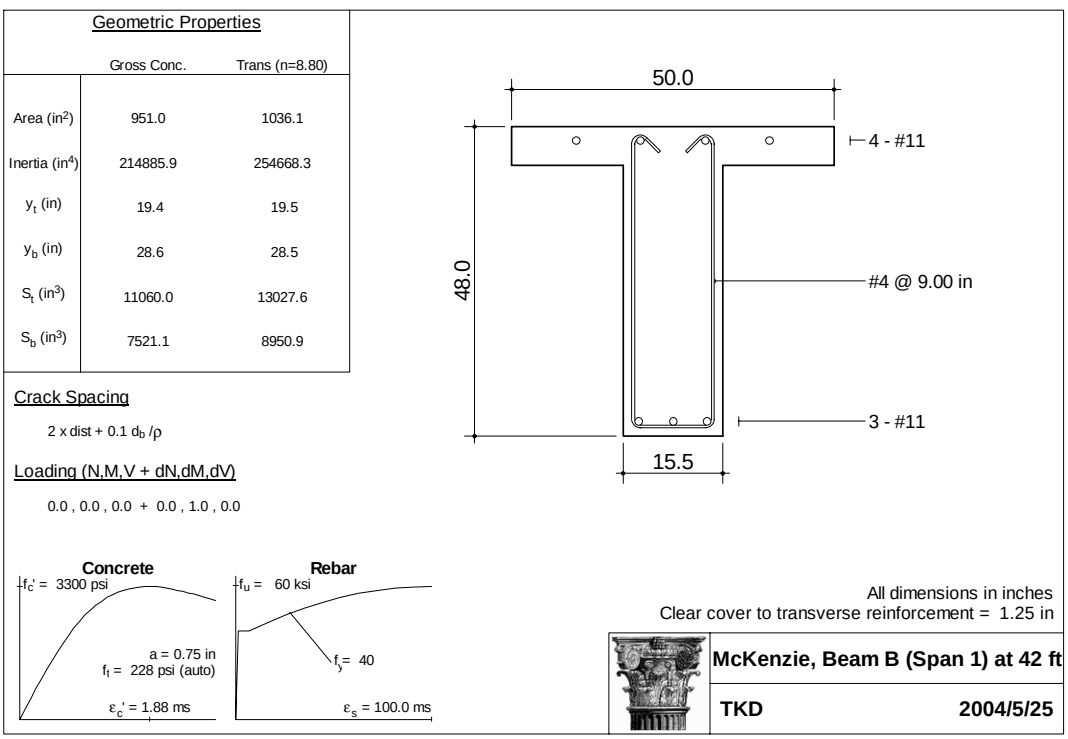

Figure C3.6: McKenzie R. Bridge; Span 1 at 42 ft. (*RESPONSE 2000*™)

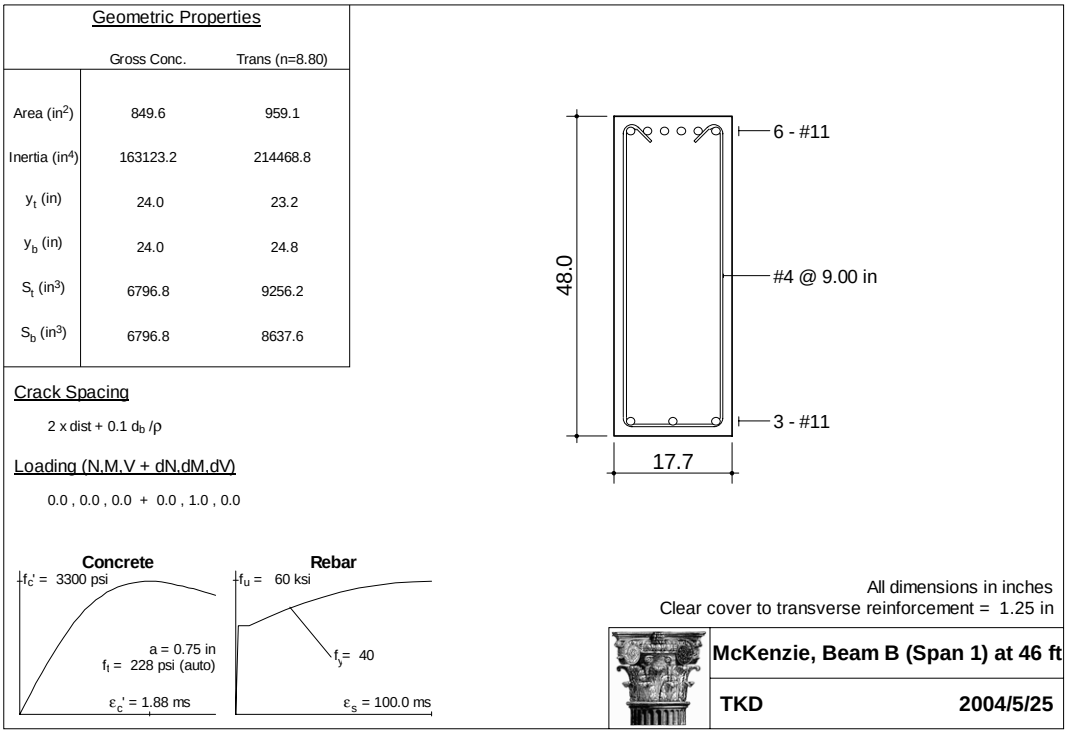

Figure C3.7: McKenzie R. Bridge; Span 1 at 46 ft. (*RESPONSE 2000*™)

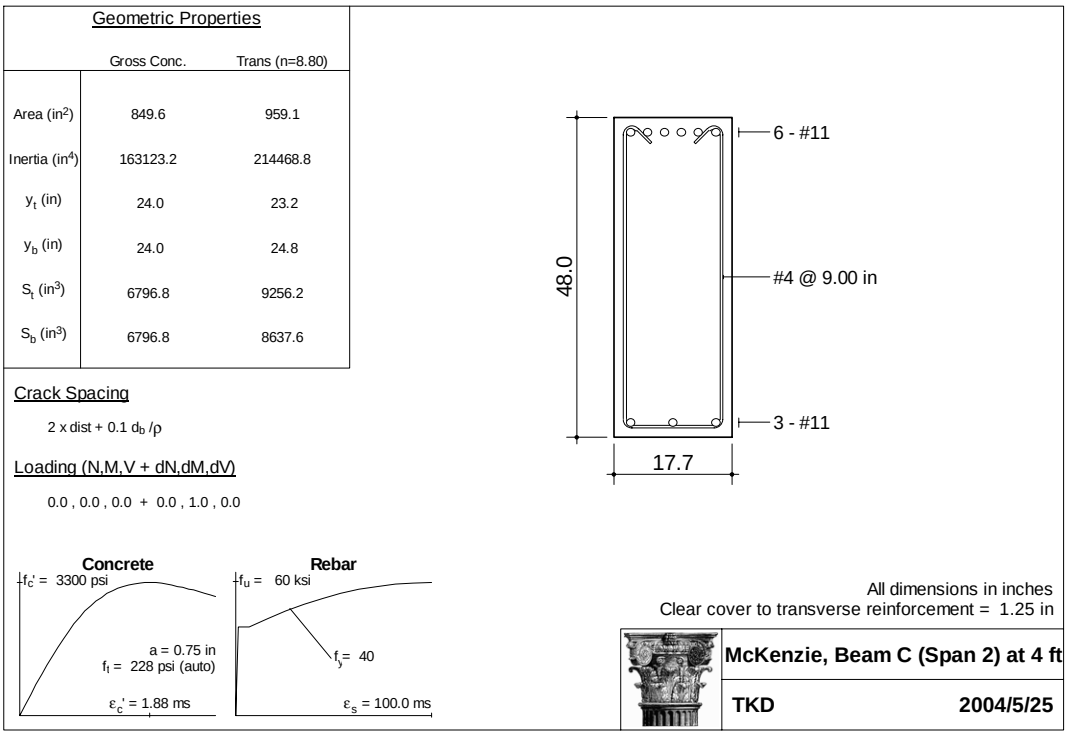

Figure C3.8: McKenzie R. Bridge; Span 2 at 4 ft. (*RESPONSE 2000*™)

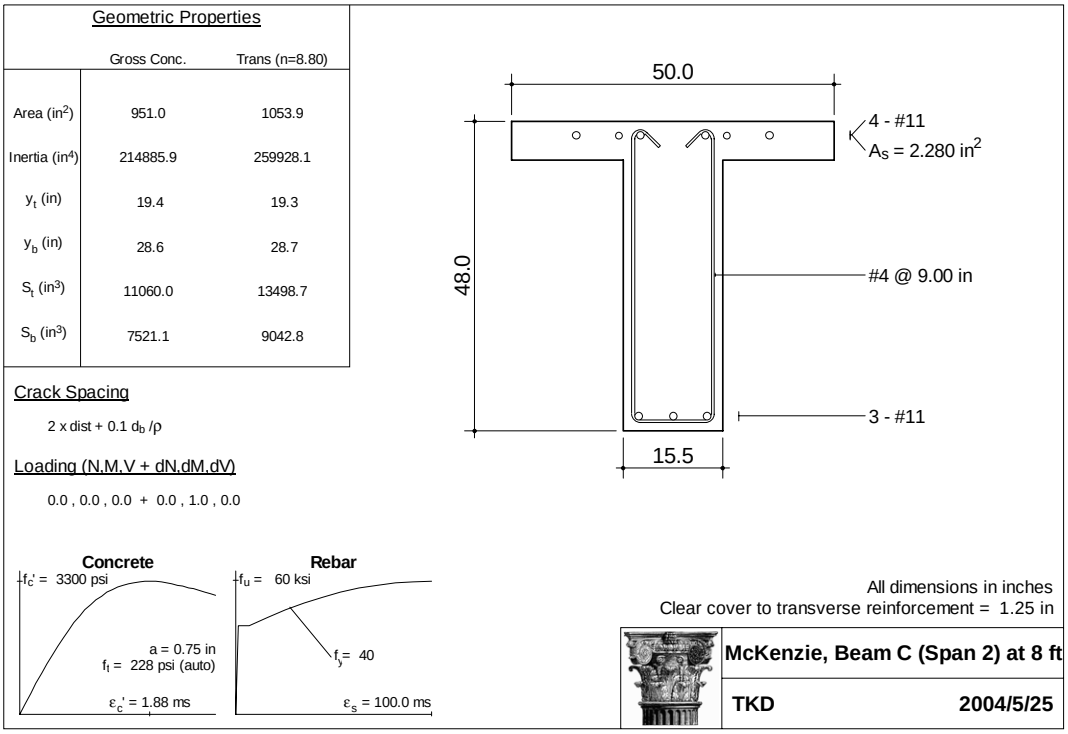

Figure C3.9: McKenzie R. Bridge; Span 2 at 8 ft. (*RESPONSE 2000*™)

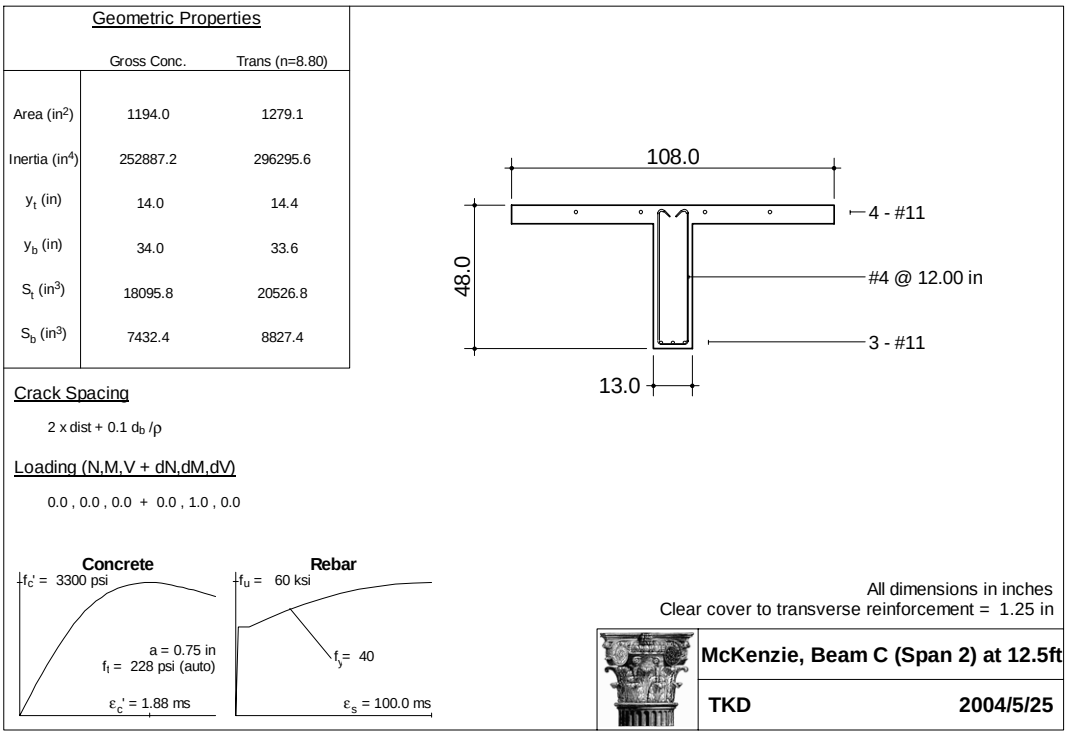

Figure C3.10: McKenzie R. Bridge; Span 2 at 12.5 ft. (*RESPONSE 2000*™)

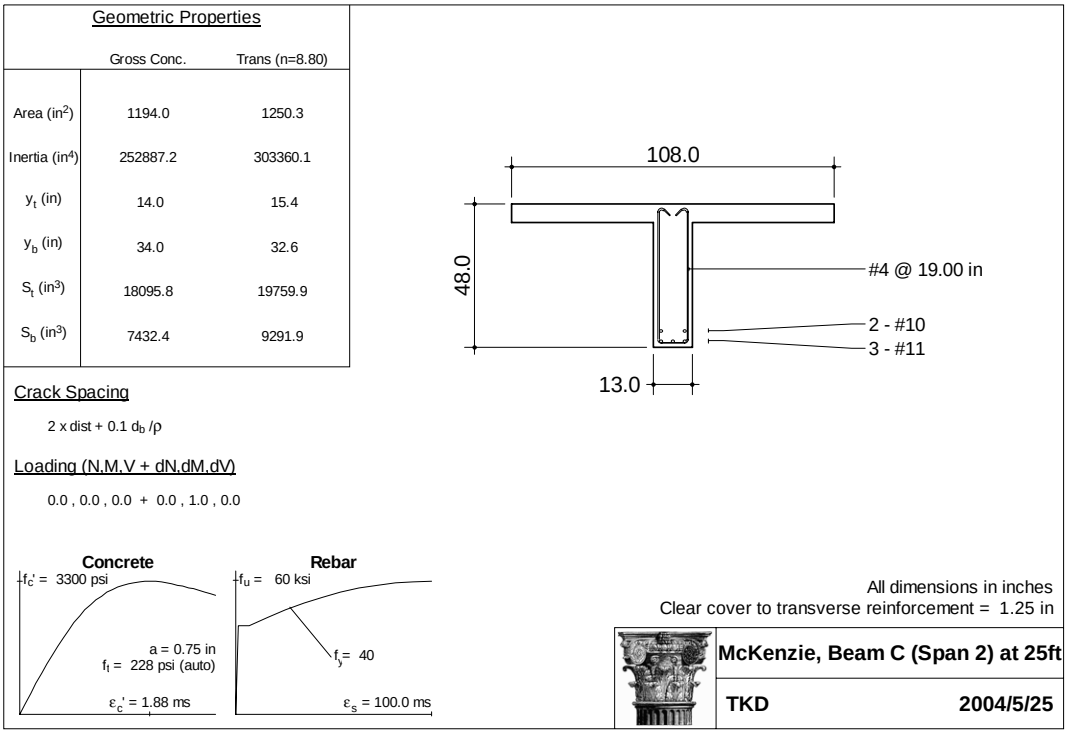

Figure C3.11: McKenzie R. Bridge; Span 2 at 25 ft. (*RESPONSE 2000*™)

The bridge is symmetrical about this point.