TTI: 9-4973

Collision Loads on Bridge Piers: Phase 2. Report of Guidelines for Designing Bridge Piers and Abutments for Vehicle Collisions

Research/Test Report 9-4973-2

Cooperative Research Program

TEXAS TRANSPORTATION INSTITUTE
THE TEXAS A&M UNIVERSITY SYSTEM
COLLEGE STATION, TEXAS

TEXAS DEPARTMENT OF TRANSPORTATION

in cooperation with the
Federal Highway Administration and the
Texas Department of Transportation
http://tti.tamu.edu/documents/9-4973-2.pdf

Technical Report Documentation Page

1. Report No.	2. Government Accession No.	3. Recipient's Catalog No.
FHWA/TX-11/9-4973-2		

4. Title and Subtitle	5. Report Date
COLLISION LOADS ON BRIDGE PIERS: PHASE 2. REPORT OF GUIDELINES FOR DESIGNING BRIDGE PIERS AND ABUTMENTS FOR VEHICLE COLLISIONS	August 2010 Resubmitted: December 2010 Published: March 2011
	6. Performing Organization Code
7. Author(s) C. Eugene Buth, Michael S. Brackin, William F. Williams, and Gary T. Fry	8. Performing Organization Report No. Report 9-4973-2
9. Performing Organization Name and Address Texas Transportation Institute Proving Ground The Texas A&M University System College Station, Texas 77843-3135	10. Work Unit No. (TRAIS) 11. Contract or Grant No. Project 9-4973
12. Sponsoring Agency Name and Address Texas Department of Transportation Research and Technology Implementation Office P.O. Box 5080 Austin, Texas 78763-5080	13. Type of Report and Period Covered Technical/Test Report: March 2007–August 2010 14. Sponsoring Agency Code

15. Supplementary Notes

Project performed in cooperation with the Texas Department of Transportation and the Federal Highway Administration.

Project Title: Guidelines for Designing Bridge Piers and Abutments for Vehicle Collision

URL: http://tti.tamu.edu/documents/9-4973-2.pdf

16. Abstract

An instrumented, simulated bridge pier was constructed, and two full-scale collisions with an 80,000-lb van-type tractor-trailer were performed on it. The trailer was ballasted with bags of sand on pallets. The simulated pier was 36 inches in diameter and was supported in the longitudinal direction by two load cells. Force-versus-time data were obtained from the load cells.

Recommendations for possible revisions to the *AASHTO LRFD Bridge Design Specifications* are given.

17. Key Words	18. Distribution Statement
Bridge Piers, Abutments, Vehicle Collisions, Load Resistance Factor Design, LRFD, Heavy Trucks, Single-Unit Trucks, Bridge Design	No restrictions. This document is available to the public through NTIS: National Technical Information Service Springfield, Virginia 22161 http://www.ntis.gov

19. Security Classif.(of this report)	20. Security Classif.(of this page)	21. No. of Pages	22. Price
Unclassified	Unclassified	100	

Form DOT F 1700.7 (8-72) **Reproduction of completed page authorized**

COLLISION LOADS ON BRIDGE PIERS: PHASE 2. REPORT OF GUIDELINES FOR DESIGNING BRIDGE PIERS AND ABUTMENTS FOR VEHICLE COLLISIONS

by

C. Eugene Buth, P.E.
Senior Research Fellow
Texas Transportation Institute

Michael S. Brackin
Associate Transportation Researcher
Texas Transportation Institute

William F. Williams, P.E.
Assistant Research Engineer
Texas Transportation Institute

and

Gary T. Fry, P.E.
Associate Research Engineer
Texas Transportation Institute

Report 9-4973-2
Project 9-4973
Project Title: Guidelines for Designing Bridge Piers
and Abutments for Vehicle Collision

Performed in cooperation with the
Texas Department of Transportation
and the
Federal Highway Administration

August 2010
Resubmitted: December 2010
Published: March 2011

TEXAS TRANSPORTATION INSTITUTE
The Texas A&M University System
College Station, Texas 77843-3135

DISCLAIMER

This research was performed in cooperation with the Texas Department of Transportation (TxDOT) and the Federal Highway Administration (FHWA). The contents of this report reflect the views of the authors, who are responsible for the facts and the accuracy of the data presented herein. The contents do not necessarily reflect the official view or policies of the FHWA or TxDOT. This report does not constitute a standard, specification, or regulation, and its contents are not intended for construction, bidding, or permit purposes. In addition, the above listed agencies assume no liability for its contents or use thereof. The United States Government and the State of Texas do not endorse products or manufacturers. Trade or manufacturers' names appear herein solely because they are considered essential to the object of this report. The engineer in charge of the project was C. Eugene Buth, P.E. (Texas, #27579).

ACKNOWLEDGMENTS

This research project was conducted under a cooperative program between the Texas Transportation Institute, the Texas Department of Transportation, and the Federal Highway Administration. The lead agency contact and lead agency technical contact for this research were Frank Bailey and Gregg Freeby, respectively. The authors acknowledge and appreciate their guidance and assistance.

Bridge Pier Pooled Fund participating states/partners are:

- California,
- FHWA,
- Florida,
- Kansas,
- New York,
- Pennsylvania,
- Tennessee,
- Texas, and
- Wisconsin.

Current Bridge Pier Pooled Fund working personnel are:

- Gene Buth, Texas Transportation Institute (TTI), g-buth@tamu.edu;
- Nick Nemec, TxDOT, nnemec@dot.state.tx.us;
- James Pohl, TxDOT, jpohl@dot.state.tx.us;
- Gregg Freeby, TxDOT, gfreeby@dot.state.tx.us;
- Wade Odell, TxDOT, wade1@dot.state.tx.us;
- Akram Abu-Odeh, TTI, abu-odeh@tamu.edu;
- Dominique Lord, TTI, d-lord@tamu.edu;
- William Williams, TTI, w-williams@tamu.edu;
- Peter Chang, FHWA, Peter.Chang@dot.gov;
- Hector Garcia, FHWA, Hector.Garcia@fhwa.dot.gov;
- Srinivas Geedipally, TTI, srinivas-g@ttimail.tamu.edu;
- Roger Bligh, TTI, rbligh@tamu.edu;
- Michael Brackin, TTI, m-brackin@ttimail.tamu.edu;
- Susan Hida, California Department of Transportation, American Association of State Highway and Transportation Officials (AASHTO) T-5 chair, susan_hida@dot.ca.gov;
- Loren Risch, Kansas Department of Transportation, Loren@ksdot.org;
- David Kiekbush, Wisconsin Department of Transportation, scot.becker@dot.state.wi.us;
- Art Yannotti, New York State Department of Transportation, ayannotti@dot.state.ny.us;
- Thomas Macioce, Pennsylvania Department of Transportation, tmacioce@state.pa.us;
- Paul Liles, Georgia Department of Transportation, paul.liles@dot.state.ga.us;
- Sean Meddles, Ohio Department of Transportation, Sean.Meddles@dot.state.oh.us;
- Charles Boyd, Florida Department of Transportation, Charles.Boyd@dot.state.fl.us;
- Ed Wasserman, Tennessee Department of Transportation, Ed.Wasserman@state.tn.us;
- Bryan Hodges, TxDOT Tyler District, bhodges@dot.state.tx.us; and
- Alfredo Valles, TxDOT Waco District, avalles@dot.state.tx.us.

TABLE OF CONTENTS

Page

LIST OF FIGURES ix

LIST OF TABLES x

CHAPTER 1. INTRODUCTION 1
- INTRODUCTION 1
- OBJECTIVES/SCOPE OF RESEARCH 1

CHAPTER 2. FULL-SCALE CRASH TEST RESULTS 3
- ANALYSIS OF CRASH TEST RESULTS 3
  - Test Number 2 3
    - Dynamic Analysis of Pier System 10
    - Analysis of Data from the Full-Scale Pier Impact Experiment 13
  - Test Number 1 17

CHAPTER 3. RECOMMENDATIONS 23
- CURRENT AASHTO REQUIREMENTS 23
- DIRECTION OF IMPACT 23
- HEIGHT OF COLLISION FORCE 23
- EFFECT OF TYPE OF BALLAST (CARGO) 24
- MAGNITUDE OF EQUIVALENT STATIC FORCE 24
- TYPE OF BRIDGE STRUCTURE 24
- EFFECT OF COLLISION SPEED 24

CHAPTER 4. SUMMARY AND CONCLUSIONS 25
- SUMMARY 25
- CONCLUSIONS 25

CHAPTER 5. IMPLEMENTATION STATEMENT 27

REFERENCES 29

APPENDIX A. CRASH TEST AND DATA ANALYSIS PROCEDURES 31
- TTI PROVING GROUND DISCLAIMER 31
- TEST FACILITY 31
- TEST ARTICLE 32
- ELECTRONIC INSTRUMENTATION AND DATA PROCESSING 33
- PHOTOGRAPHIC INSTRUMENTATION AND DATA PROCESSING 34
- TEST VEHICLE PROPULSION AND GUIDANCE 34

APPENDIX B. RESULTS FOR TEST NO. 429730-2 35
- TEST VEHICLE 35
- WEATHER CONDITIONS 35
- TEST DESCRIPTION 35

DAMAGE TO TEST INSTALLATION 35
VEHICLE DAMAGE 35
BRIDGE PIER INSTRUMENTATION FORCES 35

APPENDIX C. RESULTS FOR TEST NO. 429730-1 43
TEST VEHICLE 43
WEATHER CONDITIONS 43
TEST DESCRIPTION 43
DAMAGE TO TEST INSTALLATION 43
VEHICLE DAMAGE 43
BRIDGE PIER INSTRUMENTATION FORCES 43

APPENDIX D. DESIGN OF INSTRUMENTED BRIDGE PIER 51

APPENDIX E. RAW DATA FROM CRASH TESTING (provided on CD) ..... inside back cover

LIST OF FIGURES

Figure **Page**

Figure 2.1. Force on Top and Bottom Load Cells during Test No. 429730-2..... 4
Figure 2.2. Total Force during Test No. 429730-2..... 4
Figure 2.3. Sequence Comparison of Simulation versus Actual Crash Test. 5
Figure 2.3. Sequence Comparison of Simulation versus Actual Crash Test (Continued)..... 6
Figure 2.3. Sequence Comparison of Simulation versus Actual Crash Test (Continued)..... 7
Figure 2.4. Sequential Photographs for Test No. 429730-2. 8
Figure 2.5. Total 50-ms Average Force for Test No. 429730-2. 9
Figure 2.6. Total 25-ms Average Force for Test No. 429730-2. 9
Figure 2.7. Renderings of Finite Element Model of the Pier and Structural Support System.. 11
Figure 2.8. Schematic Drawing of Two-Dimensional Idealization of Pier System under Load..... 12
Figure 2.9. Truck Force at the Interface between the Pier and Truck as a Function of Time. .. 15
Figure 2.10. Plot of Height of Force for Test No. 429730-2. 16
Figure 2.11. Impact Force Distribution along the Height of the Pier at 0.2 sec from Finite Element Model *(2)*. 16
Figure 2.12. Force on Top and Bottom Load Cells during Test No. 429730-1..... 18
Figure 2.13. Total Force during Test No. 429730-1..... 18
Figure 2.14. Sequential Photos for Test No. 429730-1. 19
Figure 2.15 Total and Total 50-ms Average Force for Test No. 429730-1..... 20
Figure 2.16. Total and Total 25-ms Average Force for Test No. 429730-1..... 20
Figure 2.17. Plot of Height of Force for Test No. 429730-1. 21
Figure B1. Vehicle/Installation Geometrics for Test No. 429730-2. 36
Figure B2. Vehicle before Test No. 429730-2. 37
Figure B3. Properties for the Vehicle for Test No. 429730-2. 38
Figure B4. Sequential Photographs for Test No. 429730-2 (Oblique and Perpendicular Views). 39
Figure B5. Installation after Test No. 429730-2. 40
Figure B6. Vehicle after Test No. 429730-2. 41
Figure B7. Top and Bottom Forces for Test No. 429730-2. 42
Figure B8. Total Force and Total 50-ms Average Force for Test No. 429730-2..... 42
Figure C1. Vehicle/Installation Geometrics for Test No. 429730-1. 44
Figure C2. Vehicle before Test No. 429730-1. 45
Figure C3. Properties for the Vehicle for Test No. 429730-1. 46
Figure C4. Sequential Photographs for Test No. 429730-1 (Oblique and Perpendicular Views). 47
Figure C5. Installation after Test No. 429730-1. 48
Figure C6. Vehicle after Test No. 429730-1. 49
Figure C7. Top and Bottom Forces for Test No. 429730-1. 50
Figure C8. Total and Total 50-ms Average Force for Test No. 429730-1..... 50

LIST OF TABLES

Table **Page**

Table 2.1. Numerical Values for Problem Constants. 13

CHAPTER 1. INTRODUCTION

INTRODUCTION

The *AASHTO*[*] *LRFD*[†] *Bridge Design Specifications* contains detailed requirements for protecting bridge piers from vehicle collisions or designing piers to resist collision loads *(1)*. Supporting documentation for this design requirement, both its applicability and the magnitude of the design force, is not extensive. Further detailed guidance for the design engineer is not available.

Two issues exist:

1. What risks warrant application of the requirements?
2. Is the magnitude of the design force appropriate?

OBJECTIVES/SCOPE OF RESEARCH

A research study was performed to address these issues. It consisted of two phases with Phase 1 including the following tasks:

1a. Literature review,
1b. Computer simulations of vehicle/bridge column and abutment collisions,
1c. Accident survey and analysis study,
1d. Development of a risk analysis methodology for vehicle/bridge column and abutment collisions (analogous to AASHTO LRFD vessel impact requirements),
1e. Detailed justification and work plan for research (if any) to be conducted under Phase 2 of the project, and
1f. Provision of facilities to host a meeting to present Phase 1 results to project participants from other state departments of transportation (DOTs).

Results of Phase 1 work are reported in *Analysis of Large Truck Collisions with Bridge Piers: Phase 1. Report of Guidelines for Designing Bridge Piers and Abutments for Vehicle Collisions* for the Texas Department of Transportation (TxDOT) *(2)*.

Two full-scale crash tests involving an 80,000-lb tractor-trailer impacting an instrumented bridge pier were performed in Phase 2 of this study and are described in this report. The objective of these tests was to measure collision forces applied to the pier. Ballast in the trailer consisted of bags of sand placed on pallets. This is considered to be deformable cargo. The nature of cargo (deformable versus rigid) has a very strong influence on the magnitude of force generated in a collision as was demonstrated by the results of work performed in Phase 1 of this study *(2)*.

---

[*] American Association of State Highway and Transportation Officials.
[†] Load Resistance Factor Design.

CHAPTER 2. FULL-SCALE CRASH TESTS

ANALYSIS OF CRASH TEST RESULTS

Details of the tests and the instrumented pier are contained in Appendices A through D. The pier was 36 inches in diameter and 14 ft tall, and was supported in the longitudinal direction by two load cells (see Appendix A for complete construction details). The trucks were van-type semi-tractor-trailers ballasted with bags of sand on pallets. The intended alignment was to have the centerline of the truck on the centerline of the pier. However, in the first test, the truck veered to the left about 2 ft immediately prior to contact with the pier. Impact speed for both tests was nominally 50 mi/h.

Data from both tests provide information for selecting a design force for bridge piers subject to truck collisions. However, the centerline of the truck was aligned with the centerline of the pier, as intended, in test number 2, and the results of that test are addressed first in this report.

Test Number 2

Data from load cells are presented in Appendix B, and plots of total force versus time are repeated in Figures 2.1 and 2.2 for further analysis. Also, images at times of selected events taken from the computer simulation reported earlier *(2)* and from video of full-scale crash test number 2 are presented in Figure 2.3. Sequential photos from the high-speed film are shown in Figure 2.4.

Initial contact of the truck with the pier is designated time equals zero. The frame of the truck began interacting with the pier at 0.016 sec, and the engine began interacting with the pier at 0.030 sec. These and other events are noted on the force traces in Figures 2.5 and 2.6. The frame and engine contact correspond with the first major buildup of force, with a short duration, of about 950 kips. At 0.232 and 0.260 sec, the tractor was in an advanced state of crush, and the trailer was interacting more directly with the pier through the crushed cab of the tractor. In the simulation, the kingpin failed structurally and allowed the trailer to slide forward on the tractor chassis. In the test, cross members of the tractor frame failed structurally, and the longitudinal frame rails passed on either side of the pier. During this phase of the collision, the peak force was about 550 kips. At 0.380 to 0.393 sec, the trailer was interacting more directly with the pier, and the peak force built up to about 520 kips.

If a 0.050-sec (50-ms) moving average of the original raw load cell data is computed, the force-versus-time (with the force value plotted at the mid-time of the 0.050-sec window) relationship presented in Figure 2.5 results. The maximum values of force are near 400 kips. One peak occurs at about 0.030 sec after initial contact when the truck engine and frame are interacting with the pier. Two others occur at about 0.280 and 0.400 sec when the trailer and ballast are interacting with the pier.

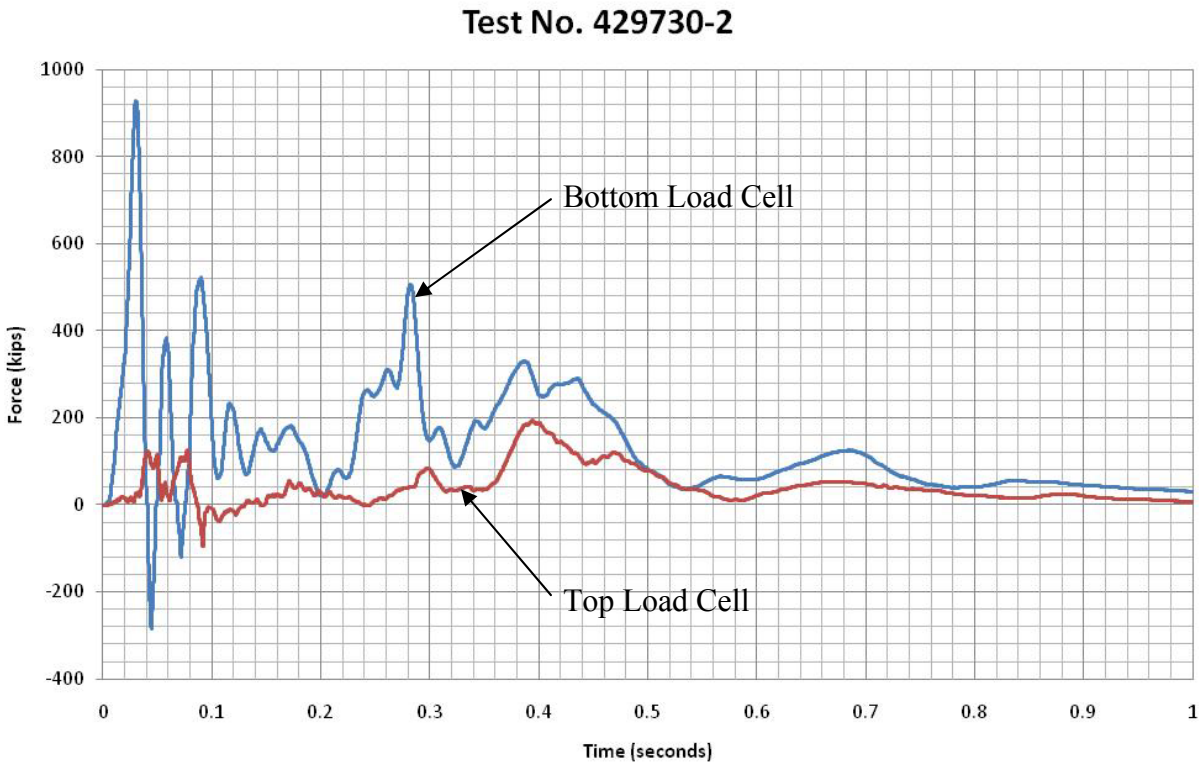

Figure 2.1. Force on Top and Bottom Load Cells during Test No. 429730-2.

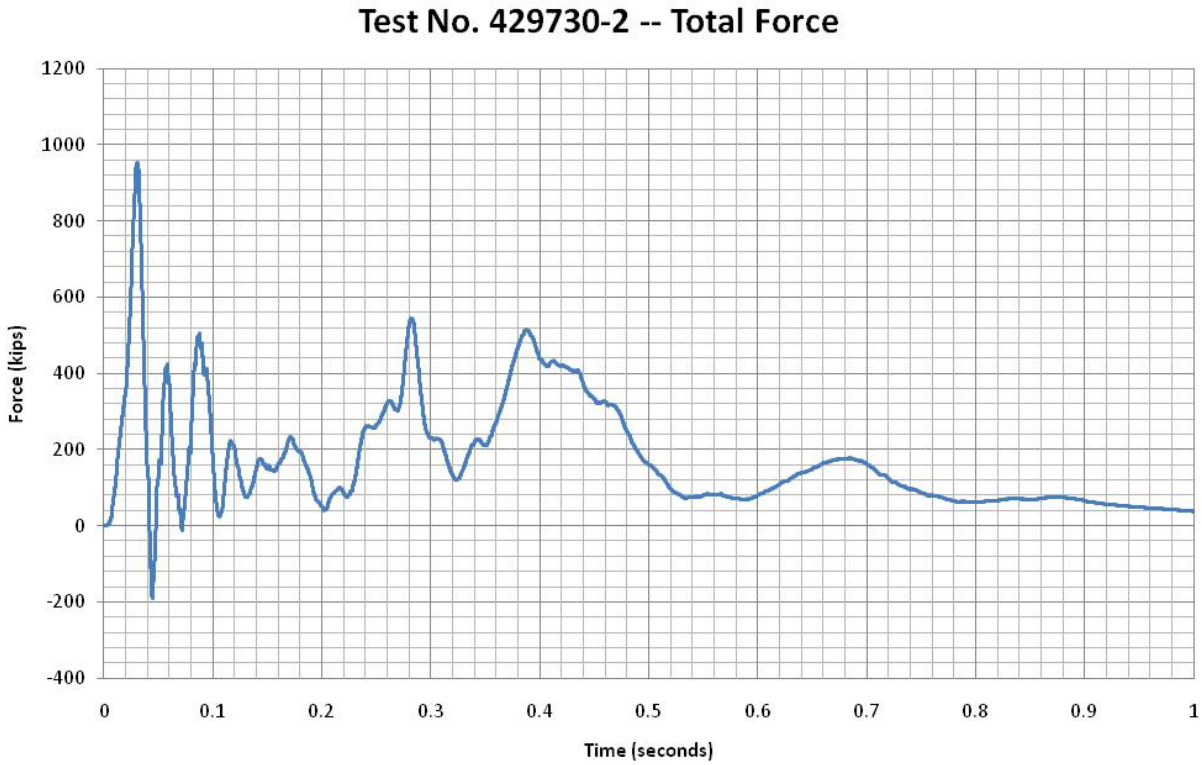

Figure 2.2. Total Force during Test No. 429730-2.

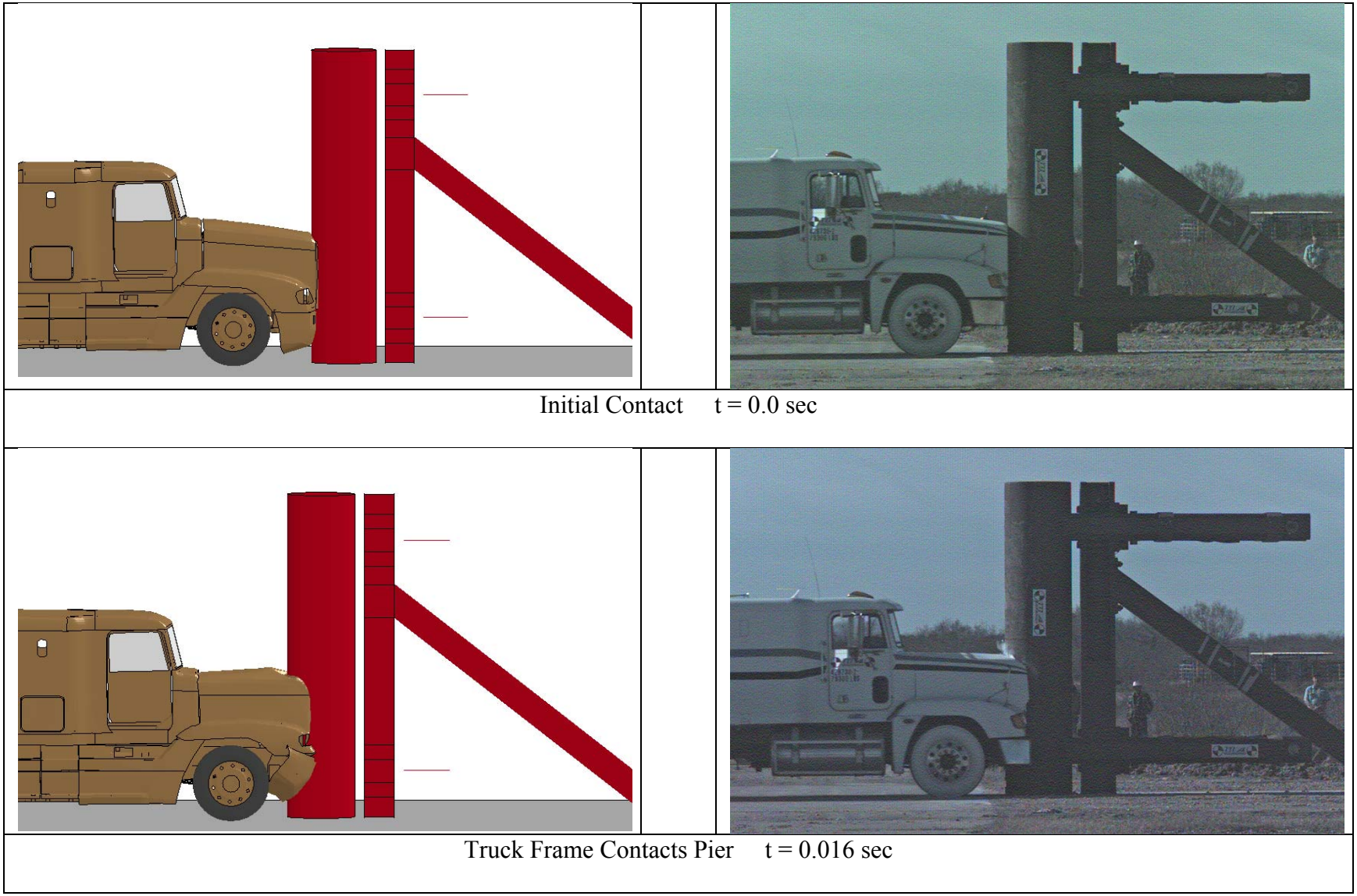

Figure 2.3. Sequence Comparison of Simulation versus Actual Crash Test.

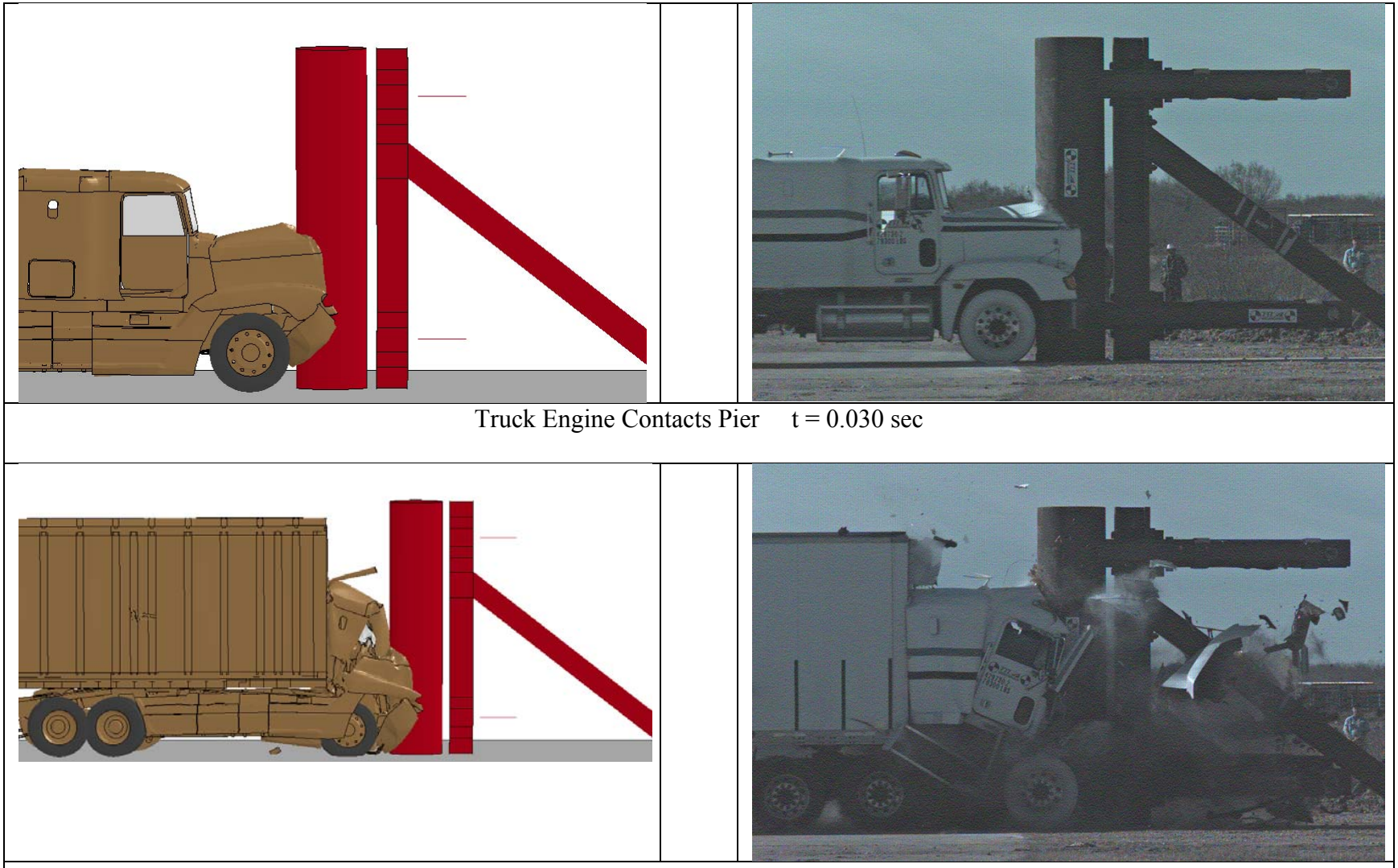

Figure 2.3. Sequence Comparison of Simulation versus Actual Crash Test (Continued).

Figure 2.3. Sequence Comparison of Simulation versus Actual Crash Test (Continued).

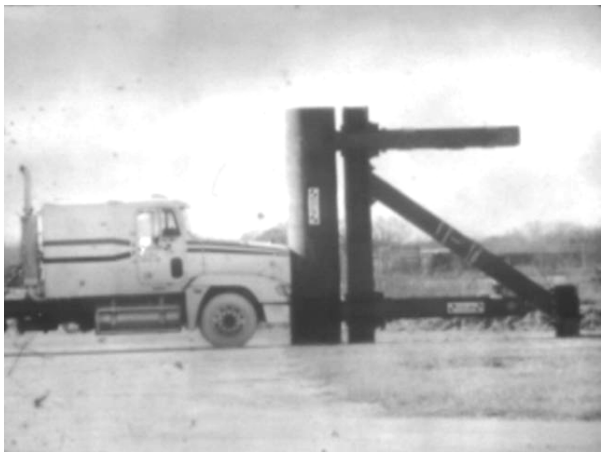

0.000 sec

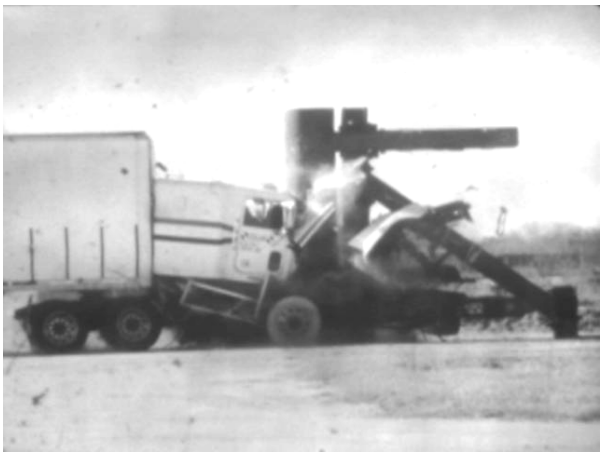

0.187 sec

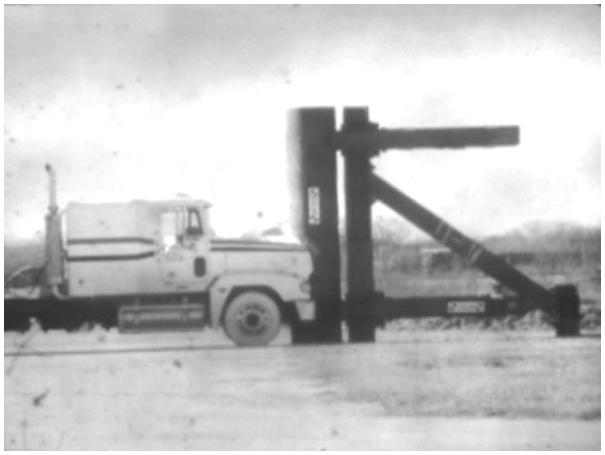

0.020 sec

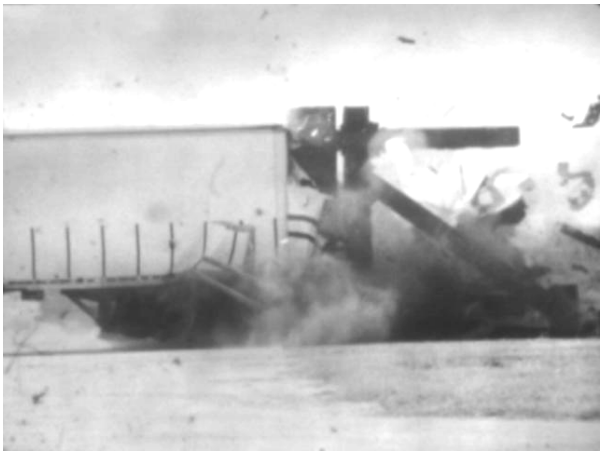

0.393 sec

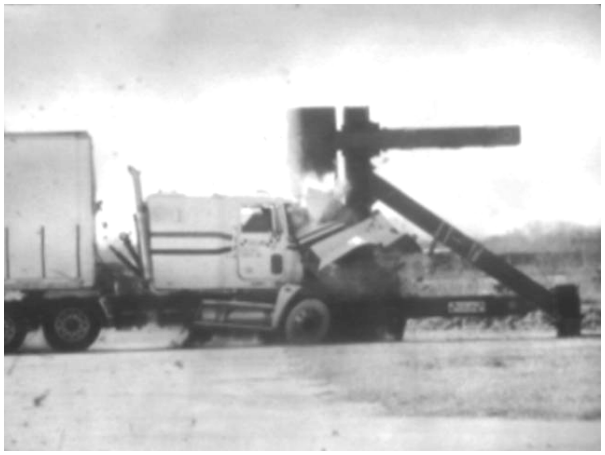

0.125 sec

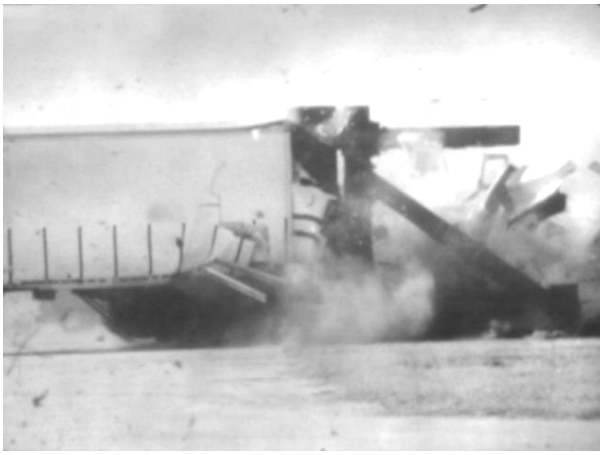

0.452 sec

Figure 2.4. Sequential Photographs for Test No. 429730-2.

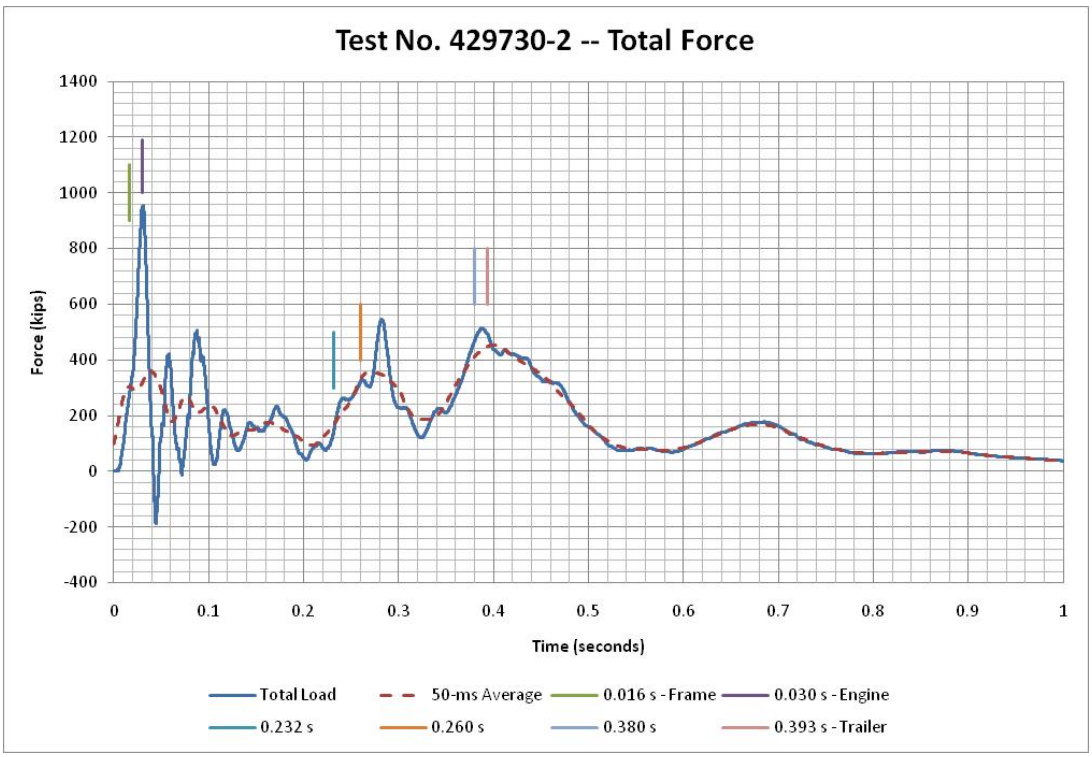

Figure 2.5. Total 50-ms Average Force for Test No. 429730-2.

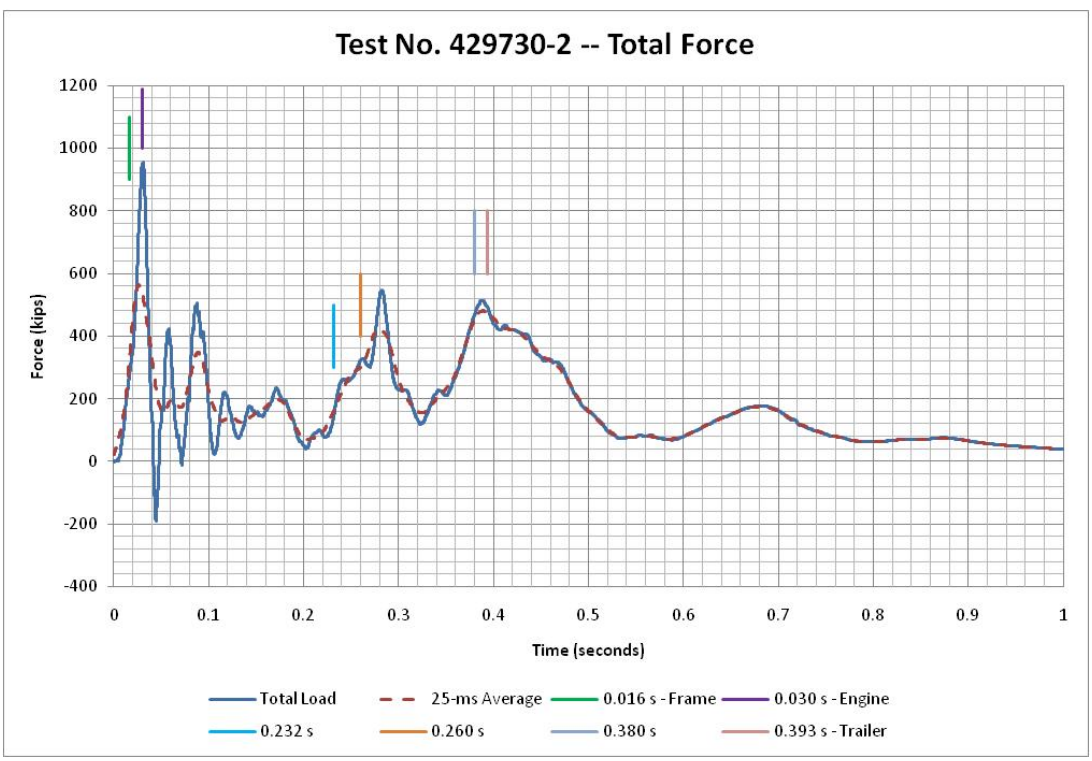

Figure 2.6. Total 25-ms Average Force for Test No. 429730-2.

A 0.050-sec moving average has been used extensively in "filtering" and analyzing data from accelerometers from full-scale vehicle crash tests. This technique has been used to analyze accelerometer and load cell data from tests on an instrumented wall to establish equivalent static design force for longitudinal barriers subjected to redirection impacts *(3)*. Design forces established in this manner have been used to design bridge rails and other longitudinal barriers with good results. However, further discussion of the process is warranted. The moving average window of a selected time interval serves to filter out high spikes of short duration. In some cases, the spikes are noise in the signal and are not meaningful in terms of the response of the structure. However, if the selected time interval is too long, meaningful response data will be inappropriately reduced and the resulting calculated force values will be lower than the structure experienced.

Total force from the load cells was filtered using a 25-ms moving average, and the results are presented in Figure 2.6. This process results in peak forces of about 560 kips at about 0.025 sec, 340 kips at 0.090 sec, 415 kips at 0.280 sec, and 480 kips at 0.390 sec. Unfiltered force data from load cells for both test number 1 and test number 2 are contained on a compact disk included in the back jacket of this report.

Forces discussed above were obtained from strain gauges located at the mid-length of the load cells and do not represent forces at the interface of the truck and bridge pier. This begs a question: at what location should the design force be defined? One argument is that observed structural failures of piers subjected to collisions by trucks consist of shear failure planes in the pier above and below the collision force. The appropriate design force is the one that occurs at the shear failure planes.

Further analyses of data from the instrumented pier were performed.

Dynamic Analysis of Pier System

Figure 2.7 shows renderings of a detailed, geometrically nonlinear, three-dimensional finite element model of the pier and its structural support system. In these models, the pier is represented as a rigid body resting upon a rigid plate across which the pier is permitted to slide without friction. All other elements are linear elastic. Figure 2.7(a) shows a 100-kip loading applied to the pier at the level of the uppermost instrumented support arm. Figure 2.7(b) shows a 100-kip loading applied to the pier at the level of the lowermost instrumented support arm. Results from these two models are used below to define equivalent stiffness values for two linear springs that represent the essential behavior of the supporting structure at its connections to the pier.

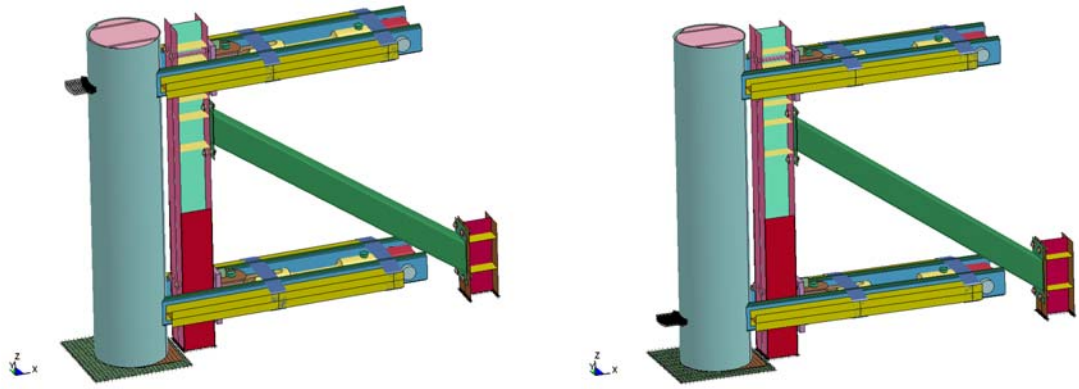

(a) (b)

Figure 2.7. Renderings of Finite Element Model of the Pier and Structural Support System.

Equation 1 presents the force-displacement relationships at the two connection positions on the pier. The force applied at the upper, or top, location is denoted F_t. The force applied at the lower, or bottom, location is denoted F_b. The displacement at the upper, or top, location caused by F_t is denoted δ_{tt}. The displacement at the lower, or bottom, location caused by F_t is denoted δ_{bt}. The displacement at the upper, or top, location caused by F_b is denoted δ_{tb}. The displacement at the lower, or bottom, location caused by F_b is denoted δ_{bb}. The stiffness of the upper, or top, equivalent spring is denoted k_t. The stiffness of the lower, or bottom, equivalent spring is k_b.

$$\begin{bmatrix} \delta_{tt} & \delta_{bt} \\ \delta_{tb} & \delta_{bb} \end{bmatrix} \begin{Bmatrix} k_t \\ k_b \end{Bmatrix} = \begin{Bmatrix} F_t \\ F_b \end{Bmatrix} \tag{1}$$

Given the definitions for the displacement matrix and force vector in Equation 1, the equivalent stiffness vector can be written as shown in Equation 2.

$$\begin{Bmatrix} k_t \\ k_b \end{Bmatrix} = \begin{Bmatrix} \dfrac{\delta_{bb}F_t - \delta_{bt}F_b}{\delta_{bb}\delta_{tt} - \delta_{bt}\delta_{tb}} \\ \dfrac{\delta_{tb}F_t - \delta_{tt}F_b}{\delta_{bb}\delta_{tt} - \delta_{bt}\delta_{tb}} \end{Bmatrix} \tag{2}$$

Equations 3 and 4 show numerical results from the analyses evaluated according to Equations 1 and 2, respectively.

$$\begin{bmatrix} 0.4945 \text{ inch} & 0.0160 \text{ inch} \\ 0.0063 \text{ inch} & 0.0870 \text{ inch} \end{bmatrix} \begin{Bmatrix} k_t \\ k_b \end{Bmatrix} = \begin{Bmatrix} 100.0 \text{ kip} \\ 100.0 \text{ kip} \end{Bmatrix} \tag{3}$$

$$\begin{Bmatrix} k_t \\ k_b \end{Bmatrix} = \begin{Bmatrix} 165.5 \dfrac{\text{kip}}{\text{inch}} \\ 1137 \dfrac{\text{kip}}{\text{inch}} \end{Bmatrix} \tag{4}$$

Figure 2.8 illustrates a two-dimensional idealization of the pier and its structural support system. The pier is represented by a rigid cylinder with uniformly distributed mass, *m*, and length, *L*. The rotational mass moment of inertia of the pier about its mass center is denoted *I*. A force, *F(t)*, is applied to the face of the pier at a time-varying position, *y(t)*. The structural support system is represented by two linear springs of negligible mass. The springs are separated by a distance, s, and centered about the mass centroid of the pier. The stiffness of the upper, or top, spring is denoted k_t. The stiffness of the lower, or bottom, spring is denoted k_b. Assuming that vertical translation of the rigid mass is restrained, this system possesses two degrees of freedom: for example, rotation about the mass center, $\omega(t)$, and horizontal translation of the mass center, $\delta_m(t)$.

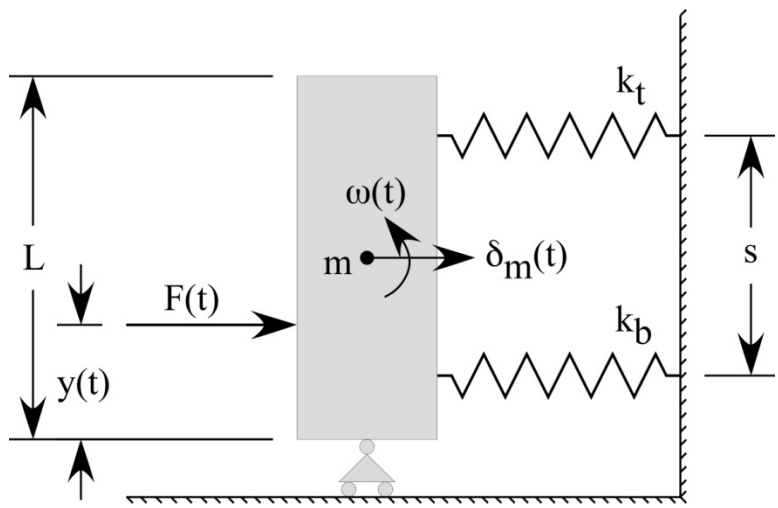

Figure 2.8. Schematic Drawing of Two-Dimensional Idealization of Pier System under Load.

The equations of motion for this system can be written as shown in Equation 5.

$$\begin{bmatrix} m & 0 \\ 0 & I \end{bmatrix} \begin{Bmatrix} \ddot{\delta} \\ \ddot{\omega} \end{Bmatrix} + \begin{bmatrix} (k_b + k_t) & (k_b - k_t)\frac{s}{2} \\ (k_b - k_t)\frac{s}{2} & (k_b + k_t)\frac{s^2}{4} \end{bmatrix} \begin{Bmatrix} \delta \\ \omega \end{Bmatrix} = \begin{Bmatrix} F(t) \\ F(t)\left(\frac{L}{2} - y(t)\right) \end{Bmatrix} \tag{5}$$

Expressions for the natural frequencies of this system are given in Equation 6.

$$\begin{Bmatrix} f_\delta \\ f_\omega \end{Bmatrix} = \frac{1}{2\pi} \begin{Bmatrix} \sqrt{\frac{k_b + k_t}{m}} \\ \frac{s}{2}\sqrt{\frac{k_b + k_t}{I}} \end{Bmatrix} \tag{6}$$

Table 2.1 lists numerical values for the variables that are constant.

Table 2.1. Numerical Values for Problem Constants.

Variable	Value
L	167.7 inches
M	0.06157 $\frac{\text{kip-sec}^2}{\text{inch}}$
I	144.6 kip-sec^2-inch
S	120.0 inches
k_t	165.5 $\frac{\text{kips}}{\text{inch}}$
k_b	1137 $\frac{\text{kips}}{\text{inch}}$
f_δ	23 Hz
f_w	29 Hz

Analysis of Data from the Full-Scale Pier Impact Experiment

Using the load cell data from the experiment, one can construct a time history of the displacements of the two connection points on the pier by dividing each load time history by an appropriate equivalent spring stiffness; see Table 2.1. Subsequently, these displacement time histories can be differentiated numerically to construct an acceleration time history for the mass center of the pier. Knowing the force time histories at the connection points, and having thus obtained the acceleration time history for the center of mass, one can use Equation 5 to directly calculate an estimate of the time-varying force imparted by the truck on the pier.

In these computations, it is highly desirable, and numerically necessary even, to remove extraneous high-frequency content from the load data, and subsequently and additionally from the computed acceleration time history. Simple moving averages are sufficient for this purpose, though some care is required to accomplish these calculations. Table 2.1 lists the natural frequency of the pier system as roughly 30 Hz, i.e., a period of 33 ms. This suggests that the largest period for a moving average must be less than 16 ms, or the filtering will remove essential dynamic response information from the data.

Figure 2.9 is a plot of truck force as a function of time. The data for the plot were obtained as described immediately above and include a 10-ms moving average. As shown in Figure 2.9, the peak force that the pier experienced during the experiment was nearly 700 kips at the interface between the pier and truck.

The height of the centroid of force obtained from load cell data is plotted as a function of time in Figure 2.10. During some phases of the collision, the values are outside the reasonable range because of the nature of data from the load cells. When outputs from the load cells were of the opposite sign, the denominator in the equation for computing location of force was at or near zero, making the computation unstable. Similar information was obtained from finite element modeling reported earlier *(2)* and is reproduced in Figure 2.11.

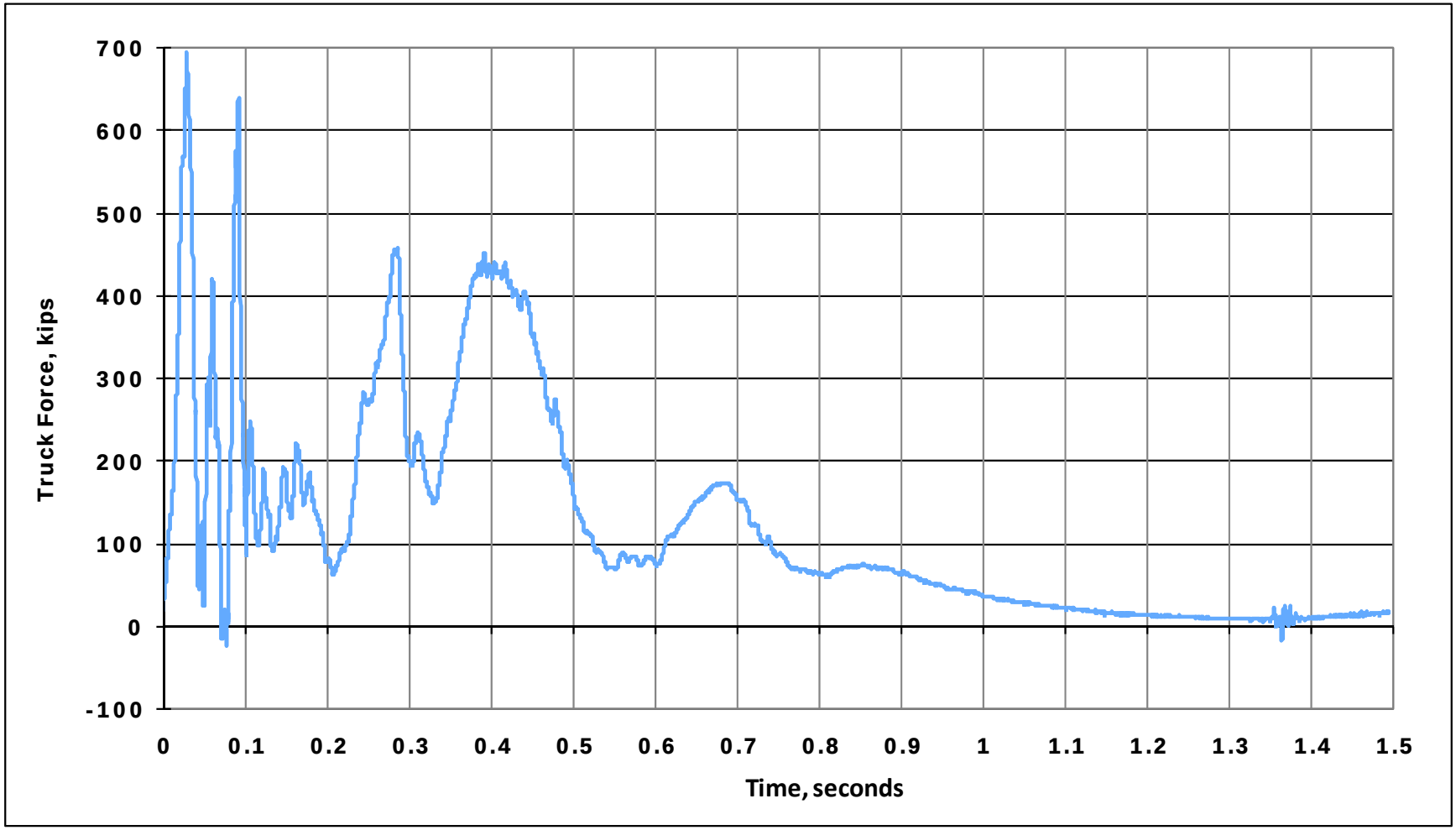

Figure 2.9. Truck Force at the Interface between the Pier and Truck as a Function of Time.

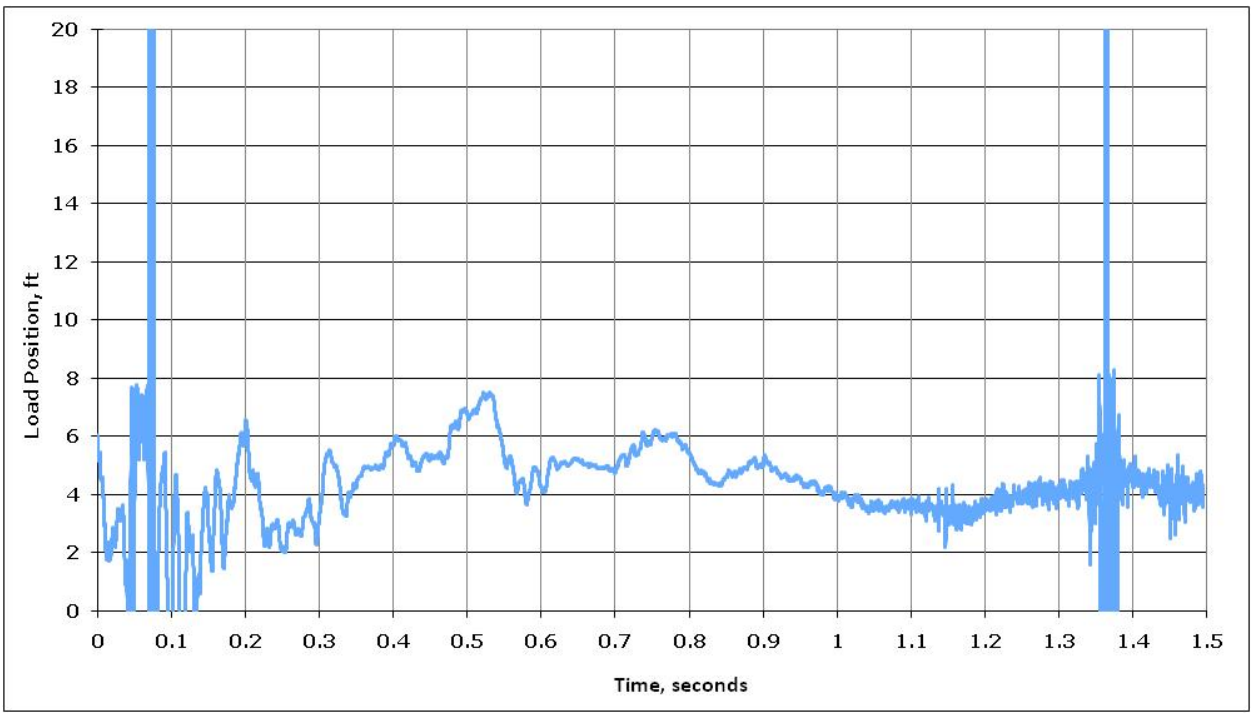

Figure 2.10. Plot of Height of Force for Test No. 429730-2.

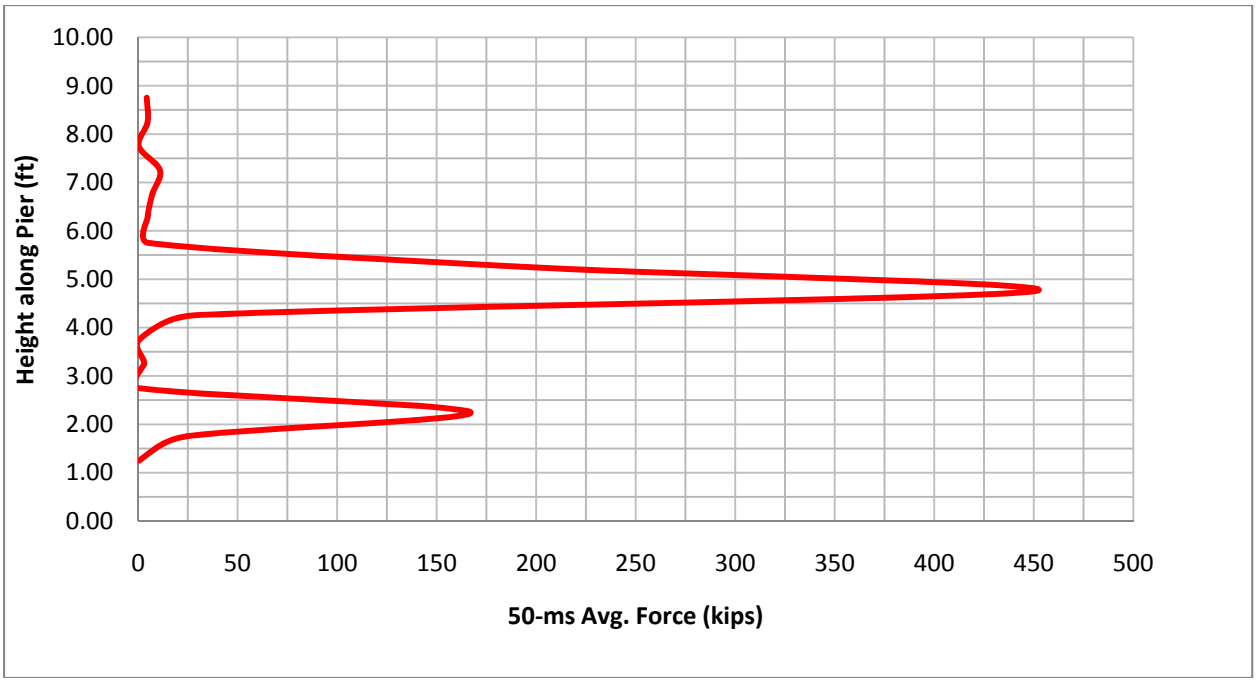

Figure 2.11. Impact Force Distribution along the Height of the Pier at 0.2 sec from Finite Element Model *(2)*.

Test Number 1

Data from load cells from test number 1 are presented in Appendix C, and plots of total force versus time are repeated in Figures 2.12 and 2.13 for further analysis. Also, images at times of selected events taken from video of the full-scale crash test are presented in Figure 2.14. Interaction of the truck with the bridge pier differed from that during test number 2 because of the alignment of the truck with the pier.

At 0.017 sec after initial contact, the front wheel and frame of the truck interacted with the pier. The right side of the tractor continued to interact with the pier until 0.306 sec after initial contact when the front of the trailer contacted the pier. The interaction of the trailer with the pier caused the force to build up to a peak of slightly more than 600 kips. The maximum 0.050-sec moving average force at this time was slightly less than 400 kips, and the maximum 0.025-sec moving average was 520 kips. Figures 2.15 and 2.16 present the 0.050-sec and 0.025-sec moving averages for test number 1, respectively. The forces generated during the interaction of the trailer with the pier in this test are comparable to those generated in test number 2. A plot of the height of force above ground is shown in Figure 2.17.

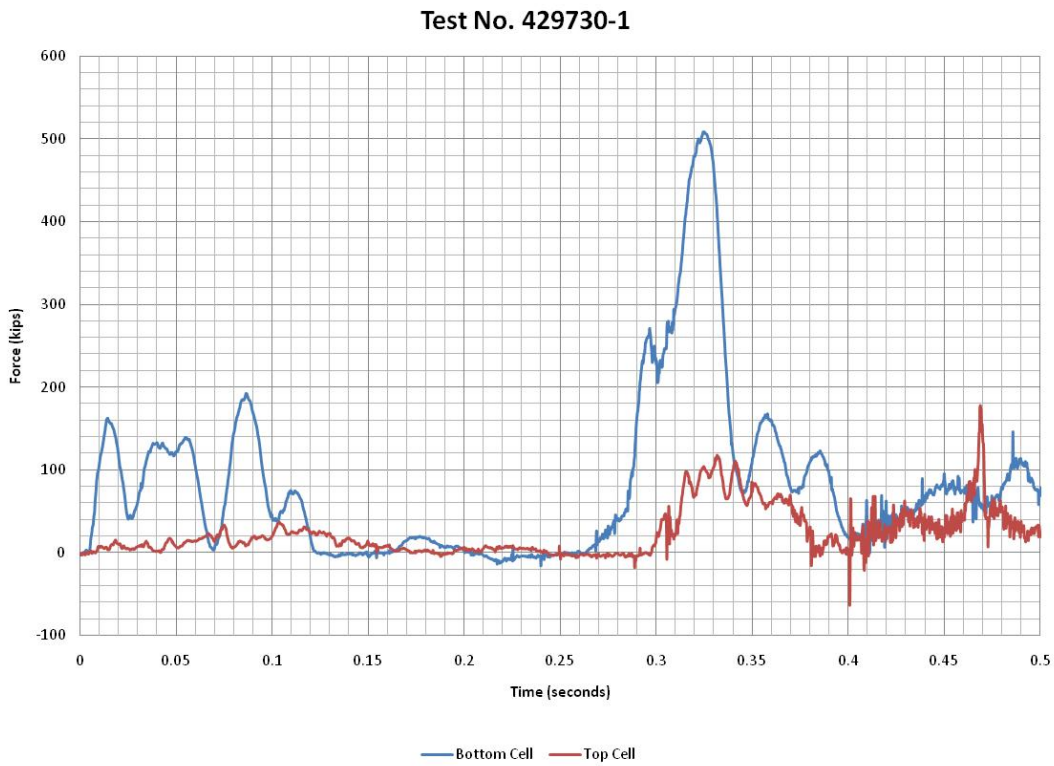

Figure 2.12. Force on Top and Bottom Load Cells during Test No. 429730-1.

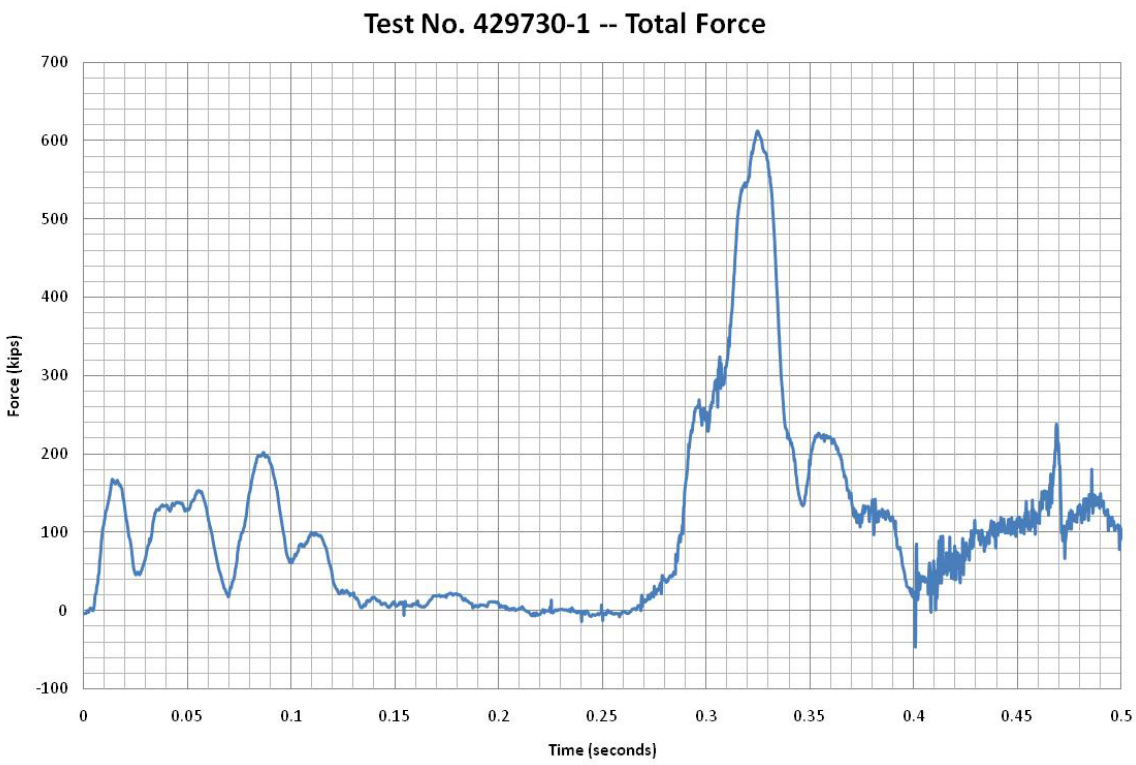

Figure 2.13. Total Force during Test No. 429730-1.

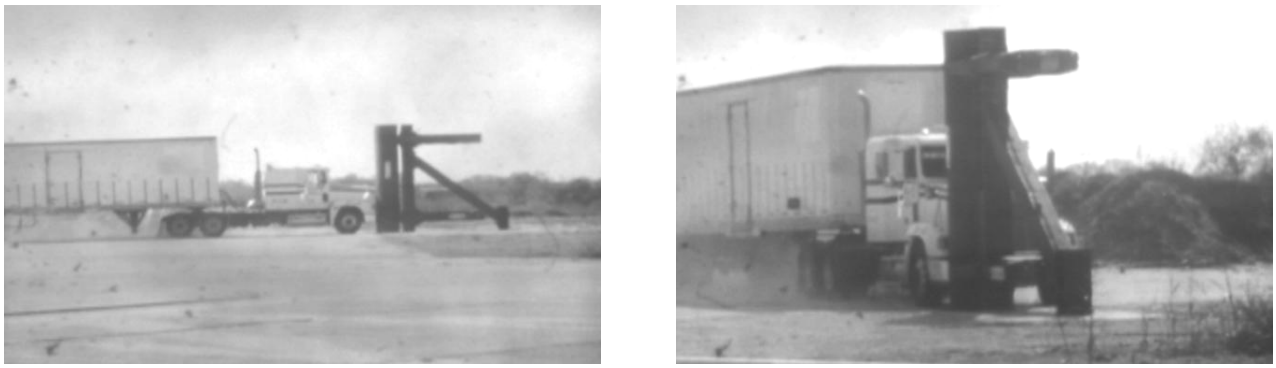

0.000 sec

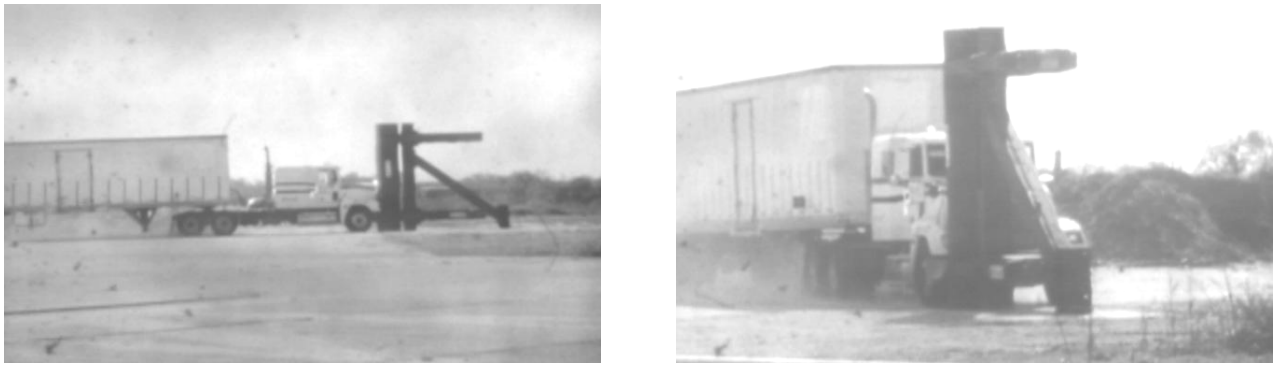

0.017 sec

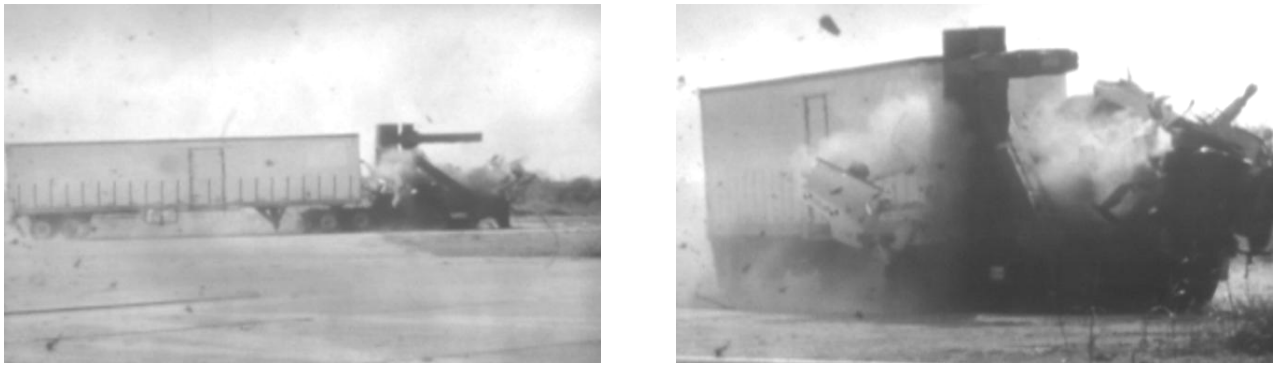

0.262 sec

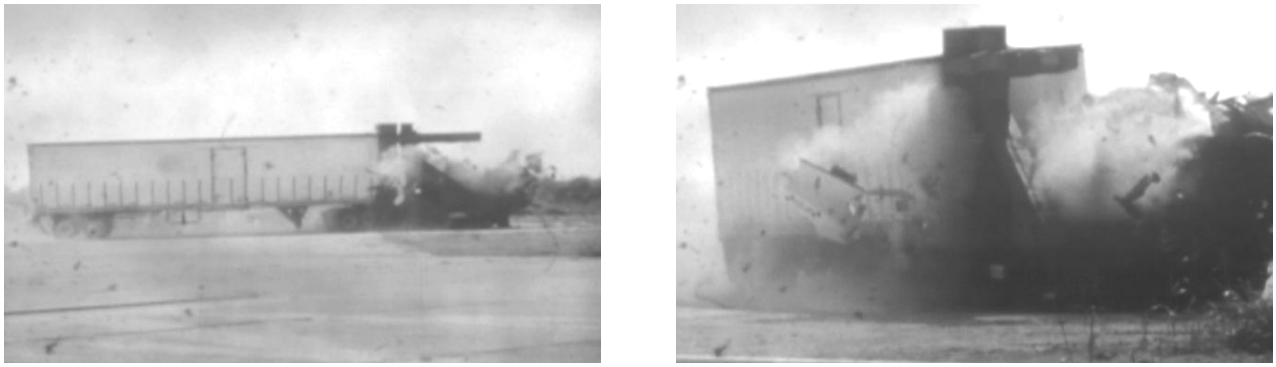

0.306 sec

Figure 2.14. Sequential Photos for Test No. 429730-1.

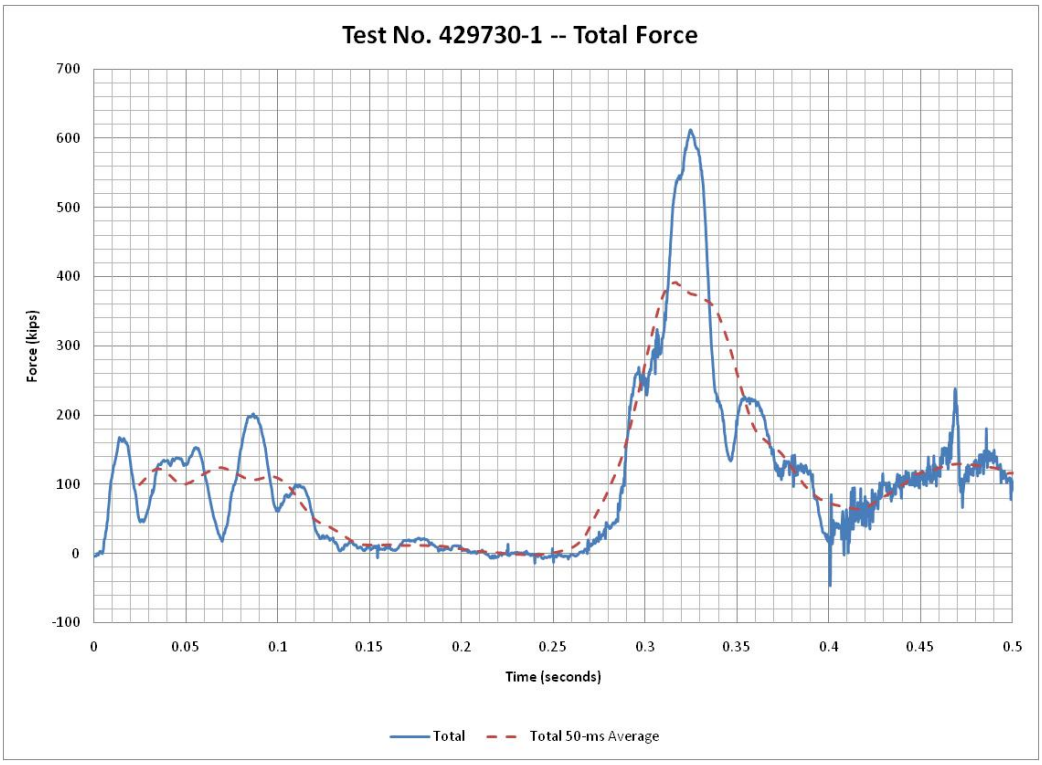

Figure 2.15. Total and Total 50-ms Average Force for Test No. 429730-1.

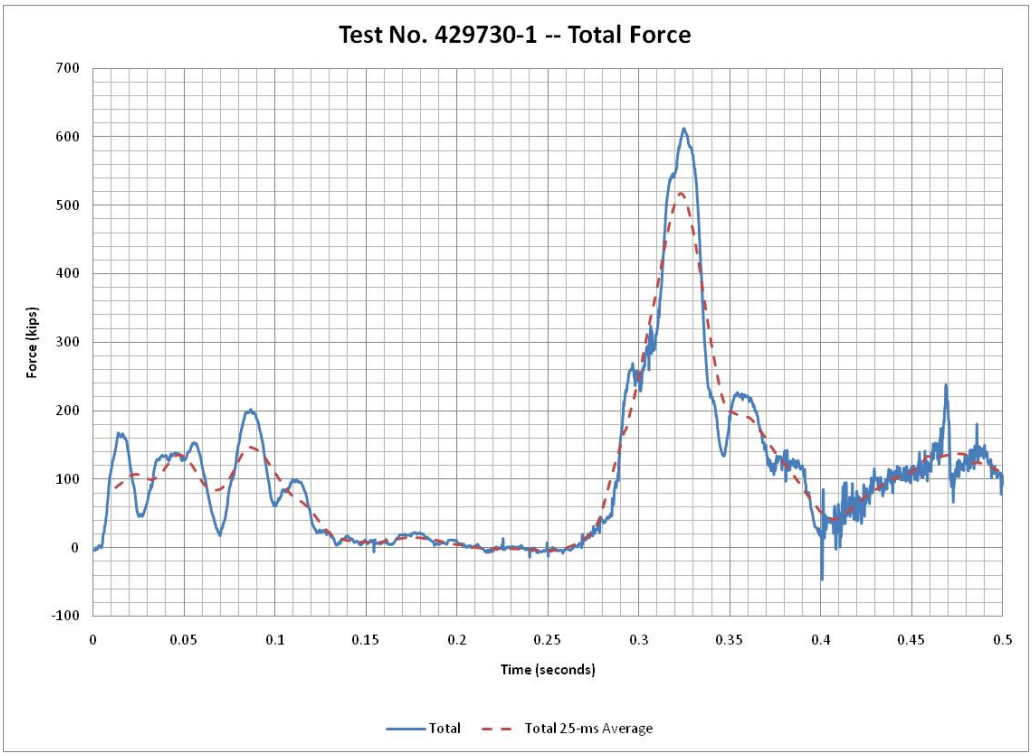

Figure 2.16. Total and Total 25-ms Average Force for Test No. 429730-1.

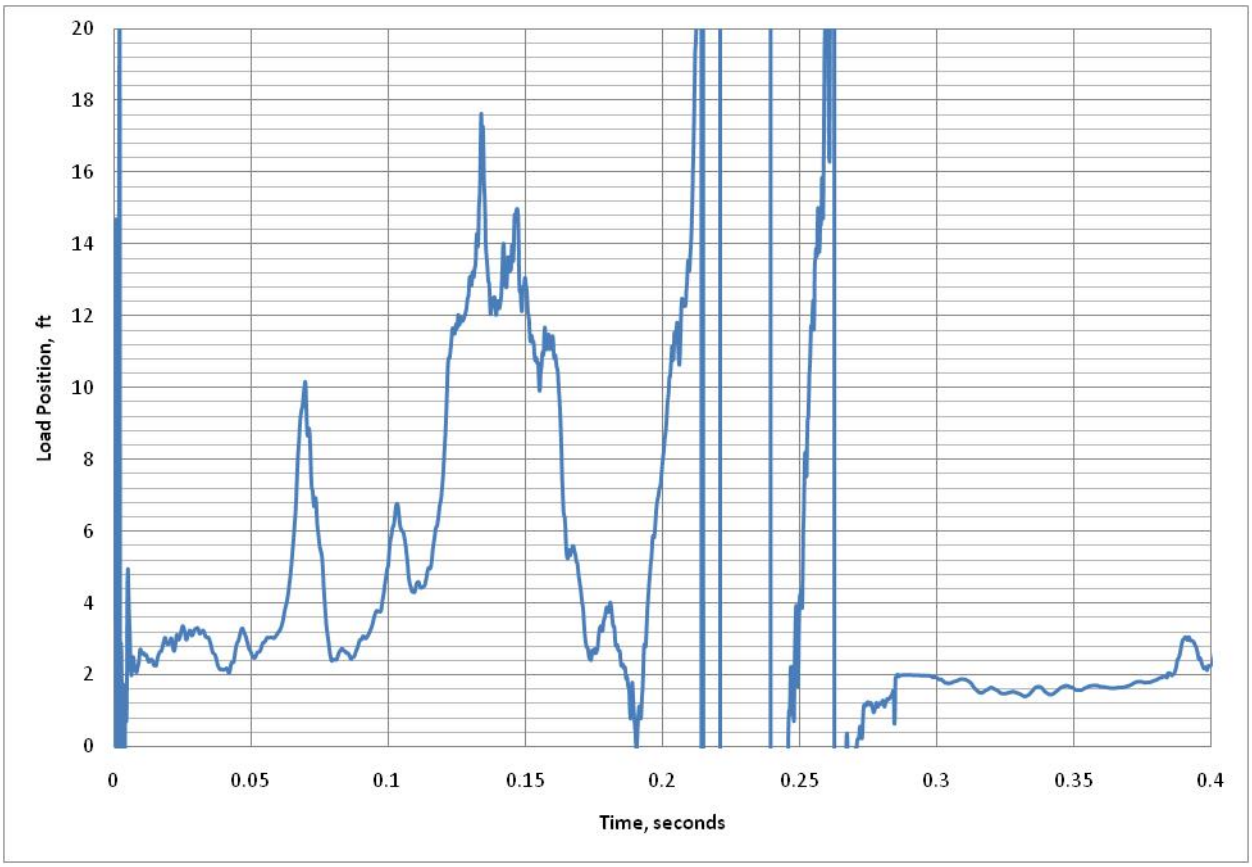

Figure 2.17. Plot of Height of Force for Test No. 429730-1.

CHAPTER 3. RECOMMENDATIONS

CURRENT AASHTO REQUIREMENTS

In Section 3.4.1 Load Factors and Combinations, AASHTO specifies that EXTREME EVENT II include vehicle collision force (CT) with a load factor (γ) of 1.00.

In Section 3.6.5.1 Protection of Structures, AASHTO allows structures that are protected by barriers meeting crash test requirements for Test Level 5 to be exempt from design requirements of Section 3.6.5.2. Test Level 5 in Section 13 of AASHTO includes an 80,000-lb van-type tractor-trailer impacting a railing at an approach angle of 15 degrees and traveling 50 mi/h.

In Section 3.6.5.2 Vehicle and Railway Collision with Structures, AASHTO specifies that " . . . piers located within a distance of 30.0 ft to the edge of the roadway . . . shall be designed for an equivalent static force of 400 kips, which is assumed to act in any direction in a horizontal plane, at a distance of 4.0 ft above ground" *(1)*.

DIRECTION OF IMPACT

AASHTO currently requires that the pier design force be assumed to act in any direction in a horizontal plane. This requirement should be reconsidered because the geometrics of roadway and bridge structures often limit the range of direction at which a truck might impact a bridge pier. In situations where a roadway passes beneath a structure, collisions of trucks with a pier would be limited to those where the truck would depart the traveled way. For crash testing of longitudinal barriers with large trucks, a 15-degree approach angle has been selected *(4)*. It is recommended that similar reasoning be applied to establish a required range of impact direction for collisions of trucks with bridge piers.

Photos taken at collision sites and reported earlier show that in many cases the truck was traveling nearly parallel to the edge of the roadway *(2)*. These observations lead to the recommendation that the direction of application of an equivalent static force be within the range of zero to 15 degrees relative to the edge of the roadway, unless geometrics of a site indicate otherwise.

HEIGHT OF COLLISION FORCE

Information from finite element modeling reported earlier and from test data reported herein indicates that the centroid of the applied collision force for the types of trucks studied is about 5 ft above ground *(2)*.

EFFECT OF TYPE OF BALLAST (CARGO)

Ballast used in the test vehicle was bags of sand stacked on pallets throughout the length of the trailer and not further restrained. This is designated deformable ballast. Logic dictates and simulation analyses confirm that the force generated on a pier during a collision is highly dependent on the properties (deformable versus rigid) of the ballast if the ballast interacts with the pier. When rigid ballast is involved, collision forces can be extremely high. Results reported herein, including magnitude of force, are applicable to the type of truck and cargo used in the tests and are not applicable to other types of trucks/cargo.

MAGNITUDE OF EQUIVALENT STATIC FORCE

In the full-scale collision test number 2 with an 80,000-lb van-type tractor-trailer traveling at 50 mi/h and loaded with deformable cargo, load cells on the simulated bridge pier showed short-duration peak loads slightly above 900 kips. Several filtering processes and further detailed analysis of the data indicate that 600 kips is a more appropriate equivalent static force.

TYPE OF BRIDGE STRUCTURE

Two-column bents exist in many older, narrow bridge structures, and many of these columns would not be able to resist loads of the magnitudes reported herein. If one column in such a structure experiences structural failure, it is highly probable that deck spans above the column will collapse. Such failures were noted in the field study reported in Phase 1 *(2)*.

In other bridge structures having more than two columns supporting a bent cap, structural redundancy exists, and structural failure of one column may not cause the collapse of deck spans above. Some two-column bents are constructed with a partial-height wall between the columns. Such construction can be made highly resistant to collision loads. Also, partial-height walls can be retrofitted to two-column bents to provide increased resistance to collision loads.

EFFECT OF COLLISION SPEED

Collision speeds significantly below 50 mi/h should produce lower collision forces. However, the researchers were unable to develop a definitive relationship for force versus speed from the information available.

CHAPTER 4. SUMMARY AND CONCLUSIONS

SUMMARY

Two full-scale crash tests with an 80,000-lb van-type tractor-trailer impacting an instrumented, simulated bridge pier at 50 mi/h were performed. Ballast in the trailer consisted of bags of sand on pallets distributed throughout the trailer. Force data were collected from load cells installed on the bridge pier, and high-speed digital videos of the collisions were recorded. The data were analyzed to arrive at an equivalent static force for strength analysis/design of bridge piers subjected to collisions by large trucks. Analyses of the data indicate the equivalent static force is as much as 700 kips over a very short time duration. For trucks of more rigid construction and for trucks carrying more rigid cargo, the force would be expected to be higher.

CONCLUSIONS

An instrumented, simulated bridge pier was constructed, and two full-scale collisions with an 80,000-lb van-type tractor-trailer were performed on it. The trailer was loaded with bags of sand on pallets. Force-versus-time data were derived from load cells that support the simulated pier. The load cell data, when filtered with a 0.050-sec moving average, indicate an equivalent static design force of 400 kips. Refined analyses of the data indicate that an equivalent static design force at the interface of the truck and pier should be approximately 600 kips.

CHAPTER 5. IMPLEMENTATION STATEMENT

Information has been developed that indicates revisions should be made to selected sections of the *AASHTO LRFD Bridge Design Specifications*. Recommended revisions include the magnitude of equivalent static force, direction of application of force, and height of force above ground. The recommended revisions should be submitted to the appropriate AASHTO subcommittees for consideration. Recommended revisions are as follows:

- Change equivalent static force from 400 kips to 600 kips.
- Change direction of applied force from "any direction" to "zero to 15 degrees with the edge of the pavement."
- Change height of force from 4.0 ft above ground to 5.0 ft above ground.
- Incorporate the crash risk analysis methodology from Chapter 5 of *Analysis of Large Truck Collisions with Bridge Piers: Phase 1. Report of Guidelines for Designing Bridge Piers and Abutments for Vehicle Collisions.*

REFERENCES

1. AASHTO, *AASHTO LRFD Bridge Design Specifications,* Fourth Edition, American Association of State Highway and Transportation Officials, Washington, D.C., 2008.
2. C. E. Buth, W. F. Williams, M. S. Brackin, D. Lord, S. R. Geedipally, and A. Y. Abu-Odeh, *Analysis of Large Truck Collisions with Bridge Piers: Phase 1. Report of Guidelines for Designing Bridge Piers and Abutments for Vehicle Collisions,* Report 9-4973-1, Texas Transportation Institute, College Station, Texas, May 2010.
3. W. L. Beason and T. J. Hirsch, *Measurement of Heavy Vehicle Impact Forces and Inertia Properties,* Publication No. FHWA-RD-89-120 (TTI Project 7046), Texas Transportation Institute, College Station, Texas, May 1989.
4. AASHTO, *Manual for Assessing Safety Hardware*, First Edition, American Association of State Highway and Transportation Officials, Washington, D.C., 2009.

APPENDIX A. CRASH TEST AND DATA ANALYSIS PROCEDURES

TTI PROVING GROUND DISCLAIMER

The results of the crash testing reported herein apply only to the article being tested.

ISO 17025 Laboratory
Testing Certificate # 2821.01

Crash testing performed at:
TTI Proving Ground
3100 SH 47, Building 7091
Bryan, TX 77807

Wanda L. Menges, Research Specialist
Deputy Quality Manager

Richard A. Zimmer, Senior Research Specialist
Test Facility Manager
Quality Manager
Technical Manager

TEST FACILITY

The full-scale crash test reported herein was performed at the Texas Transportation Institute (TTI) Proving Ground. The TTI Proving Ground is an International Standards Organization (ISO) 17025 accredited laboratory with American Association for Laboratory Accreditation (A2LA) Mechanical Testing Certificate 2821.01. The full-scale crash test was performed according to TTI Proving Ground quality procedures and according to the *Manual for Assessing Safety Hardware (MASH)* guidelines and standards *(4)*.

The Texas Transportation Institute Proving Ground is a 2000-acre complex of research and training facilities located 10 miles northwest of the main campus of Texas A&M University. The site, formerly an Air Force base, has large expanses of concrete runways and parking aprons well suited for experimental research and testing in the areas of vehicle performance and handling, vehicle-roadway interaction, durability and efficacy of highway pavements, and safety evaluation of roadside safety hardware. The site selected for construction and testing of the bridge pier under this project is along an out-of-service runway. The runway consists of an unreinforced jointed-concrete pavement in 12.5-ft-by-15-ft blocks nominally 8 to 12 inches deep. The aprons and runways are over 50 years old, and the joints have some displacement but are otherwise flat and level.

The crash test and data analysis procedures were in accordance with guidelines presented in *MASH*. Brief descriptions of these procedures are presented as follows.

TEST ARTICLE

The test article for this project consisted of a 36-inch-diameter simulated steel bridge pier supported by a braced column load frame and foundation system. The rigid column was diagonally braced to a shorter vertical support anchored into the foundation for additional support of the simulated bridge pier. Two instrumented transducer links (load cells) were connected to the simulated bridge pier and supported by the load frame. These load cells were used to measure the impact force for the large impacting truck. These loads cells were independently attached to the rigid support column. The simulated bridge pier was 14 ft in height and was fabricated from 1-inch-thick A53 Grade B pipe material. For additional structural support of the impact face of the pier, a 120-degree arch of A53 Grade B pipe 34 inches in diameter and 1 inch thick was welded to the inner surface of the 36-inch-diameter bridge pier. Two rib plates 22¾ inches wide and 1½ inches thick were welded vertically inside the steel bridge pier for support of four horizontal built-up steel compression arms that were used to connect the steel bridge pier assembly to two instrumented load cells. The steel bridge pier was further supported by a reinforced concrete member that was constructed inside the open space between the two vertical rib plates. This reinforced concrete member measured approximately 17 inches by 30 inches in plan and was cast the entire length of the pier (14 ft). Reinforcement in the concrete member consisted of 18 #8 bars equally spaced within #4 enclosed stirrups spaced on 6-inch centers along the entire length of the bridge pier. After placement of the reinforcement cage between the two vertical rib plates, this cavity and other voids inside the pier cavity were filled with concrete.

Four horizontal compression arms were welded to the 1½-inch-thick vertical rib plates inside the bridge pier. These compression arms were used to transfer the crash force from the simulated bridge pier to the instrumented transducer links that were attached to the braced column load frame. Each transducer link was supported by two compression arms. The centerline elevation of the transducer links coincided with the centerline elevation of the supporting pair of compression arms. The upper and lower transducer links were located 12 ft and 2 ft from the top of the concrete foundation, respectively. This concrete foundation was flush with the existing grade surface at the site. Each compression arm was approximately 10 ft 7¼ inches in length and consisted of a fabricated steel composite cross section comprised of three 1½-inch-thick steel plates of varying widths and a W8×48 steel section. The plates and steel section were welded together to form the composite steel section used for each compression arm. The steel plates and W8×48 shape used in the composite steel sections were fabricated using A572, Grade 50 material. Each compression arm was fabricated with a 7-inch-diameter hole on the free end to support an American Iron and Steel Institute (AISI) 4140 heat-strengthened steel pin 7 inches in diameter and 32 inches long. This pin was used to connect the transducer links and knuckles to the rigid column load frame.

Two instrumented transducer links were installed in the test installation to measure the impact forces from the large truck. The transducer links were fabricated from 12-inch-diameter AISI 4140 heat-strengthened steel. The links were 64½ inches in length and 11 inches in diameter on the ends. The middle section of each transducer link (21 inches in length) was machined to a diameter of 5½ inches. Strain gauges were mounted in the center of each link to measure the tension forces applied to the transducer link from the truck impact on the simulated

pier. A transducer knuckle was attached to each end of the transducer link using 4-inch-diameter AISI 4140 steel pins. These pins and knuckles permitted some rotational movement in the ends of the transducer links. On the impact side of each transducer link, the transducer knuckle was attached to the column load frame by a welded steel transducer mounting bracket. This mounting bracket was attached to the W14×398 column using four Grade 8 bolts 2¼ inches in diameter and 24 inches in length. The connecting knuckles attached to the opposite ends of the transducer links were attached to the compression arms. The connecting pins connecting the knuckles to the compression arms were 7 inches in diameter. All pins were fabricated from AISI 4140 heat-strengthened material.

The rigid column support frame consisted of a segment of W14×398 section 24 ft in length and anchored 10 ft into a concrete foundation. The W14×298 was reinforced with 1½-inch-thick side plates that were welded between the flanges and on each side of the W14×398. These side plates were 12 ft in length and were used to reinforce the W14×398 in the immediate area around the lower transducer knuckle connection. The W14×398 was braced to a shorter vertical support member located 12 ft from the W14×398 column support. This shorter vertical member consisted of a segment of W14×176 section 10 ft in length and anchored 6 ft 10 inches into the concrete foundation. This W14×176 vertical support was used to brace the W14×398 column using an HSS14×14×5/8 section. All W-shape and flat plate used to fabricate the load frame met the requirements of A572 Grade 50 material. The material used to fabricate the HSS 14×14×5/8 brace met the requirements of A500 Grade B material.

Drilled shafts were used to support the braced column load frame. The W14×398 column and the W14×176 vertical brace support were anchored into 48-inch-diameter drilled shafts that extended 20 ft below grade. Reinforcement in the drilled shafts consisted of 24 #8 bars equally spaced inside #4 circular stirrups. The circular stirrups were located on 12-inch centers in the drilled shafts. A concrete mat foundation was constructed around the drilled shafts to provide additional support for the simulated bridge pier. The concrete mat was 8 ft wide and 22 ft in length. Reinforcement in the mat consisted of three layers of reinforcement. Two layers were located in the top and bottom of the 36-inch-thick concrete mat with the third layer of reinforcement located approximately 8 inches from the top of the mat. The specified compressive strength of the concrete was 5000 psi. The specified minimum yield strength of all the reinforcing steel used for this project was 60 ksi. For additional information, please refer to Appendix D in this report.

ELECTRONIC INSTRUMENTATION AND DATA PROCESSING

The test vehicle was not instrumented. Details of the instrumentation on the bridge pier are as follows.

Two sets of full Wheatstone bridge strain gauges were bonded to the upper and lower 1-million-lb-capacity load cells. Each of the bridges used four 350-ohm strain gauges, two in tension/compression and two Poisson gauges. These were configured to cancel bending and temperature effects while achieving approximately 2.6 active gauges. The two full bridges were placed on each load cell approximately 2 inches apart to effectively produce the same separate

and independent strain readings to provide redundancy. Prior to installation, each bridge on each load cell was calibrated, in tension, by a precision MTS load frame to produce a force/strain curve to be used to calibrate the data systems.

Each top and bottom load cell bridge was connected to two completely independent data acquisition systems. The first system was a self-contained, crash-test data processor/recorder produced by Diversified Technology Systems referred to as a Tiny Data Acquisition System (TDAS). The TDAS was connected to the load cells by means of 150-ft-long instrumentation cables. A pressure trigger switch was also connected to the TDAS and taped to the front of the pier to start the recording. Once started, the TDAS recorded each channel at 10,000 readings per second where each reading has a resolution of 1 part in 65,536. The data were recorded for several seconds to the end of the impact. Once collected, the data were downloaded into a laptop computer with each line displaying the time, upper load cell, and lower load cell force.

The second data acquisition system consisted of a bank of Vishay 2100 strain amplifiers to increase the signal level from millivolts to volts and provide calibration circuits. The output of the Vishay 2100 strain amplifiers fed into an IOTech DaqBook 2020 and then into a laptop computer running IOTech DaqView software. Recording to the hard drive commenced when the test vehicle activated a second pressure switch on the pier. Data on this system were recorded at 5000 readings per second for several seconds after impact.

PHOTOGRAPHIC INSTRUMENTATION AND DATA PROCESSING

Photographic coverage of the test included two high-speed cameras: one placed behind the installation at an angle and a second placed to have a field of view perpendicular with the installation/vehicle path. A flash bulb activated by pressure-sensitive tape switches was positioned on the impacting vehicle to indicate the instant of contact with the installation and was visible from each camera. The films from these high-speed cameras were analyzed on a computer-linked Motion Analyzer to observe phenomena occurring during the collision and to obtain time-event, displacement, and angular data. A mini-DV and still cameras were used to record and document conditions of the test vehicle and installation before and after the test.

TEST VEHICLE PROPULSION AND GUIDANCE

The test vehicle was guided into the test installation using a remote control steering system. The vehicle was operated under its own power with a push vehicle aiding in initial acceleration. Steering and other necessary control functions were accomplished through onboard equipment remotely controlled from a chase vehicle. A painted stripe was used to aid the driver in achieving the intended impact condition. A speed controller was installed on the test vehicle engine and pre-set at the intended impact speed. The vehicle remained freewheeling, i.e., no steering or braking inputs.

APPENDIX B. RESULTS FOR TEST NO. 429730-2

TEST VEHICLE

A 2001 Freightliner FLD tractor and 1983 Utility van trailer, shown in Figures B1 and B2, were used for the crash test. The test inertia weight of the vehicle was 36,160 lb, and its gross static weight was 79,640 lb. Ballast consisted of bags of sand on pallets distributed throughout the length of the trailer. Total ballast weight was 43,480 lb. The height to the lower edge of the vehicle bumper was 17.25 inches, and it was 31.00 inches to the upper edge of the bumper. Figure B3 gives additional dimensions and information on the vehicle. The vehicle was directed into the installation using a remote control guidance system, and was released to be free-wheeling and unrestrained just prior to impact.

WEATHER CONDITIONS

The test was performed on the afternoon of December 21, 2009. Weather conditions at the time of testing were as follows: wind speed: 9 mi/h; wind direction: 188 degrees with respect to the vehicle (vehicle was traveling in a northerly direction); temperature: 65°F; and relative humidity: 44 percent.

TEST DESCRIPTION

The 2001 Freightliner FLD tractor and 1983 Utility van trailer, traveling at an impact speed of 48.4 mi/h, impacted the instrumented pier with the centerline of the vehicle aligned with the centerline of the pier. At 0.020 sec after impact, the front of the engine compartment contacted the pier; by 0.125 sec, the cab stopped forward motion, but the frame continued around the pier. The front of the trailer contacted the rear of the cab at 0.187 sec, and the trailer contacted the bridge pier at 0.393 sec. Forward motion of the trailer ceased at 0.452 sec. Figure B4 shows sequential photographs of the test period.

DAMAGE TO TEST INSTALLATION

No apparent structural damage was sustained by the instrumented bridge pier. The damage was only cosmetic in nature, as shown in Figure B5.

VEHICLE DAMAGE

The vehicle sustained catastrophic damage, as shown in Figure B6.

BRIDGE PIER INSTRUMENTATION FORCES

Figures B7 and B8 present the force traces.

Figure B1. Vehicle/Installation Geometrics for Test No. 429730-2.

Figure B2. Vehicle before Test No. 429730-2.

Vehicle Inventory Number: 834 & 856

DATE: 2009-12-21 **TEST NO.:** 429730-2

TRACTOR

YEAR: 2001 MAKE: Freightliner MODEL: FLD

VIN No.: 1FUJAHAS21PH65957 ODOMETER: 554406

TRAILER

YEAR: 1983 MAKE: Utility MODEL: Van

VIN No.: 1UYVS2453DT874608

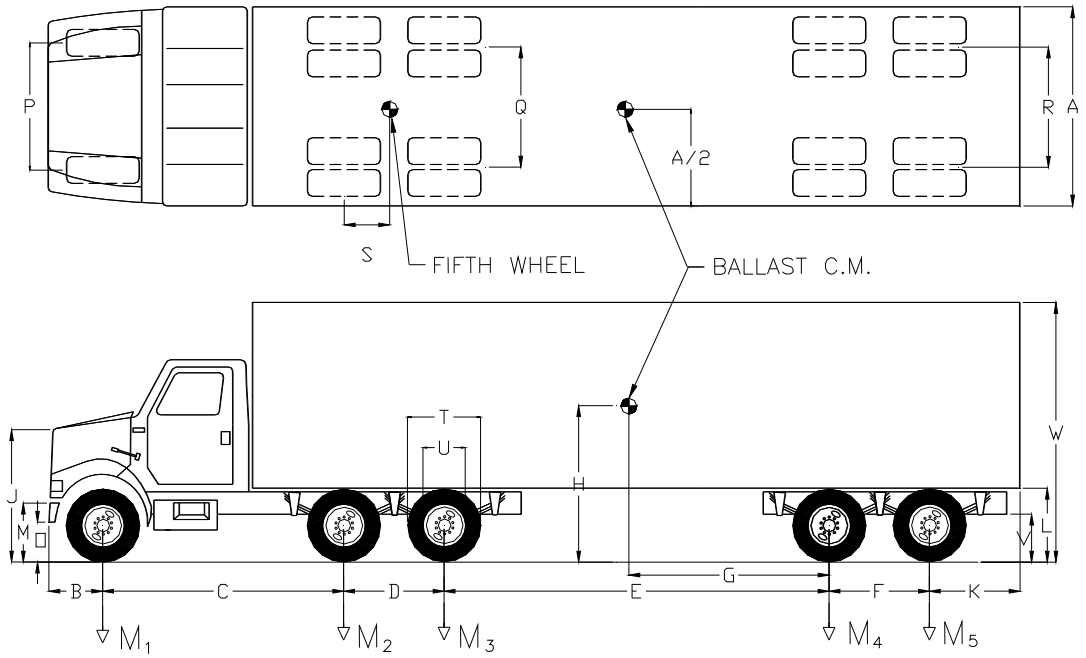

GEOMETRY (inches)

												S	26.00
A	96.00	D	51.00	G		K	67.00	N	0.75	Q	73.00	U	23.00
B	45.00	E	356.00	H		L	52.00	O	17.25	R	71.00	V	36.50
C	208.00	F	49.00	J	73.25	M	31.00	P	80.25	T	41.00	W	153.00

Allowable Range: C = 200 inches max.; L = 52 ±2 inches; Overall Trailer Length = 600 inches max.; Overall Combination Length = 780 inches max.; Trailer Overhang = 87 inches max.; Ballast Center of Mass Ht. = 73 ±2 inches above ground

MASS (lb)	CURB		TEST INERTIAL	
M_1	8780		8930	
M_2	7410		18840	
M_3	7490		17020	
M_4	6750		17930	
M_5	5730	Allowable Range	16920	Allowable Range
M_{Total}	36,160	29,000 ±3100 lb	79,640	79,300 ±1100 lb

Figure B3. Properties for the Vehicle for Test No. 429730-2.

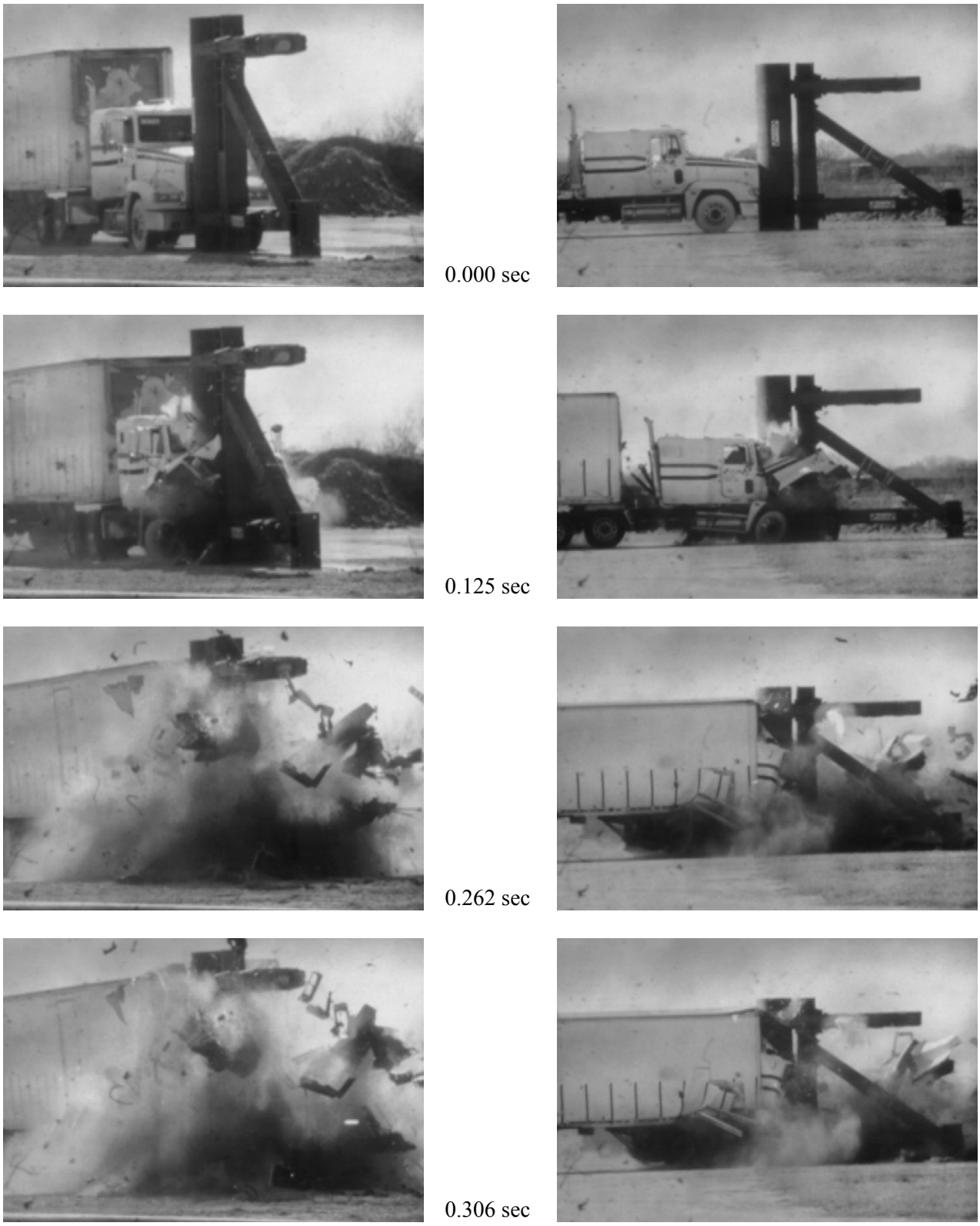

Figure B4. Sequential Photographs for Test No. 429730-2 (Oblique and Perpendicular Views).

Figure B5. Installation after Test No. 429730-2.

Figure B6. Vehicle after Test No. 429730-2.

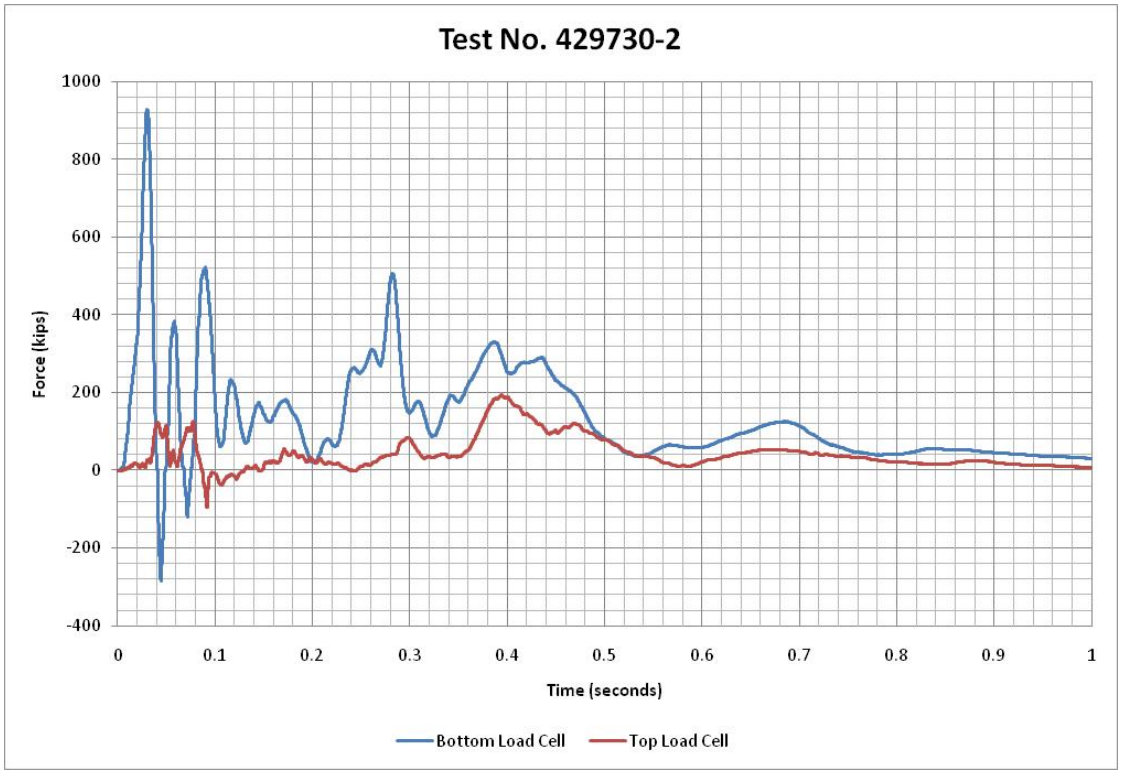

Figure B7. Top and Bottom Forces for Test No. 429730-2.

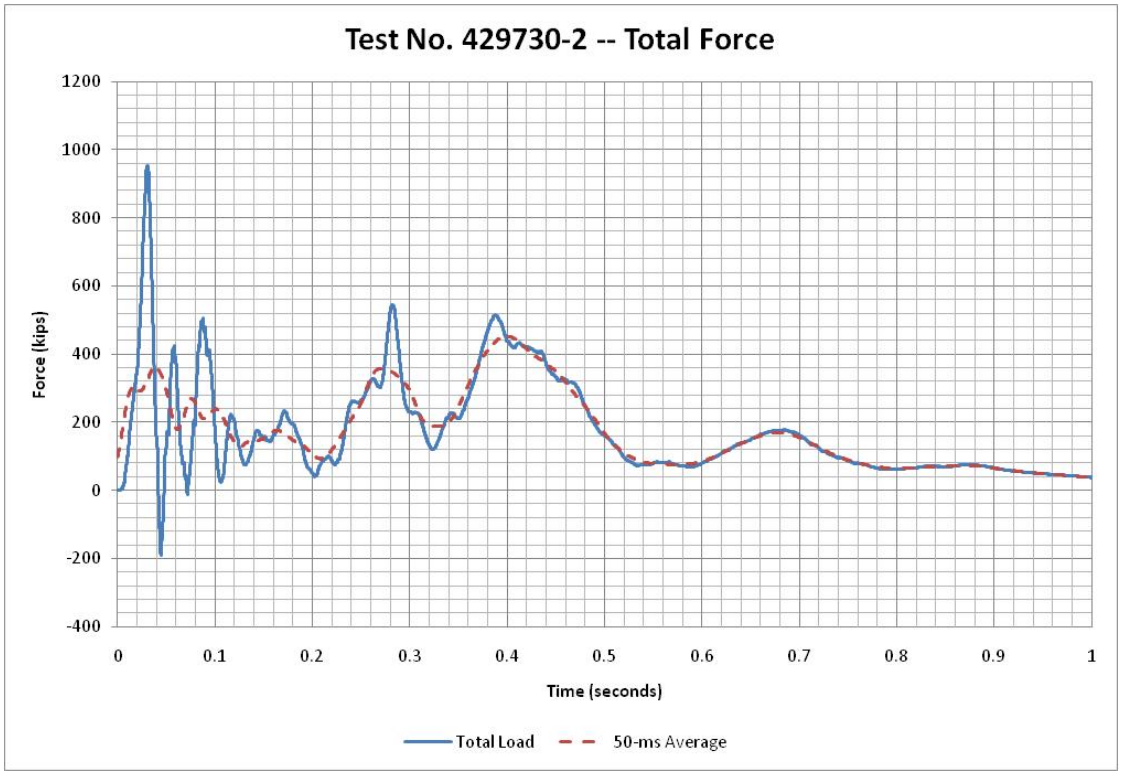

Figure B8. Total Force and Total 50-ms Average Force for Test No. 429730-2.

APPENDIX C. RESULTS FOR TEST NO. 429730-1

TEST VEHICLE

A 2001 Freightliner FLD tractor and 1979 Bud van trailer, shown in Figures C1 and C2, were used for the crash test. Test inertia weight of the vehicle was 31,030 lb, and its gross static weight was 79,520 lb. Ballast consisted of bags of sand on pallets distributed throughout the length of the trailer. Total ballast weight was 43,480 lb. The height to the lower edge of the vehicle bumper was 17.25 inches, and it was 31.00 inches to the upper edge of the bumper. Figure C3 gives additional dimensions and information on the vehicle. The vehicle was directed into the installation using a remote control guidance system, and was released to be free-wheeling and unrestrained just prior to impact.

WEATHER CONDITIONS

The test was performed on the afternoon of November 9, 2009. Weather conditions at the time of testing were as follows: wind speed: 2.5 mi/h; wind direction: 145 degrees with respect to the vehicle (vehicle was traveling in a northerly direction); temperature: 72°F; and relative humidity: 55 percent.

TEST DESCRIPTION

The 2001 Freightliner FLD tractor and 1979 Bud van trailer, traveling at an impact speed of 50.1 mi/h, impacted the instrumented bridge pier with the right quarter point of the vehicle aligned with the centerline of the pier. At 0.017 sec after impact, the front of the engine compartment contacted the pier, and by 0.262 sec, the cab went completely around the pier. The right forward rear wheel of the tractor contacted the pier at 0.277 sec, and the front of the trailer contacted the pier at 0.306 sec. At 0.316 sec, the right rearward rear tire contacted the pier, and by 1.375 sec, forward motion of the trailer ceased. Figure C4 shows sequential photographs of the test period.

DAMAGE TO TEST INSTALLATION

No apparent structural damage was sustained by the instrumented bridge pier. The damage was only cosmetic in nature, as shown in Figure C5.

VEHICLE DAMAGE

The vehicle sustained catastrophic damage, as shown in Figure C6.

BRIDGE PIER INSTRUMENTATION FORCES

Figures C7 and C8 present the force traces.

Figure C1. Vehicle/Installation Geometrics for Test No. 429730-1.

Figure C2. Vehicle before Test No. 429730-1.

Vehicle Inventory Number: 835 & 522

DATE: 2009-11-09 **TEST NO.:** 429730-1

TRACTOR

YEAR: 2001 MAKE: Freightliner MODEL: FLD

VIN No.: 1FUJAHAS41PH65958 ODOMETER: 559999

TRAILER

YEAR: 1979 MAKE: Bud MODEL: Van

VIN No.: 147082M

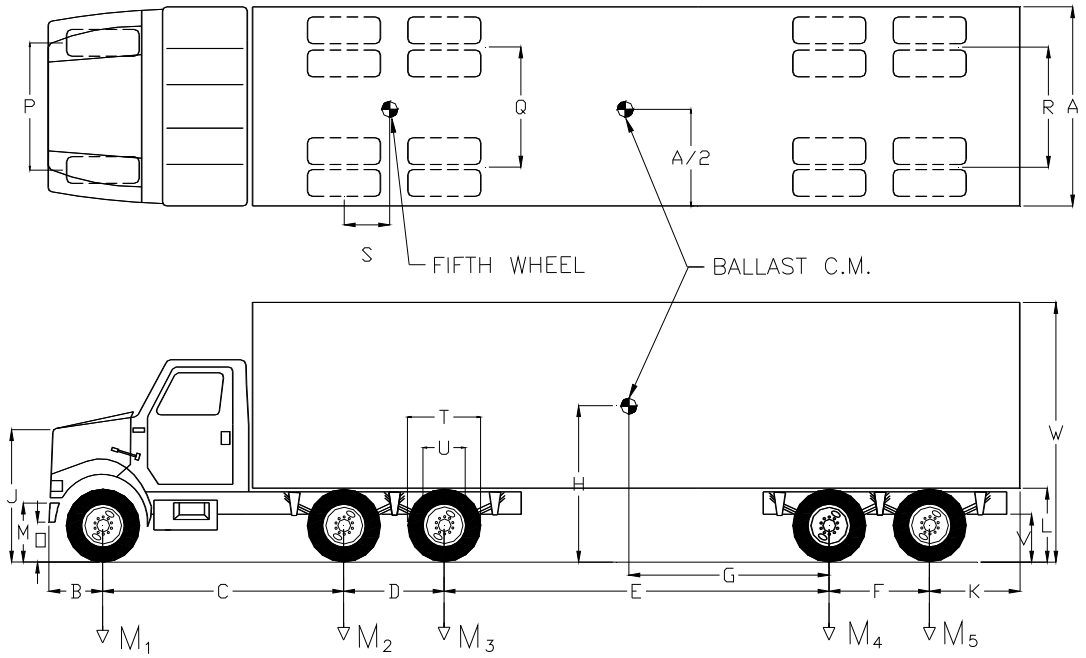

GEOMETRY (inches)

												S	25.00
A	97.00	D	51.00	G		K	51.00	N	0.75	Q	73.00	U	23.00
B	45.00	E	379.00	H		L	50.75	O	17.25	R	72.00	V	33.00
C	208.00	F	48.00	J	73.25	M	31.00	P	80.25	T	41.00	W	152.25

Allowable Range: C = 200 inches max.; L = 52 ±2 inches; Overall Trailer Length = 600 inches max.; Overall Combination Length = 780 inches max.; Trailer Overhang = 87 inches max.; Ballast Center of Mass Ht. = 73 ±2 inches above ground

MASS (lb)	CURB		TEST INERTIAL	
M_1	8800		8910	
M_2	5970		18940	
M_3	6420		18050	
M_4	5720		17210	
M_5	4120	Allowable Range	16410	Allowable Range
M_{Total}	31,030	29,000 ±3100 lb	79520	79,300 ±1100 lb

Figure C3. Properties for the Vehicle for Test No. 429730-1.

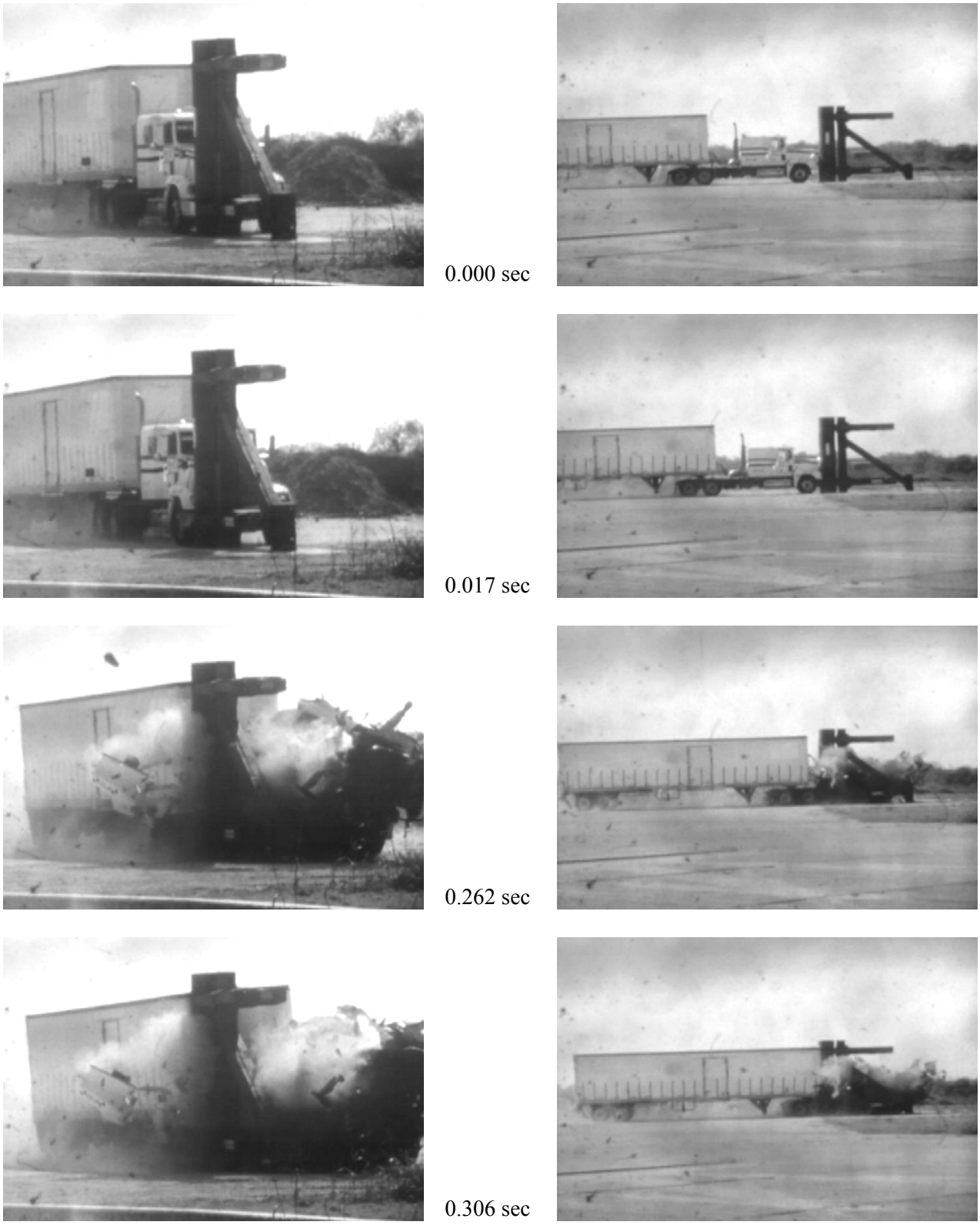

Figure C4. Sequential Photographs for Test No. 429730-1 (Oblique and Perpendicular Views).

Figure C5. Installation after Test No. 429730-1.

Figure C6. Vehicle after Test No. 429730-1.

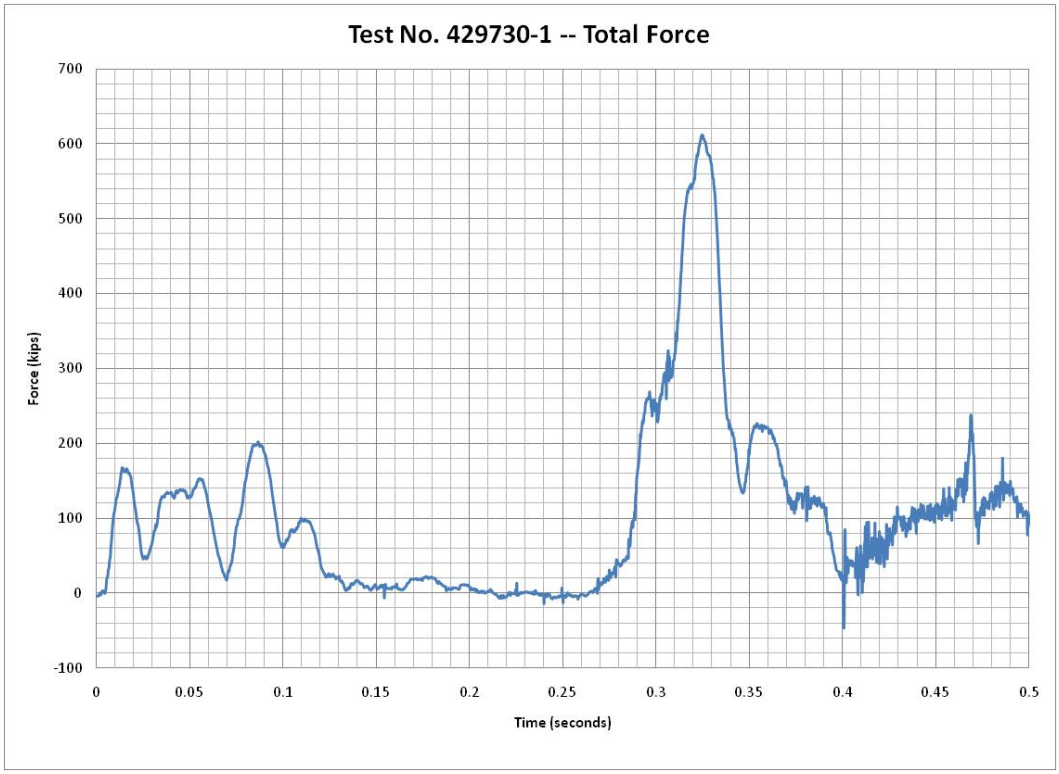

Figure C7. Top and Bottom Forces for Test No. 429730-1.

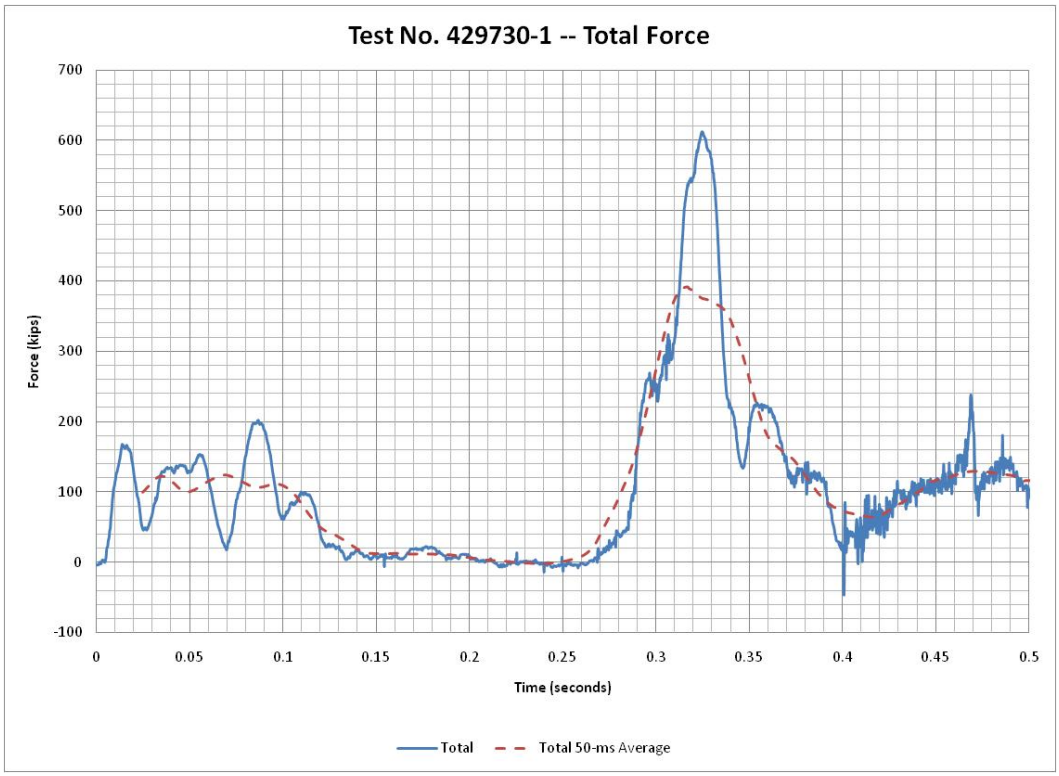

Figure C8. Total and Total 50-ms Average Force for Test No. 429730-1.

APPENDIX D. DESIGN OF INSTRUMENTED BRIDGE PIER

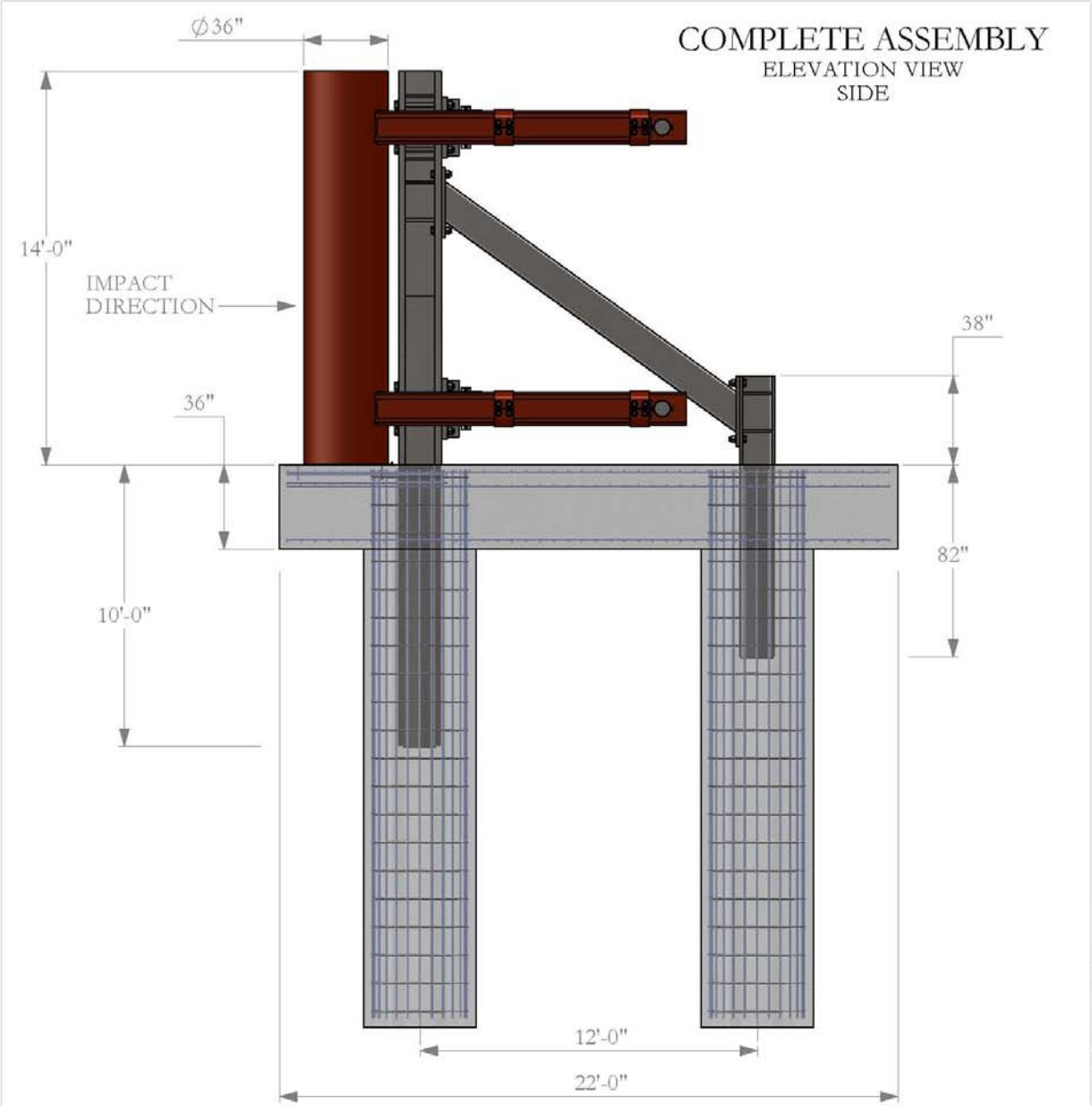

The Texas A&M University System

Texas Transportation Institute
College Station, Texas, 77843

Revisions:							
No.	Date	By	Chk	Date	Drawn By	Scale	Sheet No.
1.				2009-06-22	GES	1:60	1 of 32
2.							
3.				Project No.	Complete Assembly		
4.				429739 TxDOT			
5.				TxDOT Bridge Pier			

Approved: William Williams: Signature: William Williams Date: 2009-06-22

T:\2008-2009\429739 TxDOT Bridge Pier\SolidWorks\Drawings\Full Set

1. ALL TOLERANCES +/- 1/16" UNLESS OTHERWISE INDICATED.
2. GEORGETOWN SUPERFLEX - COMPACTED TO 95% OF STANDARD PROCTOR DENSITY.

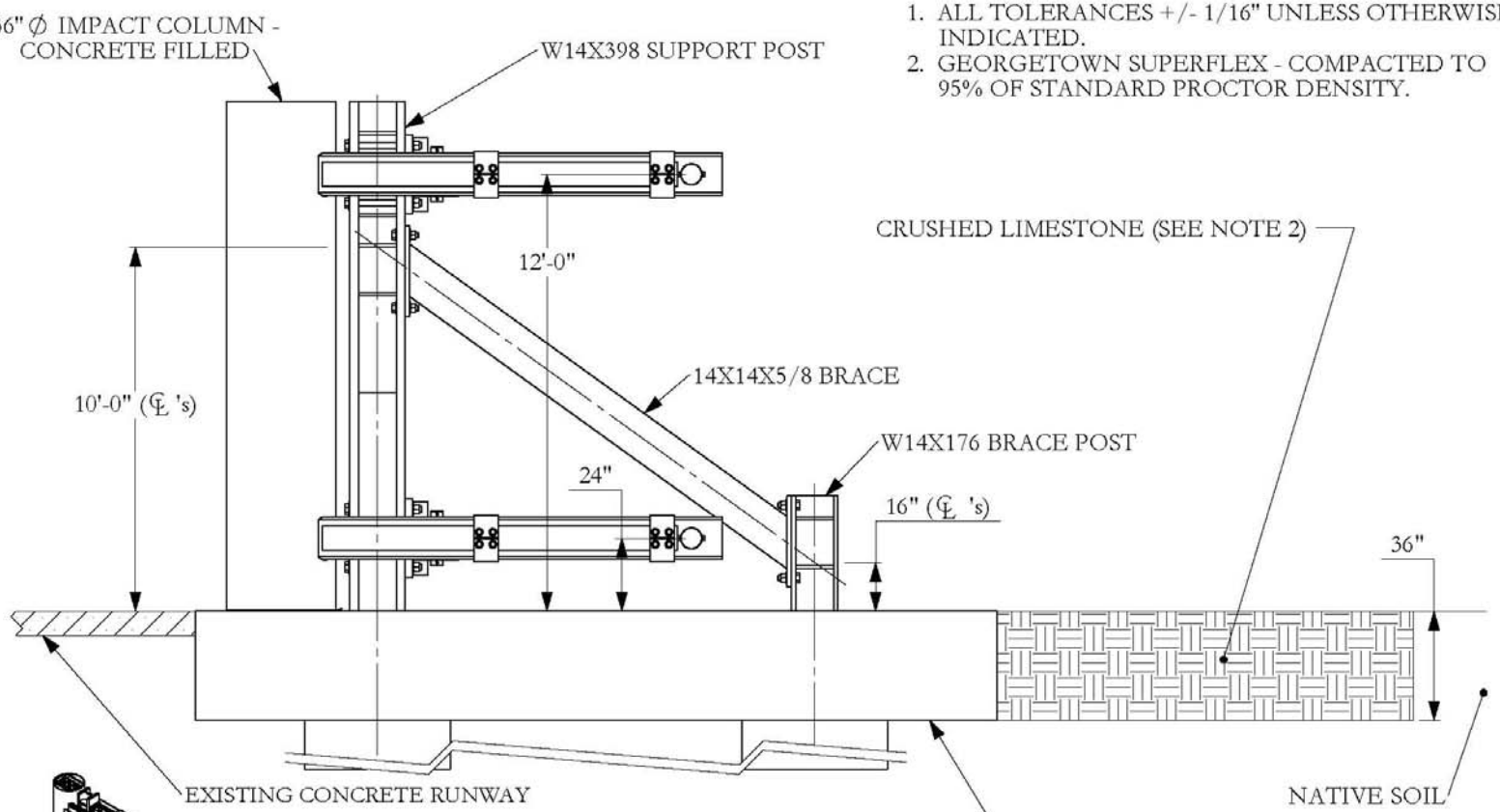

COMPLETE ASSEMBLY
ELEVATION VIEW
SIDE

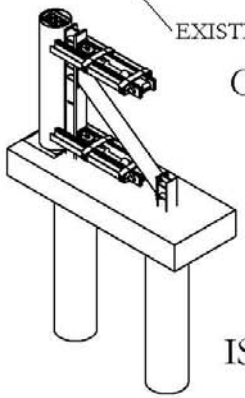

ISOMETRIC VIEW
SCALE 1:175

The Texas A&M University System							
Revisions:				Texas Transportation Institute College Station, Texas, 77843			
No.	Date	By	Chk	Date	Drawn By	Scale	Sheet No.
1.				2009-06-22	GES	1:50	2 of 32
2.							
3.				Project No.	Complete Assembly - Elevation		
4.				429739 TxDOT			
5.				TxDOT Bridge Pier			

T:\2008-2009\429739 TxDOT Bridge Pier\SolidWorks\Drawings\Full Set

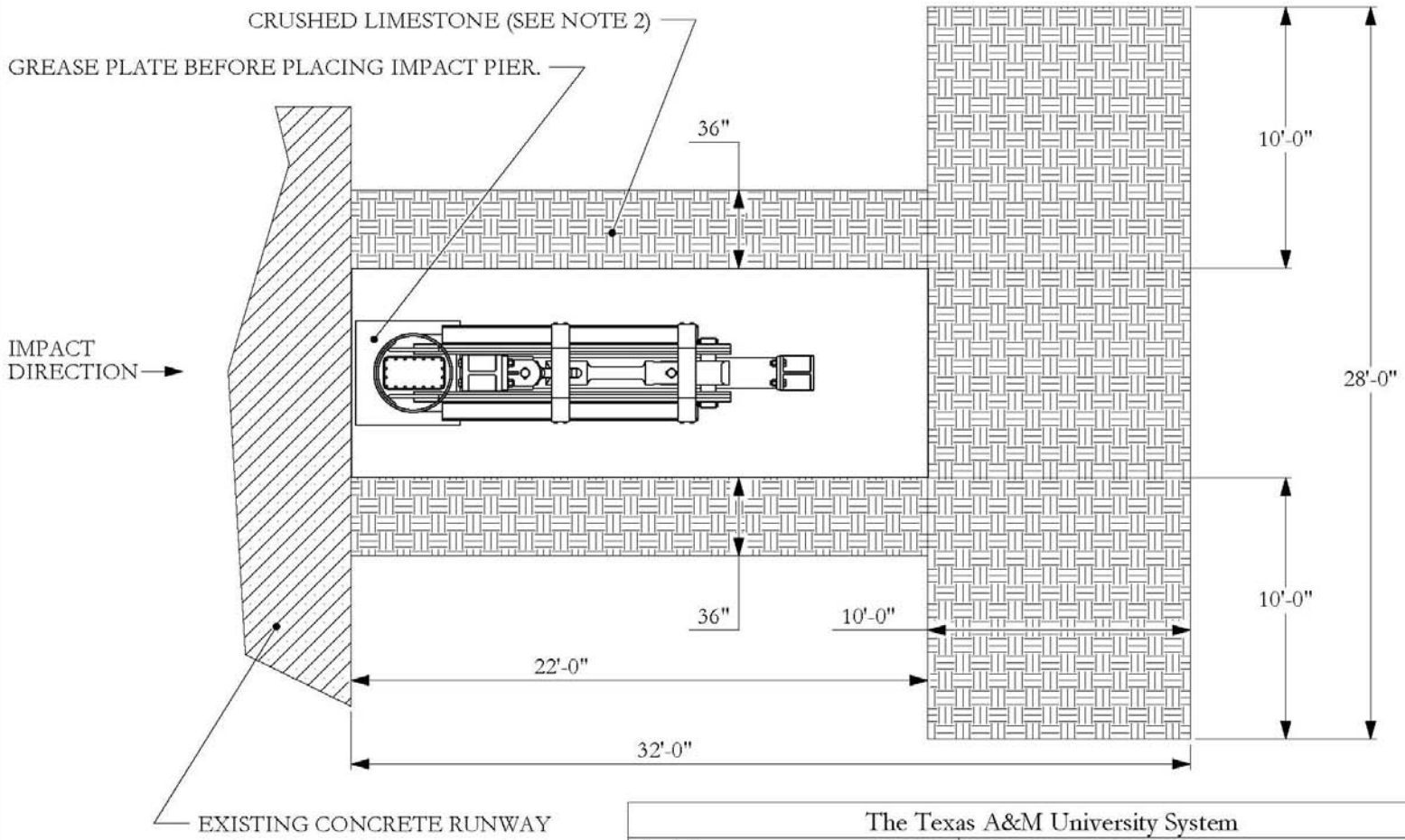

COMPLETE ASSEMBLY
PLAN VIEW

1. CRUSHED LIMESTONE DIMENSIONS ARE MINIMUMS.
2. GEORGETOWN SUPERFLEX - COMPACTED TO 65% OF STANDARD PROCTOR DENSITY.

Revisions:			
No.	Date	By	Chk
1.			
2.			
3.			
4.			
5.			

The Texas A&M University System

Texas Transportation Institute
College Station, Texas, 77843

Date	Drawn By	Scale	Sheet No.
2009-06-22	GES	1:65	3 of 32

Project No. 429739 TxDOT

Complete Assembly - Plan

TxDOT Bridge Pier

T:\2008-2009\429739 TxDOT Bridge Pier\SolidWorks\Drawings\Full Set

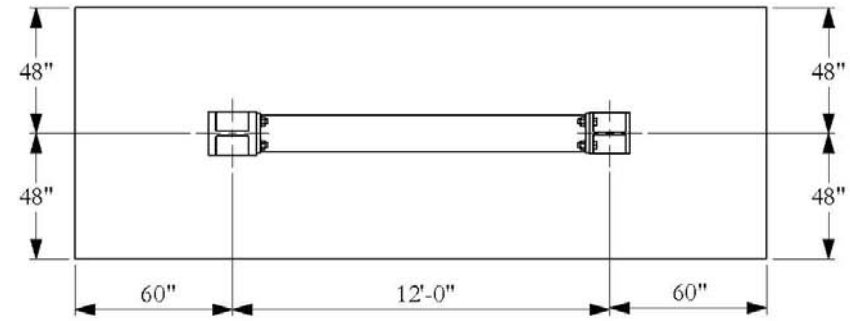

PLAN VIEW

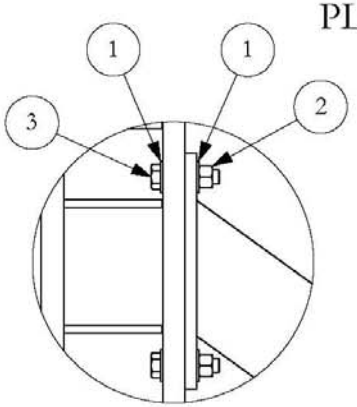

DETAIL A
SCALE 1 : 20

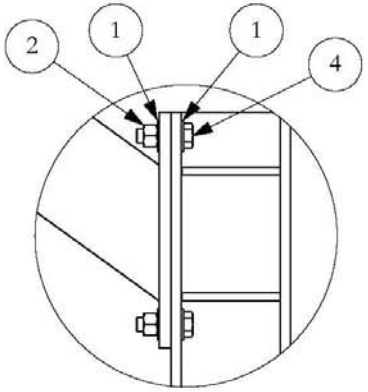

DETAIL B
SCALE 1 : 20

SUPPORT FRAME WITH CONCRETE

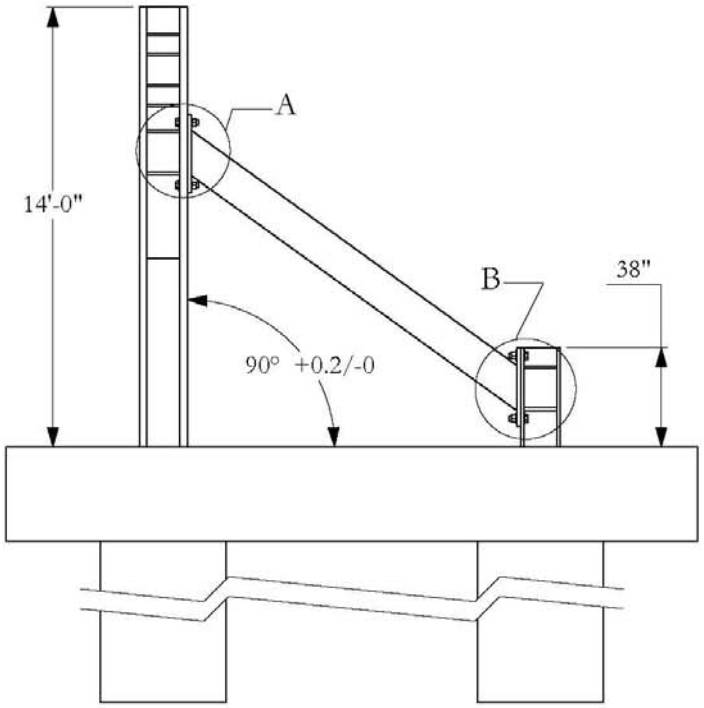

ELEVATION VIEW
SIDE

BRACE CONNECTION PARTS

#	PART NAME	NEED
1	Washer, flat 1 3/4" Gr. 8	16
2	Nut 1 3/4"-5 Gr. 8	8
3	Bolt, 1 3/4" -5 x 7 1/2" Gr. 8	4
4	Bolt, 1 3/4" -5 x 6" Gr. 8	4

The Texas A&M University System

Revisions:

No.	Date	By	Chk
1.			
2.			
3.			
4.			
5.			

Texas Transportation Institute
College Station, Texas, 77843

Date	Drawn By	Scale	Sheet No.
2009-06-22	GES	1:60	4 of 32

Project No.	Support Frame w/ Concrete
429739 TxDOT	

TxDOT Bridge Pier

T:\2008-2009\429739 TxDOT Bridge Pier\SolidWorks\Drawings\Full Set

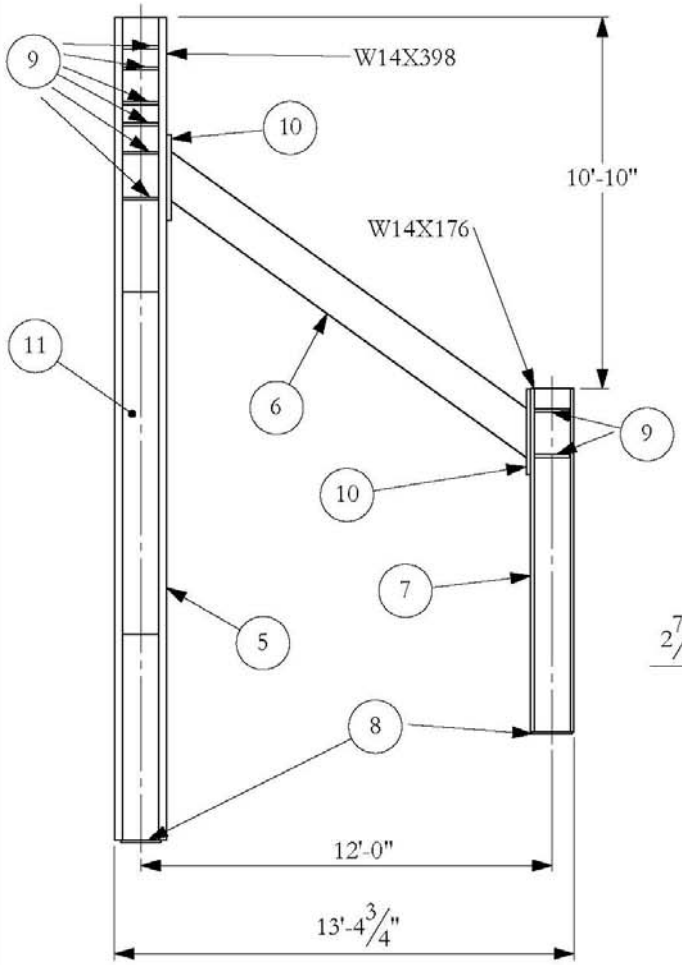

SUPPORT FRAME
ELEVATION VIEW

SUPPORT FRAME CUT LIST

#	PART NAME	NEED
5	Main Post, A572 Gr. 50 W14X398	1
6	Brace, A500 Gr. B HSS 14X14X5/8	1
7	Brace Post, A572 Gr. 50 W14X176	1
8	Bottom Plate, A572 Gr. 50 - 14" x 14" x 3/4"	2
9	Stiffener, A572 Gr. 50	16
10	Brace Plate, A572 Gr. 50 - 30" x 15" x 1 1/2"	2
11	Side Plate, A572 Gr. 50 - 10' x 12 1/2" x 1 1/2"	2

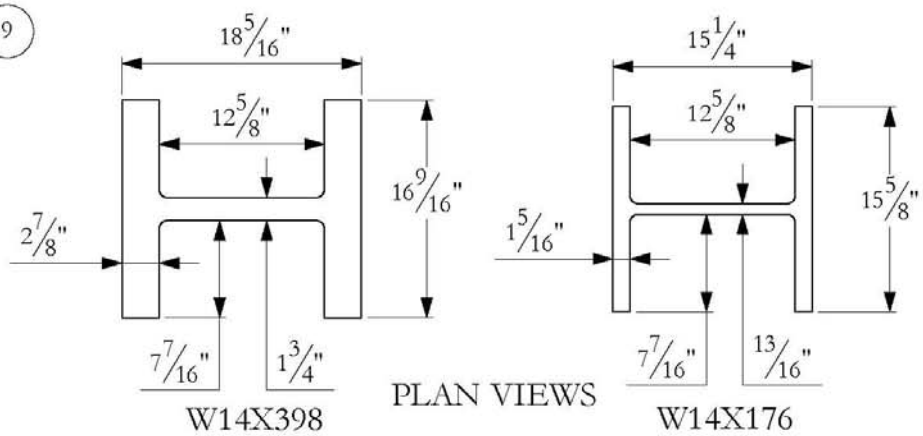

The Texas A&M University System							
Revisions:				Texas Transportation Institute College Station, Texas, 77843			
No.	Date	By	Chk				
1.	2009-09-01	GES	WW	Date	Drawn By	Scale	Sheet No.
2.	2009-09-08	GES	WW	2009-06-22	GES	1:55	5 of 32
3.				Project No.	Support Frame		
4.				429739 TxDOT			
5.				TxDOT Bridge Pier			

T:\2008-2009\429739 TxDOT Bridge Pier\SolidWorks\Drawings\Full Set

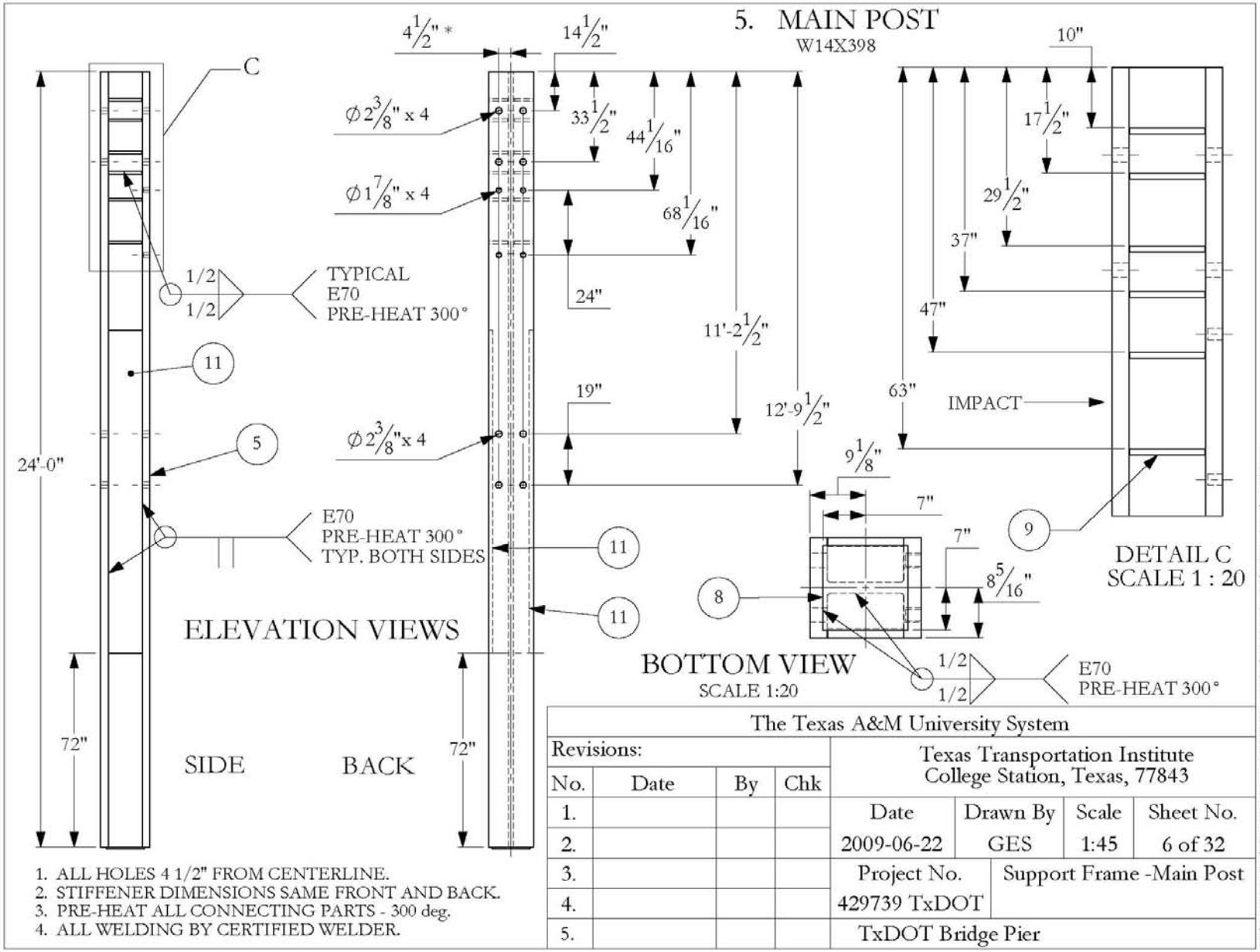
5. MAIN POST
W14X398
4 1/2" *
14 1/2"
C
Ø2 3/8" x 4
Ø1 7/8" x 4
Ø2 3/8"x 4
33 1/2"
44 1/16"
68 1/16"
24"
11'-2 1/2"
12'-9 1/2"
19"
24'-0"
1/2
1/2
TYPICAL
E70
PRE-HEAT 300°
E70
PRE-HEAT 300°
TYP. BOTH SIDES
11
5
11
11
ELEVATION VIEWS
72"
72"
SIDE
BACK
10"
17 1/2"
29 1/2"
37"
47"
63"
IMPACT
9
DETAIL C
SCALE 1 : 20
9 1/8"
7"
7"
8 5/16"
8
BOTTOM VIEW
SCALE 1:20
1/2
1/2
E70
PRE-HEAT 300°
1. ALL HOLES 4 1/2" FROM CENTERLINE.
2. STIFFENER DIMENSIONS SAME FRONT AND BACK.
3. PRE-HEAT ALL CONNECTING PARTS - 300 deg.
4. ALL WELDING BY CERTIFIED WELDER.
The Texas A&M University System
Revisions:
No. Date By Chk
1.
2.
3.
4.
5.
Texas Transportation Institute
College Station, Texas, 77843
Date
2009-06-22
Drawn By
GES
Scale
1:45
Sheet No.
6 of 32
Project No.
429739 TxDOT
Support Frame -Main Post
TxDOT Bridge Pier
T:\2008-2009\429739 TxDOT Bridge Pier\SolidWorks\Drawings\Full Set

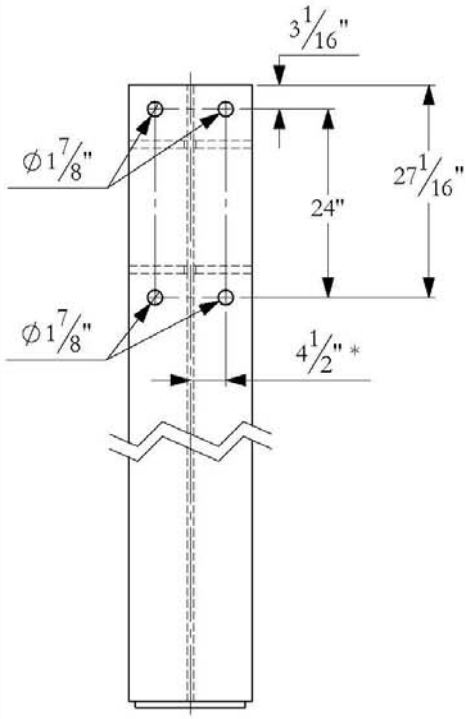

ELEVATION VIEW
FRONT

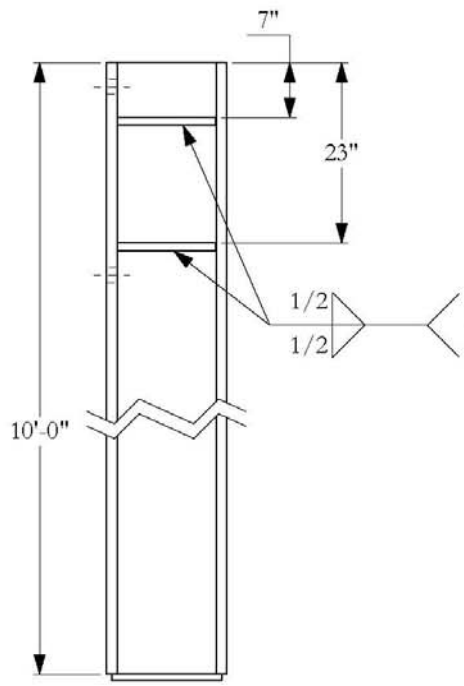

ELEVATION VIEW
SIDE

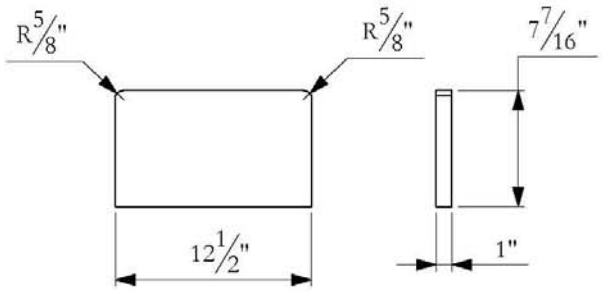

9. STIFFENER
A572 Gr. 50
SCALE 1:10

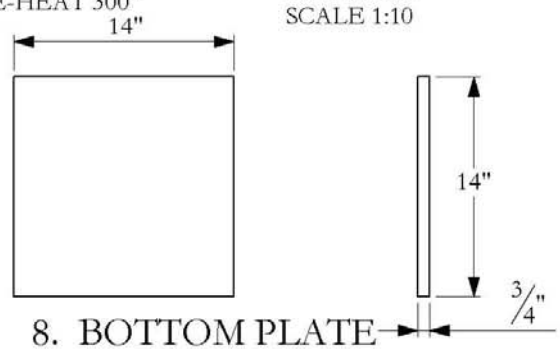

8. BOTTOM PLATE
A572 Gr. 50
SCALE 1:10

1. ALL HOLES IN BRACE POST 4 1/2" OFF CENTERLINE.
2. STIFFENER DIMENSIONS SAME FRONT AND BACK.
3. PRE-HEAT ALL CONNECTING PARTS - 300 deg.
4. ALL WELDING BY CERTIFIED WELDER.

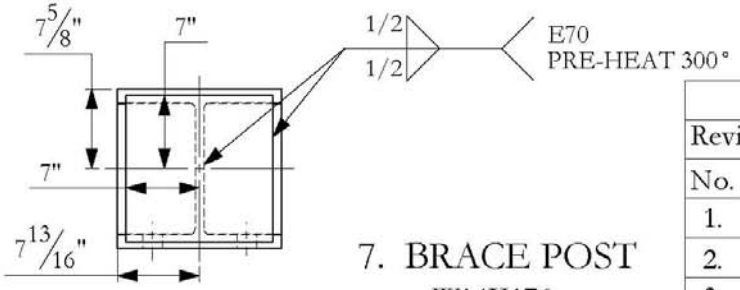

PLAN VIEW
BOTTOM
SCALE 1:15

7. BRACE POST
W14X176

The Texas A&M University System							
Revisions:				Texas Transportation Institute College Station, Texas, 77843			
No.	Date	By	Chk	Date	Drawn By	Scale	Sheet No.
1.				2009-06-22	GES	1:20	7 of 32
2.							
3.				Project No.	Support Frame - Brace Post Bottom Plate and Stiffener		
4.				429739 TxDOT			
5.				TxDOT Bridge Pier			

T:\2008-2009\429739 TxDOT Bridge Pier\SolidWorks\Drawings\Full Set

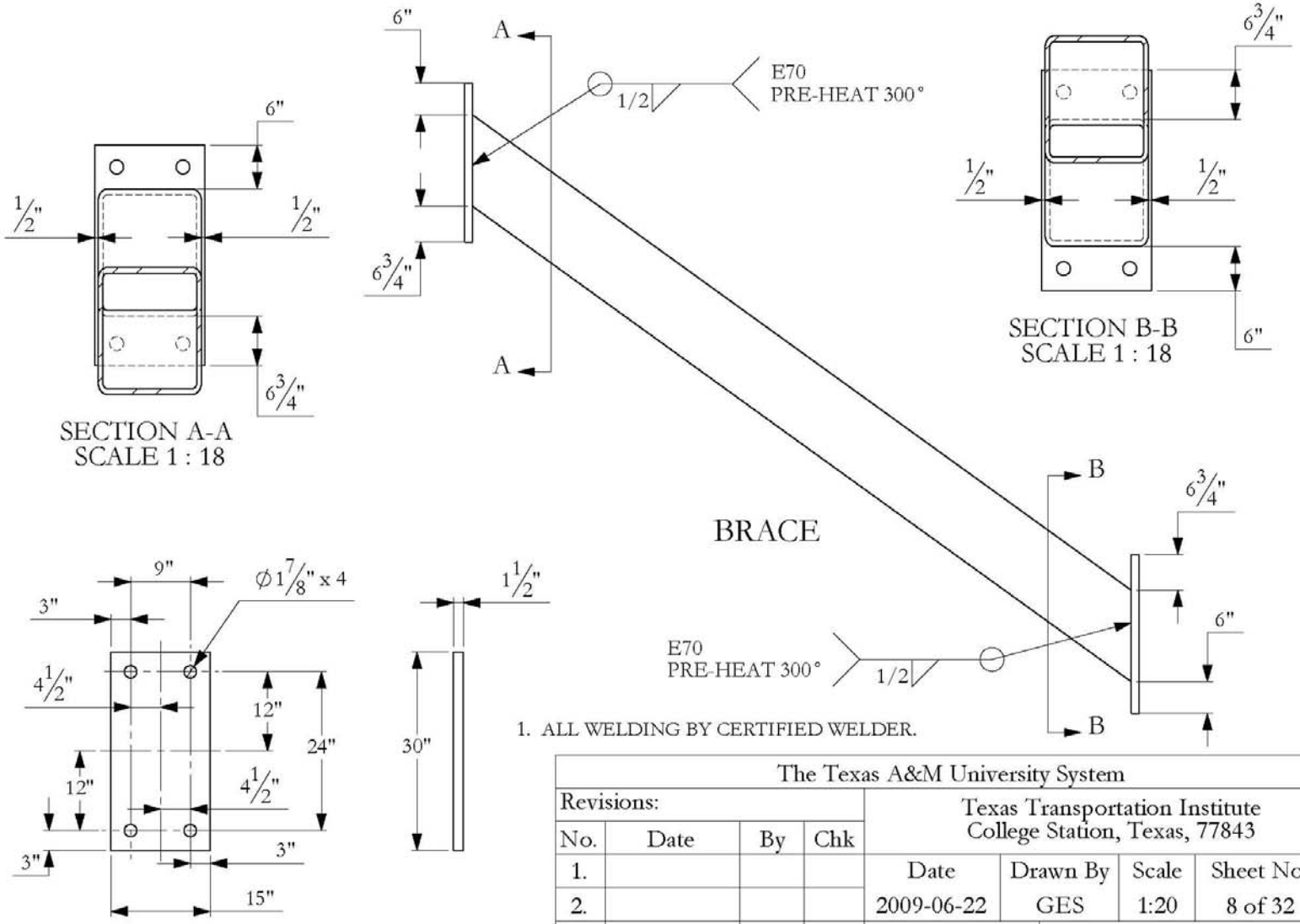
6"
1/2"
1/2"
6 3/4"
SECTION A-A
SCALE 1 : 18
6"
A
A
1/2
E70
PRE-HEAT 300°
6 3/4"
BRACE
6 3/4"
1/2"
1/2"
6"
SECTION B-B
SCALE 1 : 18
B
B
6 3/4"
6"
E70
PRE-HEAT 300°
1/2
9"
3"
Ø1 7/8" x 4
4 1/2"
12"
24"
12"
4 1/2"
3"
3"
15"
1 1/2"
30"
10. BRACE PLATE
A572 Gr. 50
1. ALL WELDING BY CERTIFIED WELDER.
The Texas A&M University System
Revisions:
No. Date By Chk
1.
2.
3.
4.
5.
Texas Transportation Institute
College Station, Texas, 77843
Date
2009-06-22
Drawn By
GES
Scale
1:20
Sheet No.
8 of 32
Project No.
429739 TxDOT
Support Frame - Brace
TxDOT Bridge Pier
T:\2008-2009\429739 TxDOT Bridge Pier\SolidWorks\Drawings\Full Set

6. TUBE

A500 Gr. B HSS 14X14X5/8

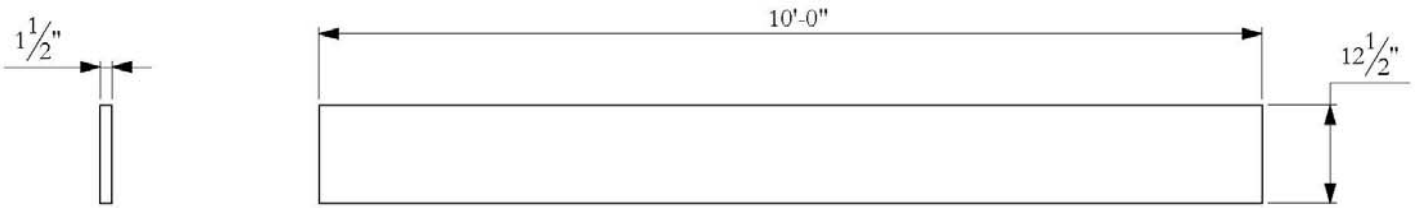

11. SIDE PLATE

A572 Gr. 50

The Texas A&M University System							
Revisions:				Texas Transportation Institute College Station, Texas, 77843			
No.	Date	By	Chk				
1.				Date	Drawn By	Scale	Sheet No.
2.				2009-06-22	GES	1:20	9 of 32
3.				Project No.	Tubing and Side Plate		
4.				429739 TxDOT			
5.				TxDOT Bridge Pier			

T:\2008-2009\429739 TxDOT Bridge Pier\SolidWorks\Drawings\Full Set

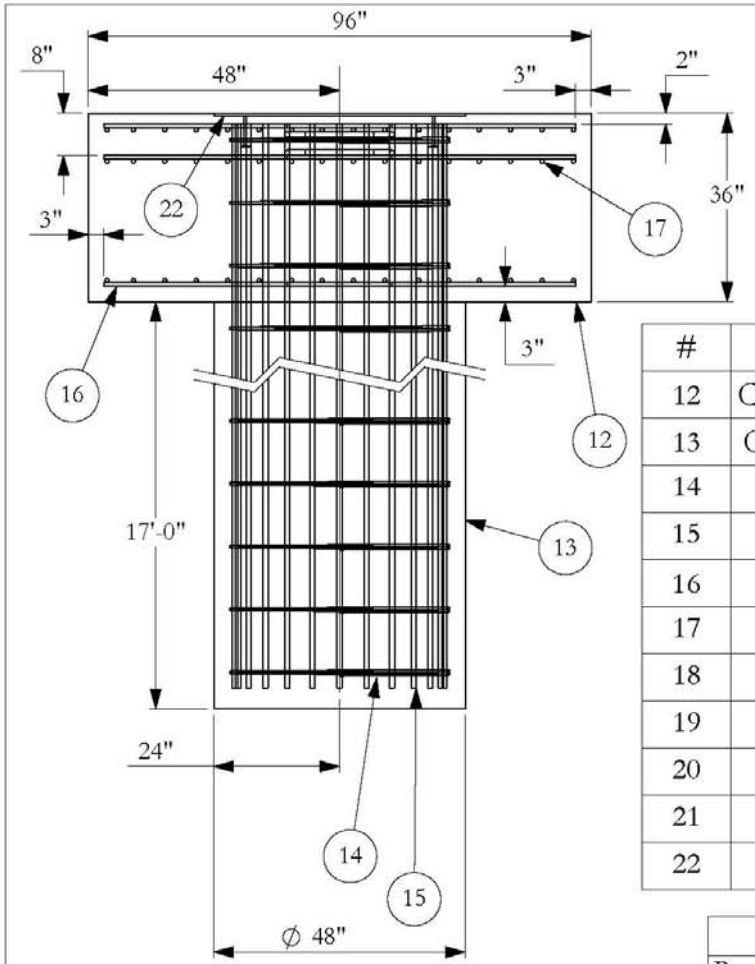

ELEVATION VIEW
END

1. REBAR CLEARANCE 2" AT TOP, ALL OTHERS 3".
2. REBAR SPACING +/- 1/2" EXCEPT TO AVOID REBAR IN COLUMNS.
3. CONCRETE STRENGTH - 5,000 PSI MINIMUM.
4. #22 PLATE - A36 STEEL
5. REBAR - GRADE 60
6. CONCRETE DIMENSIONS +/- 1/2"

FOUNDATION AND REBAR LIST

#	PART NAME	LOCATION	QTY.
12	Concrete Slab - 3' x 8' x 22'		1
13	Concrete Footer, 48" x 17'		2
14	Rebar Ring, #4 - 42" OD	20 each column, 12" spacing	40
15	Rebar, #8 x 19' 6"	24 each column, equal spacing	48
16	Rebar, #6 x 90"	transverse bars	114
17	Rebar, #6 x 21' 6"	longitudinal bars	42
18	Rebar, #6 x 44"	longitudinal bars, ends at posts	12
19	Rebar, #6 x 10'	longitudinal bars between posts	6
20	Rebar, #6 x 35"	transverse bars at posts	36
21	Rebar, #8 Stirrup	at Main Post	2
22	Plate, 48" x 48" x 1/2"	top of plate flush with concrete	1

The Texas A&M University System

Revisions:

No.	Date	By	Chk
1.	2009-07-08	GES	WW
2.			
3.			
4.			
5.			

Texas Transportation Institute
College Station, Texas, 77843

Date	Drawn By	Scale	Sheet No.
2009-06-22	GES	1:30	10 of 32

Project No. 429739 TxDOT

Concrete - End View
Concrete and Rebar

TxDOT Bridge Pier

T:\2008-2009\429739 TxDOT Bridge Pier\SolidWorks\Drawings\Full Set

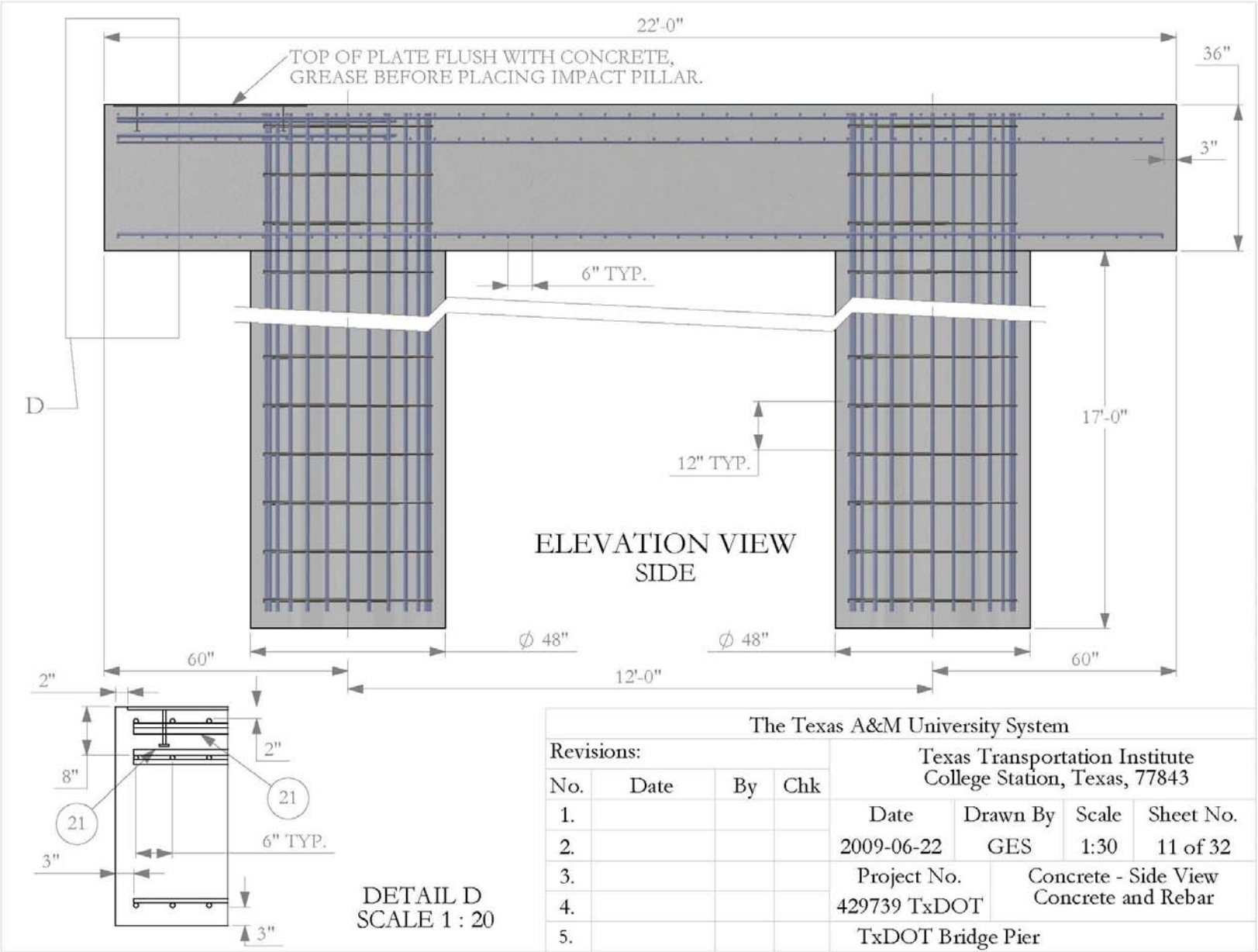
22'-0"
TOP OF PLATE FLUSH WITH CONCRETE,
GREASE BEFORE PLACING IMPACT PILLAR.
36"
3"
6" TYP.
D
17'-0"
12" TYP.
ELEVATION VIEW
SIDE
∅ 48"
∅ 48"
60"
60"
12'-0"
2"
2"
8"
21
21
6" TYP.
3"
3"
DETAIL D
SCALE 1 : 20
The Texas A&M University System
Revisions:
No. Date By Chk
1.
2.
3.
4.
5.
Texas Transportation Institute
College Station, Texas, 77843
Date
2009-06-22
Drawn By
GES
Scale
1:30
Sheet No.
11 of 32
Project No.
429739 TxDOT
Concrete - Side View
Concrete and Rebar
TxDOT Bridge Pier
T:\2008-2009\429739 TxDOT Bridge Pier\SolidWorks\Drawings\Full Set

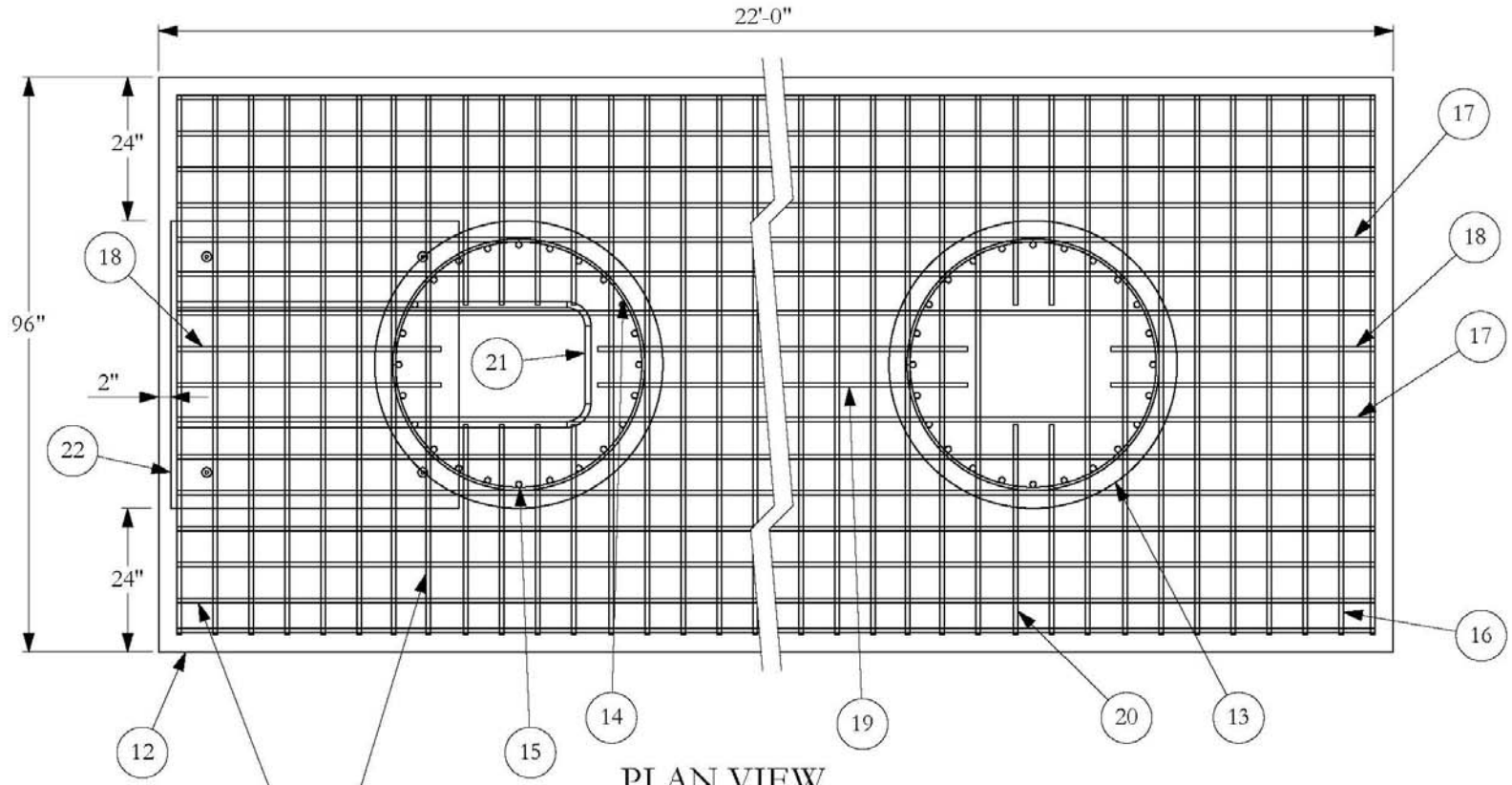

PLAN VIEW

#6 BARS,
6" SPACING EACH WAY,
ALL THREE MATS

The Texas A&M University System							
Revisions:				Texas Transportation Institute College Station, Texas, 77843			
No.	Date	By	Chk				
1.				Date	Drawn By	Scale	Sheet No.
2.				2009-06-22	GES	1:25	12 of 32
3.				Project No.	Concrete - Plan View Concrete and Rebar		
4.				429739 TxDOT			
5.				TxDOT Bridge Pier			

T:\2008-2009\429739 TxDOT Bridge Pier\SolidWorks\Drawings\Full Set

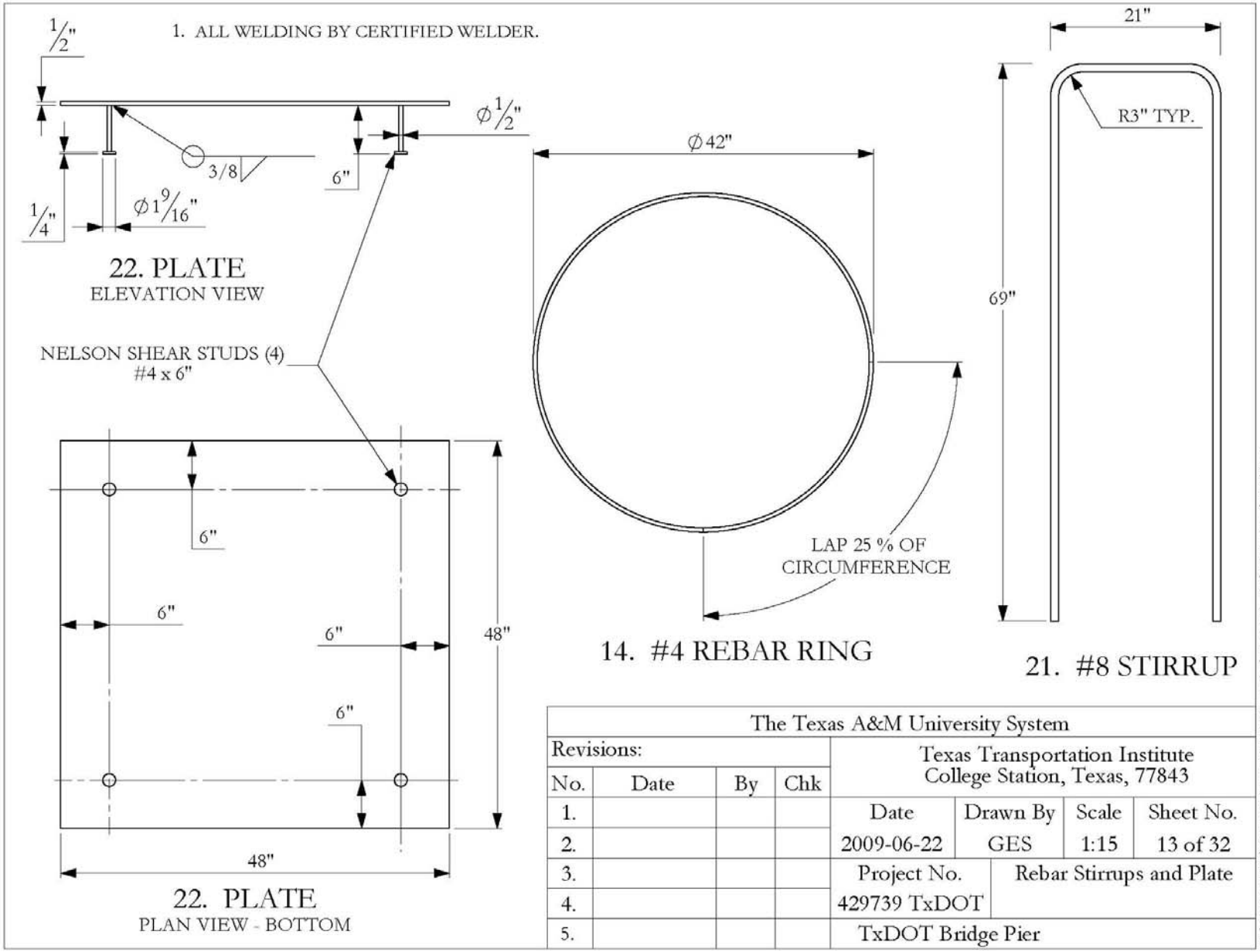
1. ALL WELDING BY CERTIFIED WELDER.
1/2"
3/8
6"
Ø1/2"
1/4"
Ø1 9/16"
22. PLATE
ELEVATION VIEW
NELSON SHEAR STUDS (4)
#4 x 6"
6"
6"
6"
6"
48"
48"
22. PLATE
PLAN VIEW - BOTTOM
Ø42"
LAP 25 % OF
CIRCUMFERENCE
14. #4 REBAR RING
21"
R3" TYP.
69"
21. #8 STIRRUP
The Texas A&M University System
Revisions:
No. Date By Chk
1.
2.
3.
4.
5.
Texas Transportation Institute
College Station, Texas, 77843
Date
2009-06-22
Drawn By
GES
Scale
1:15
Sheet No.
13 of 32
Project No.
429739 TxDOT
Rebar Stirrups and Plate
TxDOT Bridge Pier
T:\2008-2009\429739 TxDOT Bridge Pier\SolidWorks\Drawings\Full Set

TRANSDUCER ASSEMBLY
2 REQUIRED

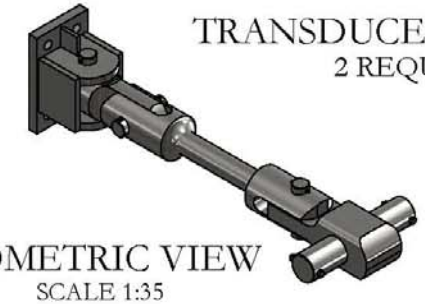

ISOMETRIC VIEW
SCALE 1:35

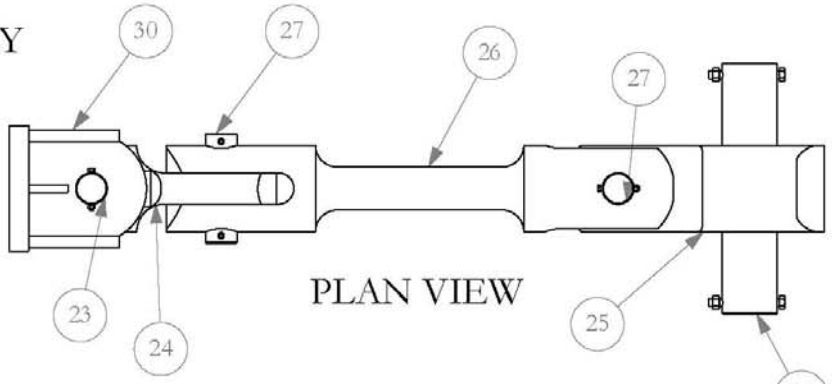

PLAN VIEW

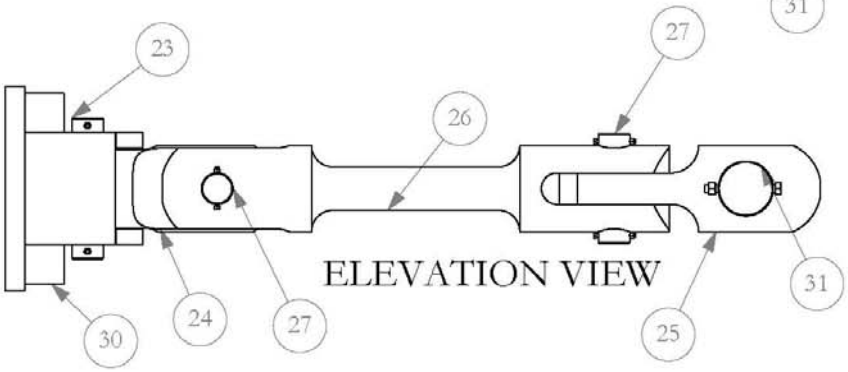

ELEVATION VIEW

TRANSDUCER ASSEMBLY PARTS

#	PART NAME	QTY.
23	Pin, ∅4" x 18"	2
24	Transducer Knuckle, a	2
25	Transducer Knuckle, b	2
26	Transducer Link	2
27	Pin, ∅4" x 14"	4
28	Bolt, .5 -13 x 4.5" Gr. 8	12
29	Nut, .5 -13	12
30	Transducer Mounting Bracket	2
31	Pin, ∅7" x 32"	2
32	Bolt, 1-8x9x2.5-N Gr. 8	4
33	Nut, 1" -8 Gr. 8	4
34	Bolt, 2 1/4" -4.5 x 24" Gr. 8	8
35	Washer, 2 1/4" flat Gr. 8	16
36	Nut, 2 1/4" -4.5 Gr. 8	8

1. TRANSDUCERS, TRANSDUCER KNUCKLES, AND ALL PINS WILL BE AISI 4140 STEEL. HEAT TREATED TO MINIMUM 100 KSI YIELD, 115 KSI ULTIMATE.

The Texas A&M University System

Texas Transportation Institute
College Station, Texas, 77843

Revisions:							
No.	Date	By	Chk	Date	Drawn By	Scale	Sheet No.
1.	2009-07-08	GES	WW	2009-06-22	GES	1:20	14 of 32
2.							
3.				Project No.	Transducer Assembly		
4.				429739 TxDOT			
5.				TxDOT Bridge Pier			

T:\2008-2009\429739 TxDOT Bridge Pier\SolidWorks\Drawings\Full Set

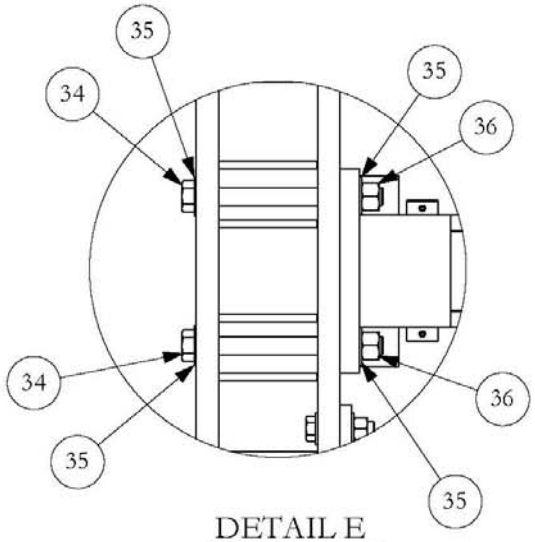

DETAIL E
SCALE 1 : 20

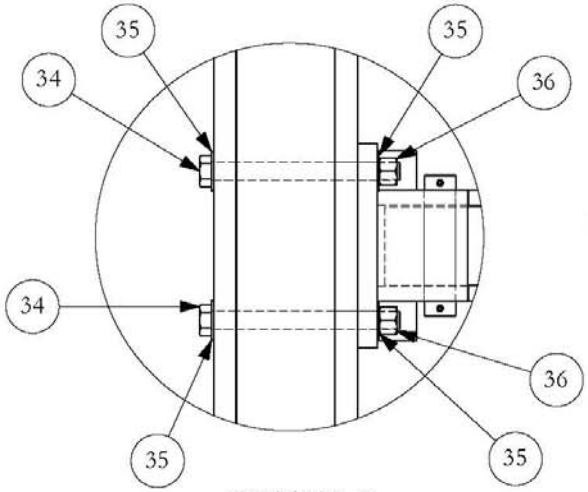

DETAIL F
SCALE 1 : 20

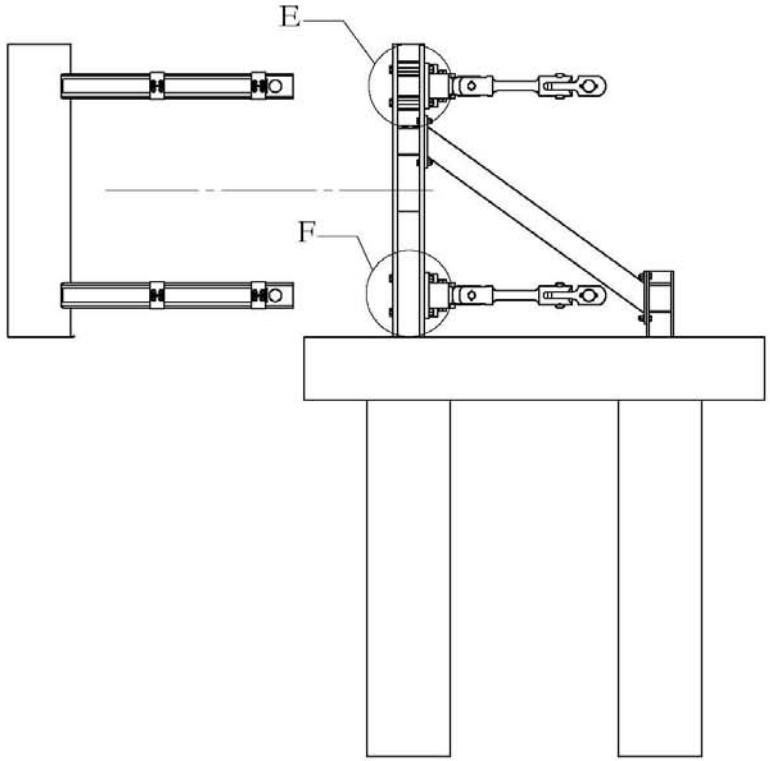

TRANSDUCER CONNECTIONS

The Texas A&M University System							
Revisions:				Texas Transportation Institute College Station, Texas, 77843			
No.	Date	By	Chk	Date	Drawn By	Scale	Sheet No.
1.				2009-06-22	GES	1:90	15 of 32
2.							
3.				Project No.	Transducer Connection		
4.				429739 TxDOT			
5.				TxDOT Bridge Pier			

T:\2008-2009\429739 TxDOT Bridge Pier\SolidWorks\Drawings\Full Set

TRANSDUCER LINK
PRIOR TO HEAT TREATMENT

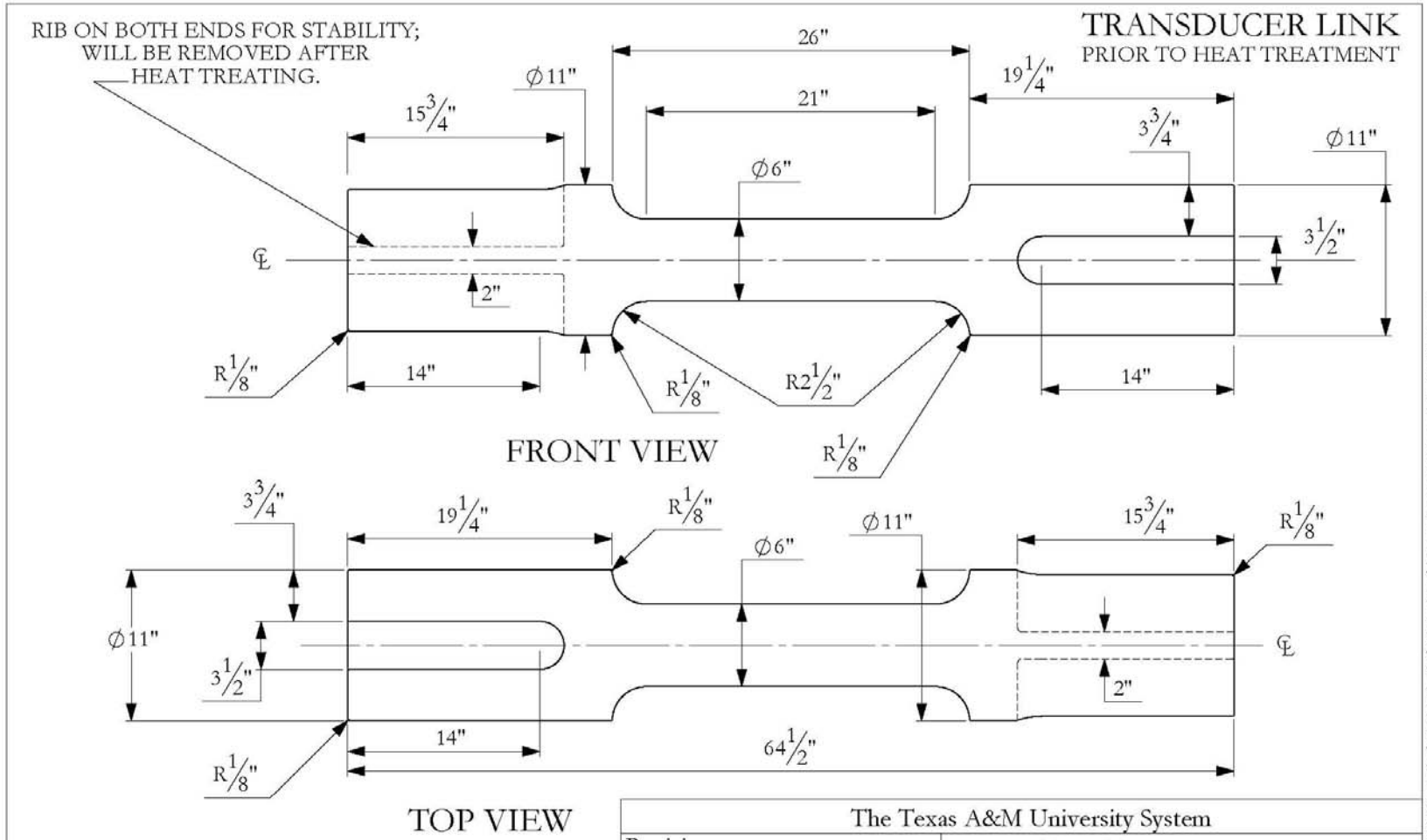

1. PART IS SYMMETRICAL ABOUT CENTERLINES.
2. DUE TO FURTHER MILLING AFTER HEAT TREATING, TOLERANCES ARE +/- 1/16" AND PART MAY BE ROUGH-CUT.
3. PART IS AISI 4140 STEEL.
4. 1/8" FILLET ALL EDGES UNLESS OTHERWISE INDICATED. (SEE NEXT PAGE)

The Texas A&M University System							
Revisions:				Texas Transportation Institute College Station, Texas, 77843			
No.	Date	By	Chk				
1.				Date	Drawn By	Scale	Sheet No.
2.				2009-07-08	GES	1:10	15a
3.				Project No.	Transducer Link		
4.				429739			
5.				TxDOT Bridge Pier			

T:\2008-2009\429739 TxDOT Bridge Pier\SolidWorks\Drawings\Transducer Parts, pre-heat treatment

*ALL RADIUS DIMENSIONS TYPICAL BOTH ENDS

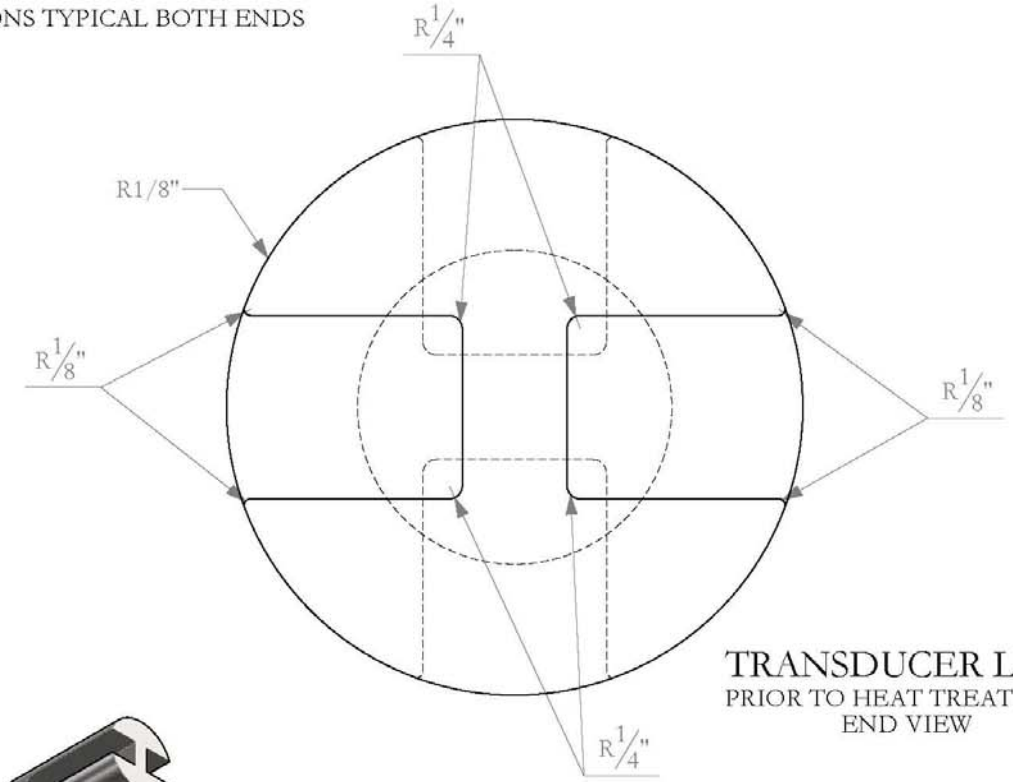

TRANSDUCER LINK
PRIOR TO HEAT TREATMENT
END VIEW

ISOMETRIC VIEW
SCALE 1:10

The Texas A&M University System							
Revisions:				Texas Transportation Institute College Station, Texas, 77843			
No.	Date	By	Chk	Date	Drawn By	Scale	Sheet No.
1.				2009-07-08	GES	1:3	15b
2.							
3.				Project No.	Transducer Link end view		
4.				429739			
5.				TxDOT Bridge Pier			

T:\2008-2009\429739 TxDOT Bridge Pier\SolidWorks\Drawings\Transducer Parts, pre-heat treatment

TRANSDUCER KNUCKLE, a

PRIOR TO HEAT TREATMENT

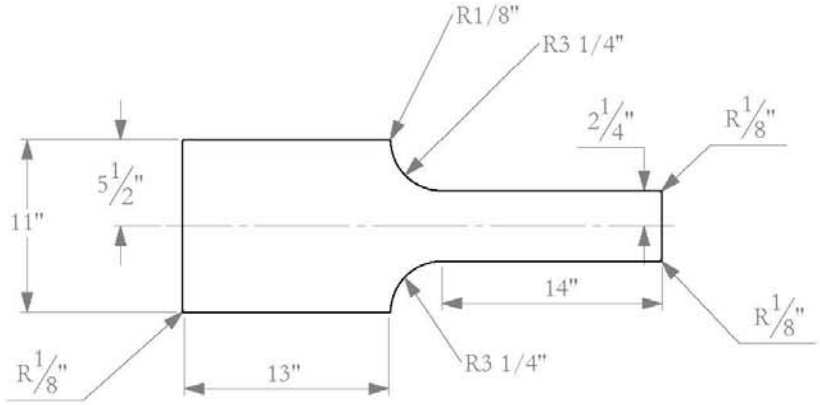

PLAN VIEW

ISOMETRIC VIEW

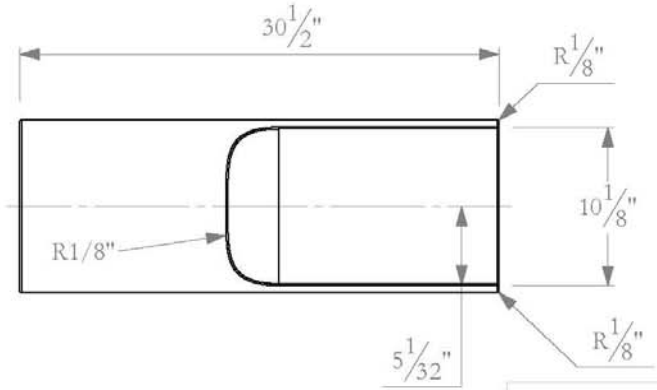

ELEVATION VIEW

1. PART IS SYMMETRICAL ABOUT CENTERLINES.
2. DUE TO FURTHER MILLING AFTER HEAT TREATING, TOLERANCES ARE +/- 1/16" AND PART MAY BE ROUGH-CUT.
3. PART IS AISI 4140 STEEL.
4. 1/8" FILLET ALL EDGES.

The Texas A&M University System

Revisions:				Texas Transportation Institute College Station, Texas, 77843			
No.	Date	By	Chk				
1.				Date	Drawn By	Scale	Sheet No.
2.				2009-07-08	GES	1:10	15c
3.				Project No.	Transducer Knuckle, a		
4.				429739			
5.				TxDOT Bridge Pier			

T:\2008-2009\429739 TxDOT Bridge Pier\SolidWorks\Drawings\Transducer Parts, pre-heat treatment

TRANSDUCER KNUCKLE, b

PRIOR TO HEAT TREATMENT

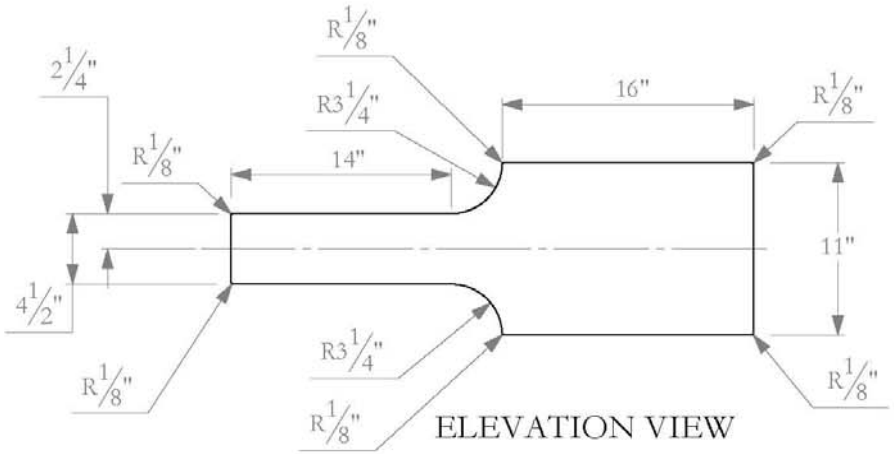

ELEVATION VIEW

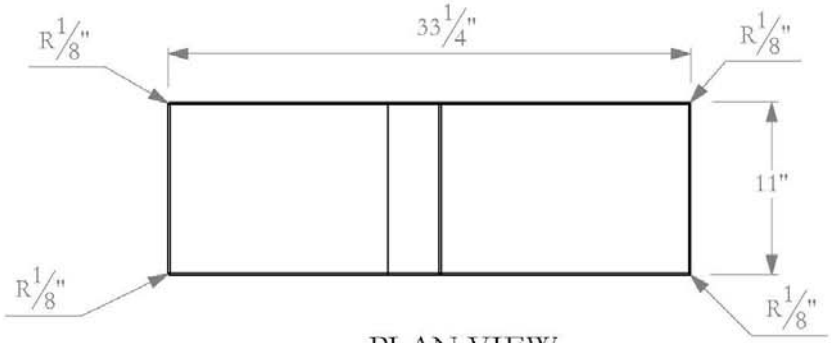

PLAN VIEW

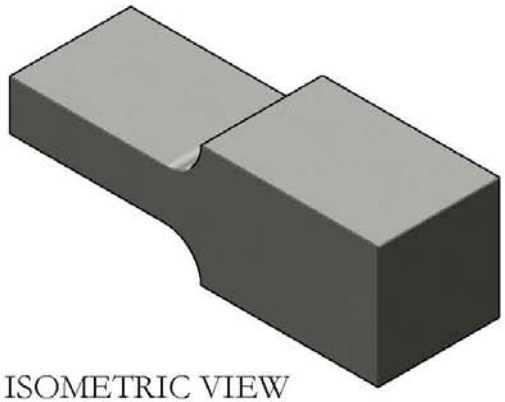

ISOMETRIC VIEW

1. PART IS SYMMETRICAL ABOUT CENTERLINES.
2. DUE TO FURTHER MILLING AFTER HEAT TREATING, TOLERANCES ARE +/- 1/16" AND PART MAY BE ROUGH-CUT.
3. PART IS AISI 4140 STEEL.
4. 1/8" FILLET ALL EDGES.

The Texas A&M University System

Revisions:				Texas Transportation Institute College Station, Texas, 77843			
No.	Date	By	Chk				
1.				Date	Drawn By	Scale	Sheet No.
2.				2009-07-08	GES	1:10	15d
3.				Project No.	Transducer Knuckle, b		
4.				429739			
5.				TxDOT Bridge Pier			

T:\2008-2009\429739 TxDOT Bridge Pier\SolidWorks\Drawings\Transducer Parts, pre-heat treatment

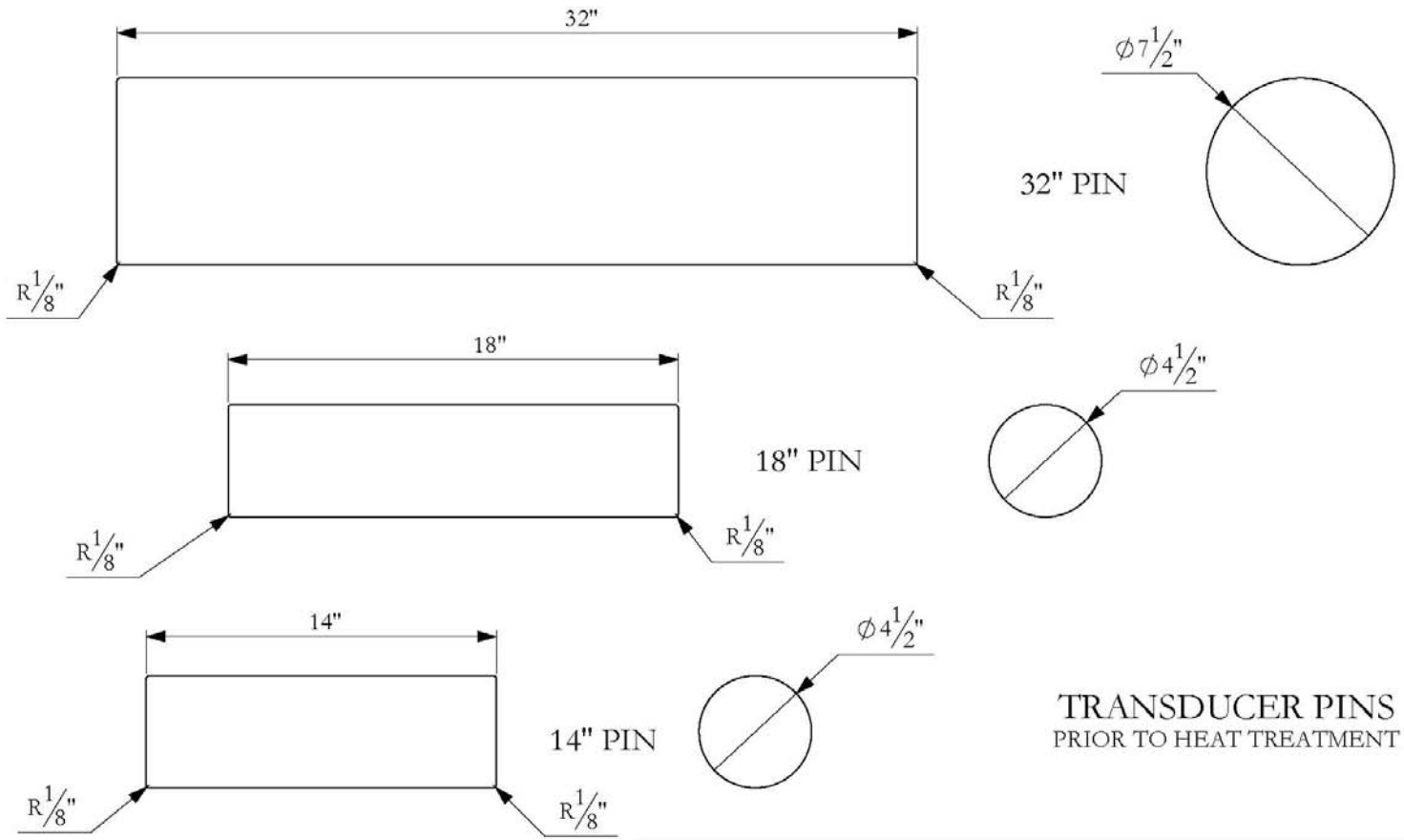

TRANSDUCER PINS
PRIOR TO HEAT TREATMENT

1. DUE TO FURTHER MILLING AFTER HEAT TREATING, TOLERANCES ARE +/- 1/16" AND PART MAY BE ROUGH-CUT.
2. PART IS AISI 4140 STEEL.
3. 1/8" FILLET ALL EDGES.

The Texas A&M University System							
Revisions:				Texas Transportation Institute College Station, Texas, 77843			
No.	Date	By	Chk				
1.				Date	Drawn By	Scale	Sheet No.
2.				2009-07-08	GES	1:6	15e
3.				Project No.	Pins		
4.				429739			
5.				TxDOT Bridge Pier			

T:\2008-2009\429739 TxDOT Bridge Pier\SolidWorks\Drawings\Transducer Parts, pre-heat treatment

26. TRANSDUCER LINK

HEAT TREATED AISI 4140 MIN.
100 KSI YIELD, 115 KSI ULTIMATE

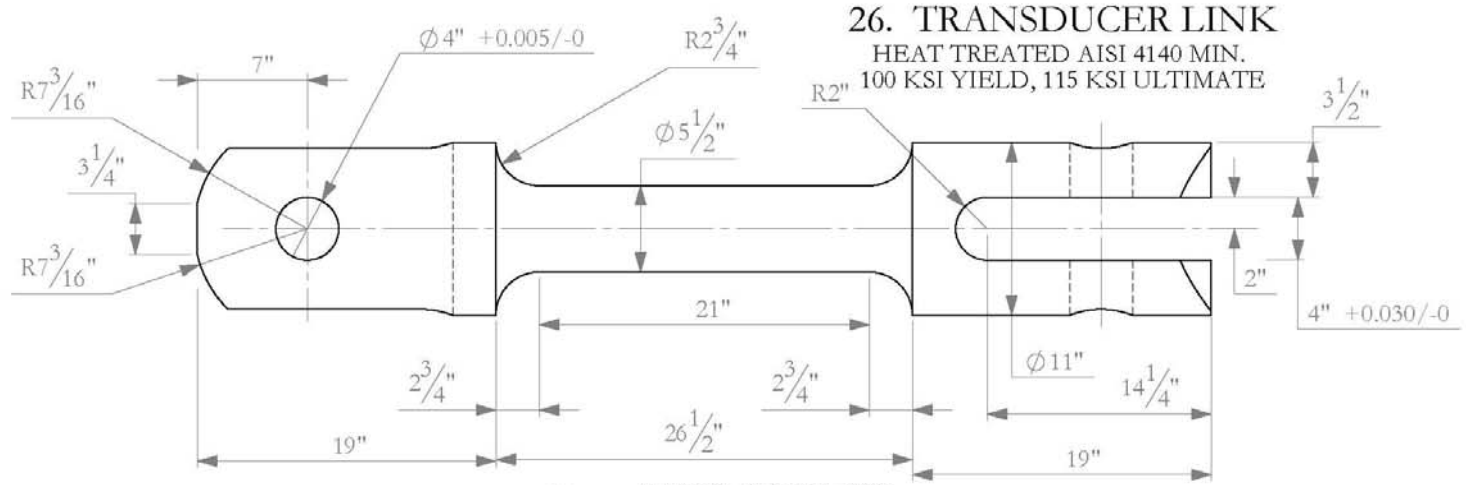

FRONT VIEW

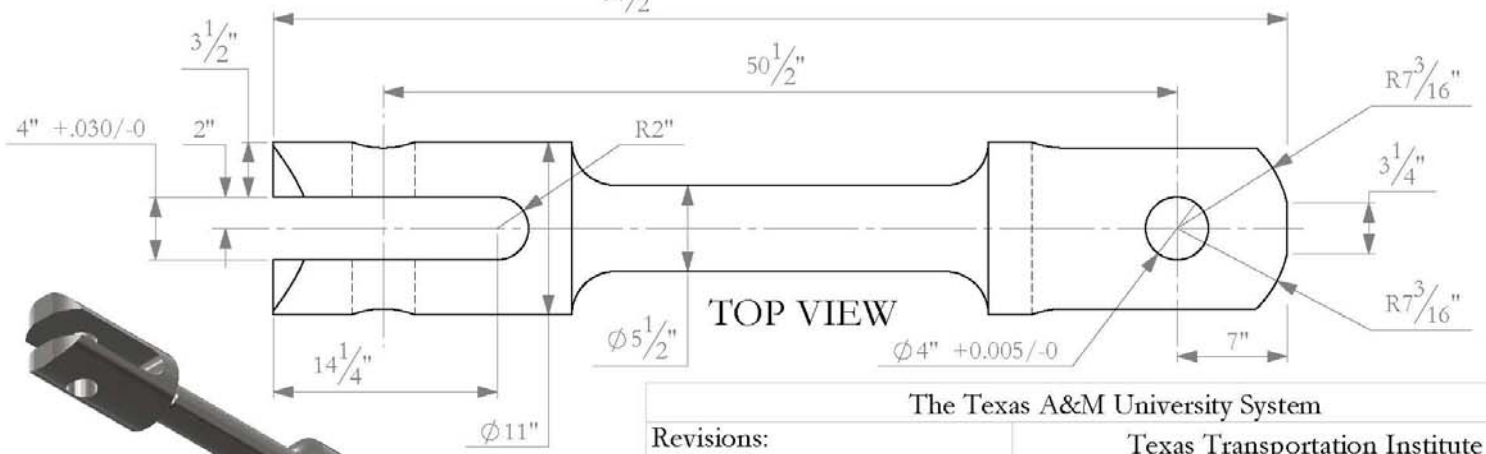

TOP VIEW

ISOMETRIC VIEW
SCALE 1:20

*TOLERANCES ON THIS PART - 0.030 UNLESS SPECIFIED

The Texas A&M University System

Revisions:

No.	Date	By	Chk
1.	2009-07-08	GES	WW
2.			
3.			
4.			
5.			

Texas Transportation Institute
College Station, Texas, 77843

Date	Drawn By	Scale	Sheet No.
2009-06-22	GES	1:10	16 of 32

Project No. 429739 TxDOT

Transducer

TxDOT Bridge Pier

T:\2008-2009\429739 TxDOT Bridge Pier\SolidWorks\Drawings\Full Set

24. TRANSDUCER KNUCKLE, a

HEAT TREATED AISI 4140 MIN.
100 KSI YIELD, 115 KSI ULTIMATE

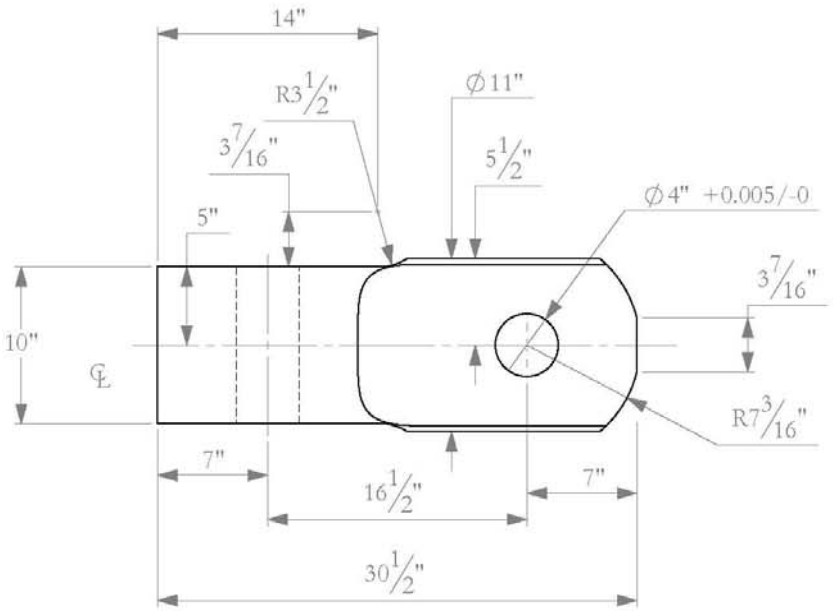

ELEVATION VIEW

ISOMETRIC VIEW

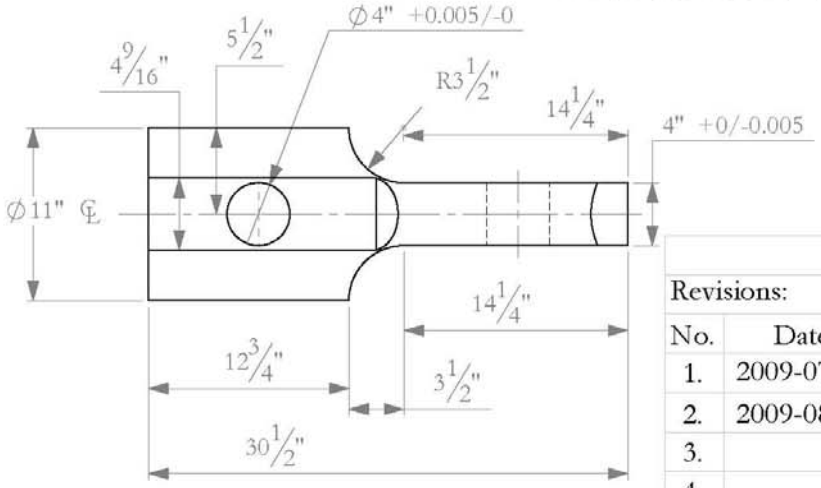

PLAN VIEW

1. TOLERANCES ON THIS PART - 0.030 UNLESS SPECIFIED.
2. PART IS SYMMETRICAL ABOUT ℄'S.

The Texas A&M University System

Revisions:				Texas Transportation Institute College Station, Texas, 77843			
No.	Date	By	Chk				
1.	2009-07-08	GES	WW	Date	Drawn By	Scale	Sheet No.
2.	2009-08-25	GES	WW	2009-06-22	GES	1:10	17 of 32
3.				Project No.	Transducer Knuckle, a		
4.				429739 TxDOT			
5.				TxDOT Bridge Pier			

T:\2008-2009\429739 TxDOT Bridge Pier\SolidWorks\Drawings\Full Set

25. TRANSDUCER KNUCKLE, b

HEAT TREATED AISI 4140 MIN.
100 KSI YIELD, 115 KSI ULTIMATE

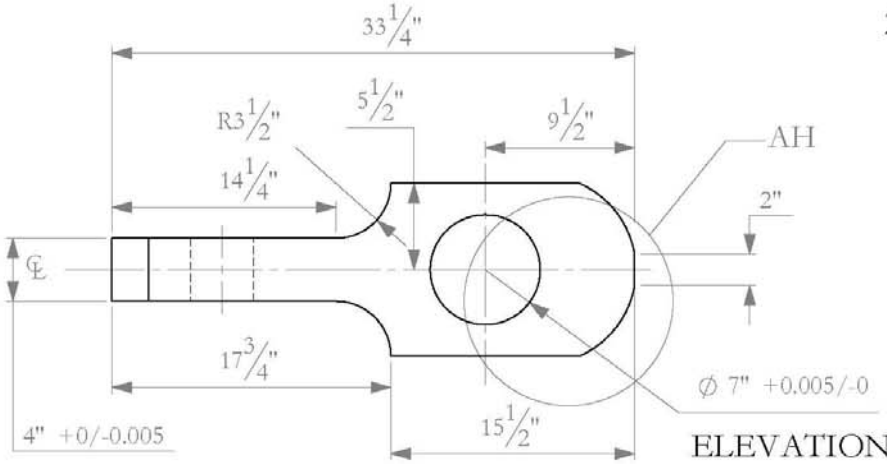

ELEVATION VIEWS

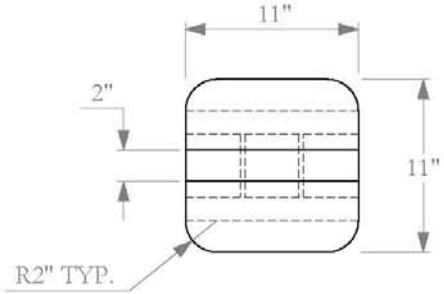

ISOMETRIC VIEW
SCALE 1:10

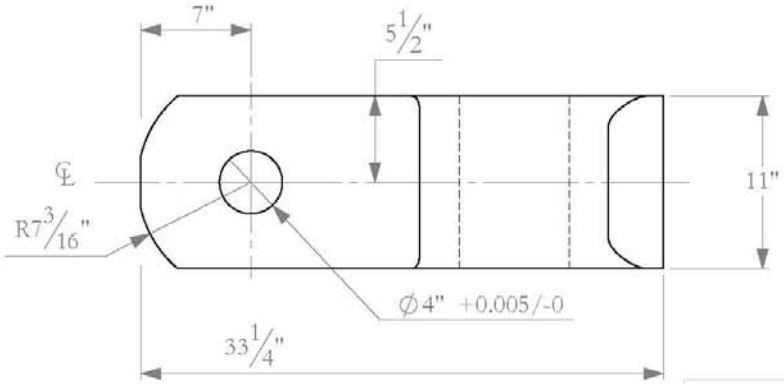

PLAN VIEW

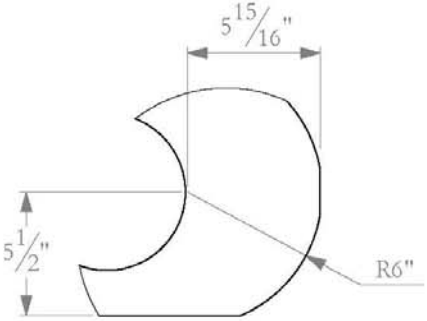

DETAIL AH
SCALE 1 : 7

1. TOLERANCES ON THIS PART - 0.030 UNLESS SPECIFIED.
2. PART IS SYMMETRICAL ABOUT ℄'S.

The Texas A&M University System							
Revisions:				Texas Transportation Institute College Station, Texas, 77843			
No.	Date	By	Chk				
1.	2009-07-08	GES	WW	Date	Drawn By	Scale	Sheet No.
2.	2009-08-24	GES	WW	2009-06-22	GES	1:10	18 of 32
3.				Project No.	Transducer Knuckle, b		
4.				429739 TxDOT			
5.				TxDOT Bridge Pier			

T:\2008-2009\429739 TxDOT Bridge Pier\SolidWorks\Drawings\Full Set

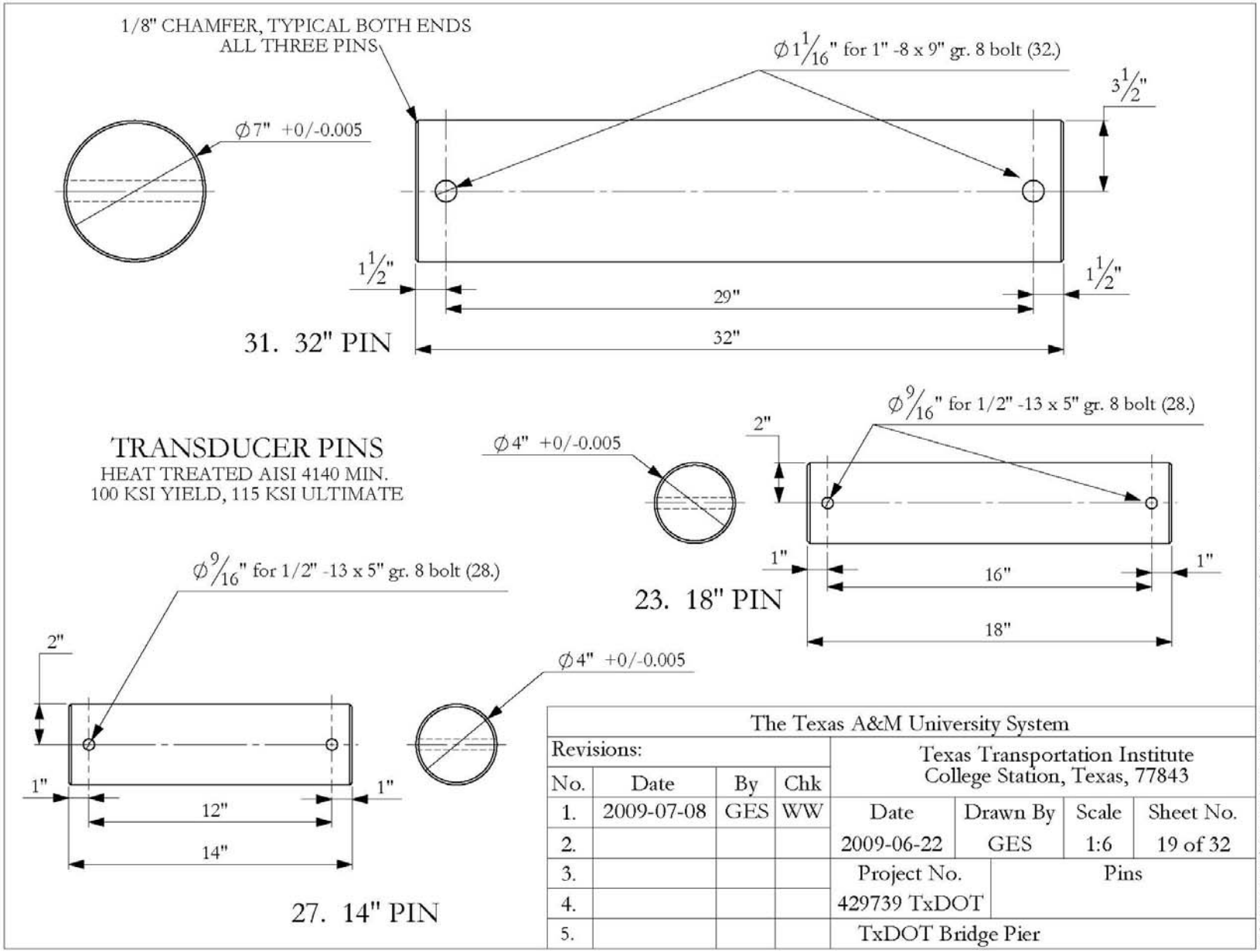
1/8" CHAMFER, TYPICAL BOTH ENDS
ALL THREE PINS
Ø1 1/16" for 1" -8 x 9" gr. 8 bolt (32.)
3 1/2"
Ø7" +0/-0.005
1 1/2"
29"
1 1/2"
32"
31. 32" PIN
TRANSDUCER PINS
HEAT TREATED AISI 4140 MIN.
100 KSI YIELD, 115 KSI ULTIMATE
Ø9/16" for 1/2" -13 x 5" gr. 8 bolt (28.)
Ø4" +0/-0.005
2"
1"
16"
1"
18"
23. 18" PIN
Ø9/16" for 1/2" -13 x 5" gr. 8 bolt (28.)
2"
Ø4" +0/-0.005
1"
12"
1"
14"
27. 14" PIN
The Texas A&M University System
Revisions:
No. Date By Chk
1. 2009-07-08 GES WW
2.
3.
4.
5.
Texas Transportation Institute
College Station, Texas, 77843
Date 2009-06-22
Drawn By GES
Scale 1:6
Sheet No. 19 of 32
Project No. 429739 TxDOT
Pins
TxDOT Bridge Pier
T:\2008-2009\429739 TxDOT Bridge Pier\SolidWorks\Drawings\Full Set

30. TRANSDUCER MOUNTING BRACKET

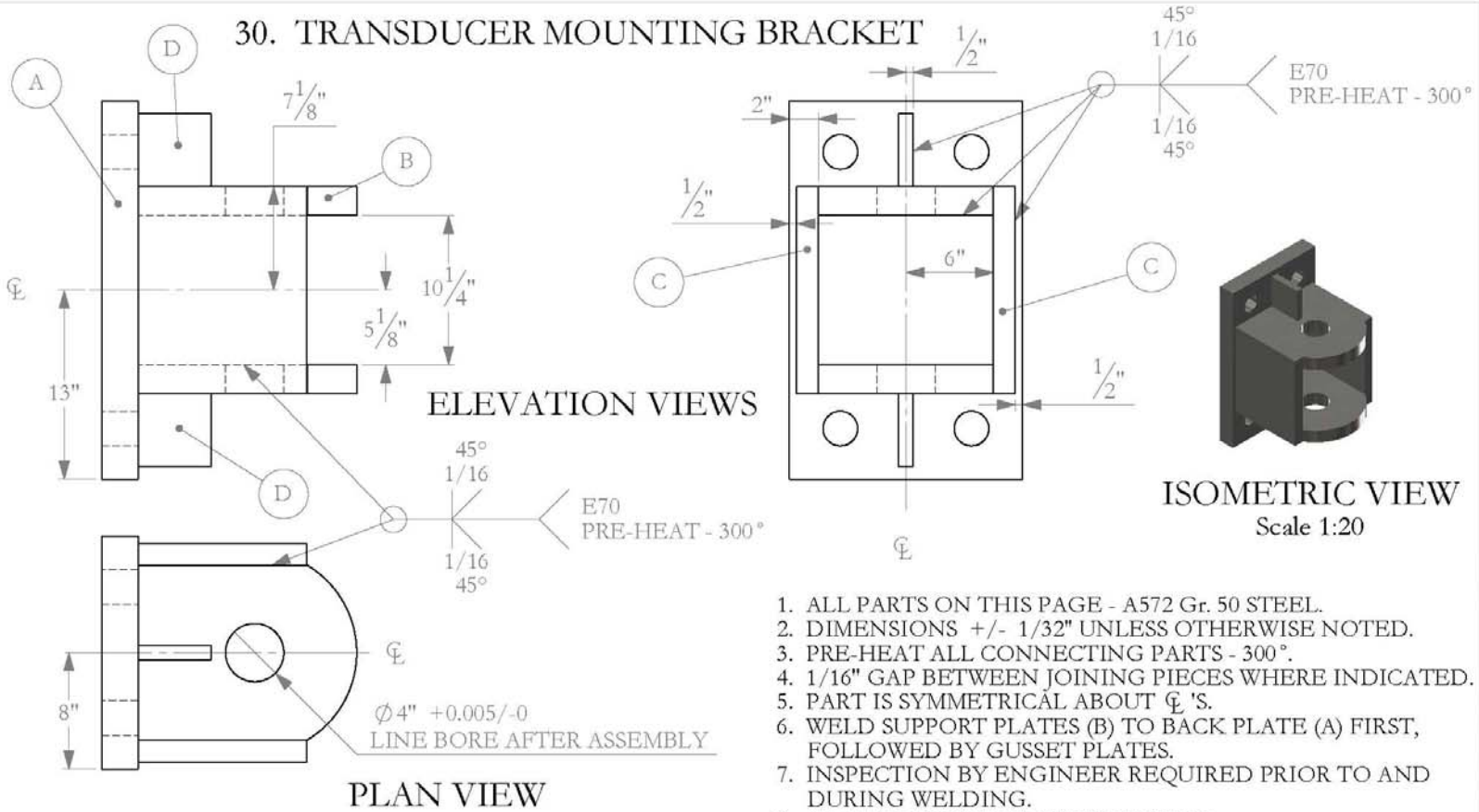

1. ALL PARTS ON THIS PAGE - A572 Gr. 50 STEEL.
2. DIMENSIONS +/- 1/32" UNLESS OTHERWISE NOTED.
3. PRE-HEAT ALL CONNECTING PARTS - 300°.
4. 1/16" GAP BETWEEN JOINING PIECES WHERE INDICATED.
5. PART IS SYMMETRICAL ABOUT ℄ 'S.
6. WELD SUPPORT PLATES (B) TO BACK PLATE (A) FIRST, FOLLOWED BY GUSSET PLATES.
7. INSPECTION BY ENGINEER REQUIRED PRIOR TO AND DURING WELDING.
8. ALL WELDING BY CERTIFIED WELDER.

BRACKET PARTS

#	NAME	NEEDED
A	Back Plate	2
B	Support Plate	4
C	Side Gusset Plate	4
D	Small Gusset Plate	4

The Texas A&M University System

Revisions:

No.	Date	By	Chk
1.			
2.			
3.			
4.			
5.			

Texas Transportation Institute
College Station, Texas, 77843

Date	Drawn By	Scale	Sheet No.
2009-06-22	GES	1:10	20 of 32

Project No.	Transducer Mounting Bracket
429739 TxDOT	

TxDOT Bridge Pier

T:\2008-2009\429739 TxDOT Bridge Pier\SolidWorks\Drawings\Full Set

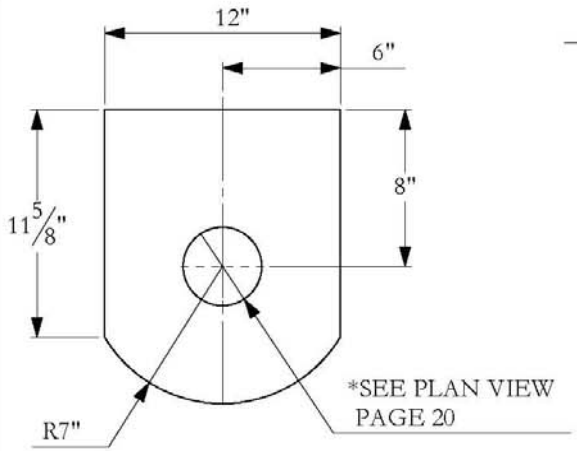

B. SUPPORT PLATE

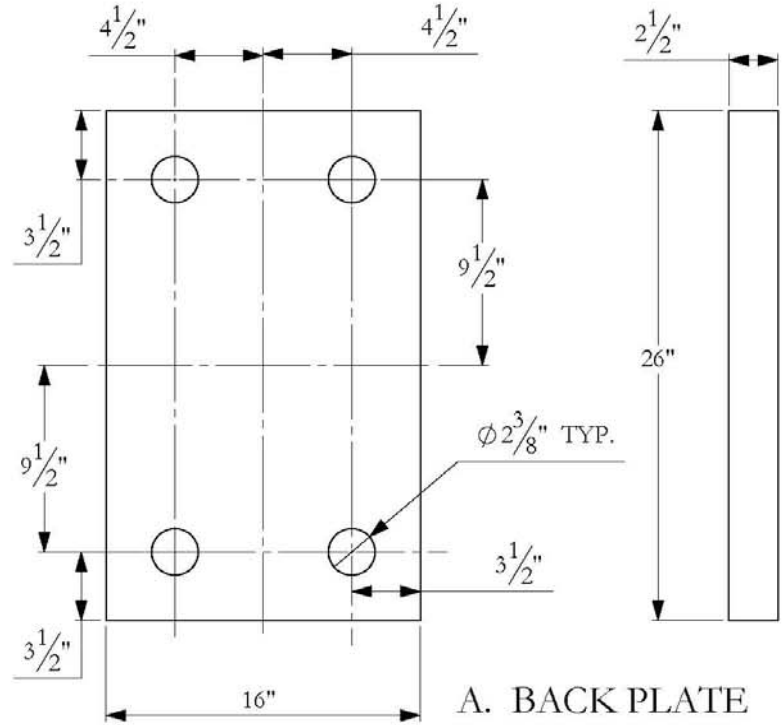

A. BACK PLATE

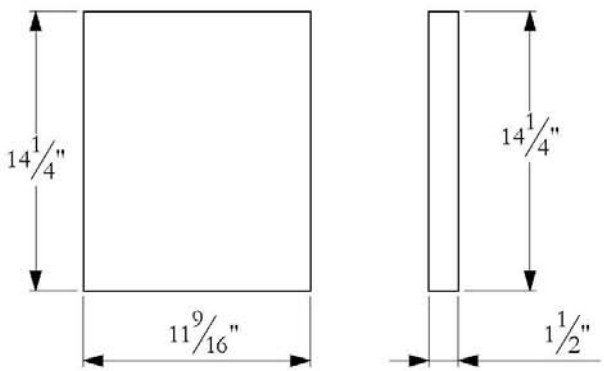

C. SIDE GUSSET PLATE

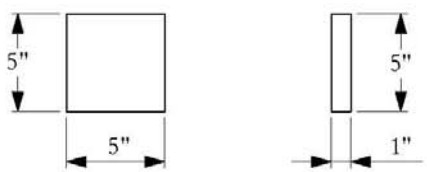

D. SMALL GUSSET PLATE

1. TOLERANCES ON THESE PARTS ± 1/16 " UNLESS SPECIFIED.
2. ALL PARTS THIS PAGE - A572 Gr. 50 STEEL

The Texas A&M University System							
Revisions:				Texas Transportation Institute College Station, Texas, 77843			
No.	Date	By	Chk				
1.				Date	Drawn By	Scale	Sheet No.
2.				2009-06-22	GES	1:8	21 of 32
3.				Project No.	Transducer Bracket Parts		
4.				429739 TxDOT			
5.				TxDOT Bridge Pier			

T:\2008-2009\429739 TxDOT Bridge Pier\SolidWorks\Drawings\Full Set

IMPACT PIER

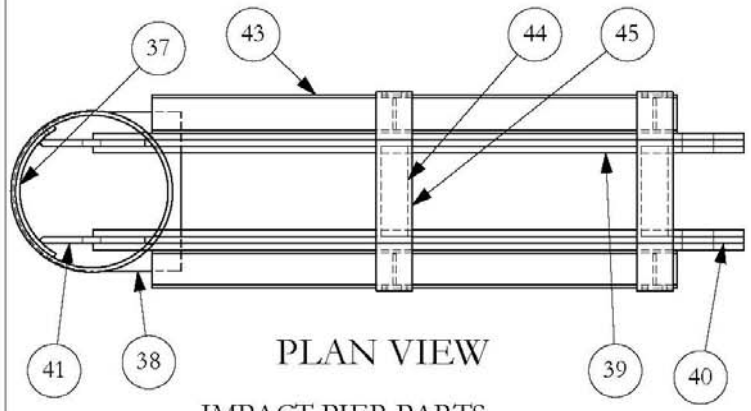

PLAN VIEW

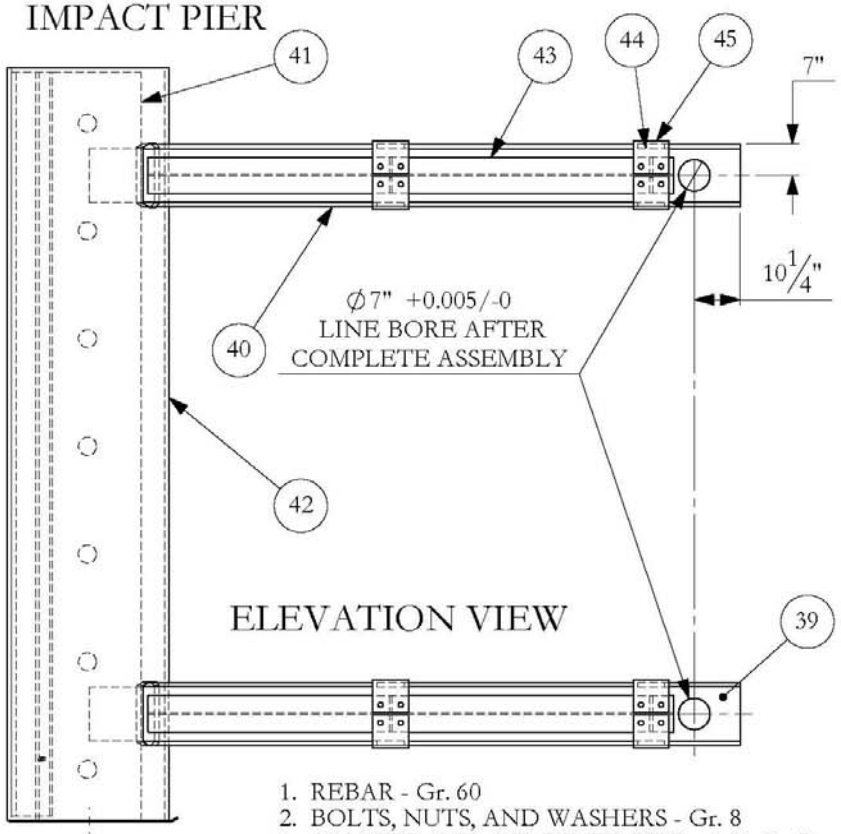

ELEVATION VIEW

1. REBAR - Gr. 60
2. BOLTS, NUTS, AND WASHERS - Gr. 8
3. (42.) PIPE AND (37.) INNER PIPE - A53 Gr. B
4. ALL OTHER PARTS - A572 Gr. 50

IMPACT PIER PARTS

#	PART NAME	NEED
37	Inner Pipe, 34"OD, 1"wall	1
38	Bottom Plate, 1/4" thick	1
39	Strap, 1 1/2" x 12"	8
40	Strap, 1 1/2" x 14"	4
41	Vertical Plate, 1 1/2" thick	2
42	Pipe, 36"OD 1" wall	1
43	W8X48, 9' 9" long	4
44	Strap, 1" x 6"	8
45	Bent Strap, 5/8" x 8"	8
46	Bolt, 1" -8 x 3" Gr. 8	32
47	Nut, 1" -8 Gr. 8	32
48	Washer, flat 1" Gr. 8	64
49	Rebar, #8 x 13' 10"	18
50	#4 Rebar Stirrups	28
51	Stiffener for W8X48	8

The Texas A&M University System

Revisions:

No.	Date	By	Chk
1.			
2.			
3.			
4.			
5.			

Texas Transportation Institute
College Station, Texas, 77843

Date	Drawn By	Scale	Sheet No.
2009-06-22	GES	1:40	22 of 32

Project No.	Impact Pier
429739 TxDOT	

TxDOT Bridge Pier

T:\2008-2009\429739 TxDOT Bridge Pier\SolidWorks\Drawings\Full Set

IMPACT PIER WITH CONCRETE

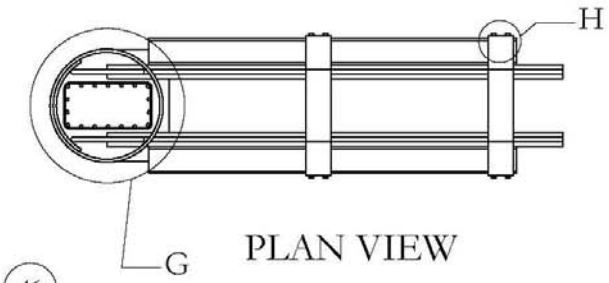

PLAN VIEW

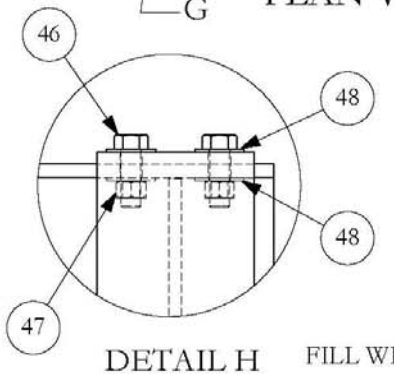

DETAIL H
SCALE 1 : 8

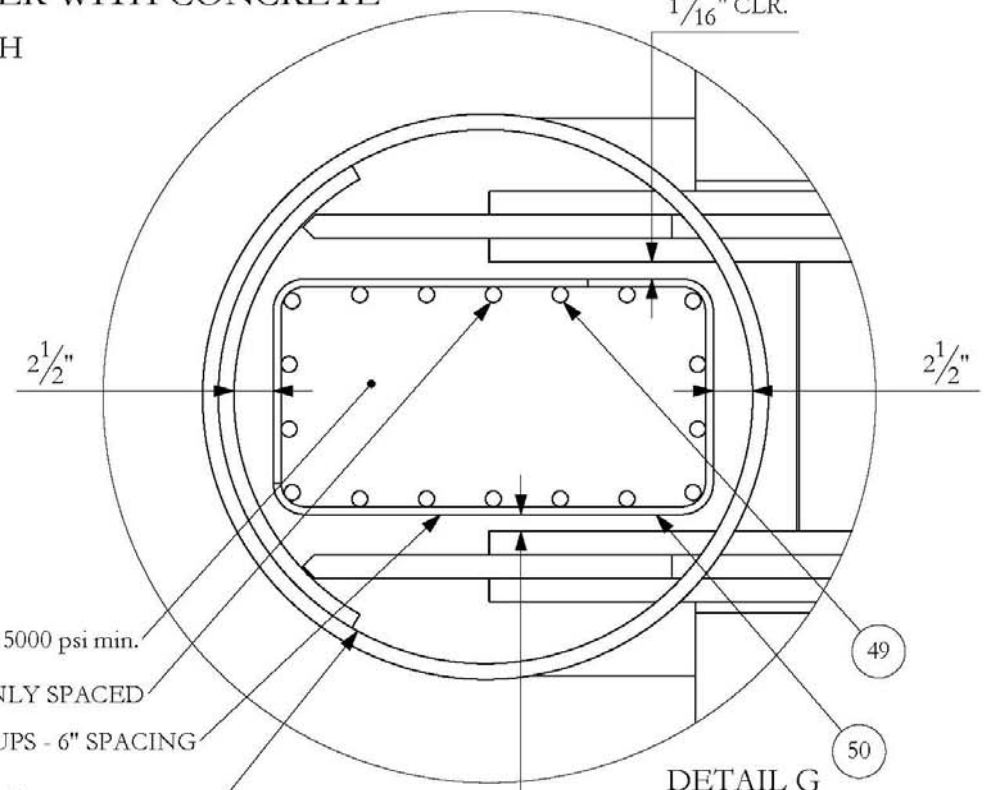

DETAIL G
SCALE 1 : 10

FILL WITH CONCRETE - 5000 psi min.

#8 x 13'10" REBAR - EVENLY SPACED

#4 REBAR STIRRUPS - 6" SPACING

E70
PRE-HEAT - 300°
*SEE NOTE 2, PAGE 24

3/4

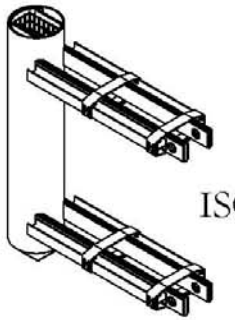

ISOMETRIC VIEW
Scale 1:100

1. ALL WELDING BY CERTIFIED WELDER.

The Texas A&M University System							
Revisions:				Texas Transportation Institute College Station, Texas, 77843			
No.	Date	By	Chk	Date	Drawn By	Scale	Sheet No.
1.				2009-06-22	GES	1:50	23 of 32
2.							
3.				Project No.	Impact Pier Assembly		
4.				429739 TxDOT			
5.				TxDOT Bridge Pier			

T:\2008-2009\429739 TxDOT Bridge Pier\SolidWorks\Drawings\Full Set

UP TO 4 HOLES MAY BE CUT IN 36" PIPE TO ALLOW ACCESS FOR WELDING, NO LARGER THAN 16" IN ANY DIRECTION.REPAIR WITH BEVEL WELD AND BACKER PLATE, PRE- HEATING ALL PARTS TO 300 °.

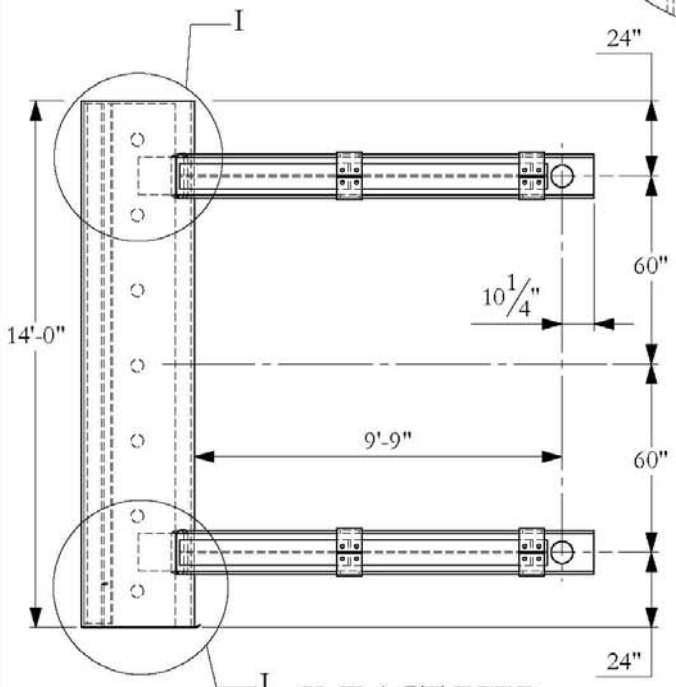

IMPACT PIER
ELEVATION VIEW

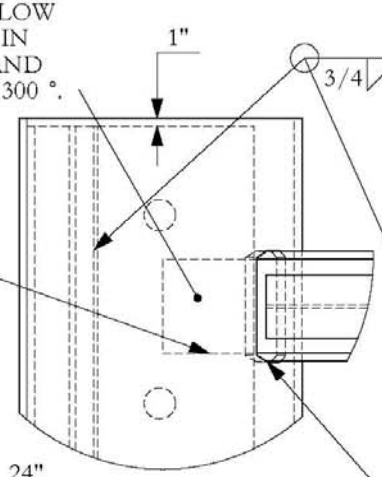

DETAIL I
SCALE 1 : 20

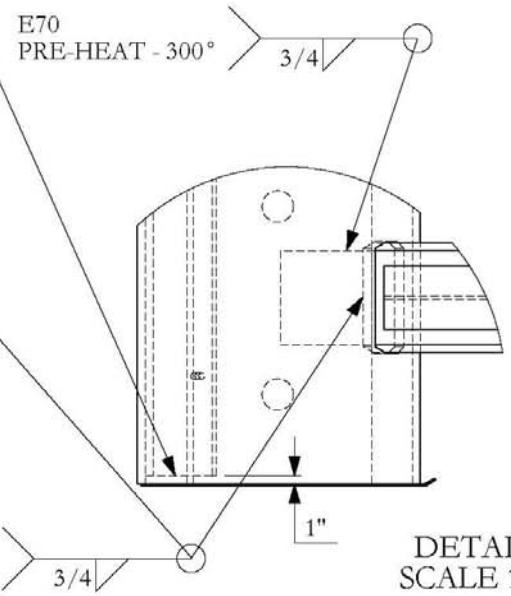

DETAIL J
SCALE 1 : 20

1. PRE-HEAT ALL CONNECTING PARTS - 300°.
2. WELD INNER PIPE TO 36" PIPE CONTINUOUS ALONG TOP AND BOTTOM, AND AS FAR AS POSSIBLE ON SIDES.
3. ALL WELDING BY CERTIFIED WELDER.

The Texas A&M University System							
Revisions:				Texas Transportation Institute College Station, Texas, 77843			
No.	Date	By	Chk	Date	Drawn By	Scale	Sheet No.
1.				2009-06-22	GES	1:50	24 of 32
2.							
3.				Project No.	Impact Pier - Elevation		
4.				429739 TxDOT			
5.				TxDOT Bridge Pier			

T:\2008-2009\429739 TxDOT Bridge Pier\SolidWorks\Drawings\Full Set

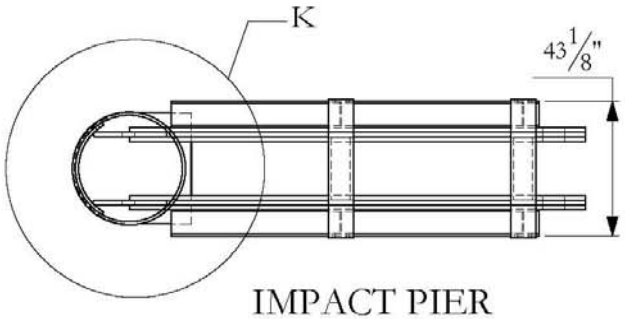

IMPACT PIER
PLAN VIEW - TOP

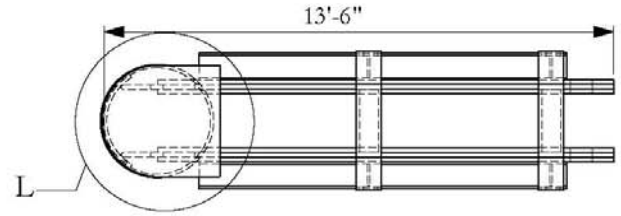

IMPACT PIER
PLAN VIEW - BOTTOM

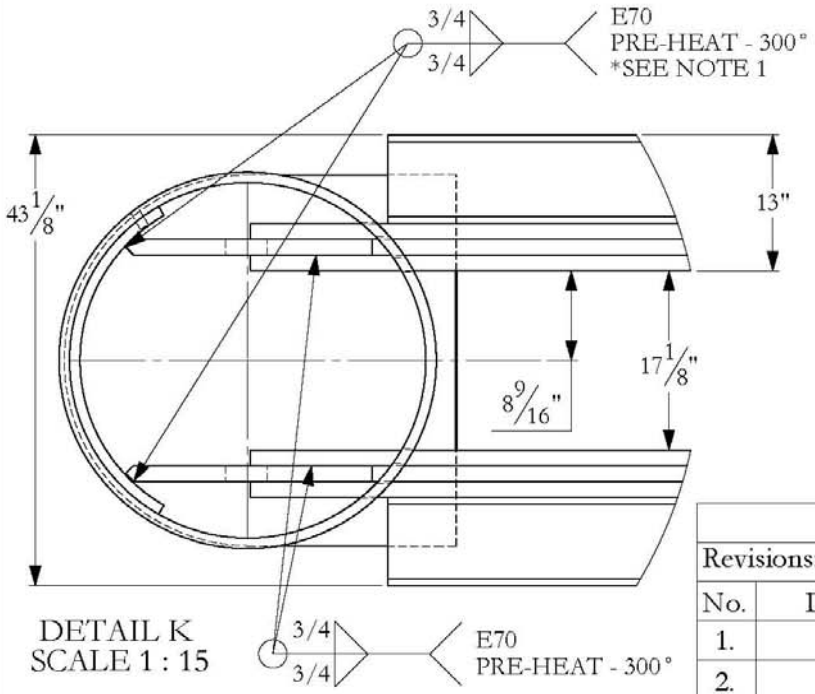

DETAIL K
SCALE 1 : 15

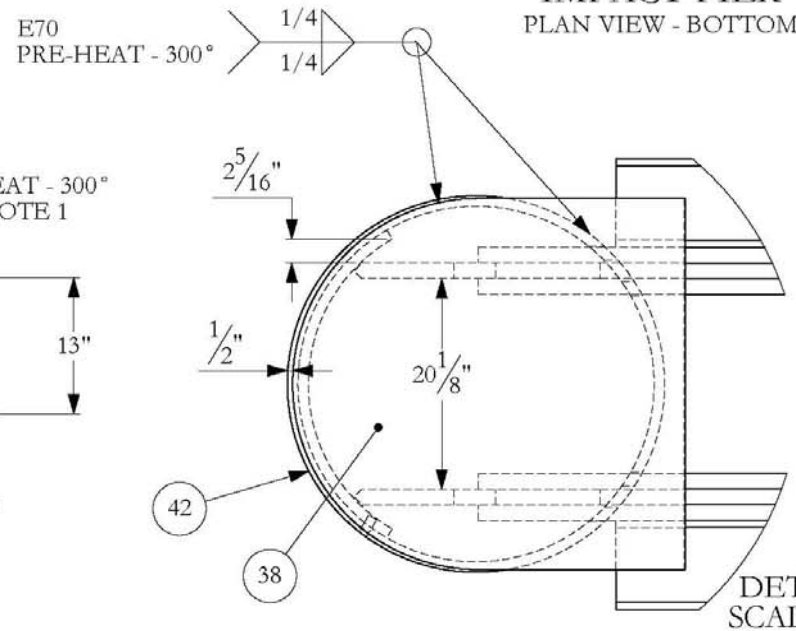

DETAIL L
SCALE 1 : 15

1. WELD VERTICAL PLATES TO 1/2 PIPE BEFORE INSERTING INTO 36" PIPE.
2. ALL WELDING BY CERTIFIED WELDER.

The Texas A&M University System							
Revisions:				Texas Transportation Institute College Station, Texas, 77843			
No.	Date	By	Chk				
1.				Date	Drawn By	Scale	Sheet No.
2.				2009-06-22	GES	1:50	25 of 32
3.				Project No.	Impact Pier - Plan		
4.				429739 TxDOT			
5.				TxDOT Bridge Pier			

T:\2008-2009\429739 TxDOT Bridge Pier\SolidWorks\Drawings\Full Set

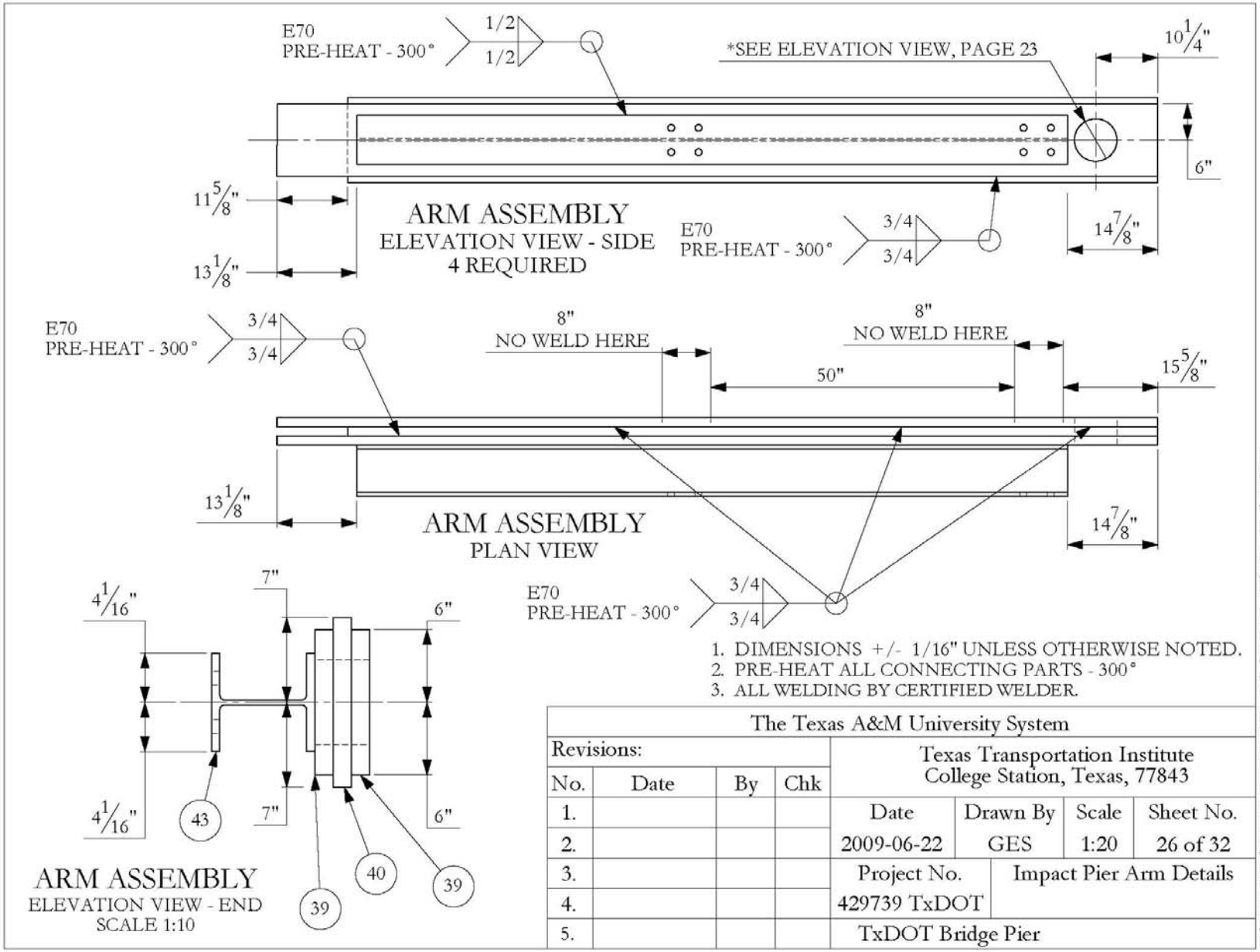
E70
PRE-HEAT - 300°
1/2
1/2
*SEE ELEVATION VIEW, PAGE 23
10 1/4"
6"
11 5/8"
13 1/8"
ARM ASSEMBLY
ELEVATION VIEW - SIDE
4 REQUIRED
E70
PRE-HEAT - 300°
3/4
3/4
14 7/8"
E70
PRE-HEAT - 300°
3/4
3/4
8"
NO WELD HERE
8"
NO WELD HERE
50"
15 5/8"
13 1/8"
ARM ASSEMBLY
PLAN VIEW
14 7/8"
E70
PRE-HEAT - 300°
3/4
3/4
4 1/16"
7"
6"
4 1/16"
43
7"
6"
40
39
39
ARM ASSEMBLY
ELEVATION VIEW - END
SCALE 1:10
1. DIMENSIONS +/- 1/16" UNLESS OTHERWISE NOTED.
2. PRE-HEAT ALL CONNECTING PARTS - 300°
3. ALL WELDING BY CERTIFIED WELDER.
The Texas A&M University System
Revisions:
No. Date By Chk
1.
2.
3.
4.
5.
Texas Transportation Institute
College Station, Texas, 77843
Date
2009-06-22
Drawn By
GES
Scale
1:20
Sheet No.
26 of 32
Project No.
429739 TxDOT
Impact Pier Arm Details
TxDOT Bridge Pier
T:\2008-2009\429739 TxDOT Bridge Pier\SolidWorks\Drawings\Full Set

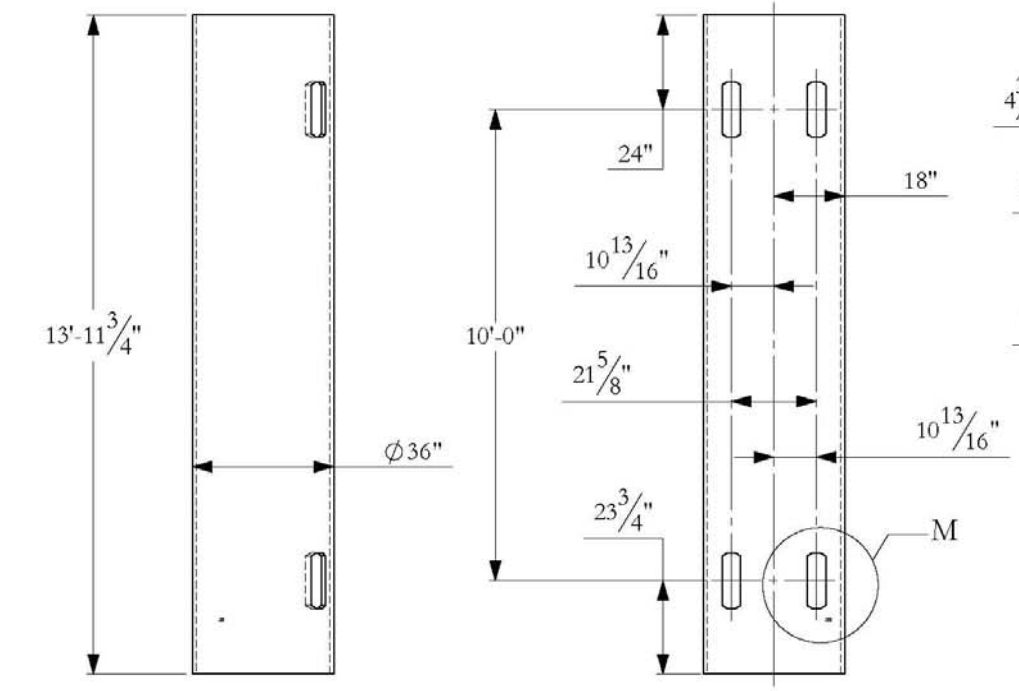

ELEVATION VIEWS

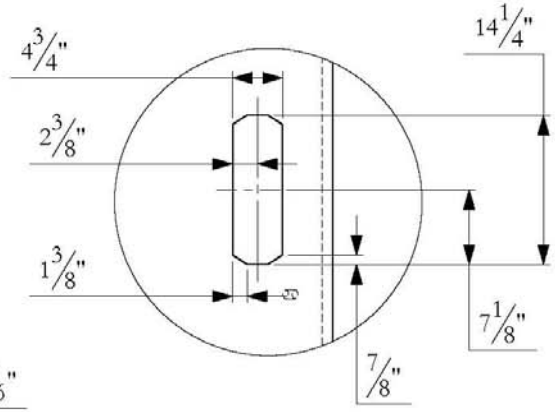

DETAIL M
SCALE 1 : 15
DIMENSIONS TYPICAL

42. PIPE, 36" O.D.
A53 grade B

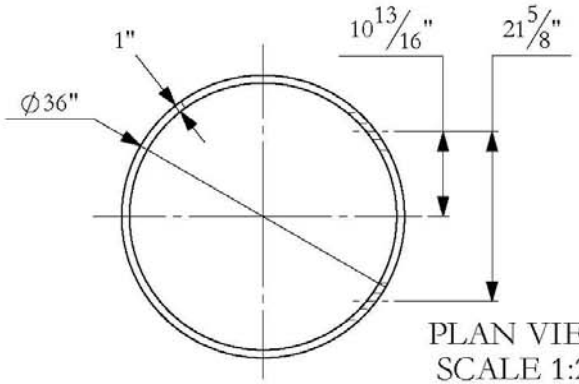

PLAN VIEW
SCALE 1:20

The Texas A&M University System							
Revisions:				Texas Transportation Institute College Station, Texas, 77843			
No.	Date	By	Chk	Date	Drawn By	Scale	Sheet No.
1.				2009-06-22	GES	1:40	27 of 32
2.							
3.				Project No.	Impact Pier - parts a		
4.				429739 TxDOT			
5.				TxDOT Bridge Pier			

T:\2008-2009\429739 TxDOT Bridge Pier\SolidWorks\Drawings\Full Set

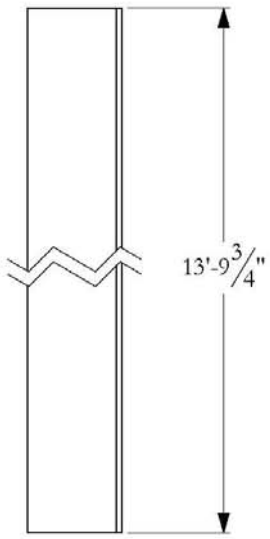

ELEVATION VIEW

37. INNER PIPE
A53 Gr. B

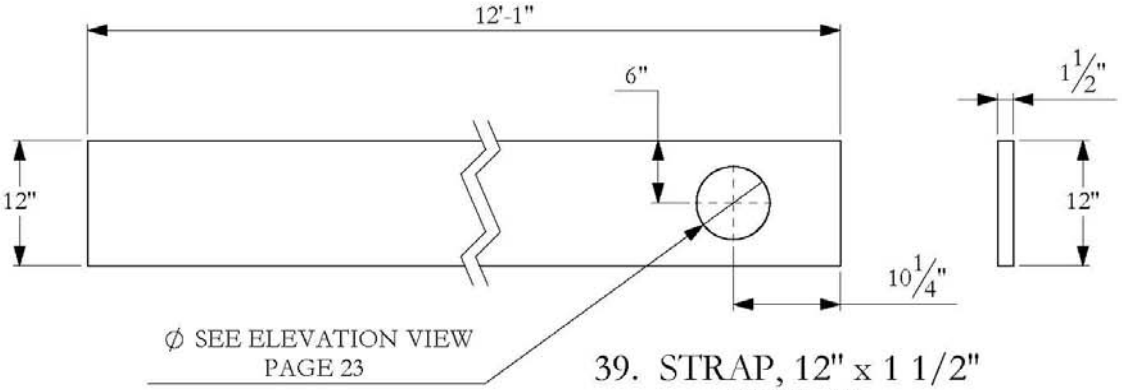

39. STRAP, 12" x 1 1/2"
A572 Gr. 50

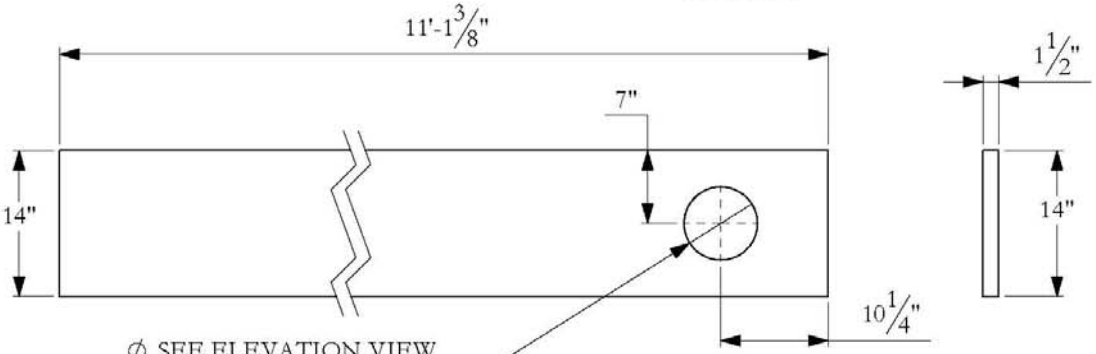

40. STRAP, 14" x 1 1/2"
A572 Gr. 50

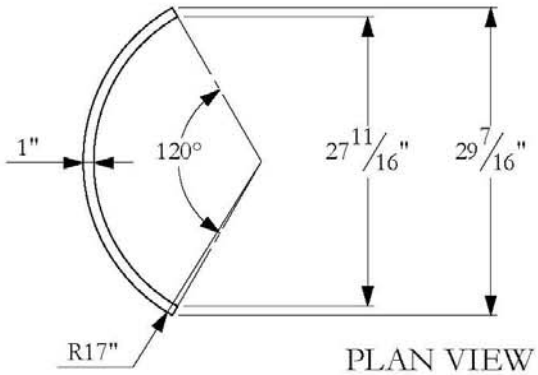

PLAN VIEW

The Texas A&M University System							
Revisions:				Texas Transportation Institute College Station, Texas, 77843			
No.	Date	By	Chk	Date	Drawn By	Scale	Sheet No.
1.				2009-06-22	GES	1:15	28 of 32
2.							
3.				Project No.	Impact Pier - parts b		
4.				429739 TxDOT			
5.				TxDOT Bridge Pier			

T:\2008-2009\429739 TxDOT Bridge Pier\SolidWorks\Drawings\Full Set

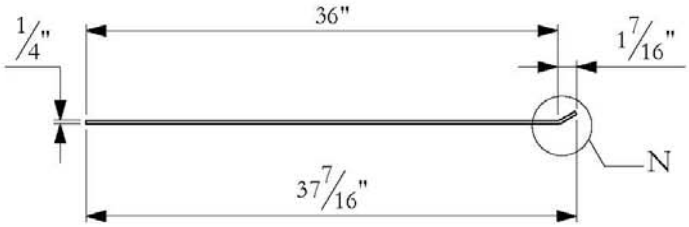

38. BOTTOM PLATE
ELEVATION VIEW
A572 Gr. 50

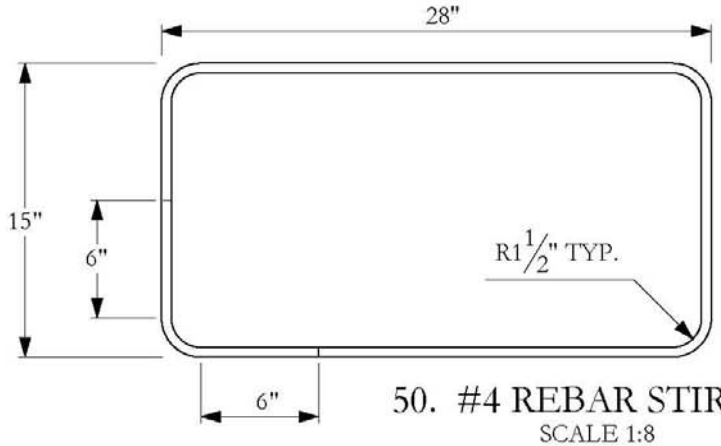

50. #4 REBAR STIRRUP
SCALE 1:8

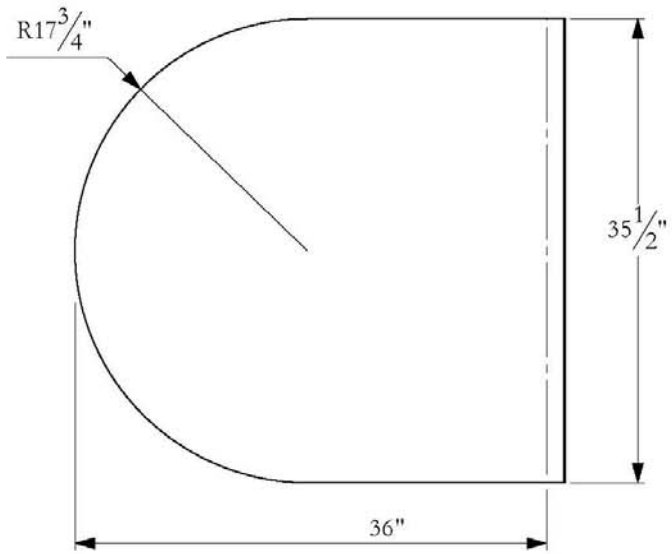

38. BOTTOM PLATE
PLAN VIEW
A572 Gr. 50

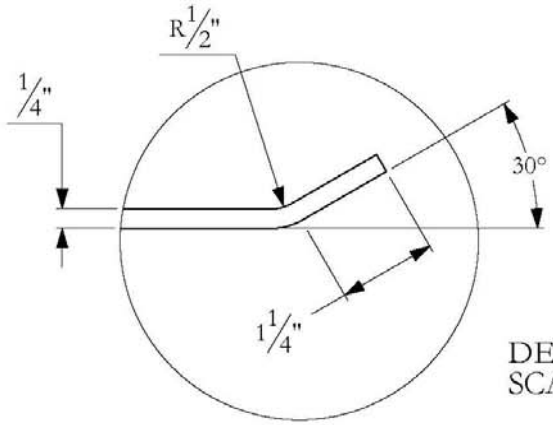

DETAIL N
SCALE 1 : 2

The Texas A&M University System							
Revisions:				Texas Transportation Institute College Station, Texas, 77843			
No.	Date	By	Chk				
1.				Date	Drawn By	Scale	Sheet No.
2.				2009-06-22	GES	1:12	29 of 32
3.				Project No.	Impact Pier - parts c		
4.				429739 TxDOT			
5.				TxDOT Bridge Pier			

T:\2008-2009\429739 TxDOT Bridge Pier\SolidWorks\Drawings\Full Set

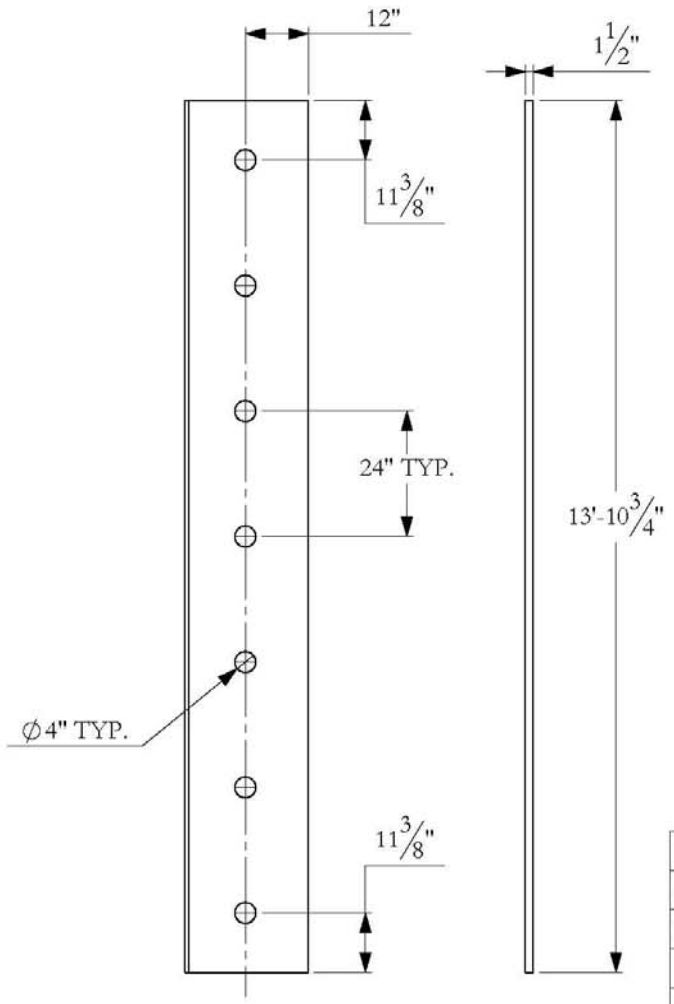

ELEVATION VIEWS

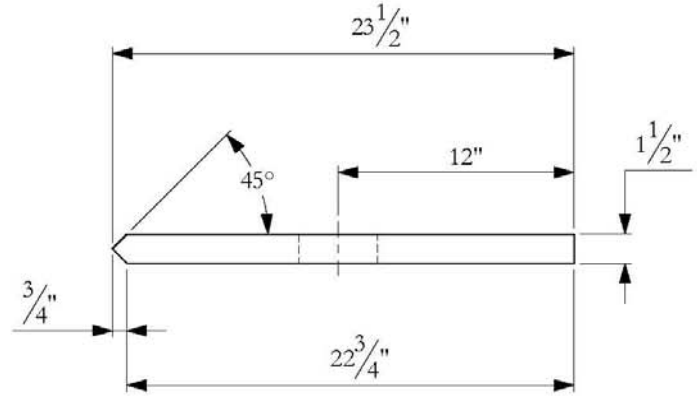

PLAN VIEW
Scale 1:8

41. VERTICAL PLATE

A572 Gr. 50

The Texas A&M University System							
Revisions:				Texas Transportation Institute College Station, Texas, 77843			
No.	Date	By	Chk				
1.				Date	Drawn By	Scale	Sheet No.
2.				2009-06-22	GES	1:30	30 of 32
3.				Project No.	Impact Pier - parts d		
4.				429739 TxDOT			
5.				TxDOT Bridge Pier			

T:\2008-2009\429739 TxDOT Bridge Pier\SolidWorks\Drawings\Full Set

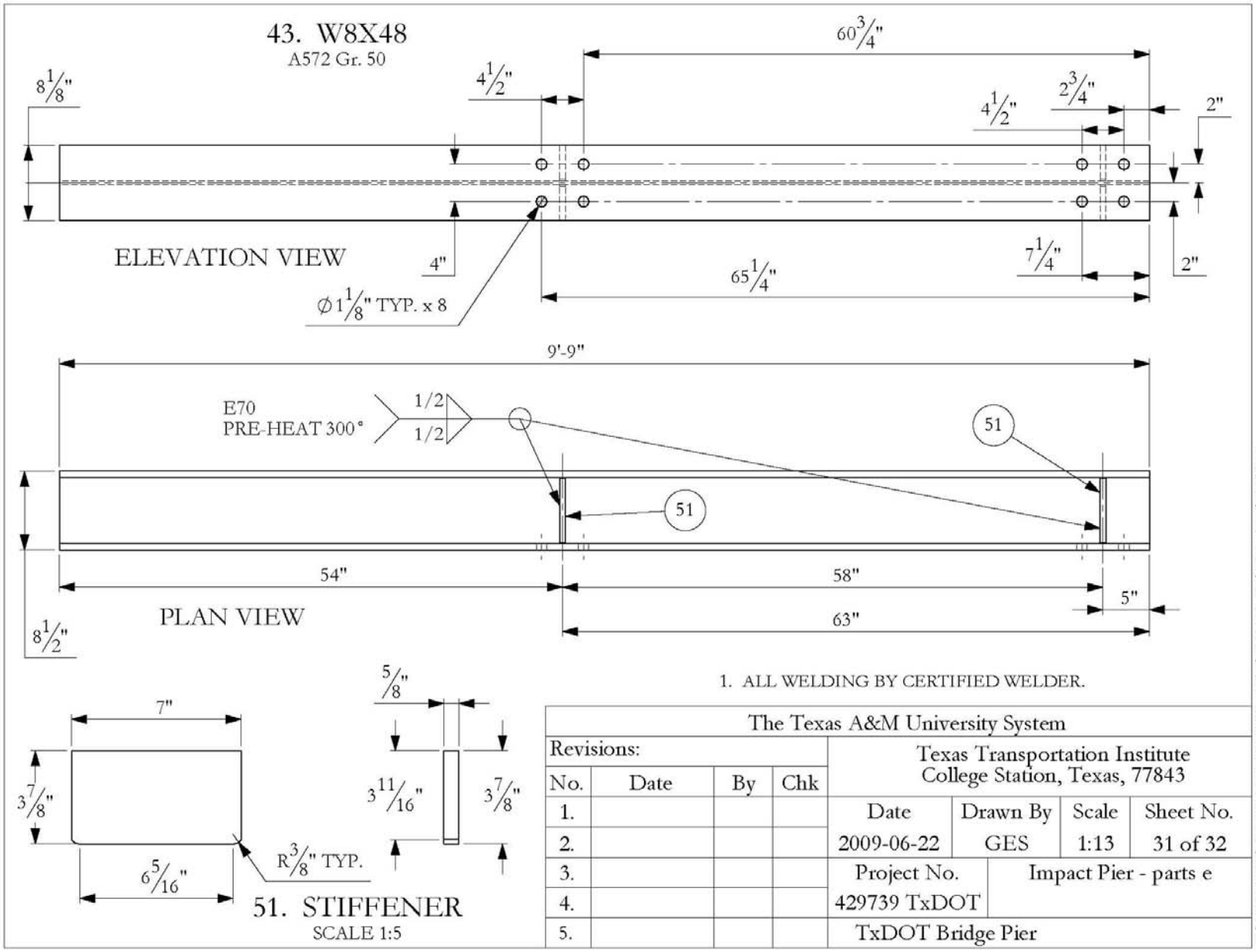
43. W8X48
A572 Gr. 50
60 3/4"
8 1/8"
4 1/2"
4 1/2"
2 3/4"
2"
ELEVATION VIEW
4"
7 1/4"
2"
65 1/4"
Ø1 1/8" TYP. x 8
9'-9"
E70
PRE-HEAT 300°
1/2
1/2
51
51
54"
58"
5"
63"
PLAN VIEW
8 1/2"
1. ALL WELDING BY CERTIFIED WELDER.
7"
5/8"
3 7/8"
3 11/16"
3 7/8"
6 5/16"
R 3/8" TYP.
51. STIFFENER
SCALE 1:5
The Texas A&M University System
Revisions:
No. Date By Chk
1.
2.
3.
4.
5.
Texas Transportation Institute
College Station, Texas, 77843
Date 2009-06-22
Drawn By GES
Scale 1:13
Sheet No. 31 of 32
Project No. 429739 TxDOT
Impact Pier - parts e
TxDOT Bridge Pier
T:\2008-2009\429739 TxDOT Bridge Pier\SolidWorks\Drawings\Full Set

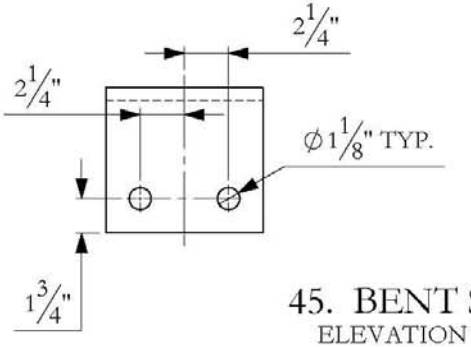

45. BENT STRAP

ELEVATION VIEWS
A572 Gr. 50

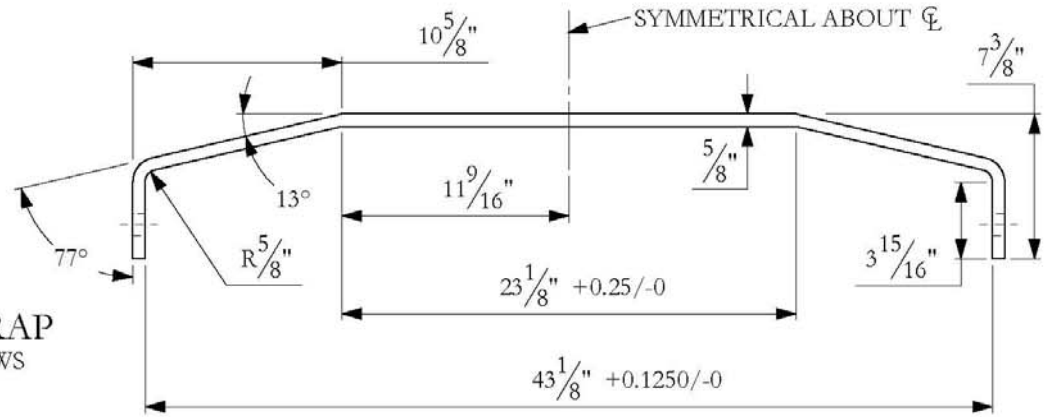

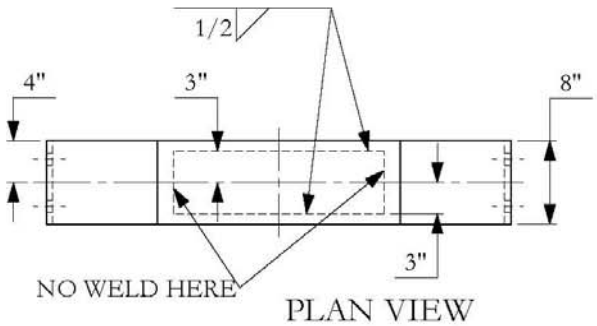

PLAN VIEW

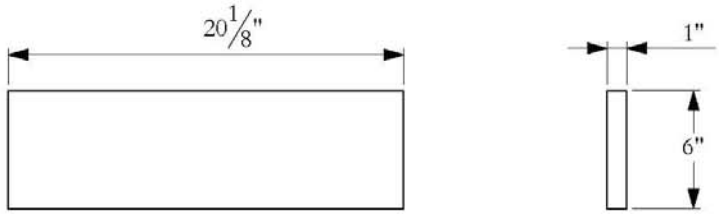

44. STRAP

A572 Gr. 50

STRAP ASSEMBLY

SCALE 1:5

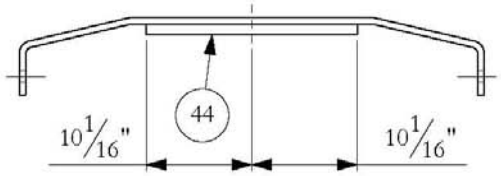

ELEVATION VIEW

1. ALL WELDING BY CERTIFIED WELDER.

The Texas A&M University System							
Revisions:				Texas Transportation Institute College Station, Texas, 77843			
No.	Date	By	Chk	Date	Drawn By	Scale	Sheet No.
1.				2009-06-22	GES	1:8	32 of 32
2.							
3.				Project No.	Impact Pier - parts f		
4.				429739 TxDOT			
5.				TxDOT Bridge Pier			

T:\2008-2009\429739 TxDOT Bridge Pier\SolidWorks\Drawings\Full Set