TF
23
.U68
A34
NO.
FRA-
ORD-
79-13

T FRA/ORD-79-13

A STRUCTURAL SURVEY OF CLASSES OF VEHICLES FOR CRASHWORTHINESS

FINAL REPORT

EDWARD WIDMAYER

DEPARTMENT OF
TRANSPORTATION
OCT 4 1979
LIBRARY

FEBRUARY 1978

Document is available to the public through the
National Technical Information Service
Springfield, Virginia 22151

Prepared for

U.S. DEPARTMENT OF TRANSPORTATION

Transportation Systems Center
Cambridge, Mass. 02142

NOTICE

This document is disseminated under the sponsorship of the Department of Transportation in the interest of information exchange. The United States Government assumes no liability for its contents or use thereof.

The United States Government does not endorse products or manufacturers. Trade or manufacturers' names appear herein solely because they are considered essential to the object of this report.

TF
23
.U68A34
no.
FRA-
ORD-
79-13

Technical Report Documentation Page

1. Report No. DOT-FRA/ORD-79-13	2. Government Accession No.	3. Recipient's Catalog No.
4. Title and Subtitle A Structural Survey of Classes of Vehicles for Crashworthiness — Final Report		5. Report Date February 1978
		6. Performing Organization Code 8-2791
7. Author(s) Edward Widmayer		8. Performing Organization Report No. DOT-TSC-FRA-79-13
9. Performing Organization Name and Address Boeing Vertol Company P.O. Box 16858 Philadelphia, PA 19142		10. Work Unit No. (TRAIS)
		11. Contract or Grant No. DOT-TSC-856
12. Sponsoring Agency Name and Address Department of Transportation Transportation Systems Center Cambridge, Mass. 02142		13. Type of Report and Period Covered June 1974 — Dec 1977 Final Report
		14. Sponsoring Agency Code TSC-744

15. Supplementary Notes

16. Abstract

This document reviews three phases of a study conducted to evaluate and improve the crashworthiness of passenger carrying vehicles in intercity service. Phase I surveyed the accident data over a period 1966 to 1973 and identified those areas responsible for the majority of accidents involving human injury (both operating personnel and fare-paying passengers). An analysis was also conducted on the structural integrity of a commuter car — identified as the single largest source of injuries in the subject time frame. Phase II extended the structural survey to the caboose and the locomotive cab. Phase III developed a potential design for crash survivable locomotive cab and included both static and dynamic analyses of the crash scenarios. The design is predicated about the provision of a "Survivable Volume".

DEPARTMENT OF TRANSPORTATION
OCT 4 1979
LIBRARY

17. Key Words Crashworthiness Crash Scenario Structural Analysis Dynamics	18. Distribution Statement DOCUMENT IS AVAILABLE TO THE U.S. PUBLIC THROUGH THE NATIONAL TECHNICAL INFORMATION SERVICE, SPRINGFIELD, VIRGINIA 22161

19. Security Classif. (of this report)	20. Security Classif. (of this page)	21. No. of Pages	22. Price
Unclassified	Unclassified	127	

Form DOT F 1700.7 (8-72) Reproduction of completed page authorized

PREFACE

The Federal Railroad Administration (FRA), as part of the United States Department of Transportation, is providing funds aimed at programs to improve railroad safety. The Transportation Systems Center (TSC) is providing the technical support for these programs. As part of these programs, TSC is conducting technical analyses and experimental studies of several classes of rail vehicles involved in collisions, derailments and other accidents. Initial efforts are directed toward a structural survey and analyses of several classes of rail vehicles and preparation of a program plan to enhance their crashworthiness.

In July of 1974 TSC contracted with the Boeing Vertol Company (Boeing) to perform a 3 phase study on the crashworthiness of several classes of rail vehicles. Efforts were directed to the primary impact area and included initial collision dynamics and the maintenance of a survivable occupant environment. Tasks to be completed were a search for relevant data in accident reports, detailed analyses of different rail vehicles, and development of a potential design to incorporate the recommendations from one of the vehicle studies (the locomotive cab).

This document is the final report which provides a summary of the tasks accomplished under each phase of the contract and makes recommendations for the implementation of steps to improve the structural integrity of future passenger carrying rail vehicles.

The authors take this opportunity to acknowledge the contributions to the study made by Drs. A. R. Rabb, Pin Tong, A. Kish and Messrs. D. P. McConnell and How Wong of the Transportation Systems Center, U.S. Department of Transportation, Cambridge, Massachusetts.

Contributions from Electromotive Division of General Motors, manufacturer of the GP-40 locomotive, and International Car Company, manufacturer of the sliding sill caboose are also recognized.

METRIC CONVERSION FACTORS

Approximate Conversions to Metric Measures

Symbol	When You Know	Multiply by	To Find	Symbol
		LENGTH		
in	inches	2.5	centimeters	cm
ft	feet	30	centimeters	cm
yd	yards	0.9	meters	m
mi	miles	1.6	kilometers	km
		AREA		
in^2	square inches	6.5	square centimeters	cm^2
ft^2	square feet	0.09	square meters	m^2
yd^2	square yards	0.8	square meters	m^2
mi^2	square miles	2.6	square kilometers	km^2
	acres	0.4	hectares	ha
		MASS (weight)		
oz	ounces	28	grams	g
lb	pounds	0.45	kilograms	kg
	short tons (2000 lb)	0.9	tonnes	t
		VOLUME		
tsp	teaspoons	5	milliliters	ml
Tbsp	tablespoons	15	milliliters	ml
fl oz	fluid ounces	30	milliliters	ml
c	cups	0.24	liters	l
pt	pints	0.47	liters	l
qt	quarts	0.95	liters	l
gal	gallons	3.8	liters	l
ft^3	cubic feet	0.03	cubic meters	m^3
yd^3	cubic yards	0.76	cubic meters	m^3
		TEMPERATURE (exact)		
°F	Fahrenheit temperature	5/9 (after subtracting 32)	Celsius temperature	°C

Approximate Conversions from Metric Measures

Symbol	When You Know	Multiply by	To Find	Symbol
		LENGTH		
mm	millimeters	0.04	inches	in
cm	centimeters	0.4	inches	in
m	meters	3.3	feet	ft
m	meters	1.1	yards	yd
km	kilometers	0.6	miles	mi
		AREA		
cm^2	square centimeters	0.16	square inches	in^2
m^2	square meters	1.2	square yards	yd^2
km^2	square kilometers	0.4	square miles	mi^2
ha	hectares (10,000 m^2)	2.5	acres	
		MASS (weight)		
g	grams	0.035	ounces	oz
kg	kilograms	2.2	pounds	lb
t	tonnes (1000 kg)	1.1	short tons	
		VOLUME		
ml	milliliters	0.03	fluid ounces	fl oz
l	liters	2.1	pints	pt
l	liters	1.06	quarts	qt
l	liters	0.26	gallons	gal
m^3	cubic meters	35	cubic feet	ft^3
m^3	cubic meters	1.3	cubic yards	yd^3
		TEMPERATURE (exact)		
°C	Celsius temperature	9/5 (then add 32)	Fahrenheit temperature	°F

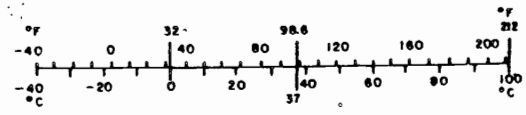

TABLE OF CONTENTS

		Page
1.	INTRODUCTION	1–1
2.	ACCIDENT DATA REVIEW	2–1
3.	STRUCTURAL REVIEW OF VEHICLE CLASSES	3–1
	3.1 Self Propelled Passenger Cars	3–1
	3.2 Caboose Structural Analysis	3–22
	3.3 Locomotive Structural Analysis	3–31
4.	COLLISION DYNAMICS	4–1
5.	TEST RECOMMENDATIONS	5–1
6.	CRASHWORTHY DESIGN DEVELOPMENT (LOCOMOTIVE)	6–1
7.	CONCLUSIONS AND RECOMMENDATIONS	7–1
	7.1 Conclusions	7–1
	7.2 Recommendations	7–2
8.	REFERENCES	8–1
9.	APPENDIX – REPORT OF NEW TECHNOLOGY	9–1

LIST OF FIGURES

Figure		Page
1–1	Program Flow Chart	1–2
2–1	Analysis of Crash Environment, Rear End Collisions	2–12
2–2	Analysis of Crash Environment, Head On Collisions	2–15
2–3	Overclimbs Versus Collisions, DOT-TSC-856	2–16
3–1	ICG Highliners	3–2
3–2	Highliner Crash Damage	3–4
3–3	ICG Highliner Underframe Description	3–6
3–4	Cab and Structure ICG High Liner	3–8
3–5	ICG Highliner 30 Mass Model Coupler Impact and Buffer Beam Impact	3–10
3–6	ICG Highliner 30 Mass Model Collision Post Impact and Truck Retention Model	3–11
3–7	ICG Highliner Force Deflection Curve (With No Shear Plate Failure)	3–12
3–8	ICG Highliner Force Deflection Curve (With Shear Plate Failure)	3–14
3–9	ICG Highliner Force Deflection Curve (Overclimb Case)	3–15
3–10	ICG Highliner – 4 Cars/Train Collision at 20, 40, 60, and 80 MPH Total Car Crush of Impacting Load Car	3–16
3–11	IGC Highliner STKWKT Collision Post Model	3–18
3–12	Energy Absorbed by Collision Post vs Collision Post Area	3–19
3–13	System Cost Benefit Analyses Results	3–21
3–14	Bay Window Caboose	3–24
3–15	Caboose Major Structural Elements	3–26
3–16	Caboose Force-Deflection Curve Coupler to Coupler Impact – No Override	3–29

Figure		Page

3–17 Caboose Force-Deflection Curve Override by Locomotive 3–30

3–18 GP-40 Locomotive 3–33

3–19 GP-40 Major Structural Elements – GP-40 Locomotive 3–36

3–20 GP-40 Underframe – Endplate to Bolster 3–37

3–21 Longitudinal Section Through Underframe 3–38

3–22 Section C–C, Typical Underframe Cross Section 3–39

3–23 Section B–B, Bolster 3–40

3–24 Idealized Locomotive Draft Gear Force Deflection Curve 3–42

3–25 Locomotive Anticlimber and Hard Nose Hood 3–43

3–26 Cab Vertical Yield Load and Energy Absorption Capability 3–45

3–27 Short Hood Longitudinal Yield Load and Energy Absorption Capability 3–46

3–28 Locomotive Force Deflection Curve Coupler-to-Coupler Impact – No Override 3–49

3–29 Locomotive Force Deflection Curve – Override of Locomotive Underframe – No Truck Retention 3–50

3–30 Locomotive Force Deflection Curve – Override of Locomotive Underframe – Truck Retention 3–51

3–31 Possible Structural Layout for Baseline Crashworthy Cab 3–53

4–1 Caboose Locomotive Impact – Locomotive Overrides Caboose 4–4

4–2 Caboose Locomotive Impact – Caboose Overrides Locomotive 4–5

4–3 Caboose Rigid Body Dynamics Model – Three Degrees of Freedom . . . 4–6

4–4 Caboose – Locomotive KRASH Model 4–10

4–5 Caboose Underframe – Vertical Deflection 4–13

6–1 Collision Fatality Distribution Versus Closing Speed 6–2

Figure		Page
6–2	Single Degree of Freedom System	6–2
6–3	Crash Station	6–3
6–4	Cab Frame KRASH Model	6–4
6–5	Strain Energy Distribution (%)	6–5
6–6	Final Design	6–6

LIST OF TABLES

Table		Page
2–1	Data Sources	2–3
2–2	Data Content	2–4
2–3	Collision Train Accidents 1966–1973, Source: FRA Accident Bulletins No. 135 to No. 142	2–5
2–4	Boeing Vertol 166 Sample Versus FRA Accident Bulletin	2–7
2–5	Injury Criteria	2–9
2–6	72 Rear End Collisions	2–10
2–7	166 Accident Sample Rear End Collision Crash Dynamics	2–11
2–8	166 Accident Sample Head End Collision Crash Dynamics	2–13
2–9	166 Accident Sample Derailment Crash Dynamics	2–17
2–10	Summary of Injuries – All Types of Collisions and Derailments	2–18
2–11	166 Accident Sample Crushing Fatalities by Car Type	2–19
2–12	Structure Involved in Crashes	2–20
3–1	Load and Energy Characteristics	3–7
3–2	Caboose Failure Load and Energy Characteristics	3–27
3–3	Locomotive Load and Energy Characteristics	3–47
4–1	Collision Dynamics Methods and Parameters	4–3
4–2	Three Degrees of Freedom Rigid Body Principal Results	4–9
4–3	KRASH Program Results	4–12
6–1	Design Conditions	6–1
6–2	Model Features and Limitations	6–7

1. INTRODUCTION

As part of a program aimed at improving railroad safety and efficiency through safer rail equipment Transportation Systems Center (TSC) has provided technical support to the Federal Railroad Administration. The program has been developing the technological basis for equipment performance specifications in rail vehicle crashworthiness. TSC and supporting contractors have conducted technical analyses and experimental studies of several classes of rail vehicles involved in collisions, derailments and other accidents, directed towards maintaining a survivable occupant environment and reducing equipment damage that may result from such accidents. Initial efforts have been focused on a structural survey and analysis of several classes of rail vehicles and preparation of a program plan for enhancing their crashworthiness.

As part of the overall program under the Transportation Systems Center, the study reported in this document uses technology from many programs sponsored by FRA, UMTA, AAR/RPI and the aerospace industry. The cross-feed of technology from those programs to this study has been beneficial.

- The FRA sponsored Rail Safety/Equipment Crashworthiness (DOT-TSC-821) has also acquired accident data and occupant injury criteria.

- The Locomotive Cab Design Development program (DOT-TSC-913 and DOT-TSC-1330) has provided crew operational requirements for integration into the locomotive cab protection system.

- The train collision tests (DOT-TSC-840), the DOT-TSC-853, and the AAR/RPI tank car collision tests have provided insight into the mechanism of overclimbing and collision dynamics.

- The UMTA programs assessing the crashworthiness of existing urban rail vehicles (DOT-TSC-681) and the State of the Art Car (DOT TSC-791) have provided useful analytical methods.

- Non-linear structural analysis computer technology has been applied to the design of crash resistant structure.

The study is divided into three phases. Figure 1-1 shows the major steps in the program.

Phase I is divided into three major elements:

- Establishment of a data base through a review of the accident data;

- Identification of the principal factors in crashworthiness and personnel injury; prioritization of vehicles for study; and definition of candidate improvements in terms of the cost/benefit relationship;

- Detailed analysis of a commuter car (the Illinois Central Gulf, ICG Highliner) for improvement of crashworthiness. The Illinois Central and Gulf Railroad provided engineering design data for the Highliner car built by St. Louis Car Company. The

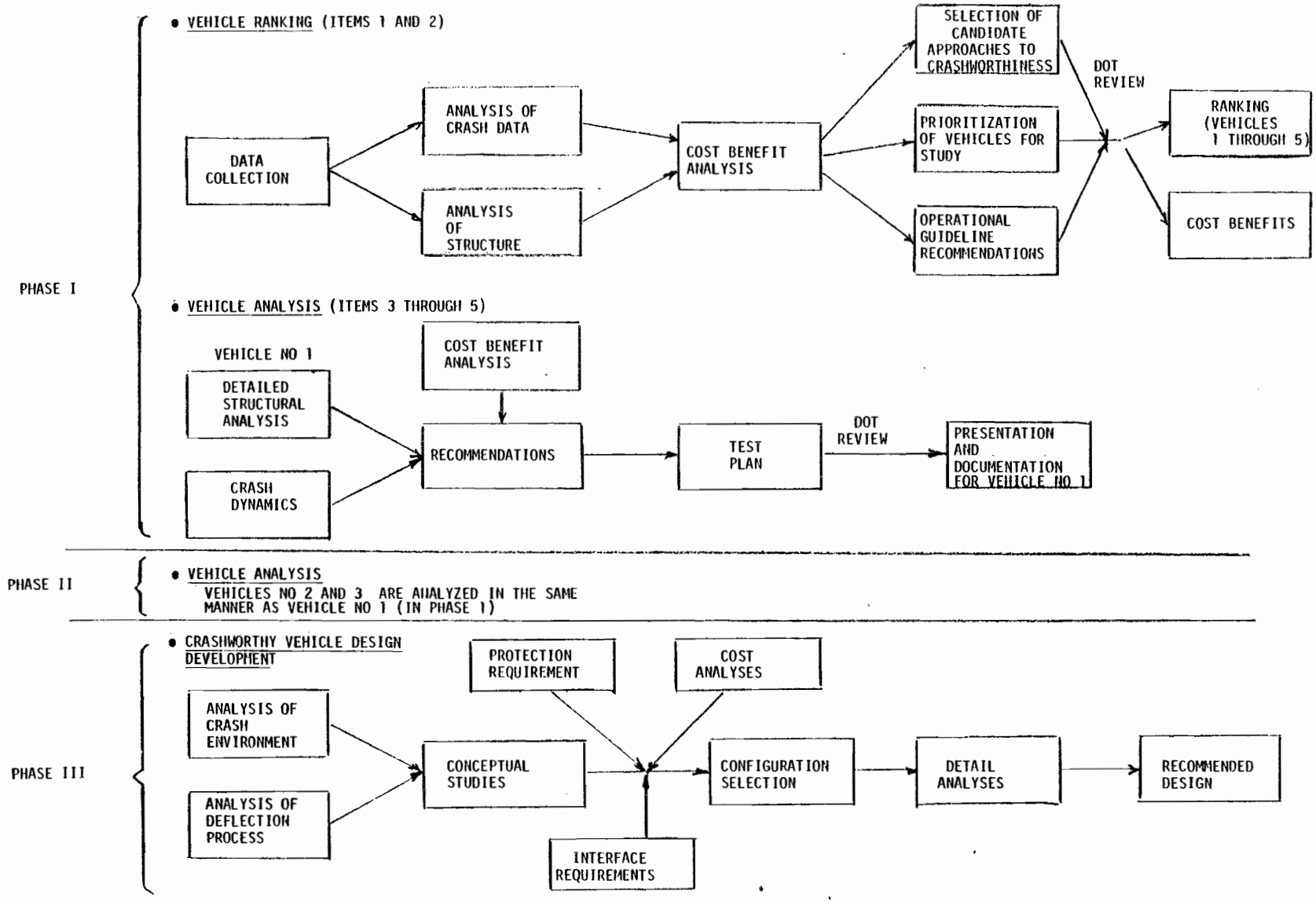

Figure 1–1. Program Flow Chart

Highliner meets the FRA regulations for intercity passenger service and is representative of cars currently being introduced into service.

Phase II provides the detailed crashworthiness analysis of a locomotive and a caboose. For this purpose the Electromotive Division of General Motors Corp. (EMD) and the International Car Company provided technical assistance as subcontractors to the Boeing Vertol Company.

EMD provided engineering data for the GP-40 locomotive. This locomotive is representative of the platform locomotive. EMD produces 85% of the locomotives manufactured in the United States. International Car Company provided engineering data on the Bay Window Caboose. International Car is a major manufacturer of cabooses in the United States.

Phase III effort was directed to the design of a structurally crashworthy locomotive cab. The design treats a deflection shield system suitable for concept validation testing and through mathematical modelling provides analyses both static and dynamic to assist in the detail specifications of the required structures.

The objectives of the program have been met. The studies provide visibility into the general status of crashworthiness of rail vehicles and form a basis for future studies. An overview of the program results is given here. More detailed results are given in the interim scientific reports.

The accident data review has used all available data for the identification of the crash environment. It was found that the FRA reporting system emphasized operation aspects of collisions and that engineering data was generally lacking. However, the cause of fatalities in train collisions and derailment and role of the structure in these fatalities has been established. Override is shown to be the principle cause of the fatalities and occurs over the full range of closing velocities.

On the basis of total fatalities locomotives were found to be the most lethal vehicle. The passenger car ranked second in fatalities. However in this case one accident contributed 90% of the fatalities. Cabooses ranked third with the least fatalities. This is attributed in part to the crashworthiness of the caboose structure and in part to the fact that the caboose would mainly be unoccupied when the train is standing.

Specifications for the design and testing of these vehicles were reviewed. It was found that the specifications dealt principally with strength and performance requirements. Anticlimbers are optional and collision posts are required by FRA regulations only for passenger cars. The manufacturers provide collision posts in many instances for locomotives and cabooses, but for the locomotive these are inadequate for train collisions. Generally crashworthiness is not specifically treated.

Using the accident data an assessment was made of the role of structure in the crashworthiness of rail vehicles. The locomotive underframe was deemed to be good, while the collision posts and the cab structure were poor. The anticlimber and couplers also could be improved. The coupler should engage and lock on impact and should prevent excessive relative vertical motion. The caboose has good crashworthiness properties, but might be improved by using truck retention and an improved coupler. The passenger car has a fair underframe requiring improved load paths. The anticlimber, collision posts, and truck retention also could be improved.

Cost benefit studies have been conducted to ascertain the best approach to achieving crashworthiness in these vehicles. For passenger cars in commuting service a systems analysis was conducted. Factors such as operating speeds, train size, restriction of car volume, and increased car strength were treated. For locomotives and cabooses increased strength and buffer vehicles were considered. The structural approach was most cost effective.

A detailed structural study of the Illinois Central and Gulf Railroad Highliner was conducted. Collision post improvement could be obtained by increasing the post cross-section by a factor of 2.25. In addition, the post attachment to the underframe and to the roof should be improved to develop the strength of the draft sills and of the roof. The path to help distribute collision loads from the anticlimber to the side sill could be improved. This may be obtained by redundant shear plates, improved welds, and increased shear capability at the bolsters. Crashworthiness may be increased by improved truck retention and raising the buff strength of the underframe. Further, all passenger cars should have anticlimbers.

While the above assessment resulted from a detailed analysis of the Highliner structure, there is a certain common theme with other passenger vehicles. Comparing the above results with those obtained for the UMTA State of the Art Car the similarity is seen. Both cars were involved in collisions and were subject to similar engineering analyses for crashworthiness. Both cars met their respective design and test specifications. The recommendations to improve crashworthiness are almost identical.

The implication of this is that current specification procedures and design practices do not result in developing the potential crashworthiness of the passenger cars. Clearly, there is a requirement to develop specifications that will cause the crashworthiness to be incorporated into the vehicles.

The structural analysis of the caboose shows that commercially available caboose is a crashworthy vehicle. There are no industry standards, recommended practices, or regulations pertaining to structural requirements. Consequently, there may be cabooses in service that have substantially less crashworthiness than the object of this study.

Further, there are indications that the introduction of truck retention would decrease the tendency of the caboose to override the colliding locomotive. This feature could be easily installed. In the same vein, the use of shelf lock couplers that if engaged in impact would lock and prevent disengagement through large relative vertical displacements could help prevent override. However, the current state of technology in collision dynamics does not allow for a complete understanding of caboose override prevention. Further study of this problem is required.

The locomotive generates casualties due both to crushing and due to secondary impacts. The latter cause while not included in this study is worthy of mention. A comparison study (Reference 1—1) has treated the delethalization of the cab interior and the protection of the crew in non-crushing situations. The crushing casualties arise from the override of the locomotive by cabooses, freight cars and other locomotives.

Reference 1—1. Reilly, J.M.; Safety/Equipment Crashworthiness — Executive Summary, FRA/ORD-77/3 IV, DOT-TSC-821-4, November, 1978.

The analysis of the locomotive showed that the cab and superstructure of the locomotive are seriously understrength as compared to the structure of the overriding vehicle. Even for cabooses and freight cars the cab is understrength by a factor of 5. As a consequence of this the major effort was directed to increasing the resistance of the cab crushing.

In this effort, individual elements were examined and treated separately. It was concluded that all cab superstructure members should be provided with a load path to the underframe. Slanted stronger collision posts were required, with adequate attachment to the roof with antitelescoping plates, and to the underframe. The sides and roof structure should provide rollover protection. Welds and joints should allow maximum load development of attaching members. To prevent penetration of the cab volume, a hard nose plate with adequate support should be provided. To help prevent override, better anticlimbers and shelf locking couplers should be provided.

The detailed structural analysis of the locomotive was accomplished in Phase II of the study (Reference 1–2). The results of the study and the recommended improvements strongly suggest that an integrated design of the forward structure of the locomotive with a deflecting shield might provide a means for achieving crashworthiness.

Phase III of the program selected the locomotive cab for further detailed study (Reference 1–3). The study was directed to the design of a deflecting system including the deflection shield, the cab protective superstructure, and the forward section of the underframe. The tasks accomplished in this phase consisted of analytical studies to establish the crash environment and to develop a simple dynamic analysis of the deflecting process. Based on these studies, the design requirements for the protection structure including constraints imposed by operational service such as weight, space, visibility, and egress; system functional requirements; and the interface with the underframe were established.

From these requirements conceptual approaches to cab protection and candidate configuration were identified. These configurations were assessed and a candidate for further analysis was selected. A detailed study of this configuration and recommendations for full scale testing of the protective systems were made.

In the following sections of this report a review of the results of the program are presented in synoptic form. The details of the study are given in the Interim Scientific Reports.

The final section of this report provides recommendations on methods and techniques that may be utilized to improve the crashworthiness of vehicles of all classes with special reference to the locomotive which came under detailed study.

Reference 1–2. Kesack, W.J.; Widmayer, E.; Locomotive and Caboose Crashworthiness Analysis, DOT-TSC-856-2.

Reference 1–3. Widmayer, E.; Structural Design of a Crashworthy Locomotive, DOT-TSC-856-2.

2. ACCIDENT DATA REVIEW

2.1 SUMMARY AND INTRODUCTION

The review of the accident data involved two major tasks. The first task was to assemble, review and analyze the literature and accident data related to various classes of rail vehicles involving train to train collisions. The second task was to summarize the data, apply cost benefit methods, define the crash environment and costs, assess the structural crashworthiness, rank the vehicles for further study, and provide operational guidelines.

A comprehensive data review was conducted. Generally it was found that the accident reports did not provide useful engineering data. The most useful source was photographs of damaged vehicles. From all reports and sources investigated 166 cases had some analyzable data for use in this study.

From these cases, it was found that override and the resulting loss of structural volume was the major cause of fatalities. Override was observed to occur throughout the speed range. Only fatalities resulting from loss of volume were treated in this analysis. Fatalities arising from secondary impact with the vehicle interior were excluded. It was found that most fatalities occurred in locomotives, followed by passenger cars and cabooses. However, in the case of passenger cars, 90% of those fatalities occurred in one accident.

An assessment of the crashworthiness of structural components was made. The principal elements were the underframe and the superstructure. The assessment is shown below.

Type Car	Underframe	Superstructure
Locomotive	Good	Poor
Caboose	Good	Good
Passenger Car	Fair	Poor

In this process, collision posts were included in the superstructure.

A review of the vehicle specifications was made. It was concluded that the design specifications and test procedures do not adequately treat the crash failure modes of the vehicle. It was also concluded that structural improvements will extend the crashworthiness of the rail vehicles Some operational guidelines for improved crashworthiness are identified and discussed.

While a prioritization of vehicles was produced for the order of study, it was more compatible with the program objectives to change the order of study. The Illinois Central and Gulf Highliner was selected for first study because of the serious accident involving 45 fatalities. The locomotive and caboose were second and third. The lowest ranked vehicles were the intercity passenger car and the Amtrak Bi-level cars.

In this chapter is presented in summary form the salient data that supports the above findings. The details of this summary are given in Reference 2–1.

Reference 2–1. Kesack, W.J.; Ross, R.; Widmayer, E.; A Structural Survey of Classes of Vehicles, DOT-TSC-856-1, Volume I, Accident Data Review – Interim Scientific Report, July, 1975.

2.2 BACKGROUND

2.2.1 Accident Data

Railroad accident data were collected from many different sources as detailed in Table 2-1.

The main sources of data were the FRA, NTSB, AAR and General Electric Co. The period selected for analysis was 1966-1973 – a period when reporting was most complete. The reports that were obtainable covered this period. Boeing Vertol has in its possession all available railroad accident reports published by the Federal Government for this period. DOT Report (Reference 2–2) and AAR Report (Reference 2–3) supplement these formal reports. Table 2–2 shows the type and content of data that were included in the data bank for this study.

From the standpoint of structural crashworthiness, the data are lacking in details of structural deformation, human injury/fatality causes, accident dynamics and detailed damage costs. The photographs are the primary source of structural data. Estimates of damage, structural deformation, loss of survivable volume can be made from these photographs. Much of the collision dynamics determinations are also made from the photographs when word descriptions in the reports do not adequately detail the dynamics.

General accident statistics are obtained from the FRA Accident Bulletins. For the years 1966 to 1973, Bulletin Nos. 135 to 142 were used to present the total railroad accident statistics. The FRA rules and regulations require that railroad properties submit monthly accident reports. These are the so-called "T" form reports.

The first objective in the accident data review was to reduce the total accident sample to a sample of accidents involving collisions between trains in which casualties occurred. That sample was then further reduced by eliminating those accidents for which insufficient data were available for the determination of crashworthy factors such as collision dynamics and the structural performance.

Starting with a total sample of 178,548 railroad accidents for the years 1966 to 1973 the sample was reduced to 166 accidents for detailed study. First to be eliminated from the sample were 155,585 train service accidents. These accidents do not treat train-train collisions or derailments but deal with grade crossing and other categories.

The remaining sample consists of 62,963 train accidents – 12,901 collisions, 44,403 derailments and 5,659 other accidents. The 12,901 collision accidents result in 214 fatalities and 2,417 injuries. From Table 2-3 it can be seen that rear-end and head-on collisions have the greatest average damage value per collision.

Reference 2–2 Kurz, F.; Identification and Categorization of Accidents and Injuries in Cabs of Locomotives, FRA-OPP-73-3, Department of Transportation, Federal Railroad Administration, Washington, D.C., September, 1972.

Reference 2–3. Hawthorne, K.L.; A Preliminary Study of Head-On and Rear-End Collisions Involving Locomotives, V-804-74-01, Association of American Railroads for Locomotive Control Compartment Committee, Washington, D.C., January, 1974.

Table 2–1. Data Sources

FEDERAL RAILROAD ADMINISTRATION	(FRA)
OFFICE OF SAFETY OFFICE OF POLICY AND PLANS	
NATIONAL TRANSPORTATION SAFETY BOARD	(NTSB)
NATIONAL RAILROAD PASSENGER CORPORATION	(AMTRAK)
ASSOCIATION OF AMERICAN RAILROADS	(AAR)
PENN CENTRAL	
ELECTROMOTIVE DIVISION - GENERAL MOTORS	(EMD)
INTERNATIONAL CAR COMPANY	
GENERAL ELECTRIC - TRANSPORTATION SYSTEMS	
FAA CIVIL AEROMEDICAL INSTITUTE	(CAMI)
WAYNE STATE UNIVERSITY	
NORFOLK AND WESTERN RAILROAD	
ILLINOIS CENTRAL GULF RAILROAD	

Table 2–2. Data Content

	SOURCE	MATERIAL	
1	FRA	ACCIDENT BULLETIN	STATISTICS ONLY, NO CORRELATION TO SPECIFIC ACCIDENT
2.	FRA	T FORMS	ONLY 2 YRS AVAIL. AT FRA, OTHERS DISPOSED
3	FRA	T FORM TAPES	8 YRS
4	NTSB	RR ACCID'T REP'T	14 DERAILMENTS, 6 HEADON, 4 REAR END, 2 OTHERS. LITTLE STRUCTURAL DETAIL.
5	NTSB	DOCKETS	NOT ALL DOCKETS ON FILE AT NTSB
6	FRA	ACCID'T REP'T	7 DERAILMENTS, 9 HEADON, 19 REAR END, 6 OTHERS. LITTLE STRUCTURAL DETAIL.
7	FRA	JACKETS	-
8	FRA	ACCID'T SUMM'Y REP'T	8 DERAILMENTS, 2 HEADON, 16 REAR END, 5 OTHERS. LOW STRUCTURAL DETAIL
9	FRA	PHOTOS (166)	PRIMARY SOURCE OF STRUCTURAL DETAILS CORRELATABLE ONLY THROUGH FRA JACKET NO.
10	CTI/FRA	FRA-OPP-73-3 (Ref. 2-1)	LOCO ONLY, STATISTICS ONLY, OVERCLIMB NOTED 66 DERAILMENTS, 71 HEADON, 85 REAR END, 60 OTHERS.
11	AAR	V-804-74-01 (Ref. 2-2)	SAME CASES AS IN CTI, SOME CORRECTIONS. SOURCE OF LOCO CRASH STRUCTURAL DETAIL 31 HEADON, 46 REAR END.
12	GE ERIE	GENETTI PHOTO BANK	PRIMARY SOURCE OF STRUCTURAL DETAIL CORRELATABLE TO AAR REP'T.

Table 2–3. Collision Train Accidents: 1966-1973 Source: FRA Accident Bulletins No. 135 to No. 142

	COLLISIONS				
	REAR END	HEAD ON	SWITCHING	OTHER	TOTAL
NUMBER ACCIDENTS	332	220		1,911	12,901
TOTAL $ DAMAGE (MILS.)	19.20	25.64	46.68	32.70	124.22
AVERAGE $ DAMAGE PER COLLISION	57,831	116,665	4,472	17,112	9,629
PERSONS KILLED	*	*	*	*	214
PERSONS INJURED	*	*	*	*	2,417
EMPLOYEE ON DUTY KILLED	*	*	*	*	161
EMPLOYEE ON DUTY INJURED	*	*	*	*	1,352

*Data not broken down into specific categories for collisions. However, an analysis of the computer tapes has shown that rear-end and head-on collisions account for most of the fatalities that occurred in collisions.

In the collision environment, there are four categories of accidents, rear end, head on, switching and other. The switching and other category have a low average dollar damage cost/accident as compared to head on and rear end accidents. Also, it is implicit that switching collisions are limited to low speeds. It is logical to assume that the greater number of casualties and highest damage dollar costs would occur at higher speeds. Therefore the switching and other category were eliminated from further study. Therefore, the Data Base is composed of those train accidents on which there was available more information than just a "T" Form.

The seriousness of the accident determines whether a report is issued. FRA Guidelines for conducting investigations and issuing public reports are to investigate rail transportation accidents/incidents which result in the death of a railroad employee or the injury of five or more persons or if it appears that an investigation would substantially serve to promote railroad safety. The NTSB guidelines for participation in accident investigations are those accidents which are (1) catastrophic in magnitude, (2) of general public interest, (3) involve questions of broad national interest, or (4) which may involve unique technical problems. The NTSB at its option may conduct the investigation, participate in or delegate authority to conduct the investigation. When the NTSB investigates an accident, they will issue the Accident Report and the FRA will not. The NTSB has issued 26 railroad Accident reports during the period 1966-1973. They include 6 head-on, 4 rear-end, 14 derailment, and 2 other accidents.

The FRA has issued 41 Railroad Accident Investigation Reports including 9 head-on, 19 rear-end, 7 derailments, and 6 others. The FRA has also issued 31 Railroad Accident Investigation Summary reports divided into 2 head-on, 16 rear-end, 8 derailments and 5 others.

The above 98 accidents can logically be assumed to be the most serious railroad accidents for the period 1966-1973. In addition to these 98 have been added 68 other accidents. This total of 166 accidents is the Data Base that is used for this study.

Table 2-4 shows the study sample significance. For the investigation of collisions and derailments, the study has accumulated data on 124 collision accidents which include 78% of all collision fatalities and the average damage dollar cost was 400 percent higher than the total rear end and head on collision average cost. The study derailment sample shows the same relationships. Fourteen percent of the derailment fatalities with an average damage dollar cost 2,200% higher is included while only having 0.06 percent of the total sample available. It is felt that the sample is a most significant one and that the accident data available was for the most serious accidents containing the most data that could be used in this study.

Considering the Data Base Accident Type distribution by type train and type cars involved, the distribution of accidents compares favorably with the complete listing by FRA. Freight train collisions account for 68% of total FRA collision while in the Boeing sample they account for 85.4%. The FRA category of "other" collisions accounts for 31% of the FRA total, while passenger train collisions and freight-to-passenger train collisions account for less than 1% of the total FRA listing. This sample does not include an "other" category. Passenger train collisions are 8.1% and passenger-to-freight train collisions are 6.5% of the total study sample.

The 166 accident sample contains 72 rear end collisions, 52 head end collisions, 29 derailments, and 13 other. When examined for type of vehicles involved it was found that

Table 2–4. Boeing Vertol 166 Sample Versus FRA Accident Bulletin

SAMPLE COVERAGE 1966 - 1973

	BOEING VERTOL 166 ACCIDENT SAMPLE	FRA ACCIDENT BULLETINS	BOEING VERTOL SAMPLE AS A PERCENTAGE OF FRA ACCIDENT BULLETIN
REAR END COLLISIONS	72 } 124	323 } 552	22 } 23
HEAD ON COLLISIONS	52	220	24
TOTAL FATALITIES IN COLLISIONS	167	214	78
AVERAGE COST/ COLLISION ACCIDENT	$323,000*	$81,231	400
DERAILMENTS	29	44,403	.06
TOTAL FATALITIES IN DERAILMENT	41	299	14
AVERAGE COST/ DERAILMENT ACCIDENT	$384,000**	$17,400	2,200
OTHER	13	5,659	.23
TOTAL FATALITIES IN OTHER ACCIDENT	11	821	1.34
AVERAGE COST/ACCIDENT	$397,000***	$5,583	7,120

*COST BASED ON ONLY 47 CASES WHERE INFORMATION WAS OBTAINABLE
**COST BASED ON ONLY 18 CASES WHERE INFORMATION WAS OBTAINABLE
***COST BASED ON ONLY 10 CASES WHERE INFORMATION WAS OBTAINABLE

locomotives were involved in 116 accidents, cabooses in 53 accidents and passenger cars in 18 accidents.

2.2.2 Occupant Injury Criteria

Fatalities and injuries are broken down into the four classifications shown in Table 2-5. The "primary" classification is only used for fatalities even though it is recognized that injuries, too, may be caused by the loss of structural volume. Primary classification involves the loss of structural volume, i.e., the structure was crushed and the loss of volume caused the fatality. The crush could be caused by different mechanisms, a climbing car, rollover, or penetration such as telescoping. Fatalties caused by these mechanisms are shown as primary fatalities.

2.2.3 Crash Environment and Costs

The crash environment of the sample study includes 52 head-on collisions, 72 rear-end collisions, and 29 derailments. The 13 accidents classified "other" are not included because primary structural failures were not involved in the fatalities that occurred.

2.2.4 Collisions

For rear end collisions the data was separated into type of trains involved, type of vehicle in the initial impact, the number of injuries and fatalities. Casualties were identified according to the injury criteria given in Table 2-5. In 72 rear-end collisions, there were 38 primary fatalities in locomotives, 3 in cabooses and 50 in passenger cars. However, 45 of those primary fatalities in passenger cars occurred in one accident.

The primary crash dynamics and structural damage are shown in Tables 2-6 and 2-7. Fifty percent of Loco-Caboose interactions resulted in the caboose climbing. The same percentage occurs for the loco-freight car interaction. In 32 cases where climbing occurred, the loco cab was crushed in 23 of them. It can be concluded that if a caboose or freight car climbs the locomotive, there is a 75% chance the cab will be crushed. Climbing occurs at all speed ranges both for caboose climbing and freight car climbing locomotives. Figure 2-1 shows the number of accidents exceeding and the number of fatalities that occurred for accidents exceeding a given closing velocity. This curve gives the benefits in terms of lives that can be saved, i.e., if the design criteria for speed is to provide designs that can survive a 50 mph accident (rear-end collision) a potential benefit is saving 92% of the fatalities that occur in the rear-end collisions.

The 52 head-end collisions are divided into type trains, type vehicles involved, number, classification and location of casualties. The primary crash dynamics are shown in Table 2-8. Twenty-four of the accidents or 52% involved climbing, with subsequent loco cab crushing in 60% of those accidents with climbing. As far as can be determined from the sample, overturning when it occurred, happened after the initial climb. Overturning in head-end collisions did not produce loco cab crushing or primary fatalities. Again, it is obvious that climbing is the principal crash dynamics mechanism that must be protected against in the quest for improving structural crashworthiness.

The classification of fatalities and injuries versus the crash dynamics of the head-on collision for the locomotive, caboose and passenger car show primary fatalities occurred only in the

Table 2–5. Injury Criteria

FATALITIES		
PRIMARY	-	CRUSHED STRUCTURE
SECONDARY	-	SECONDARY IMPACT
EXTERNAL	-	EVACUATED VEHICLE BY CHOICE
OTHER	-	FIRE, FUMES, ETC.
INJURIES		
PRIMARY	-	NO INJURIES ARE GIVEN IN THIS CLASSIFICATION
SECONDARY	-	SECONDARY IMPACT
EXTERNAL	-	EVACUATED VEHICLE BY CHOICE
OTHER	-	FIRE, FUMES, ETC.

Table 2–6. 72 Rear-End Collisions

TYPE CARS INVOLVED IN R.E. COLLISION INTERACTIONS	PRIMARY CRASH DYNAMIC						PRIMARY STRUCTURAL DAMAGE			
	CABOOSE CLIMB	FREIGHT CAR CLIMB	PAX CAR CLIMB	OVERTURN		OTHER OR UNKNOWN	LOCO CAB CRUSH	CABOOSE CRUSH	PAX CAR CRUSH	OTHER
				LOCO	CABOOSE					
52 Loco-Caboose	26	1	1**	3	1	20	*20	7		25
13 Loco-Freight Car		6		1		6	5			8
1 Pax Car-Freight Car		1							1	
6 Pax Car-Pax Car			1			5			1	
1 Caboose-Freight Car						1		1		

* 2 Crush due to overturn, 18 due to climbing

** Loco climbed caboose

Table 2–7. 166 Accident Sample Rear End Collision Crash Dynamics

72	REAR END COLLISIONS
	36 CASES OF CLIMBING
	* 26 CABOOSE CLIMB LOCO
	* 7 FREIGHT CAR CLIMB LOCO
	1 FREIGHT CAR CLIMB PASSENGER CAR
	1 PAX CAR CLIMB PAX CAR
	1 LOCO CLIMB CABOOSE
	5 CASES OVERTURN
	4 LOCO
	1 CABOOSE
	32 OTHER AND UNKNOWN

* 1 Accident had both occurrences

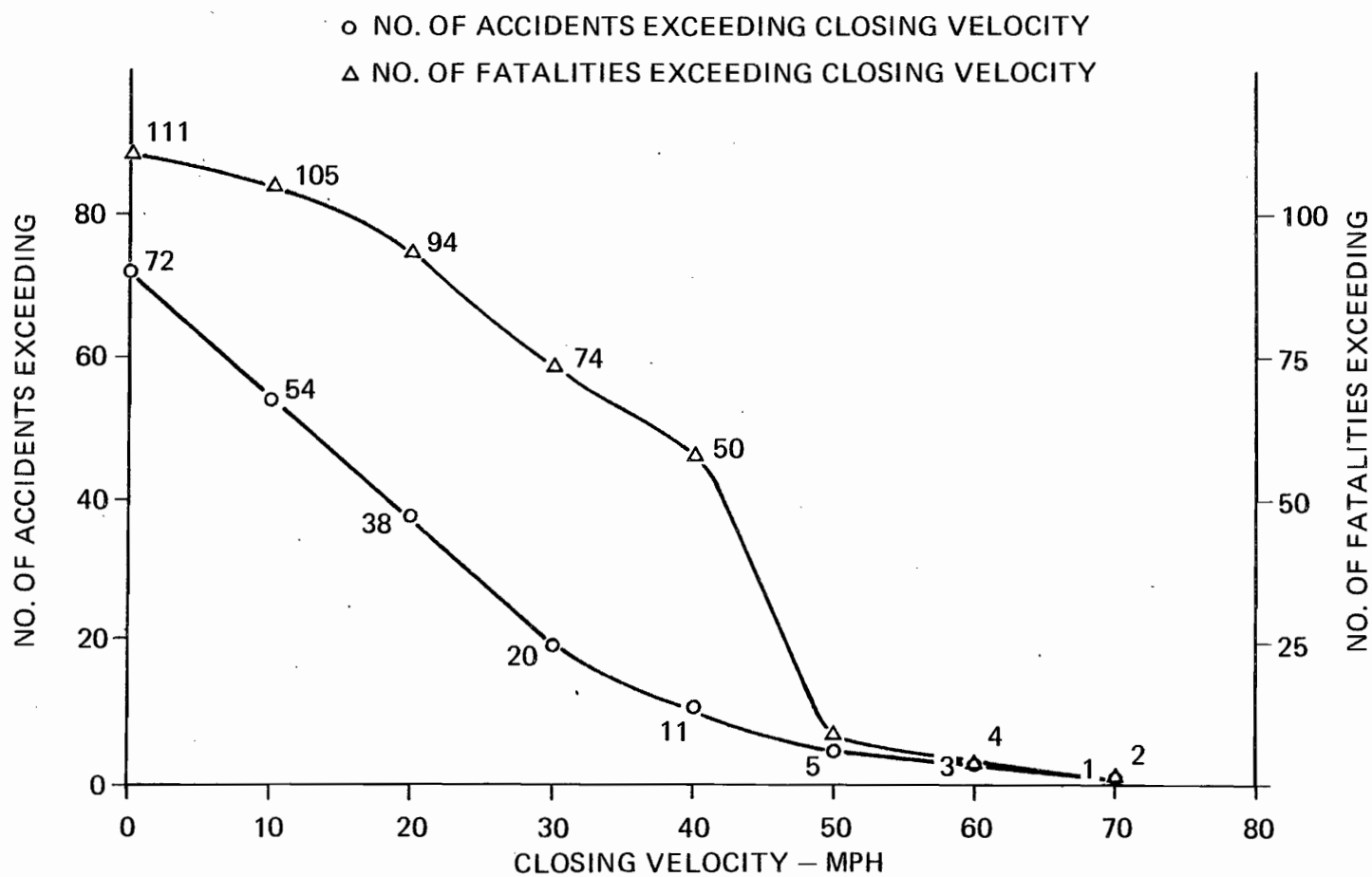

Figure 2–1. Analysis of Crash Environment Rear End Collisions

Table 2–8. 166 Accident Sample Head End Collision Crash Dynamics

52 HEAD END COLLISIONS

31 CASES OF CLIMBING

*18 CASES LOCO CLIMB LOCO

*11 CASES TRAILING LOCO CLIMB

2 PAX CAR CLIMB

(*7 ACCIDENTS HAD BOTH OCCURRENCES)

2 CASES OF OVERTURN

2 LOCOS O.T.

26 OTHER AND UNKNOWN

locomotive. This is deduced from the data because of the 52 head-end collision sample, 50 of them involved the loco-loco interaction. Most of the energy is then absorbed by the locos or as the loco climb past one another and continue to clear the path usually wiping out any structures that would cause damage (crushing) to the trailing cars. This can be seen as only 1 passenger elsewhere in a train was killed in a loco-loco interaction.

Again as with cabooses and freight cars, it is significant to note that climbing occurs randomly with respect to closing speed and no clear indication results that climbing will occur as a result of speed.

Figure 2-2 is the exceedance curve for head-end collisions. Head-end collisions do not have the same distribution as rear-end collisions, making it more difficult to pick a cutoff point for potential life saving benefits. At 50 mph 75% of the accidents have occurred but only 59% of the fatalities. Therefore, if the design point were to protect against 50 mph closing speed head-end collisions, the potential benefit in lives may only be a maximum of 59% of those killed.

For total collisions the casualties were classified according to the crash dynamics and according to vehicle. Telescoping and override was the principal cause of fatalities, regardless of the vehicle, accounting for 82%. Rollover accounted for 9% and "other" for 9%. Classified by vehicle the locomotive accounted for 62% of the fatalities from all causes, the passenger car 30%, and the caboose 8%.

The total incidence of overclimbing is shown in Figure 2-3 as a function of closing velocity for all types of collisions reviewed in the sample study.

2.2.5 Derailments

The 29 derailment accidents in this sample are broken down into type train, number location, (Table 2-9) and classification of casualties, speed, crash dynamics and structural damage are included in Table 2-10.

2.2.6 Analysis of Structure Involved

The role of structure in protecting the occupants was assessed from photographs of the damaged vehicles and from the descriptions in the accident reports. While the process is subjective in a particular accident, the same general behavior was observed for each class of accidents. The assessment is summarized in Table 2-11.

2.2.7 Ranking of the Vehicles

Three methods were used to arrive at a ranking of vehicles for potential benefit through improved crashworthiness. The first method ranks the vehicles in terms of total fatalities while the second method ranks according to primary fatalities. In both these rankings the locomotive is number one with passenger cars second and caboose third. The Amtrak Bi-Level is ranked fifth because it was a new car still in the proposal stage. These initial rankings are made independent of dollar costs in implementing the design or in repairing damage. The third ranking is done including dollar costs of the improvement as a function of the vehicle weight and using the fatalities caused by crushing, Table 2-12, and then applying these to a 1973 size vehicle fleet. In the third ranking the passenger car comes out number one by a wide margin with

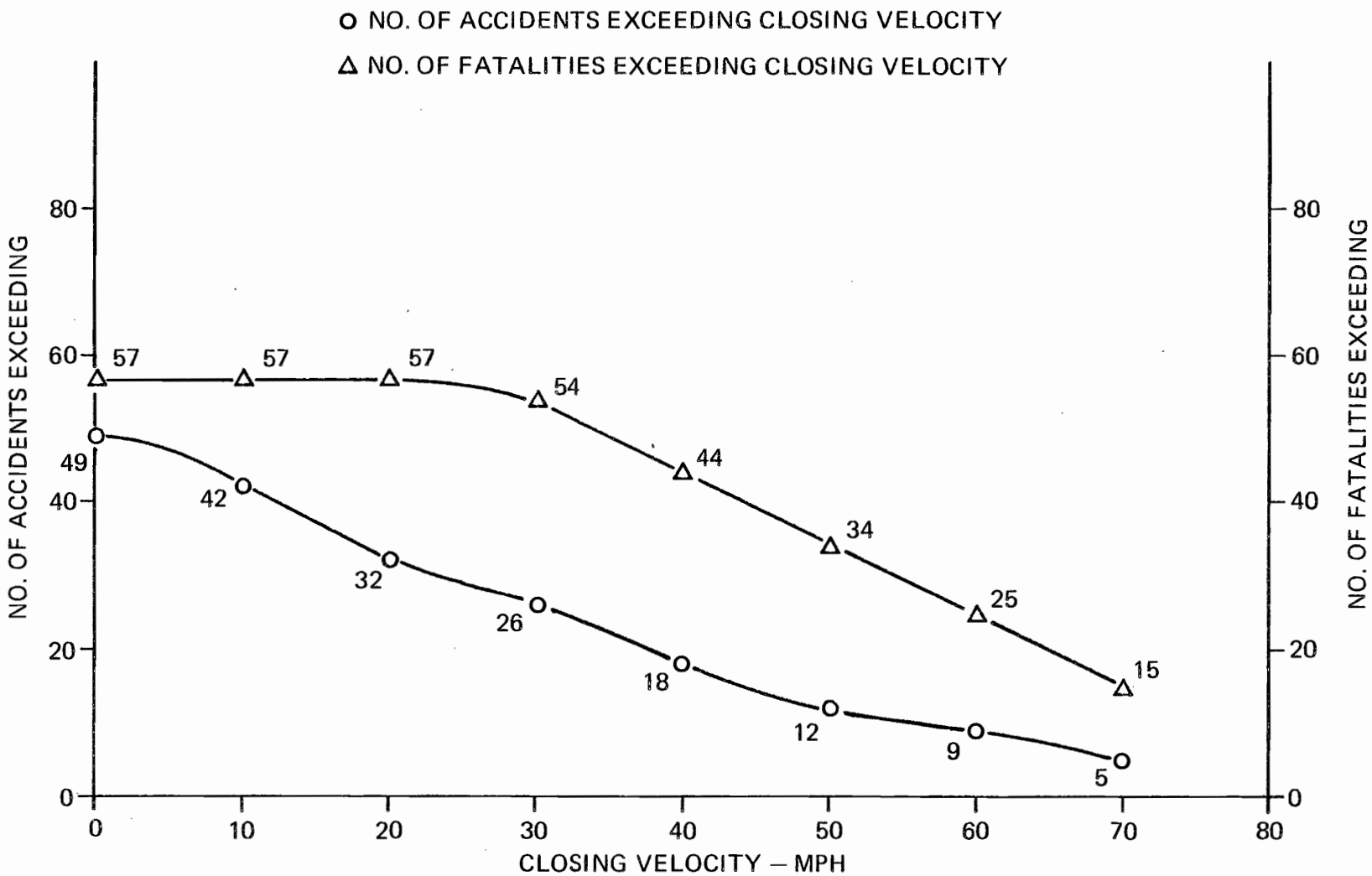

Figure 2–2. Analysis of Crash Environment Head on Collisions

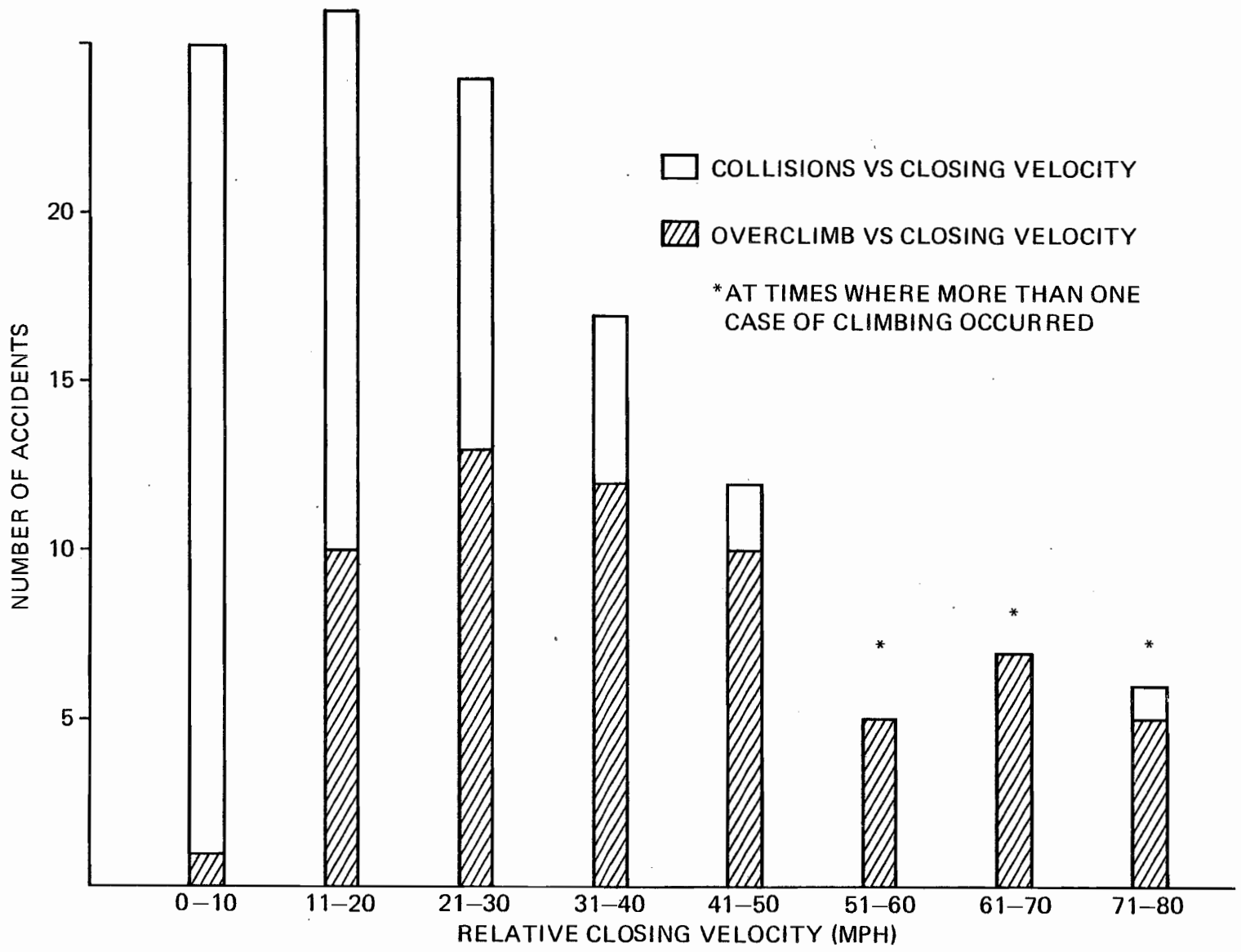

Figure 2–3. Overclimbs Vs Collisions DOT-TSC-856

Table 2–9. 166 Accident Sample Derailment Crash Dynamics

29 DERAILMENTS

10 CASES OVERTURN

*7 LOCOS OVERTURN

*4 PAX CAR OVERTURN

(*1 ACCIDENT HAD BOTH OCCURRENCES)

1 CASE CLIMBING

1 CABOOSE CLIMB

18 OTHER AND UNKNOWN

Table 2–10. Summary of Injuries and Fatalities - All Types of Collisions and Derailments

		LOCOMOTIVES	CABOOSES	PASSENGER CARS	TOTAL
FATALITIES		109	14	82	205
%		53%	7%	40%	100%
	PRIMARY	74	8	54	136
	%	54%	6%	40%	100%
	SECONDARY	22	3	14	39
	%	56%	0%	36%	100%
	EXTERNAL	10	0	0	10
	%	100%	-	-	100%
	OTHER	3	3	14	20
	%	15%	15%	70%	100%
INJURIES		234	63	2247	2544
%		9%	3%	88%	100%
	SECONDARY	167	63	2229	2459
	%	7%	3%	90%	100%
	EXTERNAL	67	0	0	67
		100%	-	-	100%
	OTHER	-	-	18	18
	%	-	-	100%	100%

Table 2–11. Structure Involved in Crashes

	LOCOMOTIVE	CABOOSE	PASSENGER
ANTICLIMBER	X	X	X
UNDERFRAME			X
COLLISION POSTS	X		X
ANTITELESCOPER		X	X
END CAR		X	X
TRUCK RETENTION		X	X
FUEL CONTAINMENT	X	X	
OCCUPANT COMPARTMENT	X	X	X

Table 2–12. 66 Accident Sample Crushing Fatalities by Car Type

TYPE CAR	TOTAL FATALITIES	FATALITIES DUE TO CRUSHING	% FATALITIES DUE TO CRUSH
LOCOMOTIVE	109	74	68%
CABOOSE	14	8	57%
PAX CAR	82	54	66%
TOTAL	205	136	66%

the caboose number two, followed by the locomotive. However, total improvements that will be accomplished may not impact the vehicle weight very much, especially in the case of a locomotive. This method, therefore, has some shortcomings for the ranking.

Based on the data presented and consistent with the premise that the most important benefit from enhanced crashworthiness is the saving of lives. The recommended order of ranking is:

(1) Locomotive
(2) Passenger Car (Self-Propelled)
(3) Passenger Car (Intercity)
(4) Caboose
(5) Passenger Car (Amtrak Bi-Level).

2.2.8 Recommendations for General Operational Guidelines

The operational practices for railroads as regards accidents and safety are continually being reviewed by the FRA and by the NTSB. No specific operational practice was noted to result in a reduction of safety. Some operational conditions were noted that if changed would result in an increase in crashworthiness. For the most part these changes also involved equipment modification.

The most important recommendation is to operate passenger cars with compatible anticlimbers. The most crushing deaths occurred in passenger cars where the anticlimbers did not mate. The mix of old and new cars on a line does not assure the maximum safety of the passengers or crew and, through anticlimber incompatibility, may do much to degrade safety. All passenger cars should have proper anticlimbers. Further, truck retention should also be required.

Vertical moment capability of couplers and anticlimbers and their supports should be restricted to prevent the failure of these component under impact conditions. Accident experience has shown that different cars have different strengths in these areas and have led directly to some catastrophic results.

The long hood forward for locomotive would probably save lives from the standpoint of vehicles climbing the loco and crushing the cab. True, trailing locos tend to climb the lead loco in a head end collision, however, from an exposure viewpoint the chances of overclimbing are less. In only 8 of 52 head end collisions did the trailing loco climb the lead loco. Loco climb loco in head end collisions and other vehicles climbing loco in rear end collisions occurred 53 times out of the accident sample used. One other item that must be studied and trade offs made is the loss of visibility with the long hood forward.

Improved accident reporting is a must with regards to structural damage, human injury mechanisms and impact dynamics. Again, this is an issue that involves the revenue of the railroad. The first thing that is done is to clear up the area and get the line back in operation. This fact along impacts the type and quality of the accident data that is available. Restoration of service would not be significantly slowed down by the proper and accurate recording of structural damage details and injury causing mechanisms to the occupants.

Standard tests to determine compatibility of structures should be required. Steady buff load testing would allow the manufacturer to know the modes of failure and then insure that all designs would have the same capability.

3. ANALYSIS OF VEHICLE CLASSES

3.1 SELF PROPELLED PASSENGER CARS

The ICG Highliner car, Figure 3-1, was selected as the first vehicle to be analyzed in detail for methods to improve its crashworthiness. This determination was based on data review and analysis and the ranking of the vehicles done in Phase I of this study. Also important was the high public interest shown in this car because of a very serious accident that occurred on October 30, 1972.

3.1.1 Basic Description

The Highliner cars are self-propelled, electric MU cars in which passengers are seated on two levels. Each car is 85 feet long, 15 feet 10 inches high and 10 feet 6 inches wide. A fully loaded car weighs approximately 148,000 pounds. The structure consists of high tensile, low alloy Corten "A" and "C" steel in the car body and underframe. The car body is a modified monocoque structure with the underframe of each car made from built up sections welded together. Basic buff strength is 800,000 pounds static load.

The car has two different ends. The "B" end has a vestibule which contains the operating compartment. The pantograph is also mounted on the roof at the "B" end. The "A" end or blind end has a door to allow passage to another connected car. The cars are usually coupled at the "A" end. A vestibule 6-1/2 feet long extends across the center of each car. There are two electropneumatic operated doors on each side of the car at the center.

There are two rows of double seats in the lower level of each car and two rows of single seats in the upper level. The section of the car next to the operating compartment seats 48 persons in the lower level and 30 in the upper level.

The section at the "blind" end of the car seats 44 in the lower level and 43 in the upper.

The brake system employs dynamic braking as well as electropneumatic-hydraulic, on-tread braking, with composition brakeshoes. The system electro-pneumatic braking alone or the combination, in which the dynamic braking is blended automatically with the on-tread braking.

Fully automatic, flat-face, hook-type SW 800 couplers also automatically join the air and electric lines. The couplers, yokes, and draft gears, are mounted in the center sills and provide anti-climbing capability.

The operating controls, brake valve, radio intercom system, two way radio and speedometer are located in the control compartment. The center vestibule has the door controls, radio intercom system and an emergency brake valve.

3.1.2 Accident History

The Highliner has been involved in two accidents on the Chicago Suburban Routes. The first while the cars were in the test run stage and not in revenue service. Extensive monetary

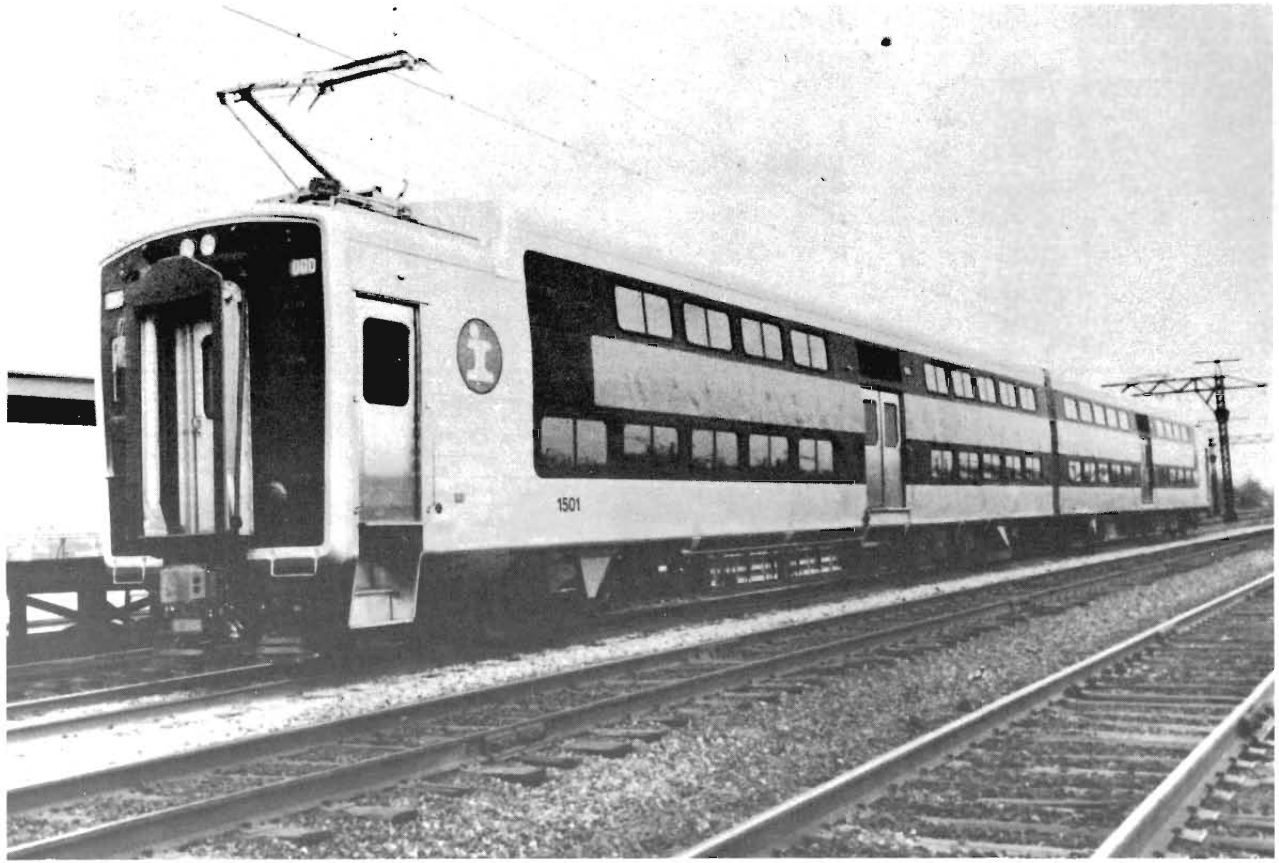

Figure 3–1. Two of Chicago South Suburban Mass Transit District's New Double Deck, Air Conditioned Commuter Cars, The "Highliners" on the Illinois Central Electric Line

damage was incurred by both cars. However, no overall structural failures occurred and no fatalities were incurred.

In 1972 an accident resulted in 45 deaths and over 200 injuries. One train of four Highliner cars ran past a station stop and then proceeded to back up into the station. Another train made up of old type cars coming into the station on the same track struck the Highliner train at approximately 45 mph. The old type train's lead car overrode the coupler and buff beam of the Highliner car and ripped through the collision post and end frame and proceeded halfway through the car completely destroying everything in its path (Figure 3-2). The couplers of the two different cars were not compatible nor able to couple. The old type car was not required to have truck retention capabilities. The underframe of the climbing car acted like a battering ram and was the primary cause of the deaths.

3.1.3 Structural Analysis

3.1.3.1 Static Test Data (Squeeze Test)

The contract specification required that St. Louis Car Company conduct a compression (squeeze) test on a structurally complete car. The structurally complete car was placed in a compression test machine, the design of which was approved by the A.A.R.

The load was applied through hydraulic jacks by applying pressure to both ends of the car. The load was applied in increments of 200,000 lbs. returning to zero and then continuing to the next incremental load. Final load was 810,000 lbs. and a total of eight sets of readings were taken.

The maximum vertical deflection between bolsters was 0.48 inches and all stresses recorded were below yield stress of the materials. After the test, the car was examined and the car test was approved.

From the recorded test data the loads carried by respective parts of the structure such as the side sills, draft sill, bolsters, side skins and stringers were calculated. It is significant to note that at the bolster, the side sills and draft sill are carrying approximately the same loads

The most significant conclusion derived from the squeeze test is that the floor shear plates at the car ends transfer load from the draft sill to the side sills, thus the buff load is basically in the underframe of the car.

3.1.3.2 Main Structural Components

Collision Posts

At each end of the car, there are two vertical end members, one on each side of the diaphragm opening. These are the collision posts. The original design specification for the Highliner cars conformed to the following specifications:

(a) I.C.C. Regulations, Section 91.457 for multiple Operated Electric Units

Figure 3–2. Damaged "Highliner" Struck by Older Type Car

(b) A.A.R. Manual of Standards and Recommended Practices, Pages C-75 to C-84 (1965) for the construction of New Passenger Equipment Cars.

Basically the requirement is that a 300,000 pound ultimate shear load must be applied to each post at a point even with the top of the underframe member to which it is attached, the bottom attachment of these members shall develop their full shear value. Also, if reinforcement is used to provide for the 300,000 pound shear value, such reinforcement shall have full shear value for a distance eighteen inches up from the underframe connection then taper to a point approximately thirty inches above the underframe connection.

The collision posts met the design requirements. However, there are discrepancies in the original design of the welds to attach the post to the underframe. As stated in the NTSB Accident Report, Reference 3—1. Also, this type of weld should not be used when tension due to bending is concentrated at the root of the weld or when subject to fatigue, impact loading or service at low temperature. The impact on a collision post will subject these welds to severe bending stresses as well as impact loading. This problem of an inadequately attached collision post does imply that the crash resistance would be below that intended to be provided by the design requirements should a crash occur. Assuming the attachment weld to the underframe has been corrected by subsequent design fixes, the attachment to the underframe meets the design specifications.

Underframe

The underframe arrangement is shown in Figure 3-3. End load is transferred from the buff beam/draft gear into the draft sill at the car ends. Shear plates attached to the draft and side sills carry the shear load from the draft sill to the side sills. The bolster shear plate carries additional shear load to the side sills. The side sill/shear plate welds limit the amount of load that can be transferred to the side sill. The load limited by the weld is approximately the same magnitude as the yield strength of the side sills between the bolsters. The total underframe capability is essentially the same at the center of the car and the ends of the car.

3.1.3.3 Load and Energy Characteristics

The analyses of the major structural elements of the Highliner car in carrying load and absorbing crash energy are presented in Table 3-1.

Classicial stress analysis methods were used in determining basic yield strengths of the following elements, collision post, draft sill, center sill, floor shear panels, bolster, side walls, side sill and roof panels. Rupture strengths of welded joints were also calculated.

3.1.3.4 Structural Assessment

The car end is shown in Figure 3-4. Important features to note are the side sill discontinuity at the left-hand side of the car. A set of steps for access to the ground is at this location. Any

Reference 3—1. Collision of Illinois Central Gulf Railroad Commuter Trains, National Transportation Safety Board Railroad Accident Report No. NTSB-RAR-73-5, Chicago, Illinois, October 30, 1972.

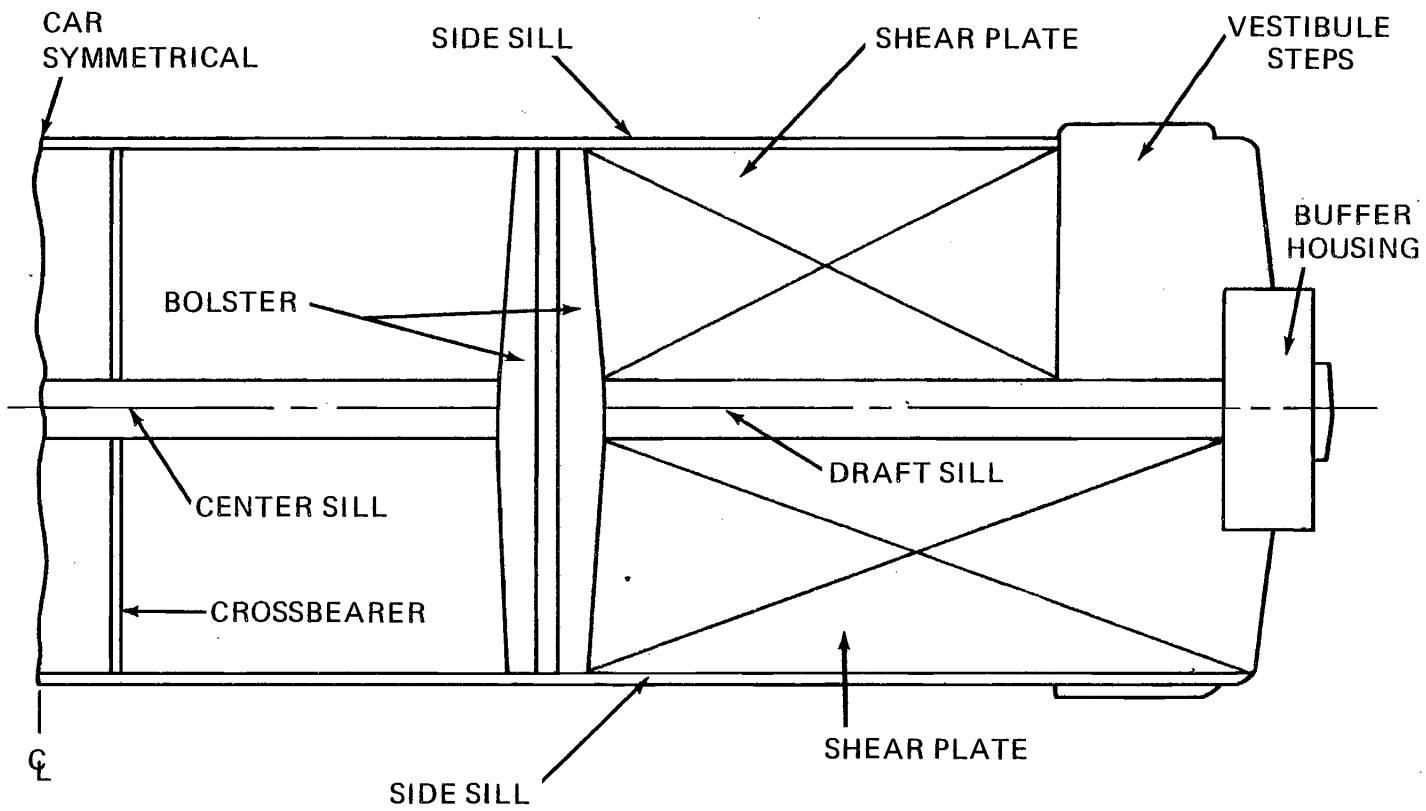

Figure 3–3. ICG Highliner Underframe Description

Table 3—1. Load and Energy Characteristics

ELEMENT	FAILURE MODE	LIMIT LOAD	STRAIN ENERGY
COLLISION POST	BENDING	64838 LBS/POST	986000 IN-LB/RAD.
DRAFT SILL	AXIAL COMPRESSION	1.11×10^6 LBS	22.78×10^6 IN-LB(45°)
SIDE SILL	AXIAL COMPRESSION		
	VERTICAL PLANE	233500 LBS	27200 IN-LB @ 45°
	HORIZONTAL PLANE	233500 LBS	21700 IN-LB @ 45°
CORNER POST	BENDING	21850 LBS/POST	334000 IN-LB/RAD.
ROOF: MID SECTION	SHEET-STIFFNER BUCKLING	69600 LB(FULL SECTION) @ MID SECTION OF CAR	128,000 IN-LB FOR 4" DEFLECTION
"B" END	SHEET-STIFFNER BUCKLING		
CENTER SILL	AXIAL COMPRESSION WITH MATERIAL YIELDING	563500 LB.	(ELASTIC) 157800 IN-LB
SIDE WALL'B' END	INTER SPOT WELD BUCKLING	14,950 LBS.	IN-LB FOR A 4 IN. DEFL.
SIDE WALL THRU WINDOWS			
TOP CORD	INTER SPOTWELD BUCKLING	11,500 LBS.	
SIDE SKIN	WRINKLING	8,300 LBS.	
BOTTOM CHORD	WRINKLING	5,600 LBS	

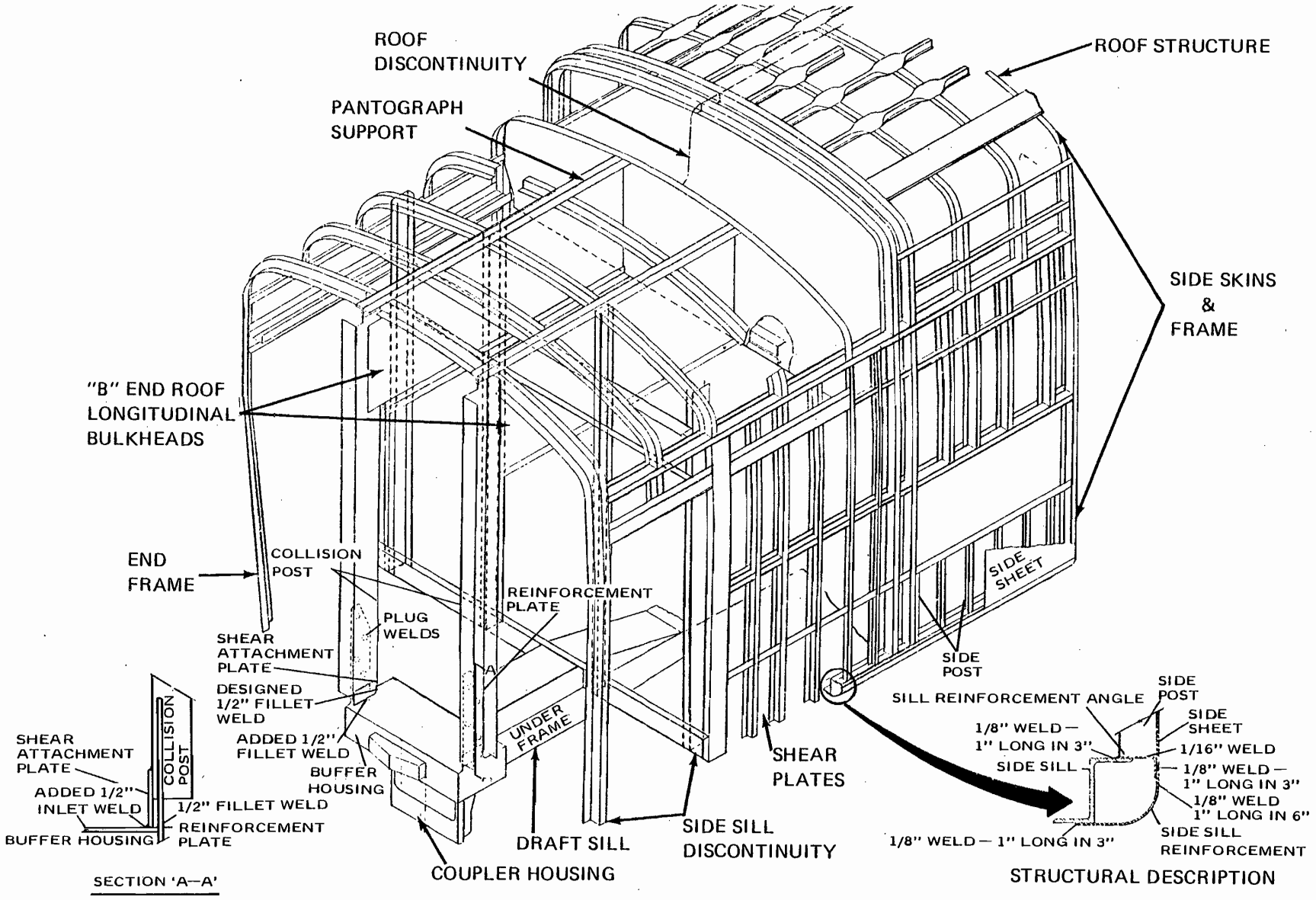

Figure 3–4. Cab End Structure ICG High Liner

load that is introduced to the end frame cannot be transferred to the side sill directly but must go to the draft sill, to the shear plates and then to the side sill.

The shear plate attachment to the side sill limits the amount of load that can be transferred into the side sill. A doubler or additional weld would greatly increase the load that can be sheared into the side sill.

The roof discontinuity shows that loads introduced into the end frame or the longitudinal bulkheads must be sheared to the roof sills. A continuous roof would increase the energy-absorbing capabilities of the car.

The collision post attachment to the longitudinal bulkhead is very weak and even this load must be transferred by the roof skins to the roof sills to be effective.

It is obvious from the analysis shown that the buff load capability can be increased by the addition of redundant shear plates or increased weld strength at the side sill. Very little buff load is carried by the superstructure. Figures 3-5 and 3-6 show the mathematical models (KRASH) that were used to analyze the car. The important findings and recommended improvements are listed under each figure.

The underframe is the principal load-carrying and energy-absorbing structure of the car.

3.1.4 Force Deformation Characteristics

The force deflection curve for static load application is generated from the static test results and the load energy table shown in Table 3-1. In these load applications the failure mode follows a minimum energy path through the elements in the car and continues as the stronger elements fail. The final portion of such a curve shows the compression of compacted material as in bulk modulus testing. In the real life crash the externally applied loads are reacted by the decelerating masses and result in a continually changing load distribution throughout the car. In the static force deformation simulation it is assumed that all the mass is concentrated at the car center and reacts the structure as required. This is a simplification of a complex phenomenon which has value in understanding the gross behavior of cars.

In the formulation of meaningful force deflection curves for the Highliner, the results of the elemental analyses summarized in Table 3-1, the results of the dynamic simulation using the KRASH Program and the static test results, should be used as a basis for the hypothesizing of a rational scenario. These data first taken separately and then considered together provide a sound basis for the synthesis.

Referring to the summary of the elemental analyses in Table 3-1, it may be seen that the underframe elements constitute both the primary load carrying and the principal energy absorption capacity. In particular, the draft sill and the side sills act in this manner. The relative load and energy-absorbing capacity of the other elements is seen to be of secondary importance. Three cases are treated, buff loading with full underframe strength developed, buff loading with shear plate weld failure and the override.

For the first case the constructed force deflection curve is shown in Figure 3-7.

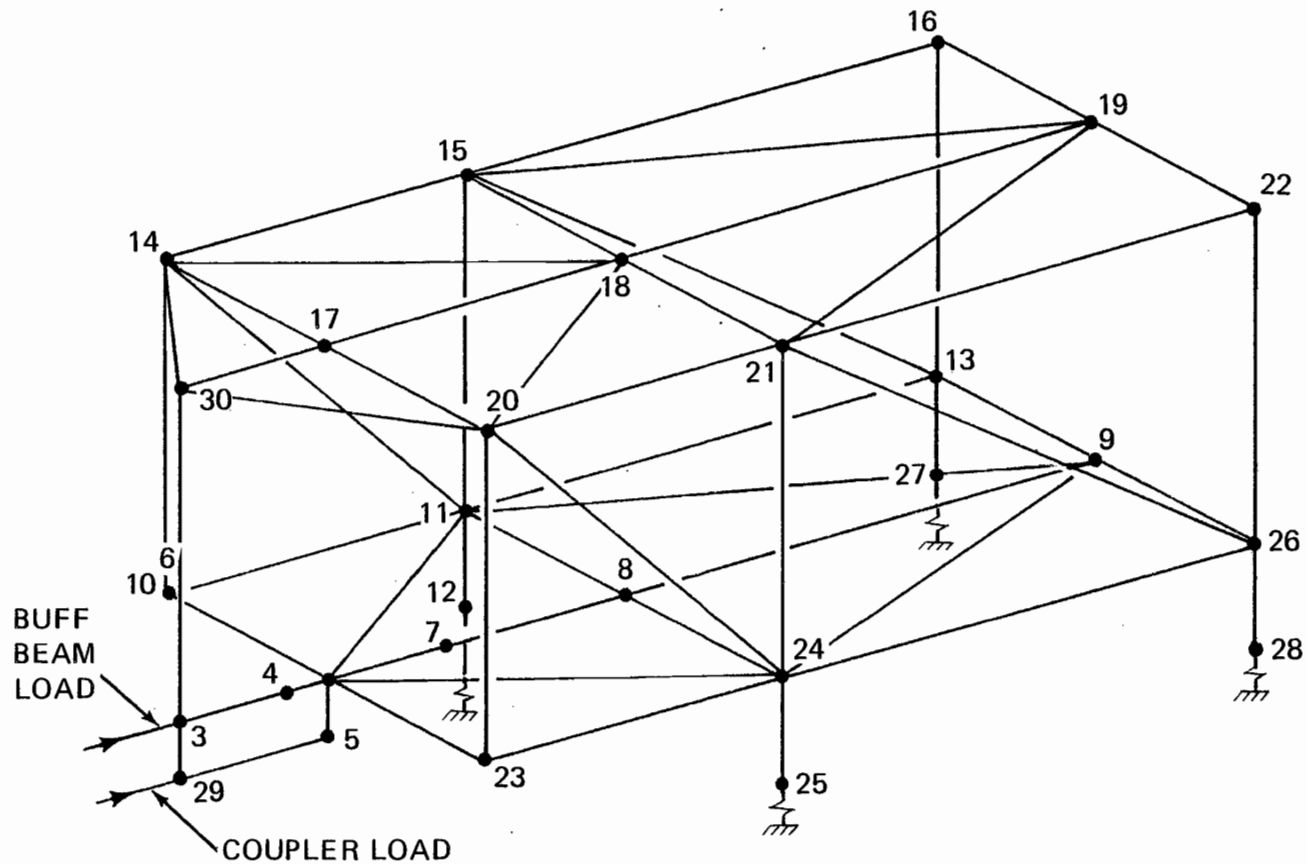

FINDINGS

- DRAFT SILL DOES NOT BUCKLE
- SHEAR PLATE WELDS TO SIDE SILL FAIL
- CENTER SILL YIELDS IN COMPRESSION
- SMALL LOADS IN SUPERSTRUCTURE

IMPROVEMENTS

- INCREASE WELD STRENGTH, SHEAR PLATE TO SIDE SILL
- REDUNDANT LOAD PATH FOR SHEAR PLATES

Figure 3–5. ICG Highliner 30 Mass Model Coupler and Buffer Beam Impact

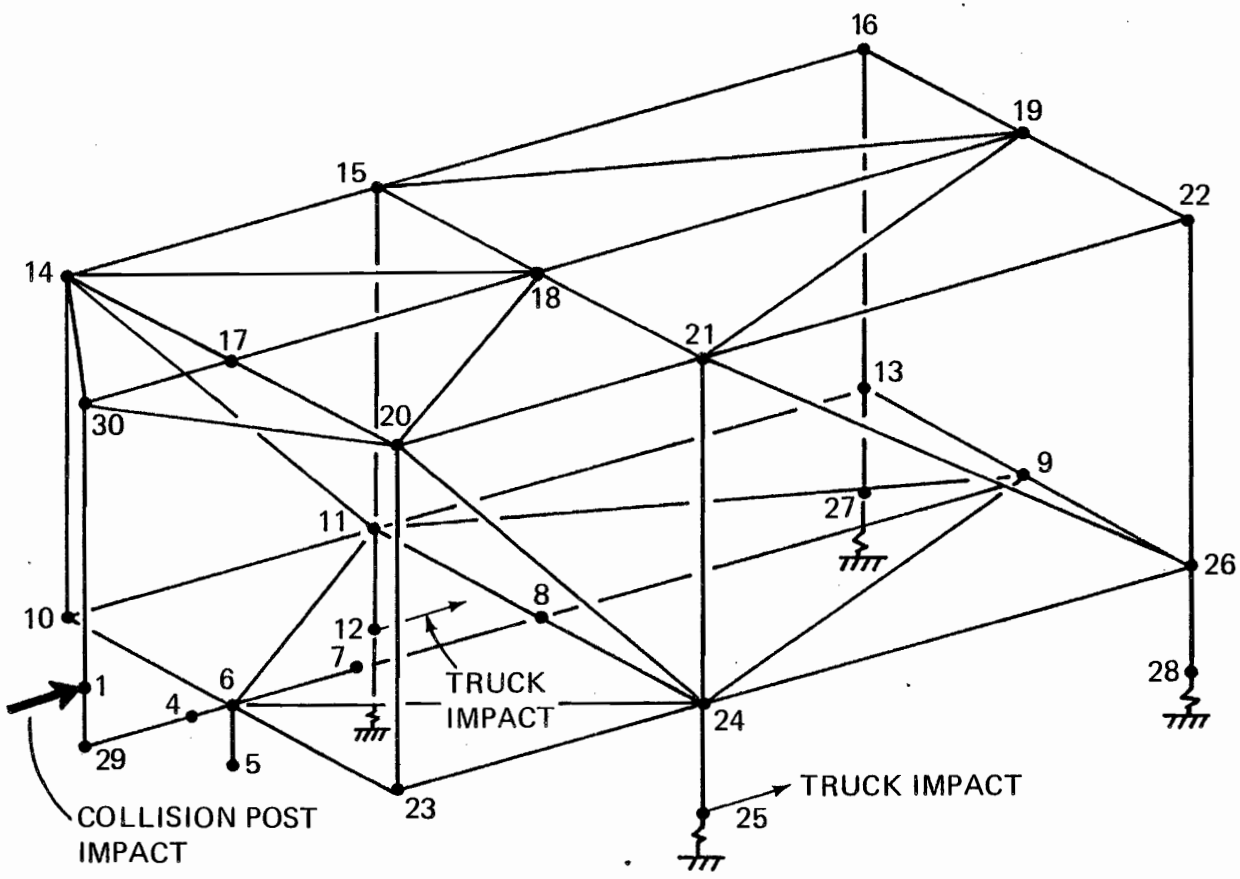

FINDINGS

- TRUCK RETAINED BY HANGERS ATTACHED TO SIDE SILL (NO CENTER KINGPIN)
- INCREASED HANGER STRENGTH CAUSES SIDE SILL BUCKLING

IMPROVEMENTS

- INCREASE STABILITY OF SIDE SILL DESIRED.
- SHEAR PLATES BETWEEN SIDE SILL AND CENTER SILL
- SPECIFY WHERE TRUCKLOAD IS APPLIED IE, AT ℄ AXLE.

Figure 3–6. ICG Highliner 30 Mass Model Collision Post Impact and Truck Retention Model

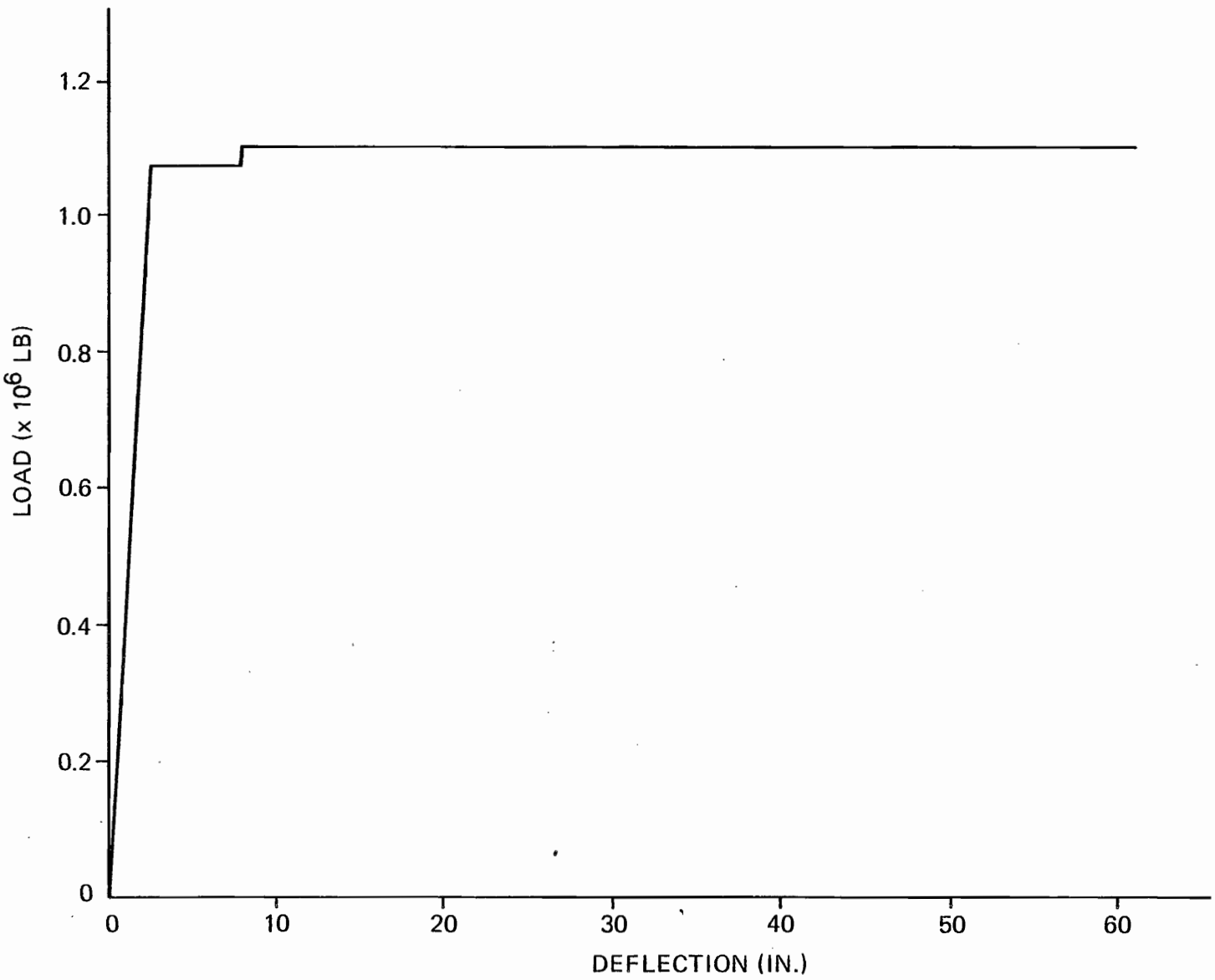

Figure 3–7. ICG Highliner Force Deflection Curve (With No Shear Plate Failure)

The resistance of the Highliner car to the end impact case could also take the shape of the force deflection curve shown in Figure 3-8. From the elemental analysis of the shear plate welds to the side sills, the weld strength on one side is lower than the yield strength of the shear plate. The possibility exists that the welds will begin to fail thereby drastically altering the force deflection curve.

The resistance of the Highliner car for the overriding phenomenon is shown in Figure 3-9. It is obvious from crash experience that the car is very weak in this mode as compared to coupler-coupler impacts. In particular, the reduction of survivable volume in the car ends is noted in the crash photos. The strength of the underframe, the major load carrying and energy absorbing members do not become effective until the truck bolster of the overriding car contacts the coupler, coupler carrier or buff beam.

It must be noted that the truck retention strength for the Highliner car is 250,000 pounds ultimate. The possibility exists that if the target car is another Highliner, the truck could be ripped off the carbody before the car center strength is developed and further penetration of the overclimbed vehicle would occur.

It should be noted that these curves are increasingly subjective with deflection and that other factors such as jackknifing, rollover, the variations in the failure sequence may invalidate the results for large deflections, even in the gross sense.

Using the force deflection curves of Figures 3-7 and 3-8, the collision of a 4 car Highliner train with another 4 car Highliner was investigated. The range of closing velocities investigated was from 20 mph to 80 mph for the end-on collision. These speed ranges appear reasonable for the simulation of Highliner cars on the Chicago system. As was stated in the force deflection curve scenarios the shear plate attachment to the side sill failure would have a dramatic effect on the car crush distance for the head-on collision case.

As shown in Figure 3-10, if no failure of the attachment occurs the crush distance is approximately half of that when a failure exists.

For the override with good truck retention the results shown in Figure 3-10 should be increased by 90 inches.

Car crush is used as a measure of the casualties encountered in the initial crash. The results shown are for the impacting lead car. Other cars in the train consist do not show significant amounts of crush. This fact is observed in the data review. It clearly defines the problem of penetration to the first car at the impacting plane.

The collision dynamics used here made use of a simple WATFOR program that studies the rigid body dynamics of rail vehicles in the longitudinal-vertical plane under impact conditions. From the crashworthiness standpoint, it is clear that the buff strength of the car is directly related to the crush that is encountered in a crash environment. If the underframe ties together all structural elements without any weak points, the crush distance can be controlled to meet specific requirements for impact conditions.

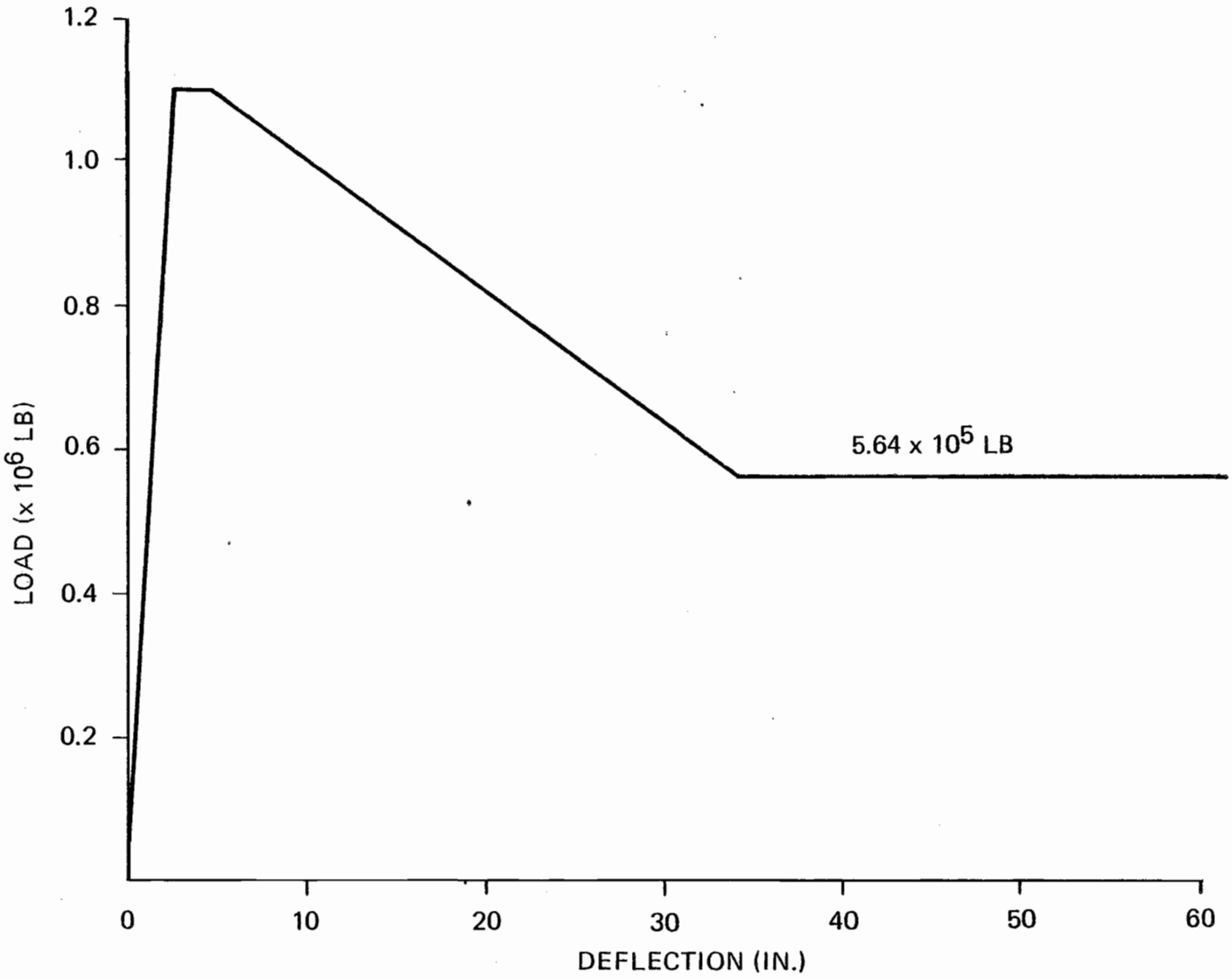

Figure 3–8. ICG Highliner Force Deflection Curve (With Shear Plate Failure)

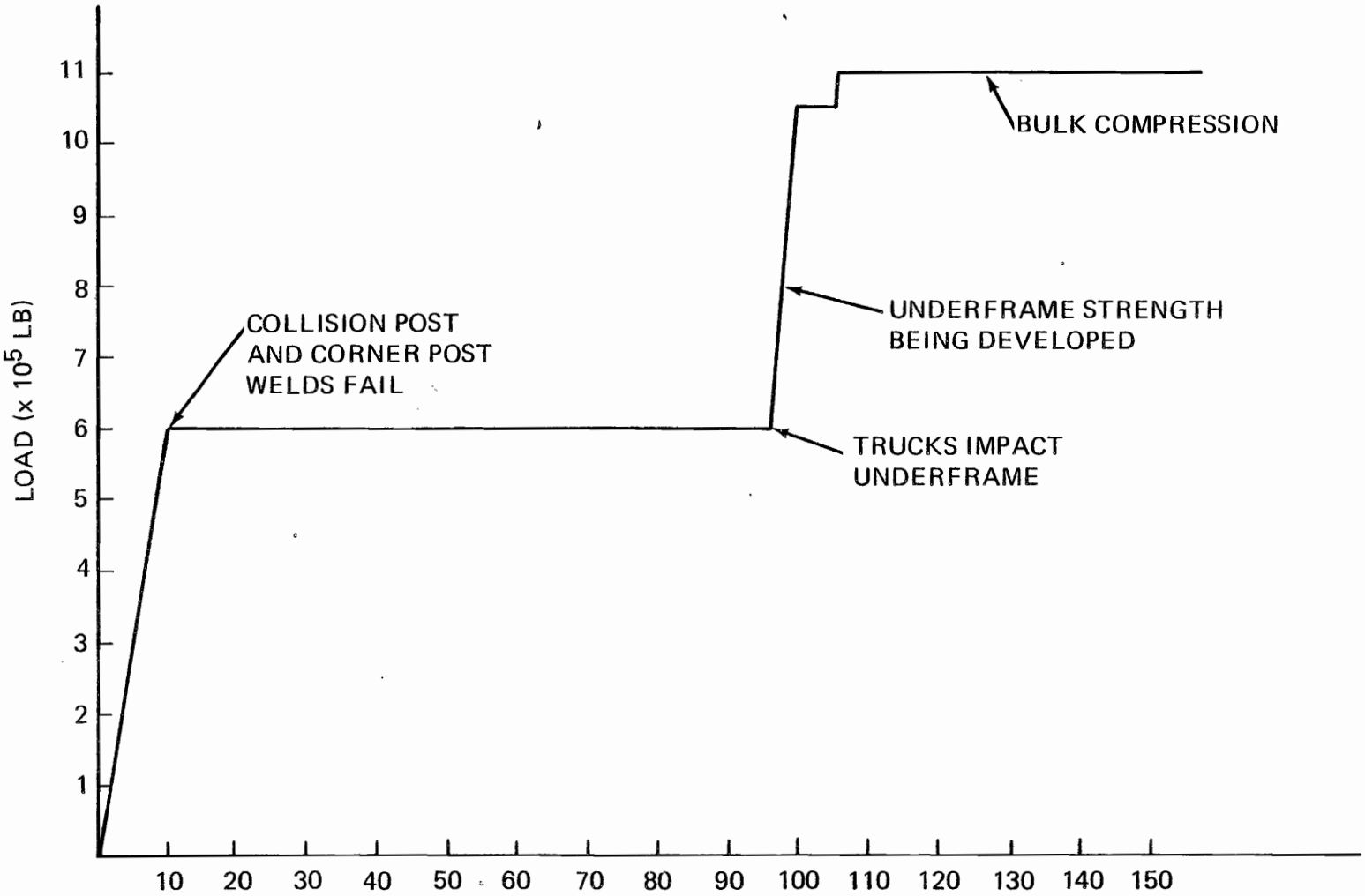

Figure 3–9. ICG Highliner Force Deflection Curve (Overclimb Case)

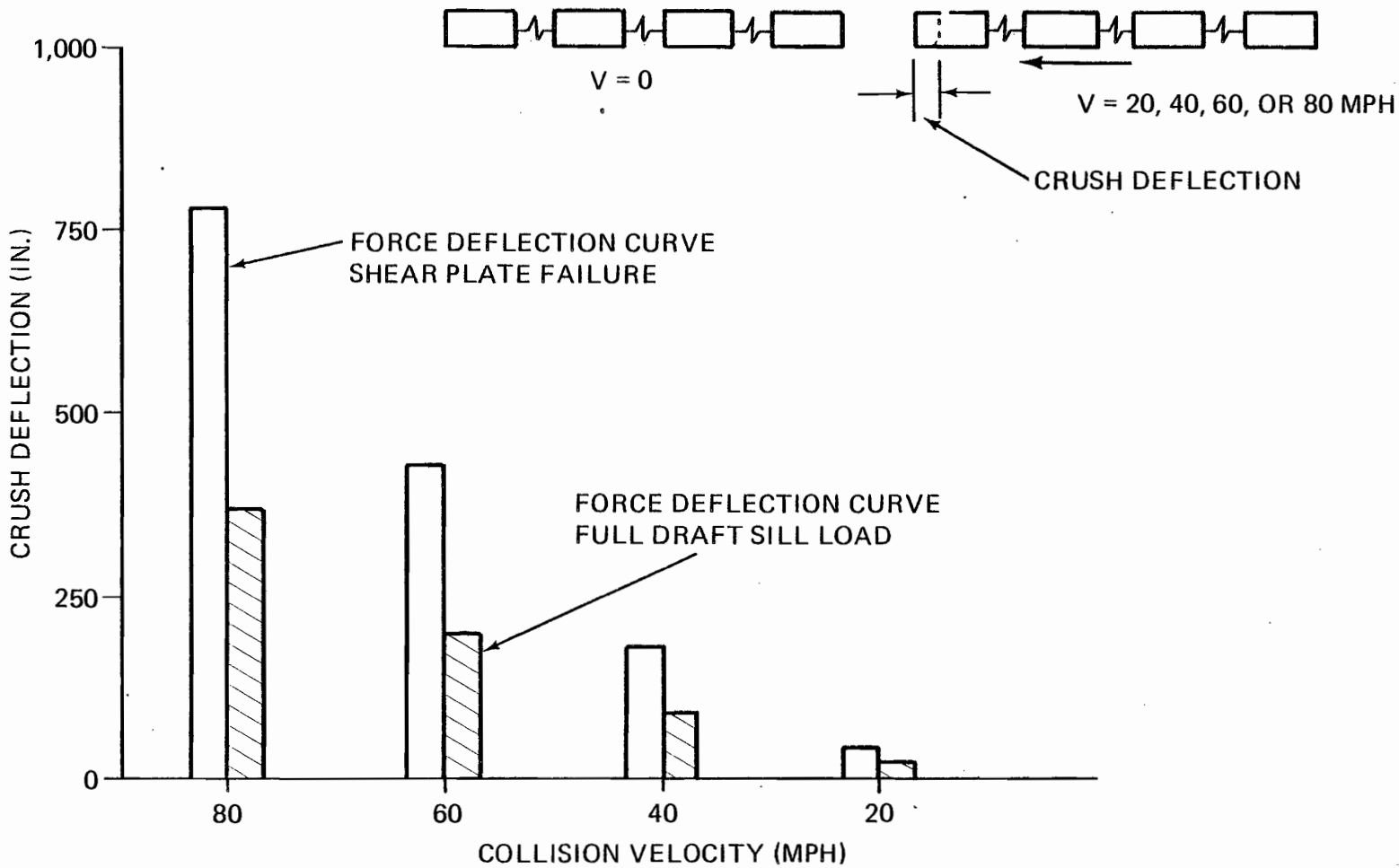

Figure 3–10. ICG Highliner – 4 Cars/Train, 2 Train Collision at 20, 40, 60, and 80 MPH, Total Car Crush of Impacting Lead Car

3.1.5 Trade Studies

3.1.5.1 Side Walls and Roof

The effect of strengthening the sidewalls and the roof was investigated. It was found that doubling the gage of these elements results in only a 40% increase in strength. The conclusion is that present construction of the side walls and roof contribute very little to the overall crashworthiness of the car. If an object (another car, motor vehicle, or heavy mass) would impact the car above the underframe, it is likely that the object would penetrate the car virtually destroying the side walls and roof.

The construction of these elements seems to adequately protect the occupants during a roll-over sequence. Vertical loads on the roof or horizontal loads on the side walls are redistributed by the skins, carlines and purlines to the major frames and posts. Deformation of the structure in this mode would not significantly contribute to fatalities.

Collision Post

A collision post study was made using computer program STKWKT. The program considers a finite element representation of an elastic-perfectly plastic non-linear plane frame beam element. The theory includes plasticity, shear deformations, rotary inertia, large deflections and combined axial and bending loads. Output includes yield and plastic indicators, plot of the deflected shape of the structure, and the time history response of a selected node.

The as-designed properties of the collision post, draft sill and roof were modeled as a plane frame as shown in Figure 3-11. The purpose of the study was to optimize the design of the collision post by increasing its ability to absorb energy.

The collision post being impacted by an overriding car is simulated by applying concentrated masses of 194 lb-sec^2/in. at nodes 6 and 7 and applying an initial impact velocity of 300 in./sec (approximately 17 mph) normal to the collision post. This mass corresponds to a weight of 75,000 lbs. applied at each node which represents an overriding car weighing 150,000 lbs.

To increase the energy absorption capability of the collision post, the area of the post was doubled, tripled and quadrupled. As can be seen from Figure 3-12 the optimum post occurred at the knee of the curve where the area was approximately 2.25 times the design area. The knee of the curve results from the formation of plastic hinges in the underframe and in the roof which experience the principal deformation. For this case the collision posts are developing the strength of the roof and of the underframe. Thus it appears that the backup structure limits the effectiveness of increased section in the collision posts above a factor of 2.25.

3.1.6 Cost Benefit Analyses

In the interim report a detail breakdown of the cost picture is prepared based on changes in both structural design and operating techniques. Using a worst case accident between 2 six

NODES 5 TO 10 COLLISION POSTS
NODES 1 TO 5 UNDERFRAME
NODES 10 TO 14 ROOF

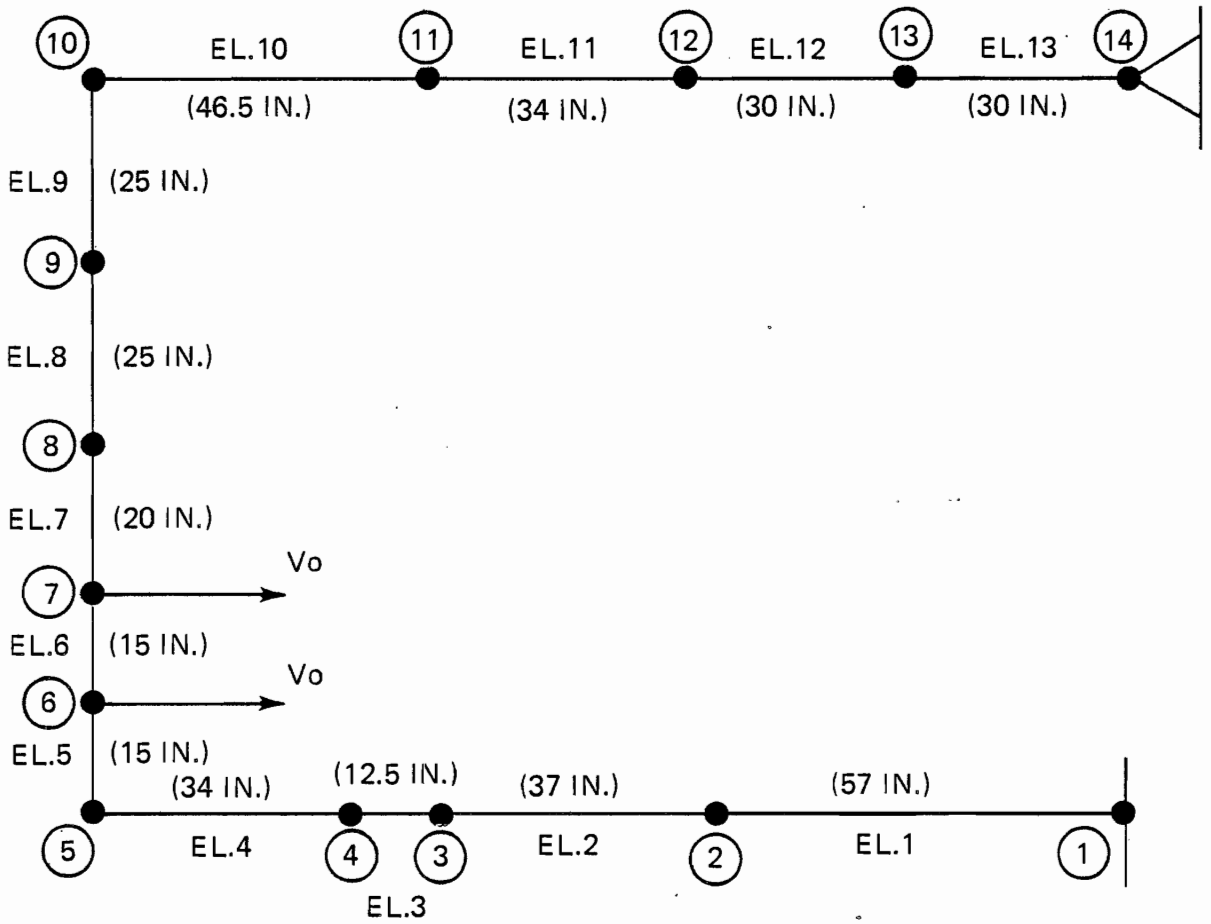

(X) NODE NO.

(XX IN.) ELEMENT LENGTH

EL.X ELEMENT NO.

Vo = INITIAL IMPULSE VELOCITY OF MASS AT NODE 6 AND 7. MASS IS MAGNITUDE THAT REPRESENTS IMPACTING RAILCAR.

Figure 3–11. ICG Highliner STKWKT Collision Post Model

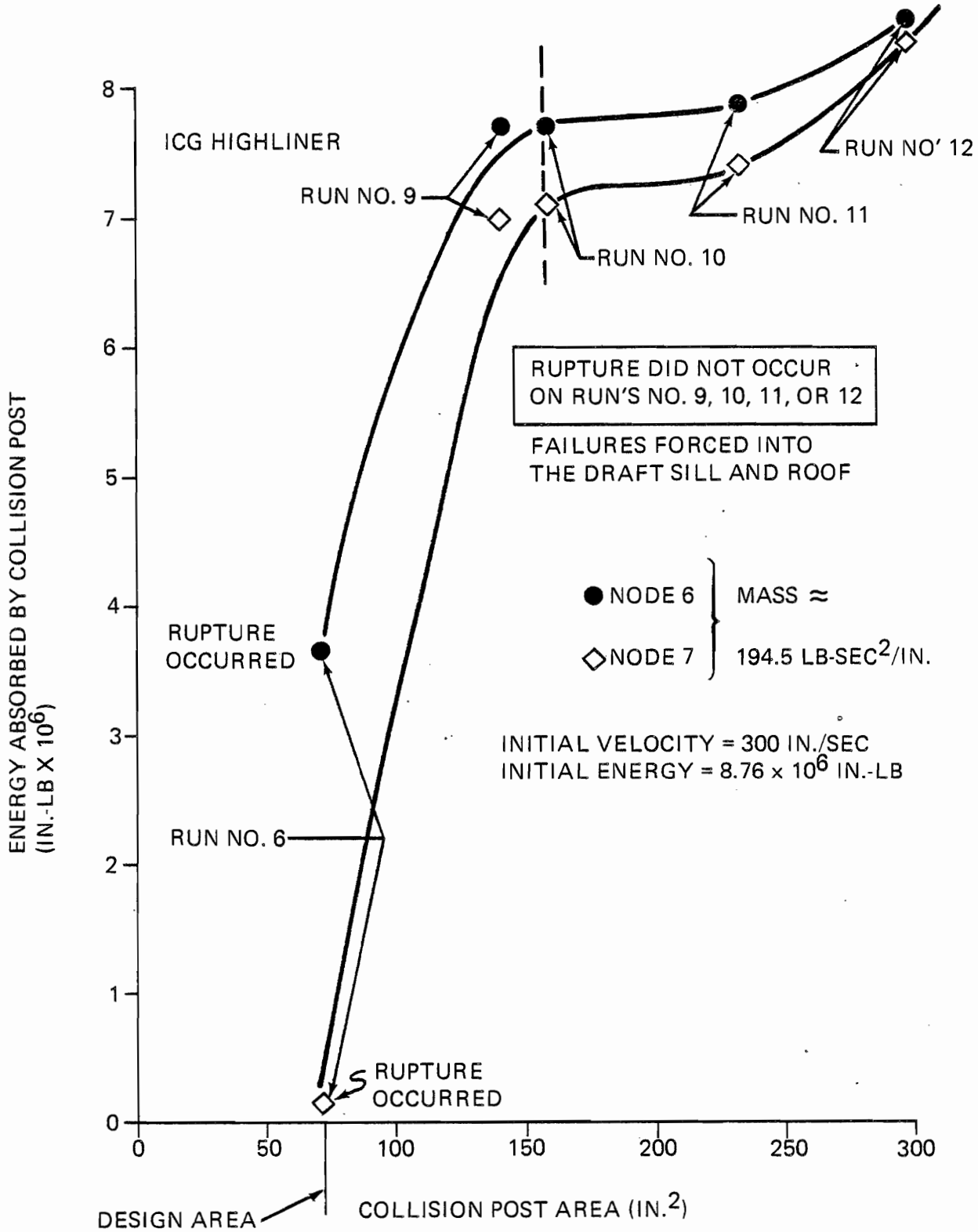

Figure 3–12. Energy Absorbed by Collision Post Vs. Collision Post Area

car trains with a closing speed of 75 mph the system cost of reducing the destruction of passenger occupied areas is shown in Figure 3-13. Large increases in passenger protection may be achieved at small cost by structural improvements up to 75% reduction. Above 75% reduction reducing speed becomes a viable option. The use of buffer zones, reduced train sizes and mechanical devices are excessively costly. These results suggest a combination of structural improvement and operational speed restriction may be an approach for complete protection. The structural approach to crashworthiness is clearly superior.

3.1.7 Recommendations and Conclusions

The study has led to the following structural recommendations for improving the crashworthiness of the ICG Highliner. The following structural modifications should be considered:

- Improved collision posts
- Shear plate redundancy, draft sill to side sill
- Improved weld capability, side sill to shear plates
- Additional shear capability between side sill and center sill between bolsters
- Added shear capability to bolster, improve longitudinal bending beam
- Improved truck retention
- Anticlimber
- Decrease unsupported span side sills
- Increased buff strength in underframe.

The improved collision post must also take into account the attachments of the roof and the underframe. It is also worthwhile to consider the addition of another set of collision posts at the vestibule frame.

The collision posts at the vestibule frame would provide an excellent second line of defense for the override case.

All of the recommendations lead to the desirability of having the car develop its full buff strength capability in override conditions as well as during coupler to coupler impacts. Override is the major cause of fatalities in rail vehicle collisions since any improvement that reduces the amount of destruction is worthwhile. From the cost benefit studies, it is obvious that the least cost solution for saving lives is by structural modification. The ranking of methods that were considered is as follows:

(1) Structural modifications

(2) Buffer Zones

(3) Reduced train size

(4) Reduced speed limits

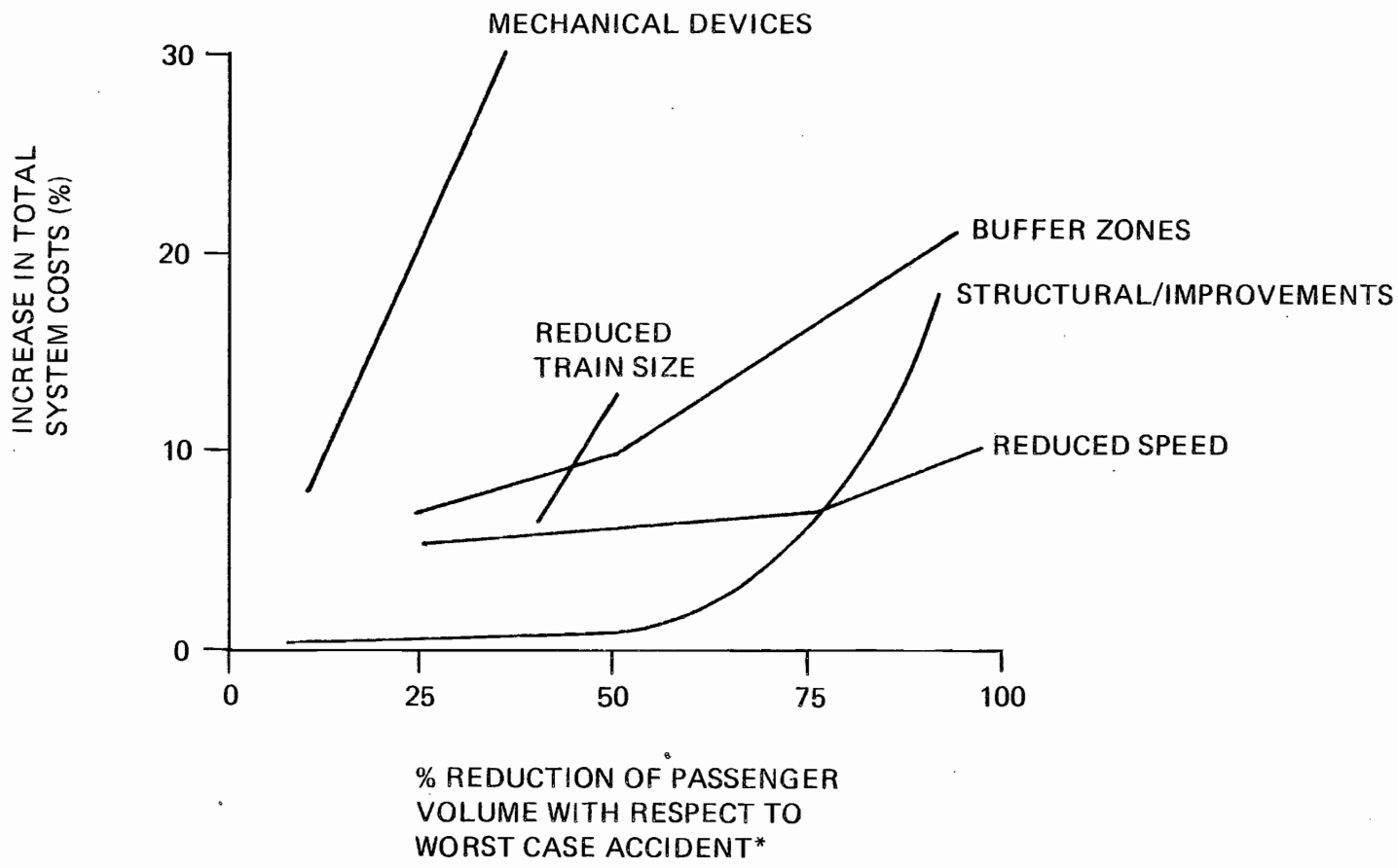

Figure 3–13. System Cost Benefit Analyses Results

(5) Mechanical Devices

(a) Hydraulic Actuators

(b) Honeycomb Attenuators.

Overall general conclusions arrived at through the data search, review and analysis and through the detailed analysis of the ICG Highliner car are as follows:

- Accident report procedures be improved to include structural and collision dynamics engineering data.
- Experimental research should be conducted on collision dynamices for the prevention of override.
- Experimental research should be conducted on structural crashworthiness of complete vehicles and of components.
- Standard test procedures should be developed for the validation of structural crashworthiness of complete vehicles and of components.
- More detailed systems studies should be conducted for the combined effects of structural improvements and operational factors of crashworthiness.
- Crashworthiness specifications should be developed that establish structural requirements in terms of survivable worst case accident and tests provided to demonstrate crashworthiness.

3.2 CABOOSE STRUCTURAL ANALYSIS

Phase II of the program was directed at the analysis of the next two vehicles identified in the accident review section of Phase I. These were the locomotive and the caboose. Due to the ready availability of construction details on cabooses from International Car Company it was decided to proceed with this vehicle first even though the priority was higher on the locomotive.

3.2.1 Caboose Specifications

FRA regulations for design requirements do not identify cabooses as a distinctive species of vehicle but they are included as a specific subspecie of freight car and as such are covered by these general requirements. Also, cabooses are not normally in interchange service and hence do not have specific AAR design criteria established. Again the general requirements used follow those established by the AAR for a 50-ton box car.

The International Car Company, who manufactures a large percentage of cabooses in use in the United States today, designs only two components to specific criteria set forth by the AAR. These components are the underframe and the end construction.

(1) The sliding sill must withstand a 1,000,000 pound compressive end load and the allowable stress is the critical buckling stress.

(2) The sliding sill must withstand a 350,000 pound draft load at a 1.8 load factor and the allowable stress is the yield stress.

(3) The sliding sill must withstand an impact force of 1,250,000 pounds without receiving any destructive damage for which the car would require shop repairs. This has been interpreted to be the ultimate stress for the material.

(4) The sliding sill shall be capable of withstanding a vertical load applied in a plane at the ends of the fixed sill sufficient to lift the car end free of the truck nearest the applied load. The allowable stress is the yield stress for the material.

(5) A vertical load of 50,000 pounds applied in both directions to the coupler head at the pulling face.

The end construction which consists of the collision posts, corner post and wraparound sheet meets the requirements of the AAR Manual of Standards and Recommended Practices for the Construction of New Passenger Cars, Chapter C-81, Section 18, paragraphs (a), (b), (c), and (e).

Other specific requirements are generally given by the property ordering the caboose.

No specifications of any kind exist for the structural crashworthiness design of a caboose at the time of this analysis.

3.2.2 Vehicle Selection

There are three classes of cabooses operated by the American railroads based on the body structure; namely, bay window type, extended wide vision cupola and flush cupola. Bay window type cabooses, Figure 3-14, have a bay on each side of the car, extending out further from the side and built integral with the side of the caboose. Each bay has one window, sliding horizontally and two observation windows, that are stationary. Extended type and flush type cupola cabooses have a cupola built separately and later welded on to the body of the car at the top. Extended cupola cabooses have the cupola sides extending out further from the side of the car and the flush cupola have the side of cupola flush with the side of the car. Both types of cupolas are provided with four stationary observation windows and two horizontally sliding windows. All three types are manufactured by International Car Company.

Of the three type cabooses built, the Bay Window Caboose with a cushioned underframe was selected to be analyzed in this study. A basic description of an International Car Caboose is given in Section 3.2.3.

It should be emphasized that there are a lot of different cabooses used today, some old, some new, some rebuilt and some ready for the scrap heap. Cabooses have been built of wood, steel, old box cars or a box placed on a flat car. Some railroad properties build their own and some buy them new. There are approximately 14,000 cabooses on the U.S. railroads. The analysis done on the Bay Window Caboose with cushioned underframe will provide ideas and recommendations for improving caboose crashworthiness and will be applicable to those 14,000 cabooses now in use and to any new procurements.

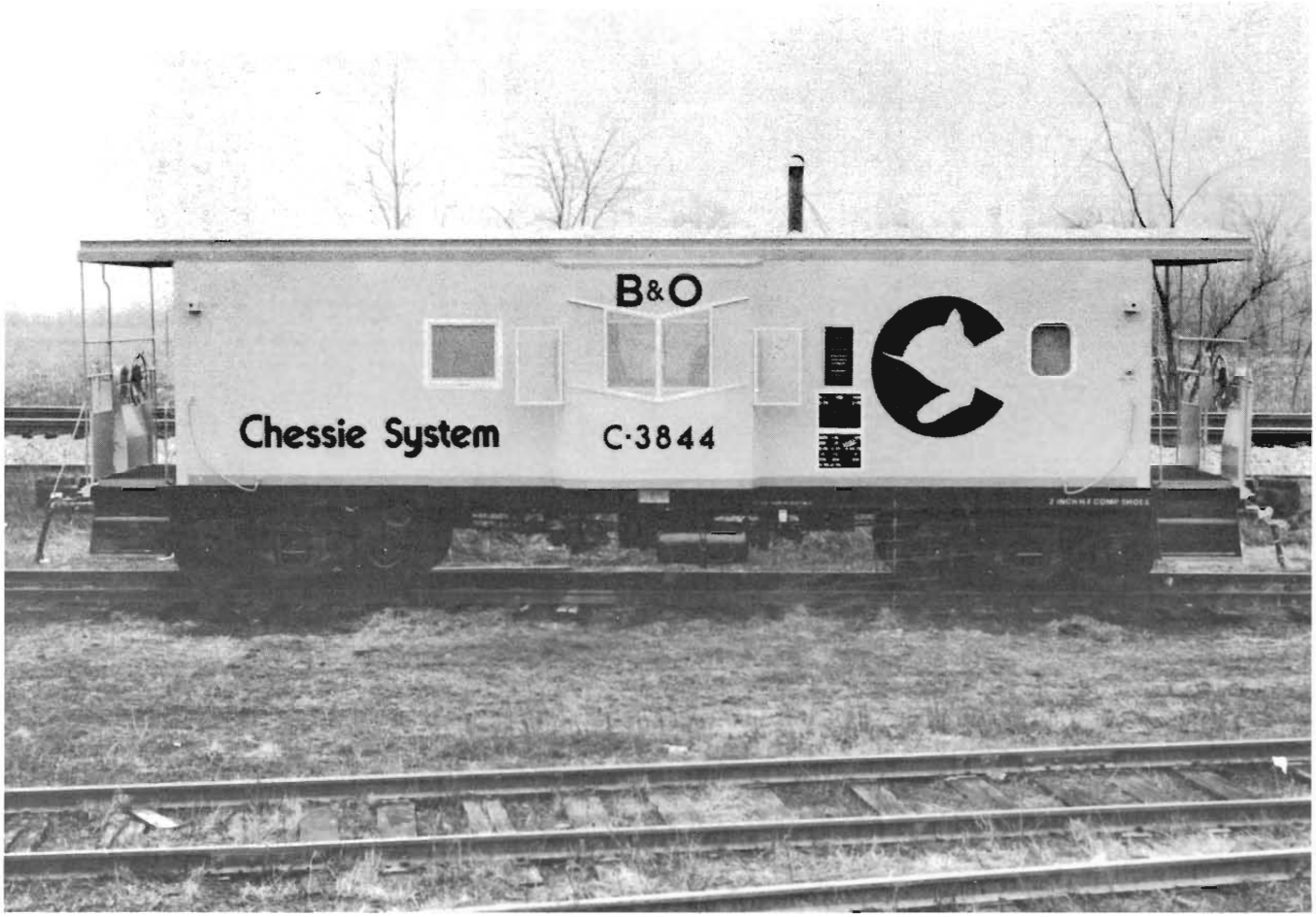

Figure 3–14. Bay Window Caboose

3.2.3 Basic Structural Description

The caboose structure consists of a base structure, the underframe, and a super structure, the body. Figure 3-15 shows the major elements of the caboose.

A detailed analysis of the strength of the structural elements of the caboose was conducted. Geometric and structural properties were obtained from the manufacturing drawings. Using the same technology as used for the analysis of the Highliner, the ultimate strength and energy absorption capability of the caboose were derived.

Results of analyses of major structural elements of the caboose to carry load and absorb energy are presented in Table 3-2. This table is used to prepare force deflection curves for the caboose in different accident scenarios. These vehicle force deflection curves are discussed in detail below.

3.2.4 Force Deflection Characteristics

Force deflection curves for the caboose have been developed using the results shown in Table 3-2. These static load applications* follow a minimum energy path of failure through the elements and continues as the stronger elements fail. The final portion of these curves represents the compression of compact materials as in bulk modulus testing.

Two accident scenarios have been in the formation of the force deflection curves. One scenario involves a collision where no climbing occurs and the other where a vehicle climbs above the caboose underframe. The assumption is made in the climbing case that the trucks of the climbing vehicle are retained and will develop the full strength of the caboose underframe before bulk compression occurs. These curves are used in collision dynamic studies where crush distances of cars involved in a collision is determined. The two curves are shown in Figure 3-16 and 3-17.

3.2.5 Structural Assessment

Data review and structural analyses have shown to the caboose to be a very good crashworthy structure with regards to crushing. Probably, the most significant fact is that the caboose usually is the vehicle that causes the crushing in a collision. The caboose end construction above the underframe is approximately five times stronger than the short hood area of the locomotive. The fixed and sliding sill combination is capable of withstanding approximately the same buff load as the locomotive, thereby making the buff loads compatible. The light weight of the caboose in combination with the absence of truck retention allows the caboose body to rise or roll out of the way during the collision sequence. When the caboose rise above the underframe of the locomotive, the center sill and end construction acts just like a battering ram in destroying the locomotive occupied area.

The side construction of the caboose is not as strong as the end construction. Little evidence was seen that the caboose is crushed from the side during collisions. Crushing did occur when rollover was present. However, the frequency of this occurrence was so small and the resulting fatalities almost negligible.

*During initial impact it is assumed the inertia of the coupler-draft gear mass reacts the applied load allowing the compressive load to exceed the static strength of the underframe.

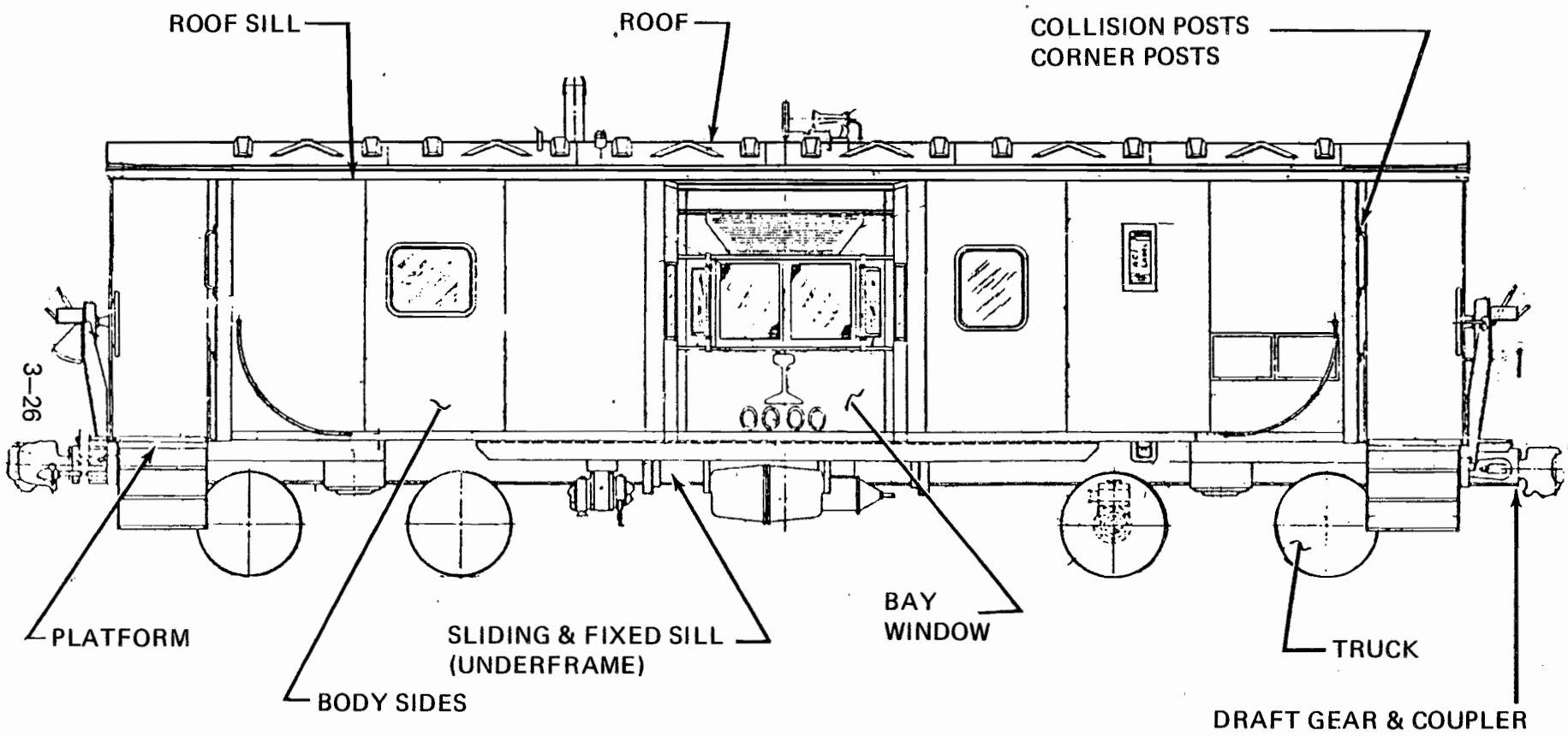

Figure 3–15. Caboose Major Structural Elements

Table 3–2. Caboose Failure Load and Energy Characteristics (Sheet 1 of 2)

ELEMENT	FAILURE MODE	LIMIT LOAD (LB)	STRAIN ENERGY (IN.-LB)
SLIDING SILL			
36,000 PSI MAT'L	SHORT COLUMN YIELD	863,000	24×10^6 AT 45° PLASTIC HINGE
50,000 PSI MAT'L	SHORT COLUMN YIELD	1,100,000	30.6×10^6 AT 45° PLASTIC HINGE
FIXED SILL			
36,000 PSI MAT'L	SHORT COLUMN YIELD	592,000	16.6×10^6 AT 45° PLASTIC HINGE
50,000 PSI MAT'L	SHORT COLUMN YIELD	822,000	23.1×10^6 AT 45° PLASTIC HINGE
SLIDING & FIXED SILL ACTING TOGETHER	SHORT COLUMN YIELD 50,000 PSI MAT'L	1,896,000	53.2×10^6 AT 45° PLASTIC HINGE
END LOAD			
SIDE ASSEMBLIES	SKIN WRINKLING	175,400	223,000 AT 5 IN. DEFLECTION
CORNER POST	BENDING	72,600	216,000 AT 45° PLASTIC HINGE
ROOF FRAMES	SHORT COLUMN YIELD	46,200	666,000 AT 45° PLASTIC HINGE
ROOF PANELS	BUCKLING	3,700	136,000 AT 45° PLASTIC HINGE

Table 3–2. Caboose Failure Load and Energy Characteristics (Sheet 2 of 2)

ELEMENT	FAILURE MODE	LIMIT LOAD (LB)	STRAIN ENERGY (IN.-LB)
COLLISION POSTS	BENDING	317,000	3.01×10^6 AT 10 IN. DEFLECTION
TOTAL LOAD	CAR BODY COLLAPSE ABOVE UNDERFRAME	614,900	4,261,000 AT COLLAPSE
ROLLOVER – LOAD ON SIDE	OF CAR		
SIDE PLATE (1)	BENDING	4,300	21,500 AT 20 IN. DEFLECTION
CORNER POST (2)	BENDING	72,600	363,000 AT 20 IN. DEFLECTION
INTERMEDIATE POSTS (6)	BENDING	66,000	330,000 AT 20 IN. DEFLECTION
SIDE SILL (1)	BENDING	3,400	17,000 AT 20 IN. DEFLECTION
SKIN PANELS (6)	FLAT PLATE BENDING	149,000	745,000 AT 20 IN. DEFLECTION
SIDE OF CAR BODY	COLLAPSES AT TOTAL LOAD	295,300	1,476,000 AT COLLAPSE
ROOF CARLINE	COLUMN BUCKLING (LOADED FROM SIDE)	133,000	4,053,000 AT 45° PLASTIC HINGE

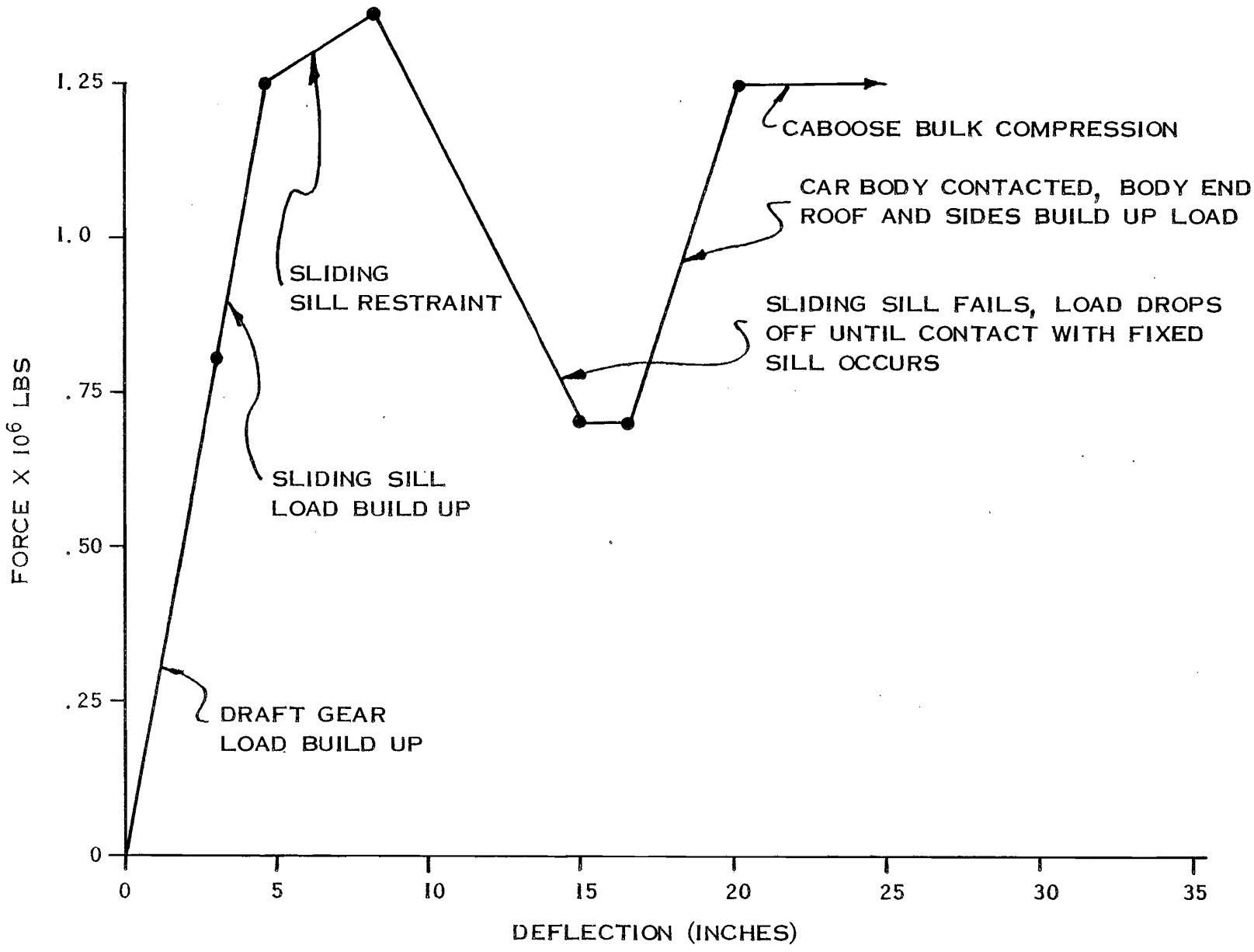

Figure 3–16. Caboose Force-Deflection Curve – Coupler to Coupler Impact – No Override

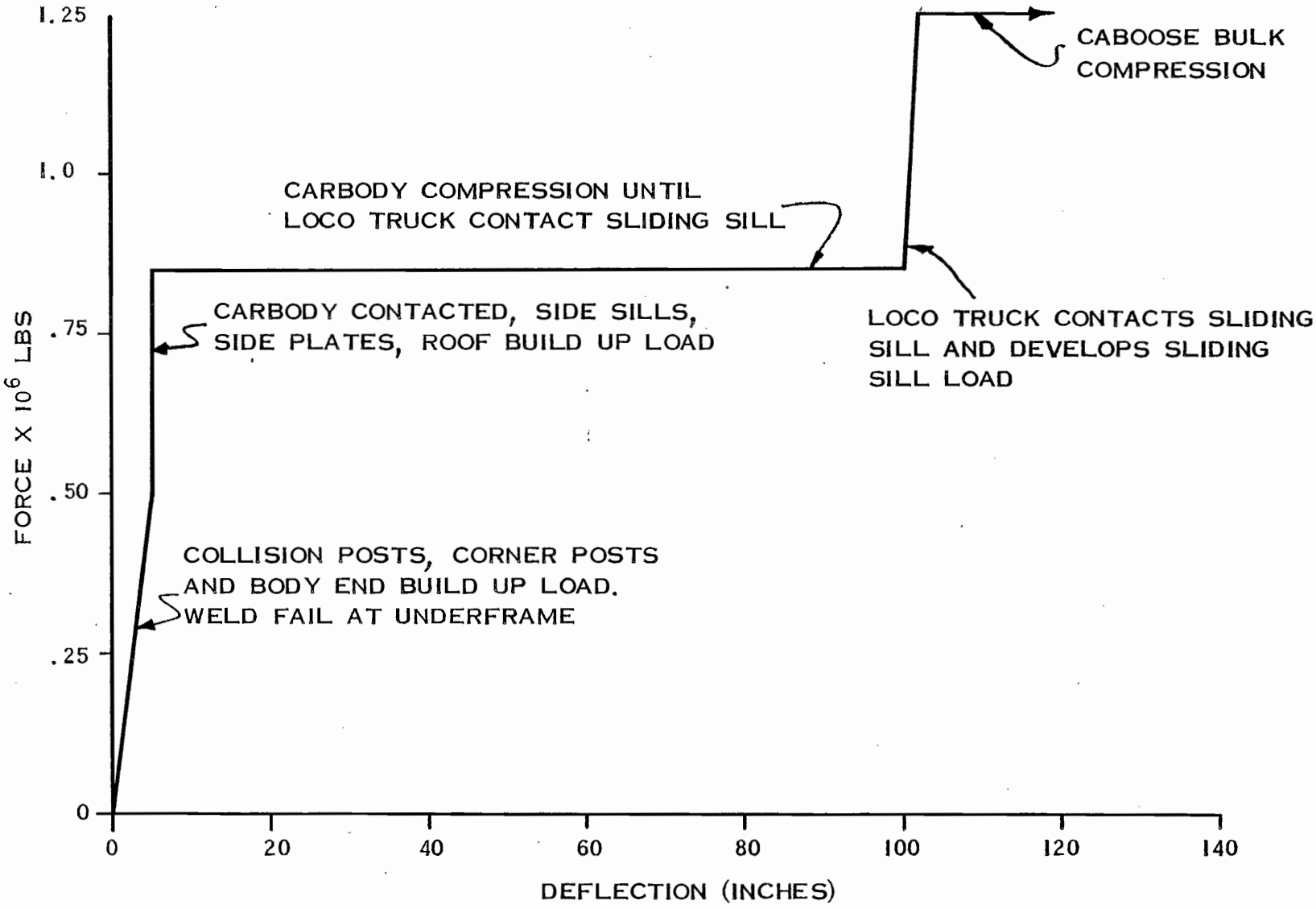

Figure 3–17. Caboose Force-Deflection Curve – Override by Locomotive

Some improvement to the end construction could be accomplished at little cost per caboose. This would be to improve the attachment of the collision post to the underframe. In general the structural assessment of the caboose would be:

Underframe: Good to excellent

Superstructure: Good.

3.3 LOCOMOTIVE STRUCTURAL ANALYSIS

From the Phase I studies it has been established that the single most critical location where fatalities can occur in train operations is the cab of the locomotive. Thus, the major emphasis of the later portion of this program is being concentrated on this critical area. With the close cooperation and assistance of Electro-Motive Division of General Motors (EMD) many aspects of the design philosophies and construction techniques on locomotives were reviewed and analyzed.

3.3.1 Locomotive Specifications

There are no specific AAR structural specifications for the design and construction of a locomotive. Again the basic guide lines adhered to come from Specifications for Freight Car Design, Fabrication and Construction. The AAR standards usually specify things like handholds, steps, grabirons and couplers. Buff or draft load requirements are not given. No specific tests are required. In correspondence with the authors, EMD has supplied the following list of specifications that they use in design and construction of their locomotive:

(1) Material used is an EMD specified low carbon steel called MS4361 which has a yield of 27,000 psi and an ultimate of 50,000 psi.

(2) The underframe is designed to withstand 1×10^6 pounds load without any permanent deformation up to the yield stress.

(3) The underframe will withstand jacking at one end of a complete locomotive with one truck attached to the underframe adjacent to the jacking end and resting at the opposite bolster.

(4) Coupler carriers shall be capable to withstand a vertical load of 50,000 pounds at the center of the carrier. The side supports are to withstand 25,000 pounds load in shear (13,500 psi).

(5) The coupler pocket must withstand 1×10^6 pounds load applied at the rear draft gear stops and 350,000 pounds at the front draft gear stops.

(6) The carbody has no load requirement but must be capable to support the equipment mounted on the carbody at 3 "G" longitudinal load of the equipment.

(7) The underframe bolster must be capable of withstanding the following loads up to yield.

   (a) 120 percent vertical center plate load

   (b) 3 "G" longitudinal of the truck

(c) Bending due to torque (3 "G")

(d) Shear due to torque plus longitudinal load.

(8) Secondary members in the underframe must be capable to withstand 120 percent vertical load and 3 "G" longitudinal load of the component equipment weight.

(9) The truck retention (side bearing clip) must be capable of lifting the truck during jacking operations and retain the truck to the underframe during a minor derailment.

(10) EMD does not have a specification for anti-climber. They will design the anti-climber to the customer specifications. In the case of AMTRAK, the design requirement was 150,000 pound vertical load.

Generally the customer issues a specification to the manufacturer who bids on the order. The customer specifications may require certain structural features to be included in the locomotive. However, normally the above listed items are the only structural requirements used.

Notice that in neither the EMD list, AAR or Federal government specification is there mention of a single requirement to design a locomotive for crashworthiness at the time of analysis.

3.3.2 Vehicle Selection

There are many types of locomotives operated by the United States railroads. They range in weight from a lightweight industrial 50,000 pound diesel electric to the 477,000 pound GG-1. In this study, vehicles to be analyzed are limited to intercity long haul type locomotives. The majority of long haul type locomotives in use today are manufactured by the Electromotive Division of General Motors (EMD). EMD is a subcontractor to Boeing on this study therefore it is natural to select an EMD locomotive so that we could benefit from their many years of experience in the locomotive industry.

EMD makes two basic long haul models, the GP-40 and the SD-40. The major difference between the models is weight and power. The GP-40 is a four axle locomotive weighing about 250,000 pounds while the SD-40 is a six axle locomotive weighing about 350,000 pounds. Both models are constructed essentially the same except the SD model has a longer underframe.

The same cab structure and hoods are present on both types. The GP cab is closer to the end of the locomotive. It was felt that any analyses or recommendations developed for GP models could be modified more readily to adapt them to the longer, stronger, heavier SD models than if the reverse technique were used. Therefore, the locomotive selected for analysis is the GP-40 manufactured by EMD. Figure 3-18 shows the GP-40 locomotive.

3.3.3 Basic Structural Description

The GP-40-2 model EMD locomotive structure consists of an underframe which is essentially a shallow beam uniformly loaded and simply supported on two points (truck bolsters) with

Figure 3–18. EMD GP-40 Locomotive

a sheet metal cab and hood structure on top of the underframe which supports some of the above deck equipment and protects the crew and equipment from the elements.

Underframe

In addition to carrying the static vertical load, the underframe also transmits the tractive effort and braking forces from the trucks via the center plate to the drawbar or coupler and when used in multiple, transmits both drag and buff loads from coupler to coupler.

The underframe consists of a one inch thick x six foot wide bottom plate with center sills made by splitting a 30 WF 210 pound beam longitudinally and welding the two TEE shaped halves of the wide flange beam to the top of the bottom plate.

Lateral structure is added between the center sills at the two bolsters and as required to support major equipment. Nominally the top of the underframe is 61-3/4 inches above the top of the rail.

Draft Gear and Coupler

Mounted to the underside of the bottom plate at each end of the underframe is a fabricated "pocket" which carries the draft gear and coupler. The centerline of the coupler is nominally 33-7/8 inches above the top of the rail with the result that longitudinal coupler loads are approximately 18 inches off the underframe natural axis.

Hood and Cab — General

The "above deck" structure consists of a short (or No. 1) and a long (or No. 2) hood. Interposed between these two hoods is the control compartment or cab and the electrical cabinet. Whereas the hoods and electrical cabinet are mounted directly to the top of the underframe, the cab is raised 27 inches off the top of the underframe as a result of having a sub base interposed between it and the underframe. The hoods and electrical cabinet are six feet wide while the sub base and cab are ten feet wide.

Short Hood — The short hood is approximately 70 inches tall and is covered with No. 11 gauge sheet steel. Behind the forward point of this structure is an inside wall to form a sandbox with capacity of 28 cubic feet. Just back of the sandbox on each side of this hood is a 3/4 inch plate welded as a post to the top of the underframe center sills. These posts are 54 inches high and are intended to increase the collision strength of the locomotive.

Two separate modifications are made to this structure when requested by the customer. By deepening the sandbox approximately 10 inches, the sand capacity is increased from 28 to 34 cubic feet. To increase the collision strength of the locomotive, the frontal skin of the short hood can be increased from 1/8 inch thickness to 1/2 inch thick. When this modification is provided, the two collision posts are also modified, increasing their longitudinal (fore to aft) strength.

Sub Base – The sub base is an open angle frame construction with bolted on or hinged covers to provide the necessary outside finish to the locomotive. Battery boxes are located in the sub base just forward of the front wall of the cab outboard of the short hood.

Cab – The cab structure is essentially No. 11 gauge channel section steel with an outside skin of a No. 11 gauge and an inside liner of No. 24 gauge perforated metal. Because of the desirability of good visibility for the crew, the vertical posts supporting the cab roof are kept to a minimum to permit large window areas and access doors as wide as possible.

Long Hood Structure – The long hood including the inertial filter section is slightly over 39 feet in total length and consists essentially of a 2 x 10 x 1/4 inch thick base angle which is permanently welded to the underframe and a removable hood section which is bolted to the base angle. The bolted on hood consists of channel and angle frame covered with No. 11 gauge sheet metal skin. Along both sides of this hood are doors approximately 6 feet high to permit maintenance of the equipment inside.

The rear end of the long hood contains a second sandbox similar to the one mounted in the short hood. There are no collision posts in this hood.

3.3.4 Structural Analysis

The GP-40 locomotive has been analyzed using methods of classical stress analyses, KRASH program, STKWKT program and methods developed in Reference 4. Results acquired include critical failure loads, energy absorption levels and element force deflection curves of major structural locomotive components. The analyses show where plastic hinges form and how the formation of these hinges affect the absorption of energy and vehicle crushing. Total vehicle force deflection curves are developed for accident scenarios to determine total car crush. These curves are than used to determine vehicle crushing distances which lead to areas of the vehicle that must be protected. Figure 3-19 shows the major structural areas of the GP-40 locomotive that are analyzed. Loading conditions which would occur in certain accidents were also analyzed. Climbing of a vehicle onto the front end of the locomotive above the underframe to determine the crush strength of the short hood and locomotive cab. A rollover condition which would vertically crush the locomotive cab has been analyzed. These analyses lead to structural improvement recommendations that would improve the locomotive crashworthiness.

Underframe

The GP-40 underframe is shown in Figures 3-20 to 3-23. The center sill is the prime load carrying member both for static vertical load and longitudinal load. Longitudinal (Buff or Draft) load is transmitted from the coupler to the draft gear into the draft gear pocket and then shear into the underframe with the resulting moment reacted at the kickplate and endplate.

There is additional capability that can be taken into account on the underframe. The areas represented by walkways and the walkways support have not been used in this analysis.

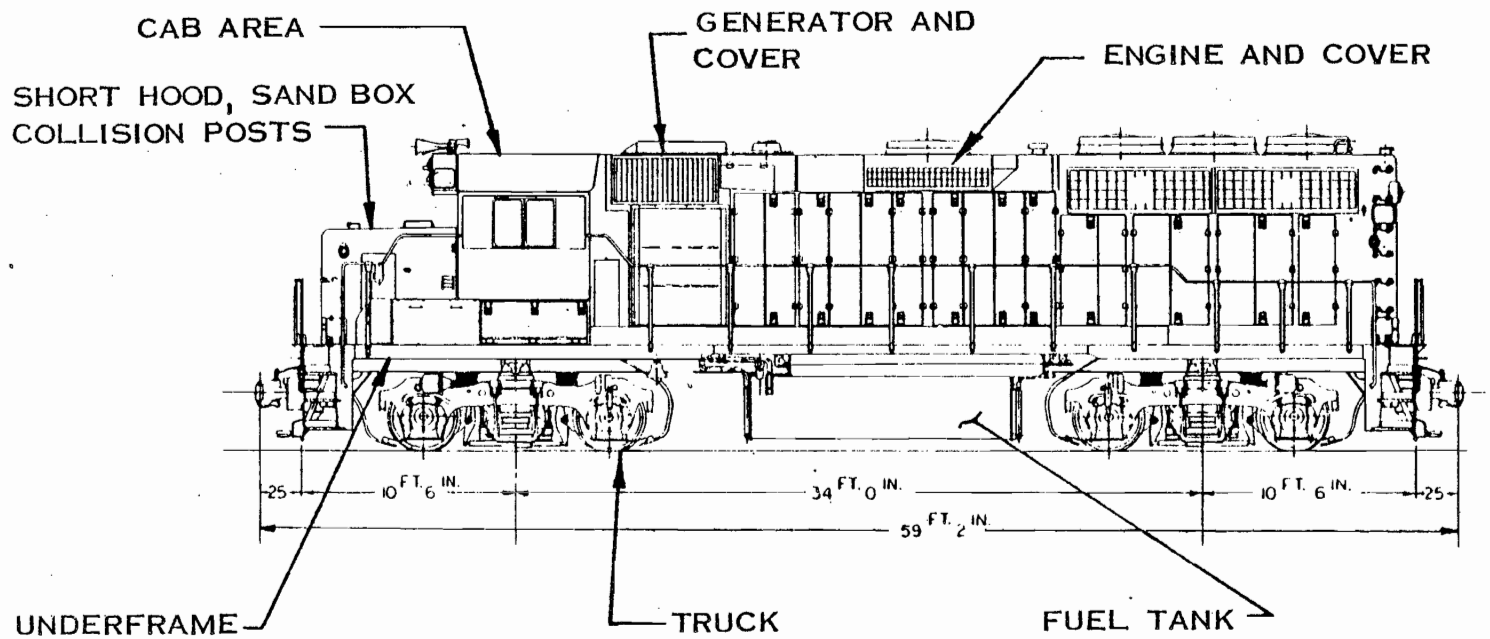

Figure 3–19. Major Structural Elements — GP-40 Locomotive

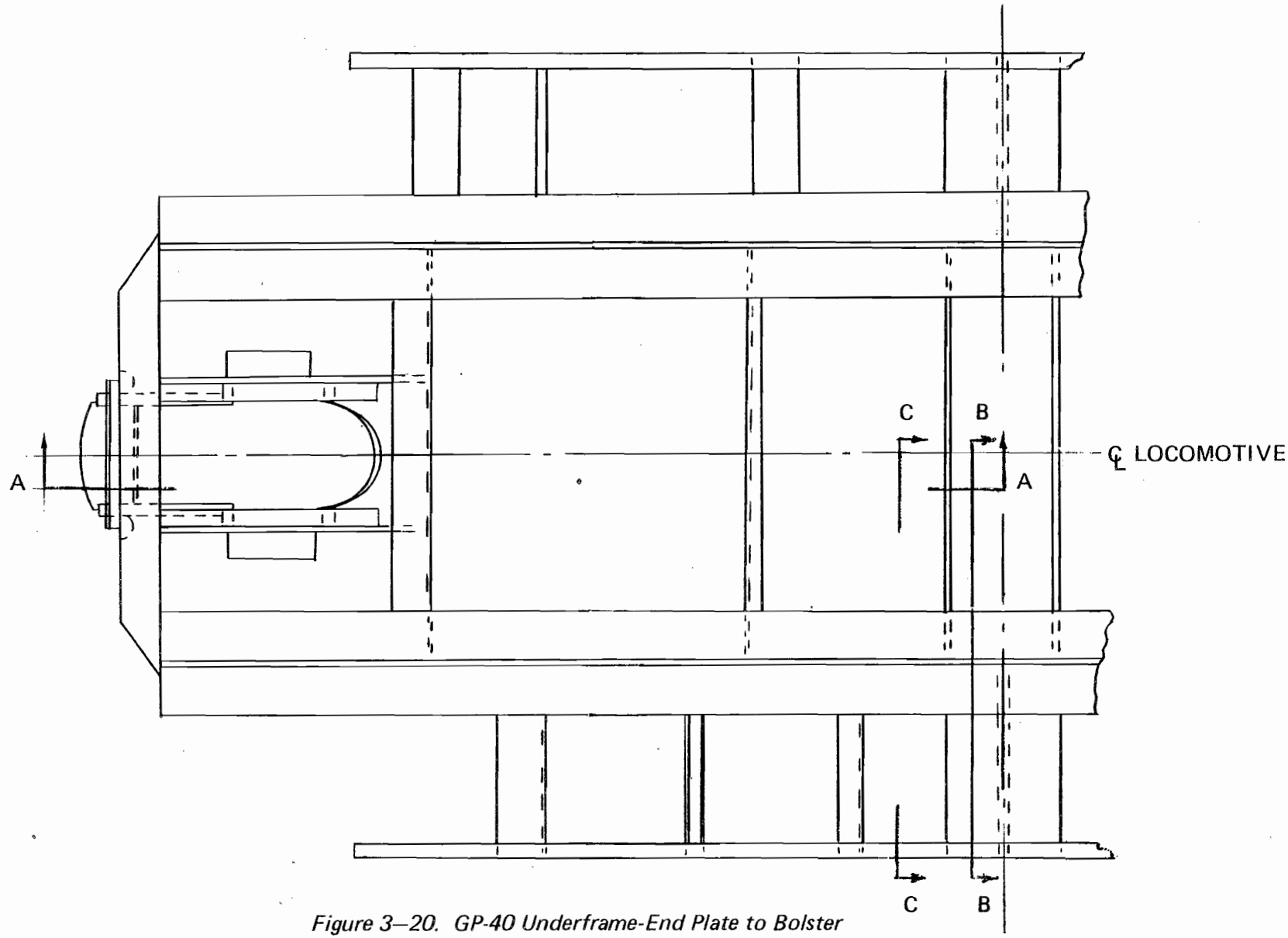

Figure 3—20. GP-40 Underframe-End Plate to Bolster

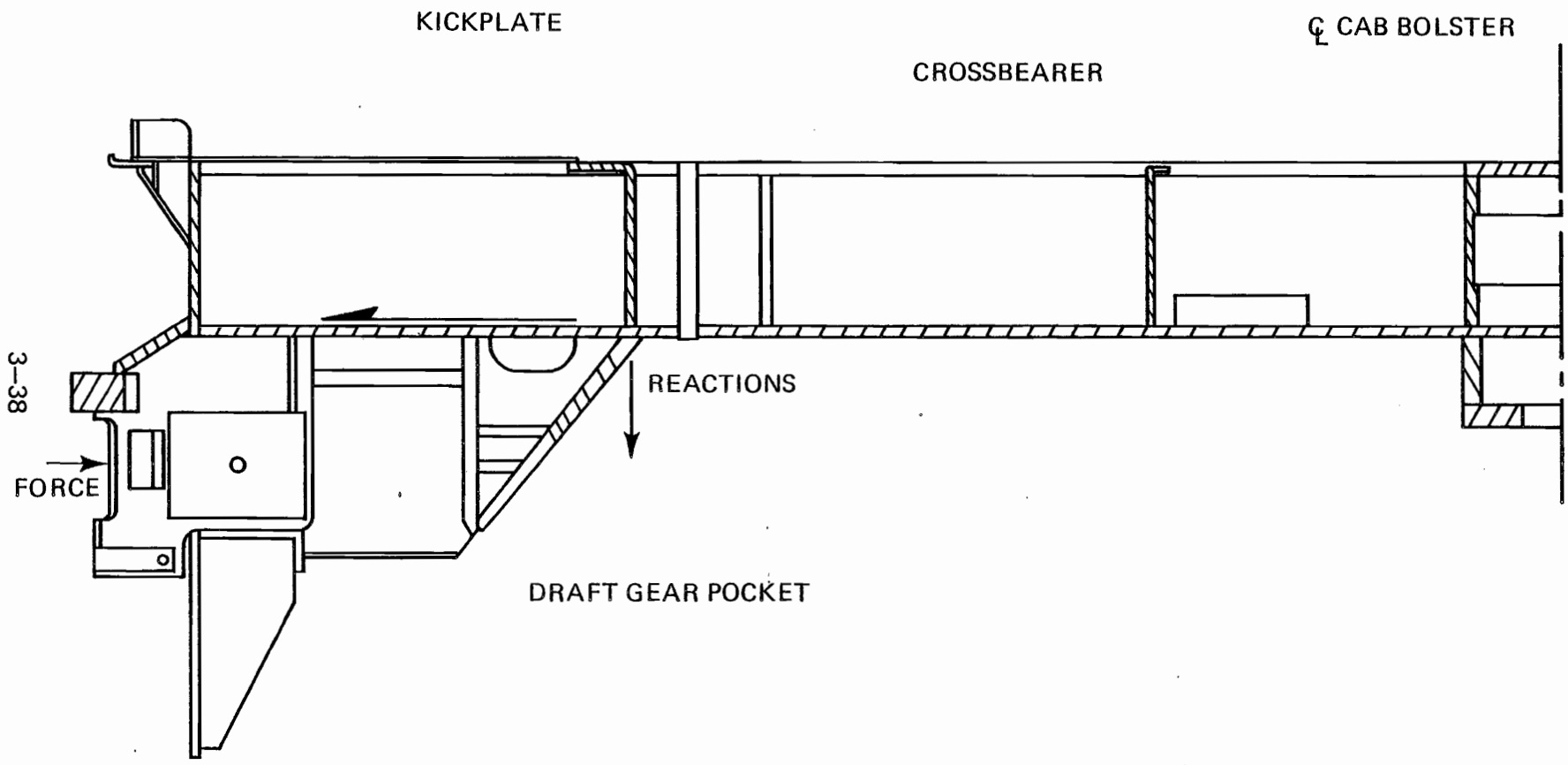

Figure 3–21. Section A–A, Longitudinal Section Through Underframe

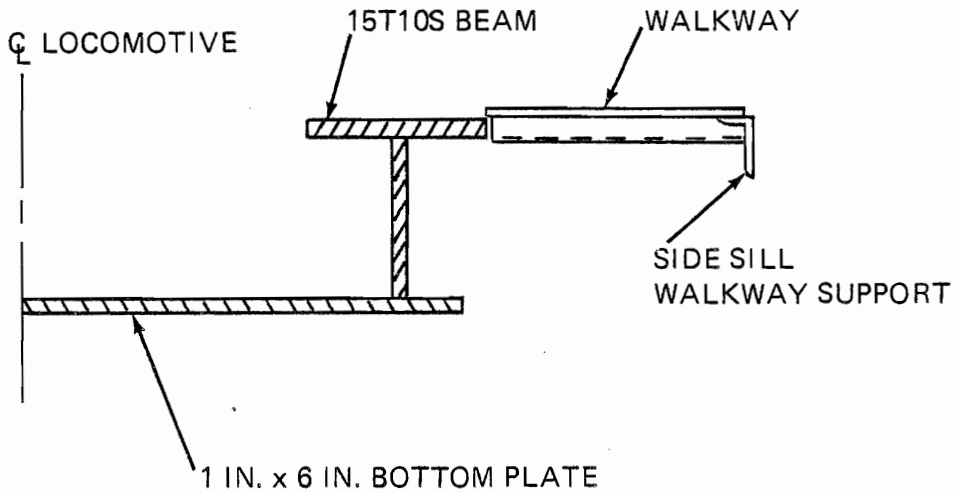

Figure 3–22. Section C–C, Typical Underframe Cross Section

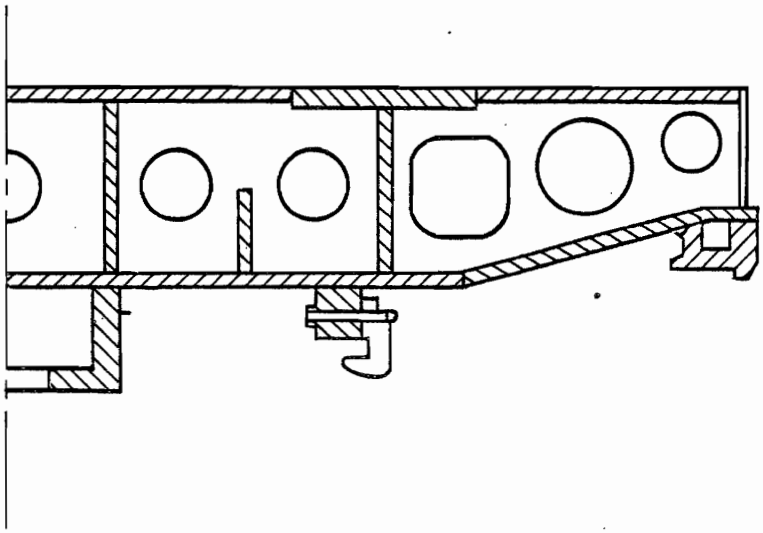

Figure 3–23. Section B–B, Bolster

The loads introduced into the center sill are self-contained in the center sill. Very little if any load is transferred to the walkway supports. However, in static buff tests of a bare underframe versus a complete locomotive, the hoods and cab had a definite stiffening effect in the underframe.

Draft Gear

The locomotive draft gear is a National Rubber Double Acting Cushioned type NC390 or NC391. The draft gear is mounted in the draft gear pocket mounted below the underframe. (See Figure 3-21.) The draft gear has a maximum deflection of two inches on the draft gear pocket. The striking block is supported by a front plate which is attached to end plate and bottom plate of the center sill.

For purposes of analysis, the curve shown in Figure 3-24 was used for the coupler draft gear system. The initial spring constant was 230,000 pound/inch changing to 1.45×10^6 pounds per inch.

As the rubber draft gear begins to deform excessively, the load is transferred through the rear stops at its maximum deflection. The coupler horn then contacts the striking block at two inches deflection allowing the load to build up to the maximum center sill load of 1.75×10^6 pounds.

Draft Gear Pocket

The draft gear pocket is shown in Figure 3-24. The pocket is welded to the bottom plate and the end plate of the underframe. The pocket carries all loads from the coupler-draft gear assembly and transmits these loads to the underframe. The design loads are 350,000 pounds draft and 1×10^6 pounds buff. The draft gear is subjected to bending moments and axial load because of the eccentricity of the buff load. The limiting factor is the weld size which attaches the draft gear pocket sides to the bottom plate.

Engine Attachment

There are eight one-inch diameter bolts and two one-inch diameter dowels that attach the engine to the underframe. The bolts are standard steel.

Generator Attachments

The generator is attached to the center sill with four one-and one-half inch bolts and two 5/9 inch diameter dowels.

Anticlimber

There is no specific design criteria for an anticlimber installation on an EMD locomotive. It is generally designed to customer specifications. A typical anticlimber arrangement is shown in Figure 3-25. In a collision sequence where the anticlimber comes into play a plastic hinge would develop at the end plate.

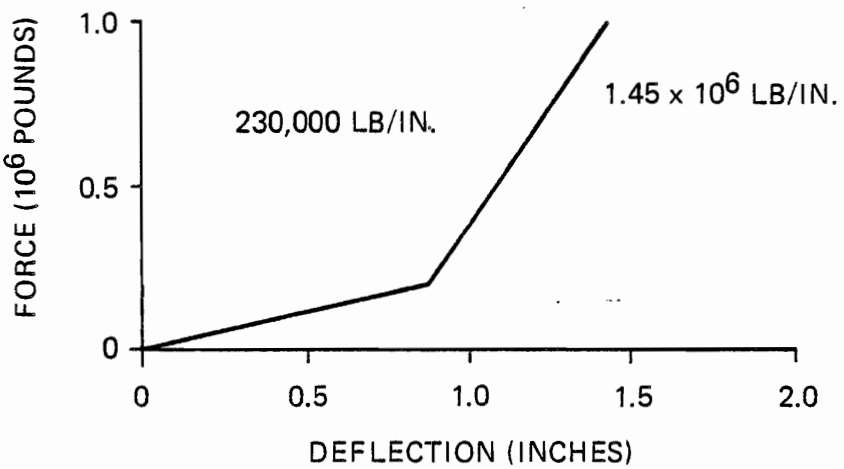

Figure 3–24. Idealized Locomotive Draft Gear Force Deflection Curve

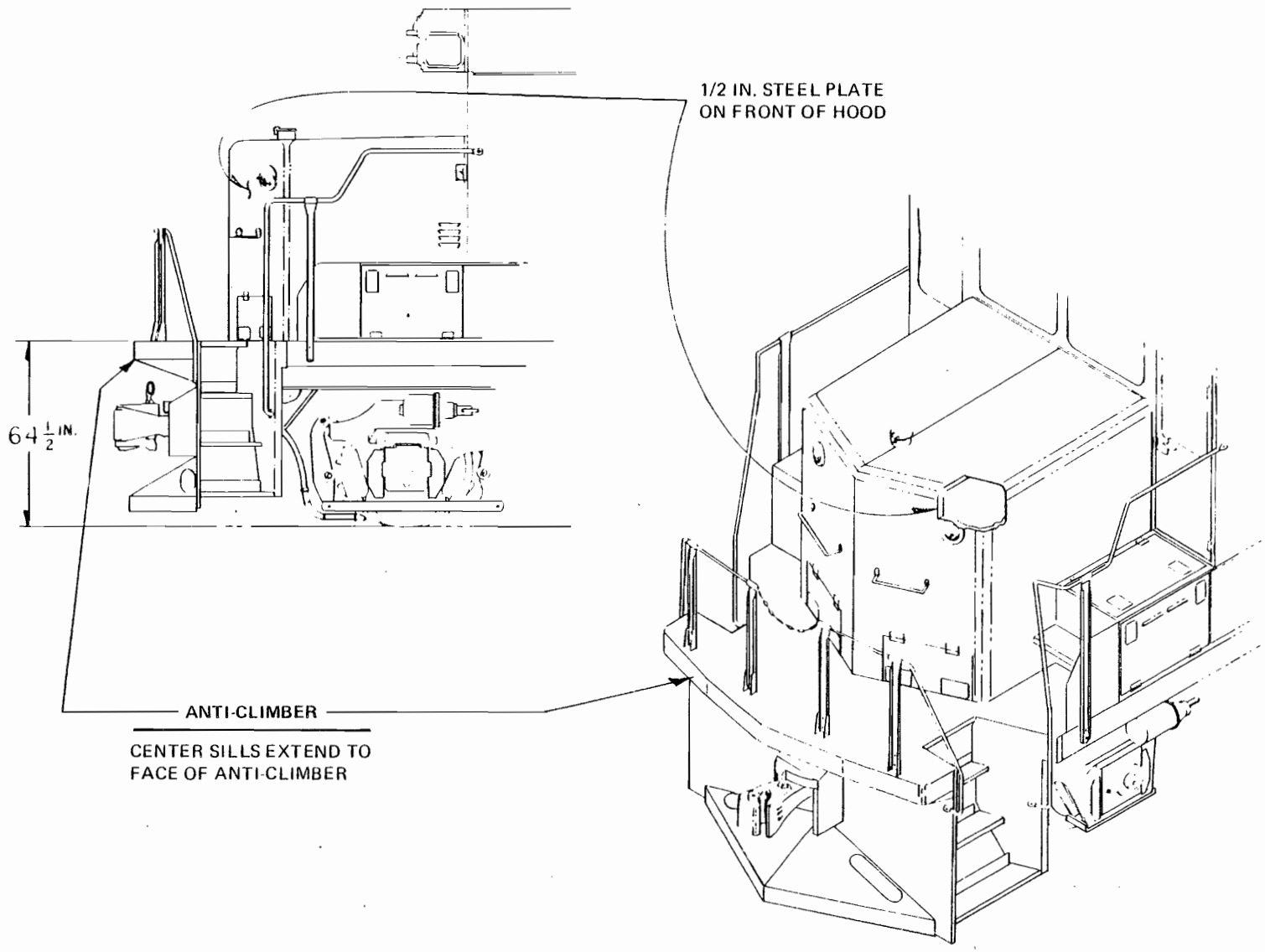

Figure 3–25. Locomotive Anticlimber and Hard Nose Hood

The anticlimber is usually not effective in preventing climbing because the climbing vehicle usually clears the anticlimber. The anticlimber would probably be more effective if it protruded out further from the underframe. However, if it protrudes past the coupler, this would introduce operational problems in coupling vehicles. How far should the anticlimber protrude is a significant question. Tests for determining the cause of climbing and the effectiveness of the anticlimber would have to be done.

Cab Structure

The GP-40 locomotive cab has been analyzed for two loading conditions which would cause crushing of the cab and in effect jeopardize crew safety. The first is a uniform vertical load which is applied to the cab roof. This condition represents a rollover accident or a climbing vehicle coming down on the cab roof. The second condition is where a uniform longitudinal load is applied to the short hood of the locomotive. This condition represents a climbing vehicle overriding the underframe of the locomotive and crushing the structure longitudinally.

Vertical Load — To determine the load capacity of the cab roof under uniform vertical load the structure has been broken down into these major components:

(1) Roof sheet panels
(2) Roof framing channels
(3) Roof side supports
(4) Support columns.

Roof deflections were taken to the top of the support columns to prevent any reduction in the cab's interior volume. Figure 3-26 shows the results of this analysis.

Longitudinal Load — To determine the load and energy capacity of the short hood under longitudinal load, the structure was broken down into these major components:

(1) Collision posts
(2) Hood end assembly
(3) Hood sides.

Hood and sides were allowed to deflect to the occupied area. This deflection will not invade the cab interior, therefore, maintaining the cabs survivable volume. Figure 3-27 shows the results of this analysis.

Failure Load and Energy Characteristics

The results of analyses of major structural elements of the locomotive to carry load and absorb energy are presented in Table 3-3. This table is used to prepare force deflection curves for the vehicle in different accident scenarios. These vehicle force deflection curves are discussed in detail in paragraph 3.3.5.

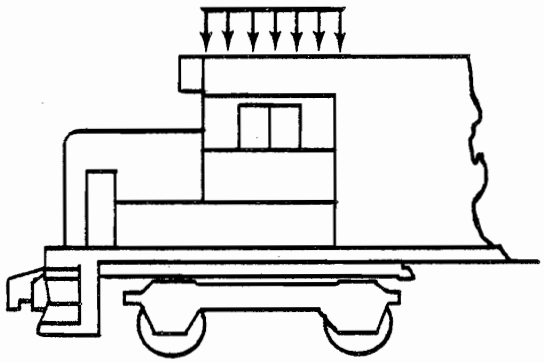

ITEM	YIELD LOAD (LB)	ENERGY ABSORBED (IN.-LB)
1. ROOF SKINS AND FRAMING	134,400	1,244,000 @ 20" DEFLECTION
2. ROOF SIDE SUPPORTS	5,600	112,400 @ 30° PLASTIC HINGE
3. ROOF SUPPORT COLUMNS	140,800	1,255,000 @ 30° PLASTIC HINGE
TOTAL	280,800	2,711,400 @ COLLAPSE

ASSUMPTIONS:

1. ROOF WILL CRUSH TO TOP OF SUPPORT COLUMNS (~20")
2. ROOF COLUMNS WILL HAVE A 30° PLASTIC HINGE

Figure 3–26. Cab Vertical Yield Load and Energy Absorption Capability

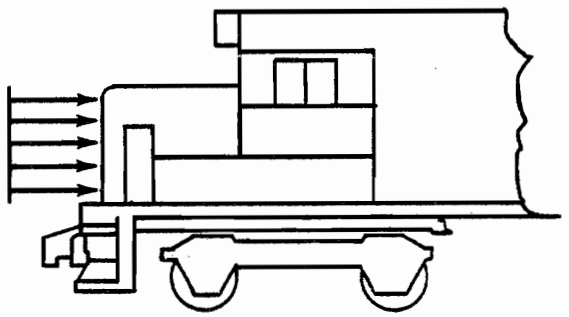

ITEM	YIELD LOAD (LB)	ENERGY ABSORBED (IN.-LB)
COLLISION POSTS	96,000	1,203,000 @ 45° PLASTIC HINGE
HOOD END ASSEMBLY	12,000	119,300 @ 20" DEFLECTION
CAB SIDE PANELS	21,300	318,600 @ 30° PLASTIC HINGE
TOTAL	129,300	1,640,900 @ COLLAPSE

ASSUMPTIONS:

1. COLLISION POSTS HAVE A 45° PLASTIC HINGE
2. HOOD CRUSHES BACK TO COLLISION POSTS (~20")
3. SIDE PANELS HAVE A 30° PLASTIC HINGE

Figure 3–27. Short Hood Longitudinal Yield Load and Energy Absorption Capability

Table 3–3. Locomotive Load and Energy Characteristics

ELEMENT	FAILURE MODE	LIMIT LOAD (LB)	STRAIN ENERGY (IN–LB)
CENTER SILL	AXIAL COMPRESSION-SHORT COLUMN YIELD	1,750,000	1.29×10^9 AT 45° PLASTIC HINGE
ENGINE ATTACHMENTS	SHEAR YIELD OF BOLTS & DOWELS	285,000	
GENERATOR ATTACHMENTS	SHEAR YIELD OF BOLTS & DOWELS	324,000	
CAB STRUCTURE	CRUSHING LOAD VERTICALLY		
ROOF PANELS & SUPPORTS	PLATE YIELDING FOR PANELS BENDING YIELD FOR SUPPORTS	134,400	1,344,000 AT 20" DEFLECTION
ROOF SIDES	BENDING YIELD	5,600	112,400 AT 30° PLASTIC HINGE
ROOF COLUMNS	AXIAL COMPRESSION-YIELD	140,800	1,255,000 AT 30° PLASTIC HINGE
TOTAL VERTICAL	COLLAPSE ROOF STRUCTURE	280,800	2,711,400 AT COLLAPSE
CAB STRUCTURE	CRUSHING LOADS LONGITUDINALLY		
COLLISION POSTS	BENDING AT UNDERFRAME ATTACHMENT	96,000 FOR 2 POSTS	1,203,000 AT 45° PLASTIC HINGE
SHORT HOOD END	PLATE YIELD 2 PANELS	12,000	119,300 AT 20" DEFLECTION
SIDE PANELS	COMPRESSION BUCKLING OF SHEET	21,300	318,600 AT 30° PLASTIC HINGE
TOTAL LONGITUDINAL	COLLAPSE FRONT END	129,300	1,640,900 AT COLLAPSE

3.3.5 Force Deflection Characteristics

Force deflection curves for the GP-40 locomotive have been developed using the results shown in Table 3-3 and the static test results. These static load applications follow a minimum energy path of failure through the elements and continues as the stronger elements fail. The final portion of these curves represent the compression of compacted materials as in bulk modules testing.

Three accident scenarios have been developed in the formation of the force deflection curves One scenario involves a head end or rear end collision in which there is no climbing vehicle. The second is a rear end or head end collision in which the locomotive underframe is overriden and the overriding or climbing vehicle leaves its trucks behind. The third is a rear end or head end collision with an overriding vehicle with truck retention. The three scenarios are presented in Figures 3-28 to 3-30 and the sequence of events is listed on each figure. In Figure 3-30 where truck retention is assessed, the retention system is not strong enough to develop the underframe strength. Nowhere in this scenario is the underframe strength ever fully developed. In Table 3-3 it can be seen that the underframe is the major load carrying element of the locomotive. Its resistance to crush is not matched by any other element in the locomotive. Also note in Figures 3-28 and 3-29 that the short hood and cab offer very little resistance to longitudinal crush. This fact verifies accident data that shows crushing as the major cause of fatalities in locomotives in head and rear end collision. All data and analyses point to improved crush resistance as the major way to save lives assuming crash dynamics and operational characteristics remain the same.

3.3.6 Structural Assessment

Analyses done in this phase of the contract confirm the preliminary conclusion stated in the Phase I Report. The locomotive underframe is the major load carrying element and offers the most resistance to crushing load. In most accidents, the underframe remains intact, keeps its shape and therefore is not a casual factor in locomotive fatalities. This last statement must be modified by stating that when the locomotive is the overclimbing vehicle, the underframe acts like a battering ram wiping out everything in its path.

The superstructure which consists of the short hood, cab area, and long hood offer very little resistance to crushing load. The engine and generator can be sheared from their underframe attachments during an impact from the rear. The short hood and collision posts do not offer any significant resistance to penetration under the standard design configuration. Rollover protection for the cab must be increased. The analyses point to the need for a survivable volume to be incorporated into the locomotive cab design. The structure should be designed so that the loads are reacted into the underframe and to the bulkheads at the rear of the cab. The present electrical cabinet could be put to good use as part of this bulkhead.

The crashworthiness structural assessment of the locomotive can be stated thus:

Underframe	Good to Excellent
Superstructure	Poor.

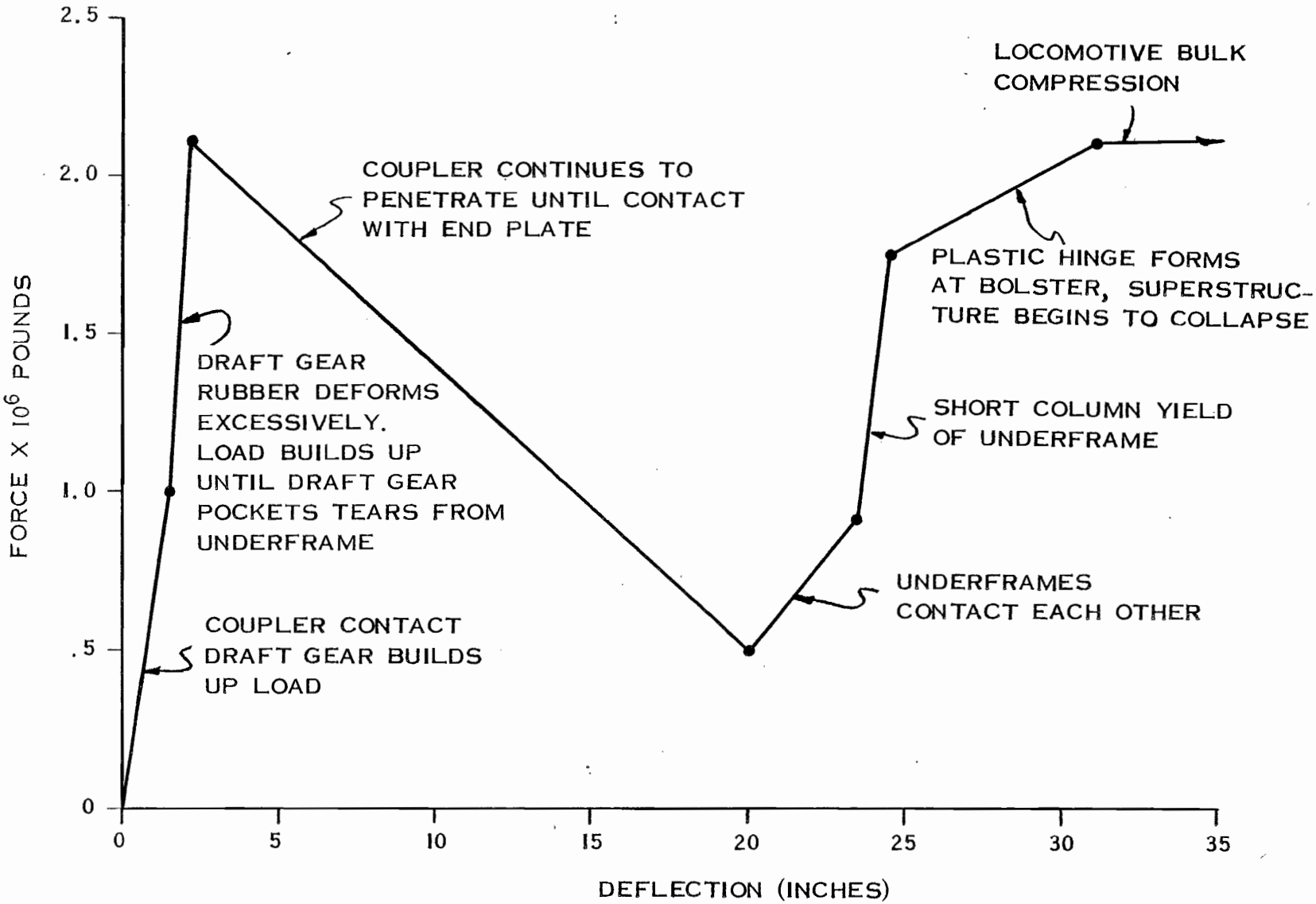

Figure 3–28. Locomotive Force Deflection Curve-Coupler to Coupler Impact — No Override

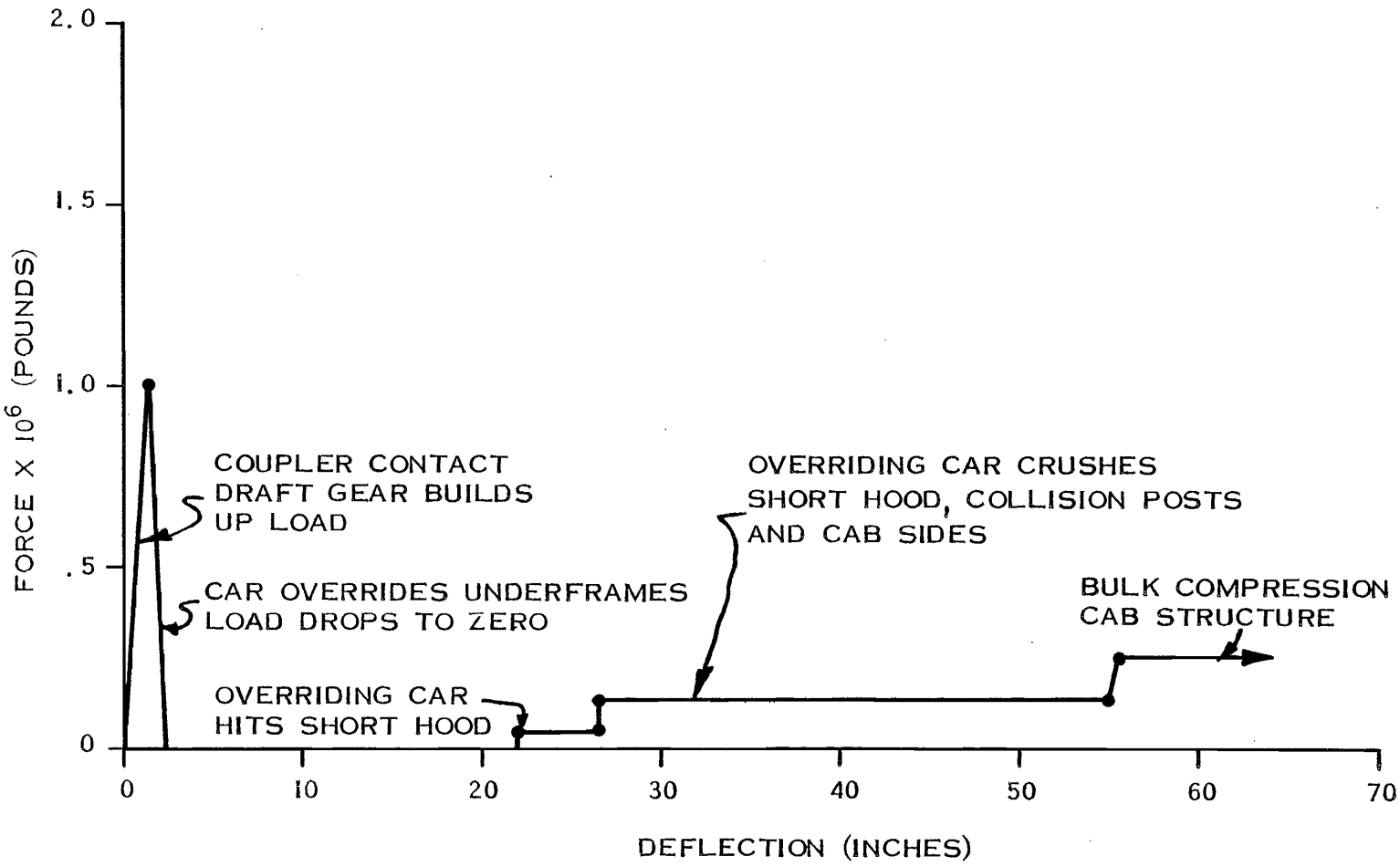

Figure 3–29. Locomotive Force Deflection Curve — Override of Locomotive Underframe — No Truck Retention

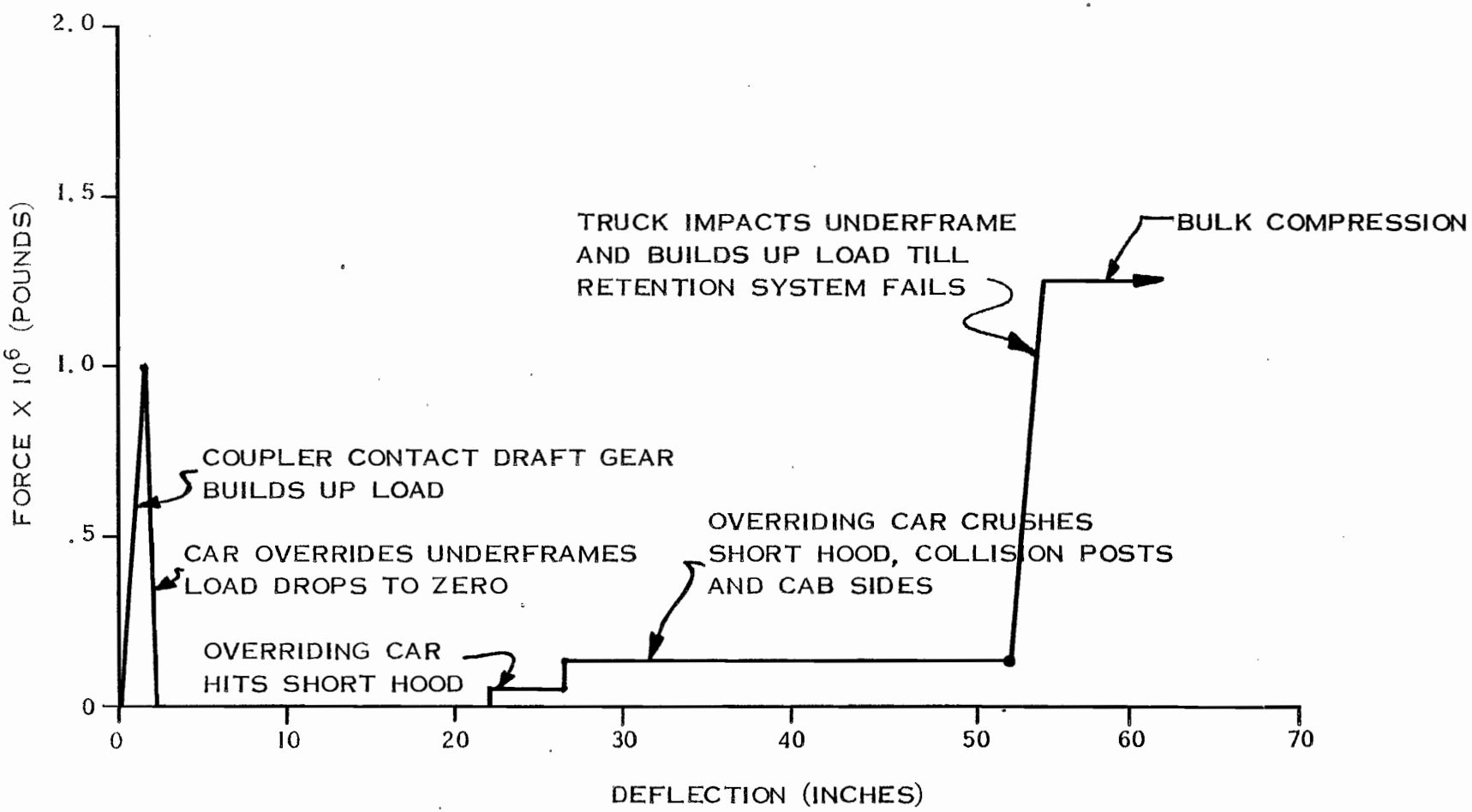

Figure 3–30. Locomotive Force Deflection Curve – Override of Locomotive Underframe – Truck Retention

3.3.7 Recommendations and Conclusions

The objective of a crashworthy locomotive cab design would be to protect the crew by maintaining a survivable volume primarily in a collision environment where a climbing vehicle is impacting the locomotive. Ways of achieving this objective include, deflector type designs that would keep the climbing vehicle from impinging on the cab structure; an anti-climbing system that would not allow climbing but would trap the vehicle before it could rise from the tracks; design the structure to deform under load while not intruding into the occupied area. Other concepts include empty cars in front of the occupied locomotive; moving the cab into the center or rear end of the locomotive.

From analyses and data reviews, certain areas that could be improved were readily apparent:

(1) All cab superstructure members should be provided with a load path to the underframe. This includes the roof, sides and collision posts.

(2) Stronger collision posts are required in addition to better attachments to the roof and underframe. They should be slanted at some optimum angle.

(3) A more effective anticlimbing system should be utilized. Compatibility between anticlimbers of freight car and cabooses with locomotives is nonexistent.

(4) Sides and roof should be provided with rollover protection.

(5) Antitelescoping plates in the roof of cab.

(6) Welds and joints should allow maximum load development of attaching members.

(7) Underframe must have a controlled collapse design.

(8) Hard nose plate and horizontal members between collision posts that would prevent penetration.

Figure 3-31 shows a possible design for a cab that incorporates most of the above concept.

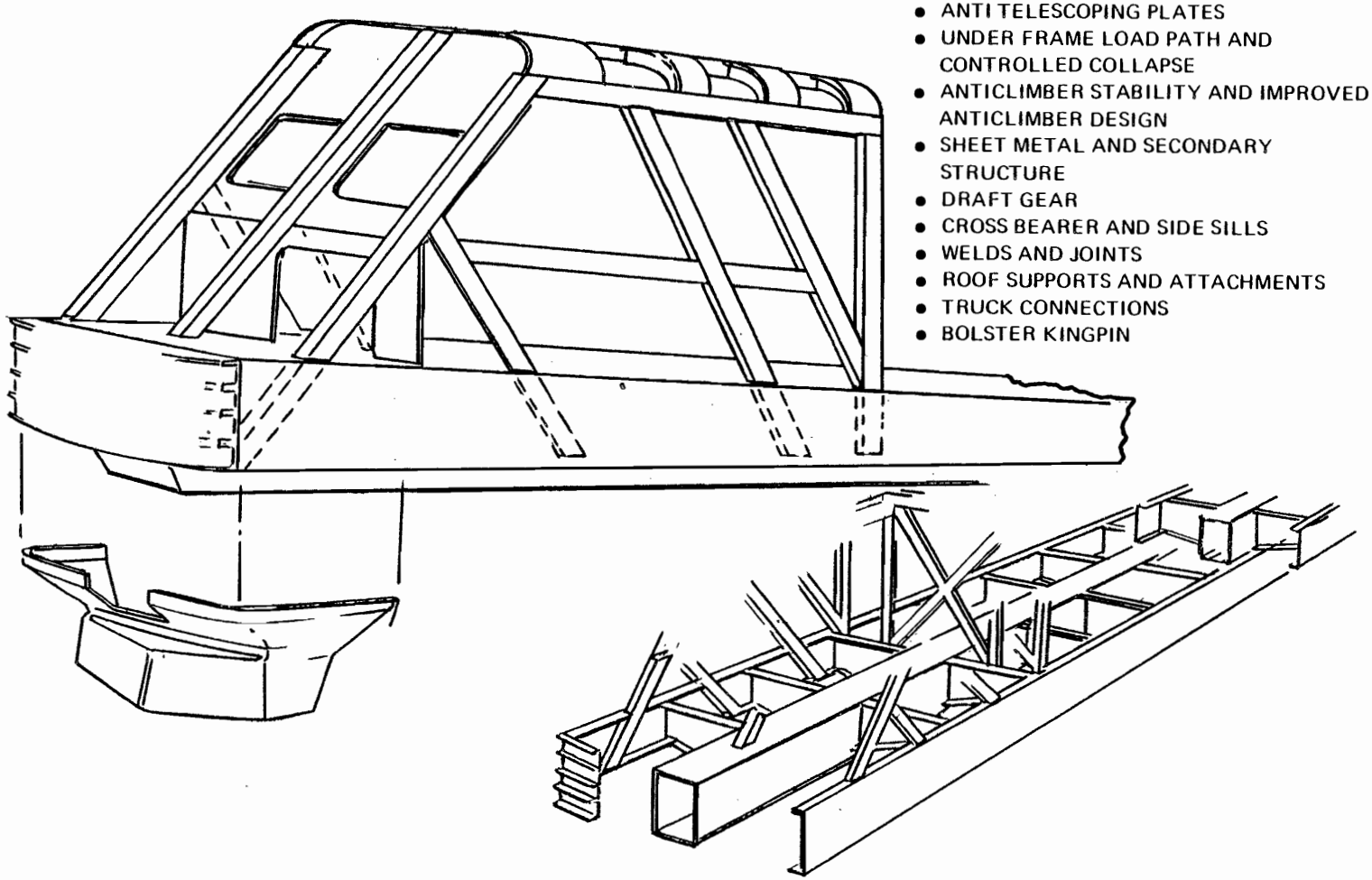

REQUIREMENTS

- COLLISION END POSTS
- ANTI TELESCOPING PLATES
- UNDER FRAME LOAD PATH AND CONTROLLED COLLAPSE
- ANTICLIMBER STABILITY AND IMPROVED ANTICLIMBER DESIGN
- SHEET METAL AND SECONDARY STRUCTURE
- DRAFT GEAR
- CROSS BEARER AND SIDE SILLS
- WELDS AND JOINTS
- ROOF SUPPORTS AND ATTACHMENTS
- TRUCK CONNECTIONS
- BOLSTER KINGPIN

Figure 3–31. Possible Structural Layout for Baseline Crashworthy Cab

4. COLLISION DYNAMICS

4.1 INTRODUCTION

Collision dynamics technology is in an early stage of development. The role of mass structural and geometric properties in dynamic response of vehicles in collisions has not been clearly established. The analytical tools for treating the non-linear properties of the deforming structures are also in an early stage of development. Despite these limitations the results of these analyses are instructive in indicating the direction for improving the collision response of the vehicles. The analytical efforts have shown some progress in this treatment.

In this phase of the study, the emphasis is on collisions involving locomotives and caboose. As measured by total casualties, the most significant collision case is the rear-ender involving locomotives and cabooses. The case of locomotives colliding with other rail cars such as freight or passenger cars is a sub case of the locomotive-caboose collision. The head-on collision between trains headed by locomotives is also of importance.

The locomotive-caboose collision has three general responses; crushing of the vehicles, override of one vehicle by another usually the caboose over the locomotive; and derailment deflecting one or both vehicles to the side. From the accident data, the override case is the predominant case of fatalities.

Figure 2-3 shows override may occur across the speed range. Also in the lower speed ranges, override does not occur in every accident, while at the higher speeds it nearly always occurs. Mechanisms for overriding appear to be associated with weak effects such as the relatively small vertical component of collision buff forces arising from misalignment, vehicle motion, or structural deformations that have some probability of occurrence.

The purpose of the collision dynamics studies is to lead to solutions for preventing casualties by either modifying the dynamic response or by providing protection in the form of survivable volume.

Recent FRA sponsored studies have treated the dynamics of collision particularly at low closing speeds. The tank car head puncture problem due to coupler penetration at humping velocities has been treated. Mechanisms for decoupling and coupler override have been proposed. These mechanisms involve interactions of carbody motion and involve the vertical component or buff force due to misalignment and eccentricity. Test data is being obtained in other current programs which will provide a basis for understanding the process and for improving the analytical treatment.

In the studies presented herein, three types of analyses tools have been used to treat collision dynamics for the locomotive-caboose case. The first and simplest is the unidirectional analysis (WATFOR) of two trains colliding using individual car masses and vehicle force deflection curves. Results of this type of analysis are useful in defining in gross terms the energy absorption distribution throughout the colliding trains. See Reference 4—1.

Of particular interest is the phenomenon of climbing. The caboose body rises above the locomotive cab as the locomotive advances. Some insight into caboose motions is obtained using the three degrees of freedom collision model.

Reference 4—1. Tong, P.; Mechanics of Train Collision, DOT-TSC-FRA-76-S, April, 1976.

The third analysis tool uses the Krash program to include the effects of structural deformation on the motions. Table 4-1 summarizes the three methods and parameters used in the analyses.

4.2 SIMPLE UNIDIRECTIONAL ANALYSIS (WATFOR)

The simple unidirectional analysis (Reference 4) has been conducted on the GP-40 locomotive and CA-10 caboose to illustrate crush properties of these vehicles. These vehicles are representative of the state-of-the-art but are not necessarily representative of the fleet.

Force-deflection curves were generated for each vehicle. The GP-40 locomotive with no override in a head-on collision force deflection curve is shown in Figure 3-28. The scenario is given on the figure. In Figure 3-29, the force deflection curve for the override scenario is shown.

Comparison of Figure 3-28 to Figure 3-29 indicates the lack of resistance of the short hood forward locomotive cab structure in the override case. This lack of resistance is confirmed by the accident data. These data show the cab to be demolished when override occurs.

Force deflection curves for the CA-10 caboose are given in Figures 3-16 and 3-17.

To determine crush resistance of the locomotive and caboose in a rear end collision, a simple problem was used. Force deflection curves for the locomotive and caboose were used. A train of three locomotives impacts a caboose backed up by four loaded freight cars. The combined crush of the lead locomotive and the caboose is shown in Figure 4-1 for no override. At 20 mph the crush is 30 inches while at 80 mph the crush is 720 inches.

Resistance of the locomotive cab to penetration is shown in Figure 4-2 for a closing speed of 20 mph. The superstructure of the locomotive has little resistance to penetration even for the relatively low energy level of this case. Deflection has proceeded to over 80 feet without appreciably slowing the advance. The solution was stopped at this point. Comparison of the caboose force deflection curve to the curve for the overriden cab shows that the mismatch is on the order of 1,000 to one. Hence the deflection is almost entirely that of the cab.

These results correspond closely to observed damage in the accident history.

4.3 THREE DEGREES OF FREEDOM ANALYSIS

The objective of this study is to demonstrate the response of the caboose during initial phases of a collision between a locomotive and caboose. Variables treated include closing speed and height of the center of gravity above the line of action of the forces.

The simple three degree of freedom analysis was used to define the dynamic response of the caboose shown in Figure 4-3 to impact with a locomotive. The locomotive is represented by a horizontal spring to ground that acts through the underframe. This spring takes only compression. The caboose is treated as a rigid body mounted on two stage piecewise linear springs to the trucks. The secondary suspension is represented by the first stage and the bottoming-out represented by the second stage. When deflection upwards at either (or both) truck(s) exceed the uncompressed length of the truck spring, the truck is removed from the analysis.

Table 4–1. Collision Dynamics Methods and Parameters

WATFOR

CABOOSE-FREIGHT TRAIN IMPACT LOCOMOTIVE
CAR CRUSH AT IMPACT PLANE
OVERRIDE
NO OVERRIDE

RIGID BODY – 3 DEGREE OF FREEDOM

TRUCK SPRINGS
C.G. HEIGHT
TRUCK RETENTION
CABOOSE TO LOCOMOTIVE SPRING

KRASH

MISALIGNMENT COUPLERS
TRUCK RETENTION
CLIMBING – OVERRIDE
STRUCTURAL FAILURE SEQUENCES
VELOCITY
EFFECT OF MATERIAL NON-LINEARITY

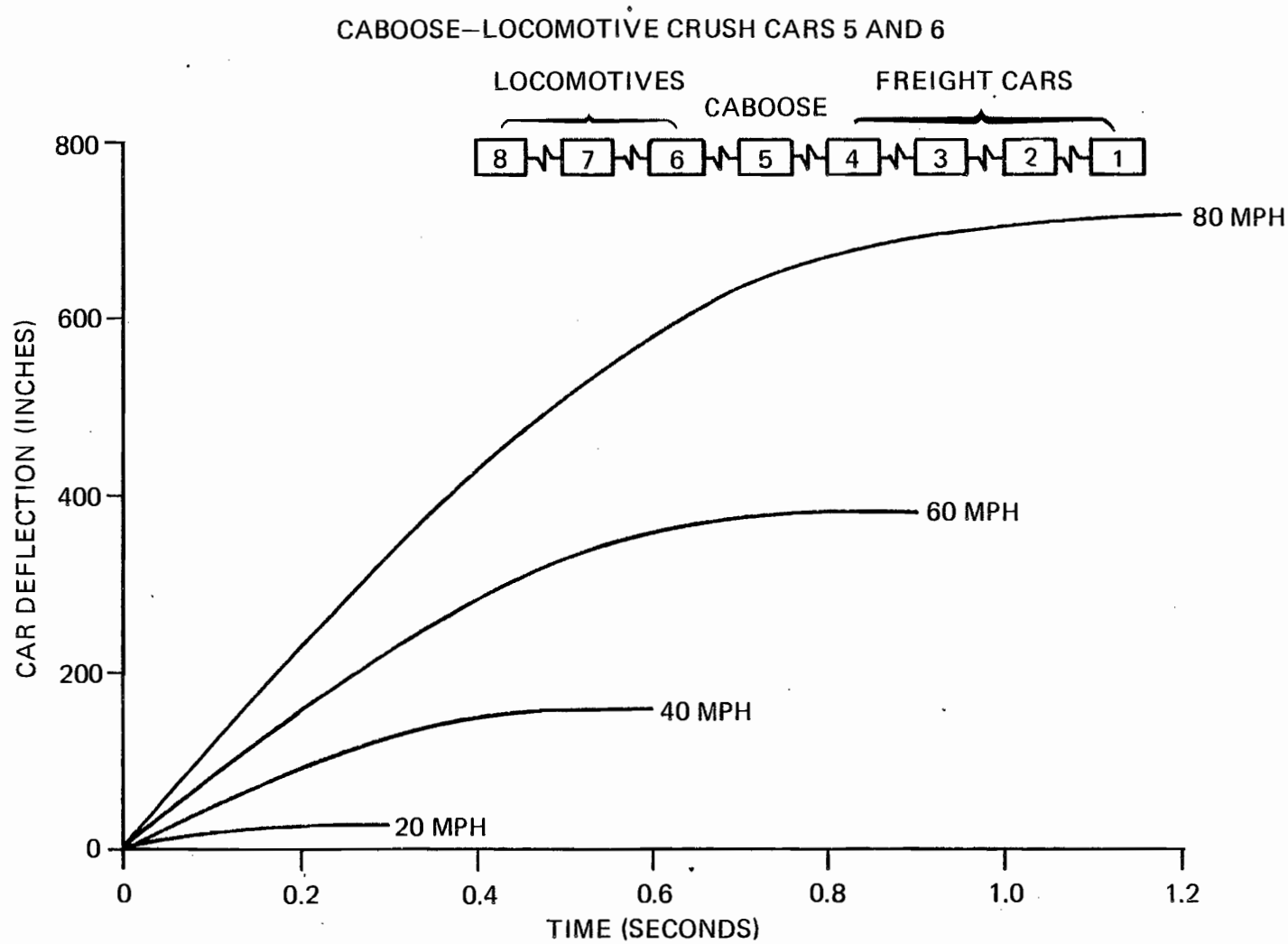

V_o OF LOCOMOTIVES 20, 40, 60 & 80 MPH; (FREIGHT CARS AND CABOOSE AT REST AT T = 0)

Figure 4–1. Caboose Locomotive Impact – Locomotive Overrides Caboose

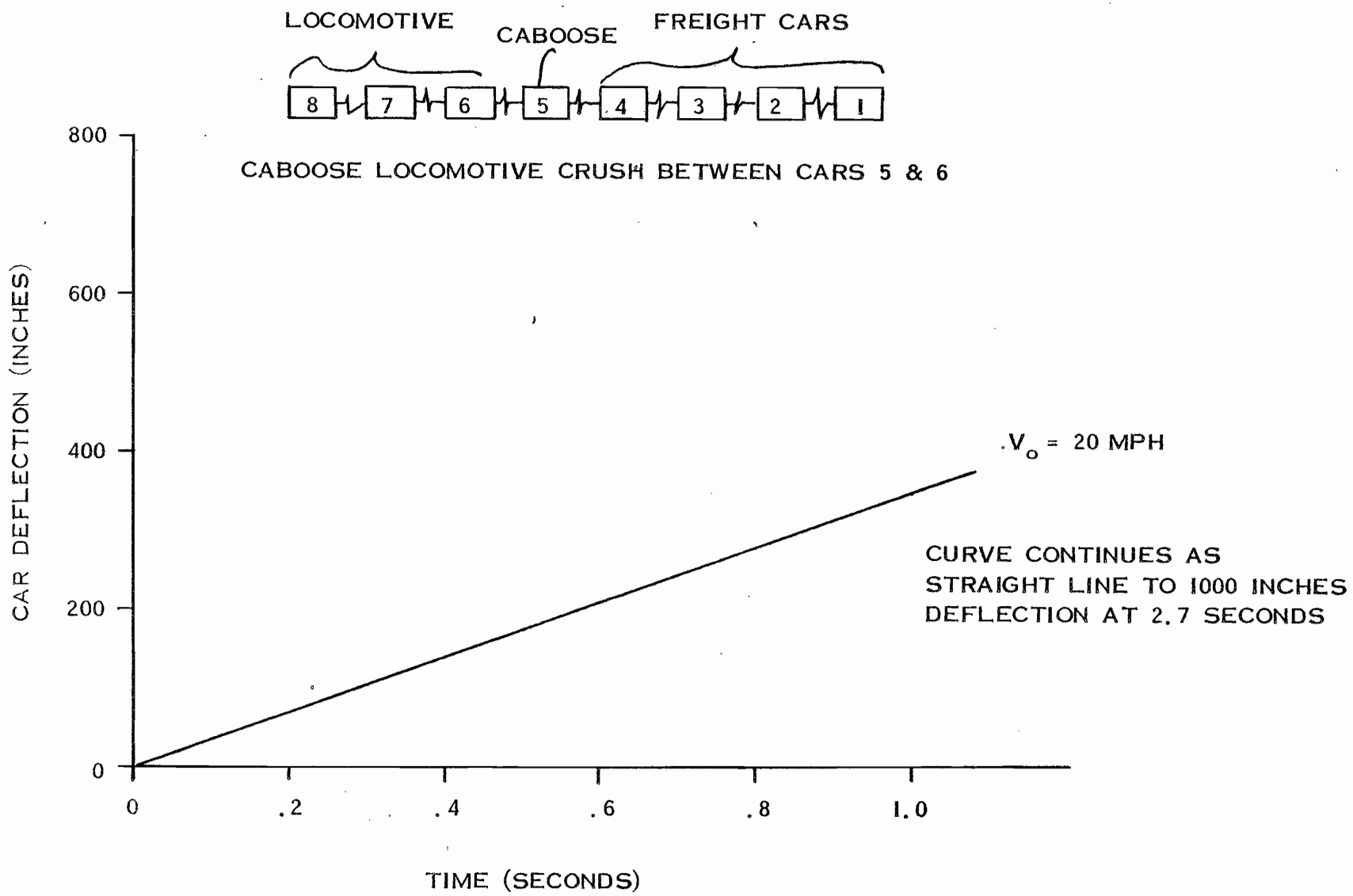

Figure 4–2. Caboose Locomotive Impact – Caboose Overrides Locomotive

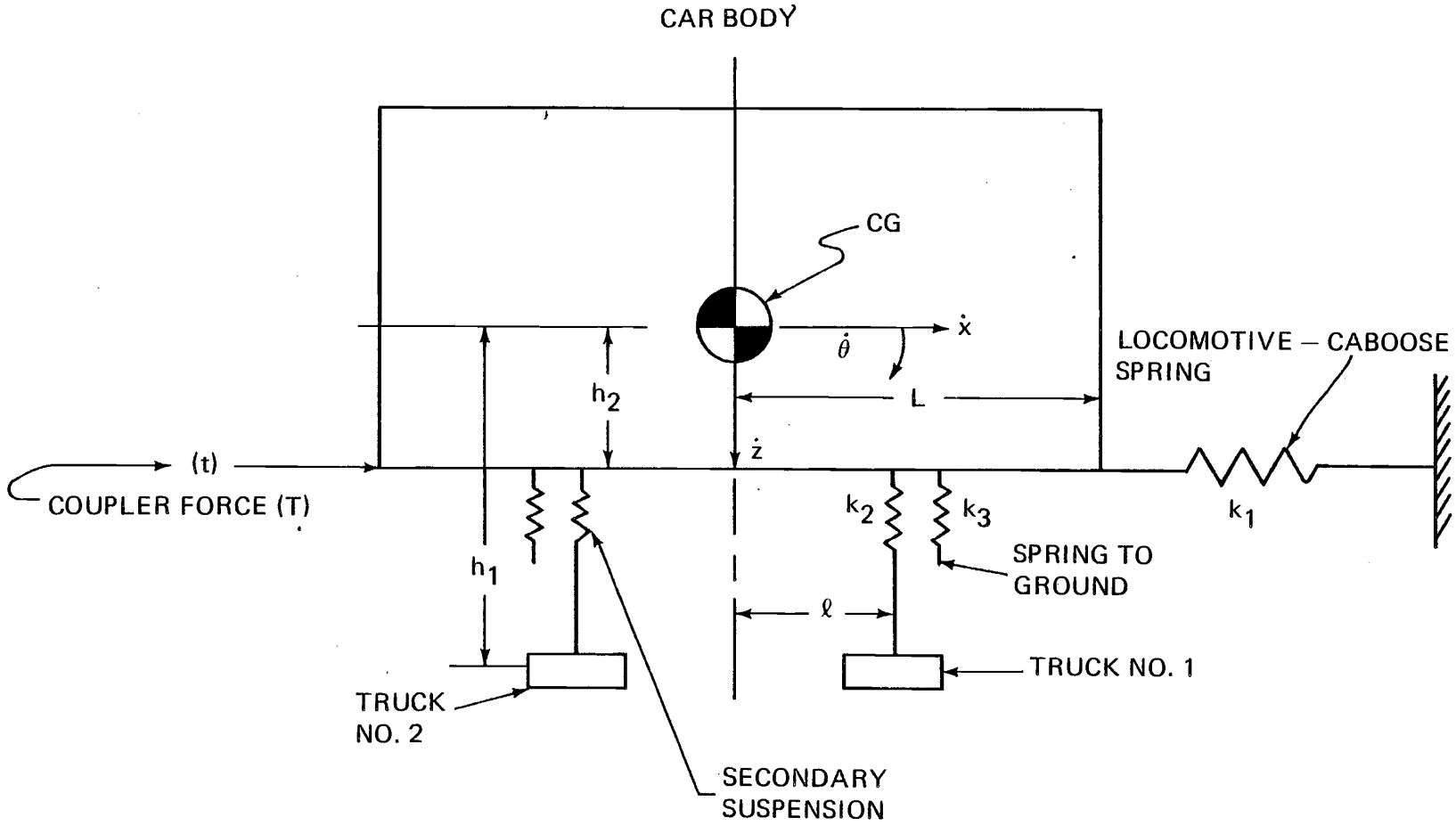

Figure 4–3. Caboose Rigid Body Dynamics Model – Three Degrees of Freedom

The reaction of the cars in front of the caboose may be represented by the force C(t). This force is entered in tabular form and may consist of up to 50 points.

To simulate truck retention, the computer program was modified to include the mass effects of the trucks. Since each truck is tested separately for detrucking, the mass terms may be modified on the basis of the test. The Z and θ terms, M(2,2), M(2,3), M(3,2), and M(3,3) are corrected to account for the mass effects of each truck. It is assumed that truck retention is such that the mass of the truck only becomes effective in the vertical and body pitch degrees of freedom when the secondary springs are uncompressed.

Carbody vertical and pitching velocities are corrected to account for the momentum conservation as the truck masses became effective. The solution is then continued.

It should be noted that the three degrees of freedom model is a simplified representation of the actual behavior of car dynamics. For instance, force limiting and geometric changes due to plastic deformation of the caboose and locomotive structural elements are not explicitly treated. Also vertical restraint of couplers due to friction is not treated.

This simplified treatment is valid only for the initial contact. That is, the advancing train travel during the contact dynamics limits the time for initial reaction as described by the equations. At 800 inches per second the advancing train will travel approximately 80 inches in 0.1 seconds. The available distance may be idealized as the sum of the draft gear compressions of the locomotive, the caboose, and the backup car to the caboose, plus the distance available after the caboose has decoupled from the backup car and locomotive. This distance is usually between 50 inches and 100 inches. Finally the complex behavior occurring after the initial reaction such as might arise from contact with the backup carbody or from subsequent misalignment of buff loads is not treated. These conditions tend to limit the range of validity of the results. However, the trends observed are instructive in showing conditions that could participate in the climbing phenomena and in suggesting variables for testing. Further test data is required over the speed range to validate concepts and analytical treatment.

Results

The basic behavior of the caboose is for the caboose body to pitch about its mass center as the draft gear spring is compressed until the number one truck (closest to the locomotive) secondary suspension bottoms and the couplers slide vertically to separate the caboose from the locomotive and the freight car. While the caboose body is rotating, the number two truck is separated from the carbody. When the number one truck bottoms, the caboose body receives a vertical impulse. In response to the vertical impulse the caboose body translates vertically separating from the number two truck and pitches at a constant angular velocity about its center of gravity. Concurrently, the carbody is accelerating horizontally away from the plane of impact.

On the basis of this analysis, initial collision dynamics were found to be affected by closing velocity, caboose body center of gravity, truck retention, effective spring between caboose and locomotive, and length of the secondary spring to bottom. While not examined specifically, effects of the distance between coupler faces on the dynamics may also be seen from the

equations. Table 4-2 summarizes the principle results obtained from the three degree of freedom analysis.

4.4 KRASH STUDIES

The locomotive-caboose collision was simulated using KRASH program to permit the representation of elastic plastic behavior of the structural elements of the vehicles while obtaining the gross motion of the vehicles. The extension in scope of the analysis using KRASH also increases the complexity of the problem which tends to restrict the versatility of the investigation.

4.4.1 KRASH Model

The KRASH locomotive caboose model is shown in Figure 4-4. The response is restricted to the vertical plane. The caboose structure is represented by the nodes 2 to 33 and the connecting elements. Symmetry conditions are applied to the nodes on the caboose centerline so that what is seen is one half of the caboose. The backup consist is represented by node 1 and the beam element 1-2. The forward coupler is given by the beam element 2-3, the draft sill by 3-4-5-6-7-8. Elements 2-26 and 8-10 simulate the collision posts. The remainder of the caboose body is given by the other nodes.

The truck masses are concentrated at nodes 27 and 28 with the center posts given by elements 4-28 and 7-27, and with the primary and secondary suspensions given by external springs. The external springs from masses 4 and 7 represent secondary suspension and transfers load directly to ground rather than through the truck. The axial properties of elements 4-28 and 7-27 are shaped to provide load only when the secondary spring bottoms or when the truck retention is active. In this manner the suspension and retention of the trucks is simulated for the caboose. The same approach is applied to the locomotive.

The locomotive underframe providing the principle structure is given by nodes 36 through 42 and the connecting beams. To place the center of gravity at the proper height, nodes 45 and 46 representing the engine and generator are used. The beams connecting these masses to the underframe approximate the contribution of the machinery to the stiffness of the underframe.

The plane of impact is located at node 33, the interface of the locomotive and caboose couplers. Node 1 through 33 are initially at rest and nodes 34 through 49 are advancing at the collision closing speed. The dynamic response of each node is computed throughout the impact.

It was intended to apply KRASH to study effects of a range of variables such as closing speed, back up spring stiffness, underframe stiffness, coupler misalignment, draft gear force-deflections, truck retention, caboose center of gravity, etc. It was found that the dynamic response of the model was sensitive to factors that altered the characteristic time constants of the constituent parts, and that parametric changes could be accomplished only with difficulty. It was necessary to limit the scope of application of KRASH. Valid results were obtained for some cases which proved to be instructive and are discussed below.

Table 4–2. Three Degrees of Freedom Rigid Body Principal Results

1. VERTICAL VELOCITY INCREASES WITH

   - CLOSING SPEED
   - CG HEIGHT
   - SECONDARY SPRING LENGTH
   - DETRUCKING

2. TIME TO CLEAR TRUCKS VARIES INVERSELY AS

   - CG HEIGHT
   - CLOSING SPEED
   - LOCO CABOOSE SPRING
   - TRUCK RETENTION

3. DECOUPLING MAY OCCUR EVEN AT LOW SPEEDS

   ∴ TO REDUCE CLIMB TENDENCY

   REDUCE: CG HEIGHT
   LOCO–CABOOSE SPRING
   SECONDARY SPRING LENGTH

   ADD: TRUCK RETENTION
   COUPLER INTERLOCK
   LOCOMOTIVE ANTICLIMBER.

COUPLERS — NODES 1–2
32–33
33–34
44–49

DRAFT GEAR — NODES 2–3
8–32
34–35
43–44

DRAFT GEAR POCKET — NODES 35–36
42–43

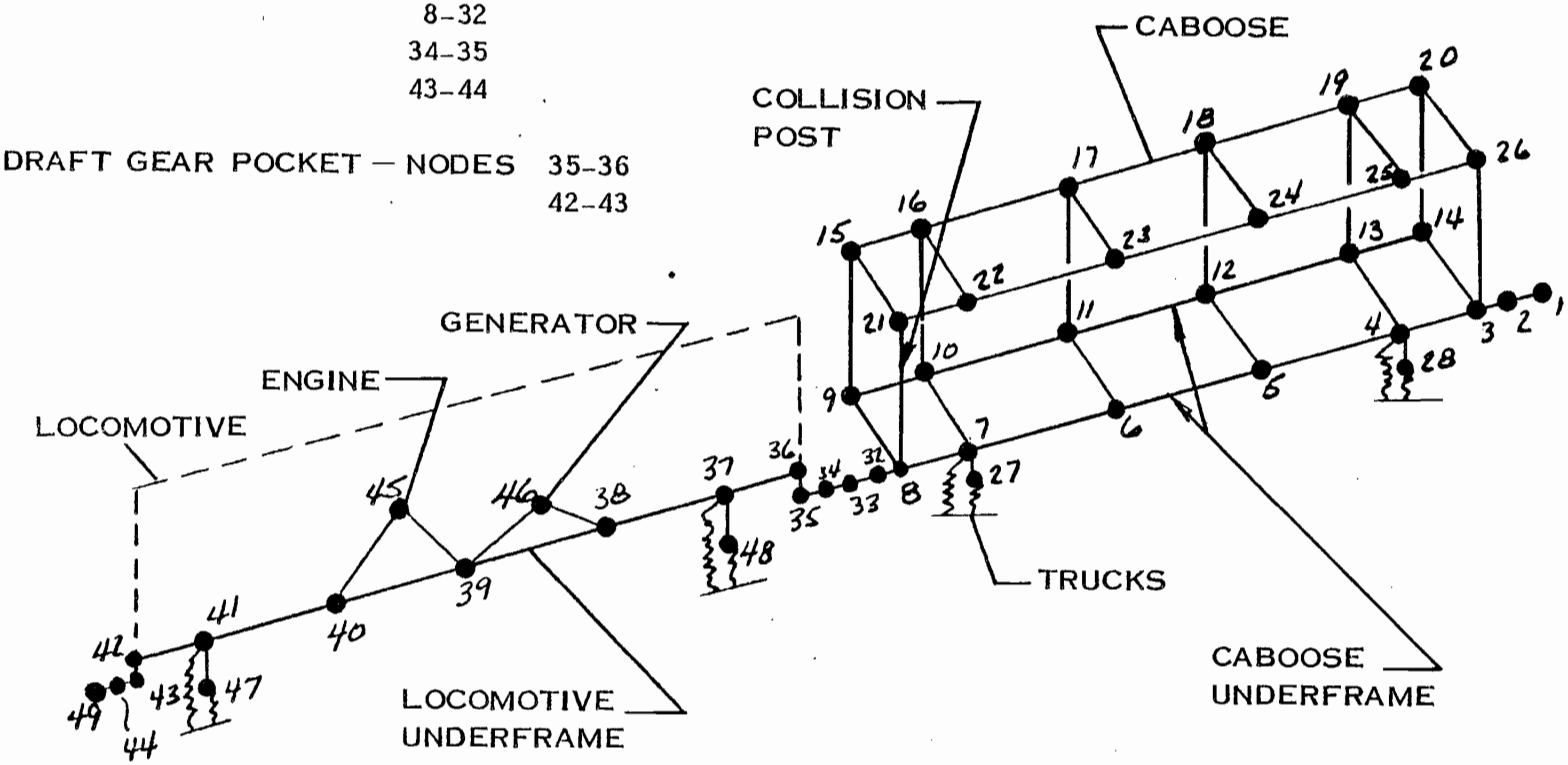

Figure 4–4. Caboose-Locomotive KRASH Model

4.4.2 KRASH Results

The nominal collision between the GP-40 locomotive and CA-10 caboose in which the E type couplers and back up springs are aligned was analyzed for a closing velocity of 17 mph (300 inches per second). The principal results are shown in Table 4-3.

The response of the caboose underframe is shown in Figure 4-5. Keeping in mind the distortion of the scales, it can be seen that the caboose underframe rotates without bottoming the aft secondary suspension, and then translates vertically while continuing to rotate. The coupler between the caboose and locomotive is seen to deform downward as the forward coupler also deflects downward.

The non-linear properties of the coupler limit the load. The aft coupler fails as a beam column as shown by the load reversal. The results after this time should be disregarded.

The locomotive underframe did not experience the same order of rotational displacements and for practical purposes did not rotate. Some small bending of the underframe was experienced but was in the elastic range. The major damage to the locomotive structure was confined to the draft gear pocket and coupler.

The dynamic response of the caboose compares generally with that observed for the gondola in the SOAC accident (Reference 4). In particular the coupler failure mode and the elevation of the carbody seem to follow the same pattern. Comparison with the motion pictures of the DOT/TSC 840 tests (Reference 6) shows similarities. The rise and rotation of the carbody and the characteristic times are of the same type.

Other cases were attempted to study the effects of other parameters on the response. Similar behaviour to the basic case was observed. However, the idealization of the structures was more complex, perhaps than needed, and the effort became involved with adjusting the models for stability and physical fidelity. Further studies using this type of approach should be done in stages. Starting with models slightly more complex than the rigid three degree of freedom system discussed earlier, the effects of the range of parameters should be examined and understood. Then the models could be made more representative (complex).

The overclimb mechanism from this study is seen to involve both the mass coupling and the misalignment of the buff forces. The secondary suspension does not appear to play a significant role in the overclimb. This is a departure from the rigid body three degree of freedom results.

4.5 SUMMARY

The collision dynamics analysis has indicated possible mechanisms for override. These appear to involve the vertical component of the collision buff load resulting from caboose body rotation and translation due to mass coupling, and from structural deformation.

From the three degrees of freedom analysis it was seen the initial response could be completed before contract between the locomotive end-plate and the caboose body. The following retard the initial response:

Table 4–3. KRASH Program Results

COUPLERS FAIL FIRST

CABOOSE UNDERFRAME STARTED TO RISE AWAY FROM IMPACT

NO EFFECT ON LOCOMOTIVE UNDERFRAME

LOCOMOTIVE DRAFT GEAR HIGH LOADS – FAILURES

CABOOSE UNDERFRAME BUCKLED

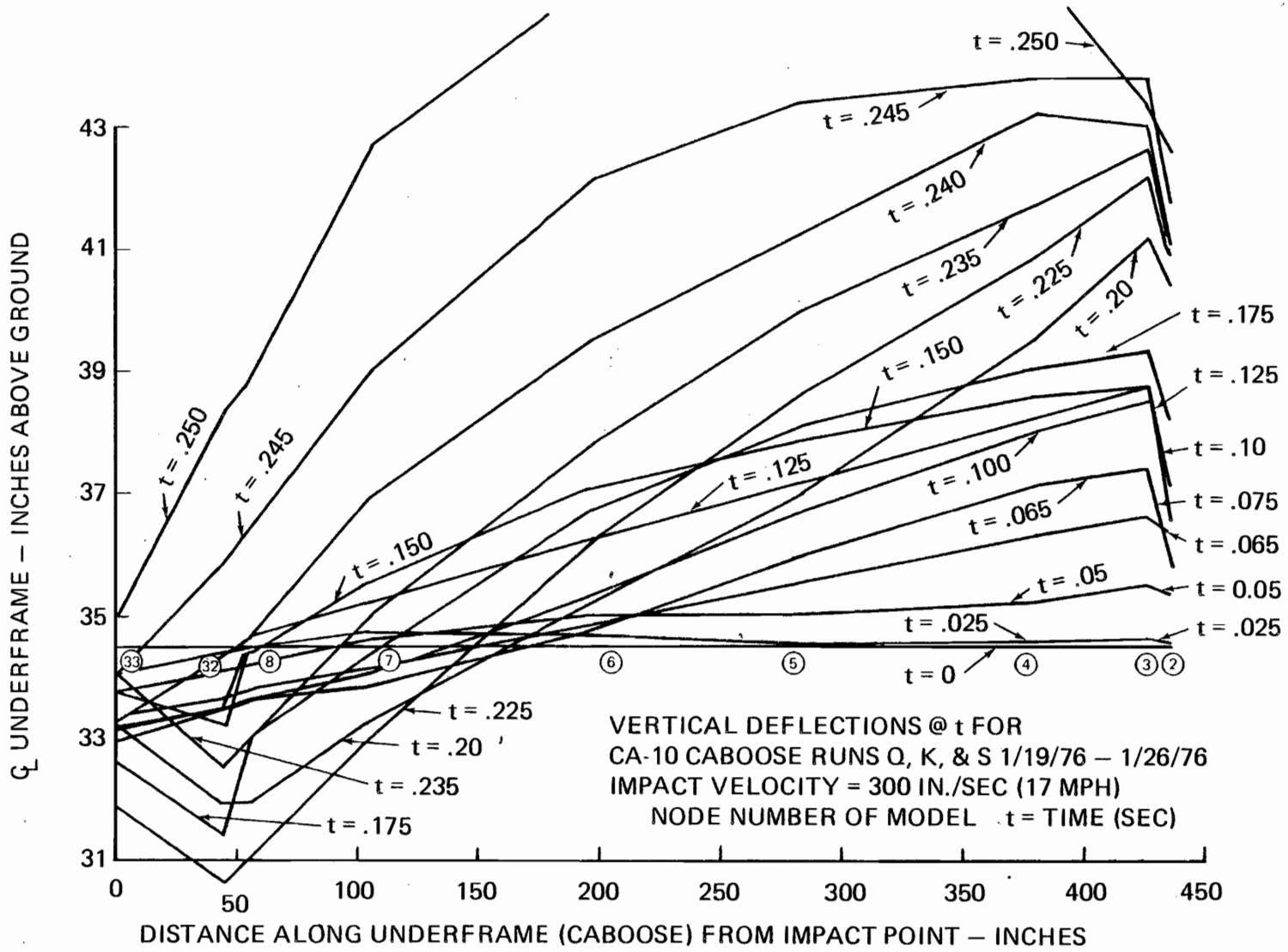

Figure 4–5. Caboose Underframe – Vertical Deflection

- truck retention
- lowering caboose body center of gravity
- soft draft gear
- reduction in secondary suspension length (static to bottom)
- reduced collision velocity.

Sufficient motion occurred in the initial response for the vertical disengagement of the couplers between the caboose and locomotive and between the caboose and the next vehicle forward. Also in the absence of truck retention, the caboose body could leave the truck center pin. At the completion of the initial response, the caboose body had upward vertical velocity, and in subsequent contact with the next forward car would have eccentrically supplied buff loads that would contribute to additional upward motion. This upward mobility may be restrained by preventing decoupling, and by the presence of an overhanging anti-climber.

The presence of structural deformation of the draft gear/coupler system and of the caboose underframe did not materially affect the caboose body response. It did show the need for stronger couplers in resisting bending and axial loadings and for stronger coupler carriers.

5. TEST PROGRAM

A test program is needed to provide the technology base for improved crashworthy designs and to develop proof of design acceptance tests for procurement purposes. Such a program would include both static and dynamic testing of rail vehicle components and of complete vehicles. To date collision data has been obtained almost entirely from actual accidents.

Controlled test conditions are necessary to generate the engineering data for the crashworthy design. Design requirements have resulted from the extrapolation of non-destructive testing and from simple calculations that are unsubstantiated by test results.

Static testing to structural failure of anticlimbers, shelf lock couplers, collision posts, underframes, and truck retention devices will provide a baseline for evaluation of the member and weld performance. Such tests will reveal the failure mode and capability of the constituent elements.

Dynamic testing of sections of vehicles and of complete vehicles will provide data in which the interaction of structural strength and inertial loads is better represented. Such data will be useful in understanding the manner in which energy is absorbed establishing dynamic loads, and for comparison with analytical results.

Impact tests (IZOD) should also be conducted on steels and on weldments. These test results are useful in evaluating materials and welding processes. Such tests should include the effects of temperature for the operating conditions of the vehicles.

In addition, collision tests between vehicles should be conducted to provide data on the mechanisms of collision dynamics and to establish design loads. Scale model testing should be usable as a viable development technique. These tests should be directed towards developing answers to specific technical questions and should be supported by a good analytical simulation.

As specific crashworthiness concepts are developed, these concepts should be validated through dynamic tests. Such items as improved anticlimb systems and deflection shield systems should be tested in this manner.

As the test data base and testing technology is developed, crashworthiness acceptance tests should be developed. These tests are needed to assure proof of design and should become an integral part of the vehicle specifications.

In the interim Scientific reports more detailed test plans have been presented. These tests provide a base for the start of a test program for crashworthiness development.

6. CRASHWORTHY DESIGN DEVELOPMENT

6.1 INTRODUCTION

The design represents a preliminary effort to provide crashworthiness for the locomotive cab. The design has been developed for the purpose of concept validation. At this time there is no experimental data available on the performance of the new structure under crash conditions. Further, the analytical tools involving non-linear structural analysis are new and are still being developed. The design will provide a base from which a production design may be evolved.

The deflection system is constrained by weight and cost. Weight affects the tractive effort and axle loading of the locomotive. For tractive effort the weight should be equally distributed between the trucks. Axle loading relates to track damage, with 70,000 lbs. per axle representing an upper limit for U.S. track. Since the system does not contribute to the productivity of the locomotive the cost should be minimized. For concept demonstration purposes the design has been sized conservatively to perform in the crash environment. For production the design should be engineered to include test data from validation tests and to keep cost to a minimum.

6.2 COLLISION DYNAMICS

Override occurs throughout the range of closing velocities. The mechanics of overriding are complex, involving mass coupling between longitudinal and rotational degrees of freedom, mass and coupler characteristics, suspension properties, and vehicle geometries. With the majority of current operational designs this results in the survivable volume of the locomotive cab being demolished while the primary structure is relatively undamaged.

The minimum conditions for providing protection to the cab are summarized in Table 6-1. The range for the closing velocity is obtained from the accident data history. The temperature range represents the limits for continental United States with some provisions for solar radiation. Temperature is important in its effect on the impact properties of materials. The properties presented represent most of the vehicles in interchange service.

TABLE 6–1. DESIGN CONDITIONS

Closing Velocity	0–70 MPH
Temperature	–70 to +185°F
Impacting Vehicle	
Caboose Body	20 to 40 KIP
Length	24 to 40 Ft.
Box Car	40 to 186 KIP
Length	40 to 50 Ft.
Locomotive Body	178 KIP
Length	60 Ft.

The most significant parameter for a given collision is the closing speed. Tests have shown that this velocity remains essentially constant during the initial stages of the collision where the override occurs. Figure 6-1 shows the cumulative percentage of fatalities versus closing speed. For rear end collisions involving cabooses and freight cars being struck by locomotives, protection is required for 70 mph. Head end collisions involving locomotives striking locomotives protection is required for speeds in excess of 80 MPH. Head end collisions are extremely severe due to the secondary impacts of the overriding locomotive on the cab structure. Therefore, it was decided for concept validation to provide for the rear end collision over the full range of closing velocities. The inherent capability of that structure will provide some reduced protection for the head end case.

Using the concept of an inclined deflection shield to divert the overriding vehicles, the collision dynamics of the system and the basic strength and stiffness requirements of the system were obtained. A simple simulation, shown in Figure 6-2, was used for this purpose.

From this study three different responses were observed. The overriding vehicle may bounce up the shield and slide over the cab roof (T_1); or it may rotate upward making a second contact on the cab roof corner (T_2) and slide over the cab; or it may rotate upwards and make a second contact involving the pivot end and the base of the shield (T_3) from which it translates upward and pitches down striking the cab on the roof (T_4). These responses clearly indicate that the deflection system must protect against these secondary impacts.

To study the contact forces between the overriding vehicle and the shield, the inclination of the shild was varied from 30° to 60° to determine the affect of incidence. As expected the lower incidences gave the lower loads. While the 30° incidence was desirable for loads it extended the length of the locomotive and restricted the downwards vision of the engineer. An incidence of 37.5^o was found to be acceptable for both loads and operational conditions. The loads to deflect the locomotive were 1×10^6 lbs.

The deflection shield must withstand the critical impact of the overriding vehicle. In performing this function it must resist puncture but may deform. To account for this, two conditions were defined. The first condition treats a concentrated load such as might be imposed by draft gear on the center sill of the overriding vehicle. It was assumed that after a certain level of load, these elements would be flattened and the load on the shield would more closely resemble a uniformly distributed load. For design purposes these loads were taken as 400,000 lbs. and 1,600,000 lbs. respectively.

The deflection shield back-up structure and the underframe must be able to support these loads without excessive deformation. A downward deflection at the anticlimber of 20 inches was taken as acceptable. For the case of a locomotive overriding a locomotive the deflection of the underframe could be limited to 20 inches by increasing the underframe stiffness in the vicinity of the forward bolster.

A further conclusion from these preliminary studies was that the deflection system must protect not only for the initial impact but for the secondary impacts on the cab roof corner and on the roof. In addition the locomotive underframe structure (the principle structural element) must sustain the deflection loads without excessive deformation.

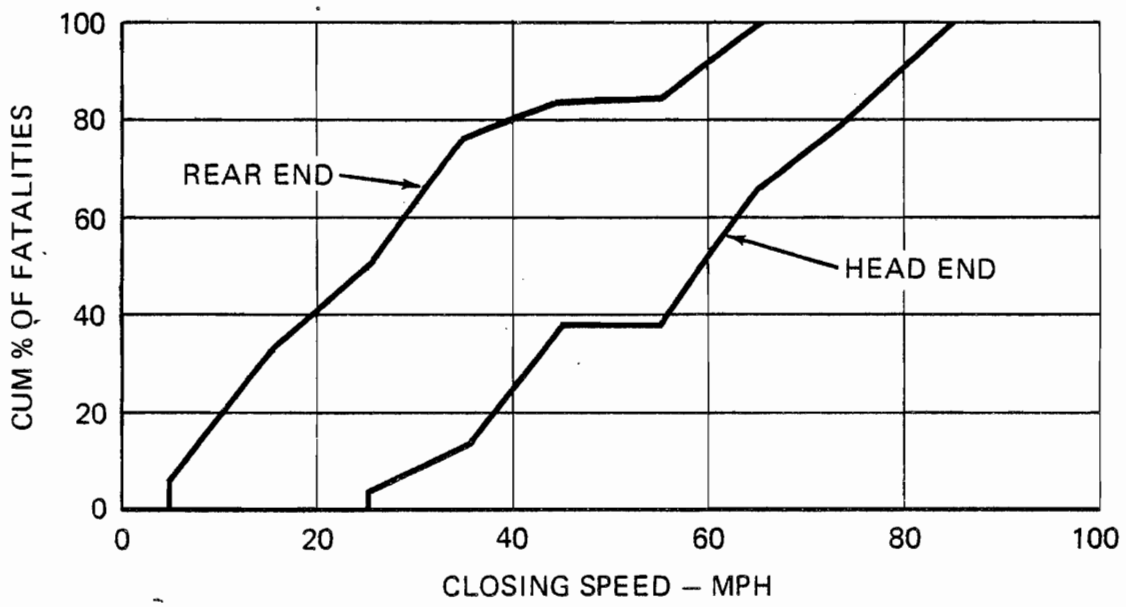

Figure 6–1. Collision Fatality Distribution Versus Closing Speed

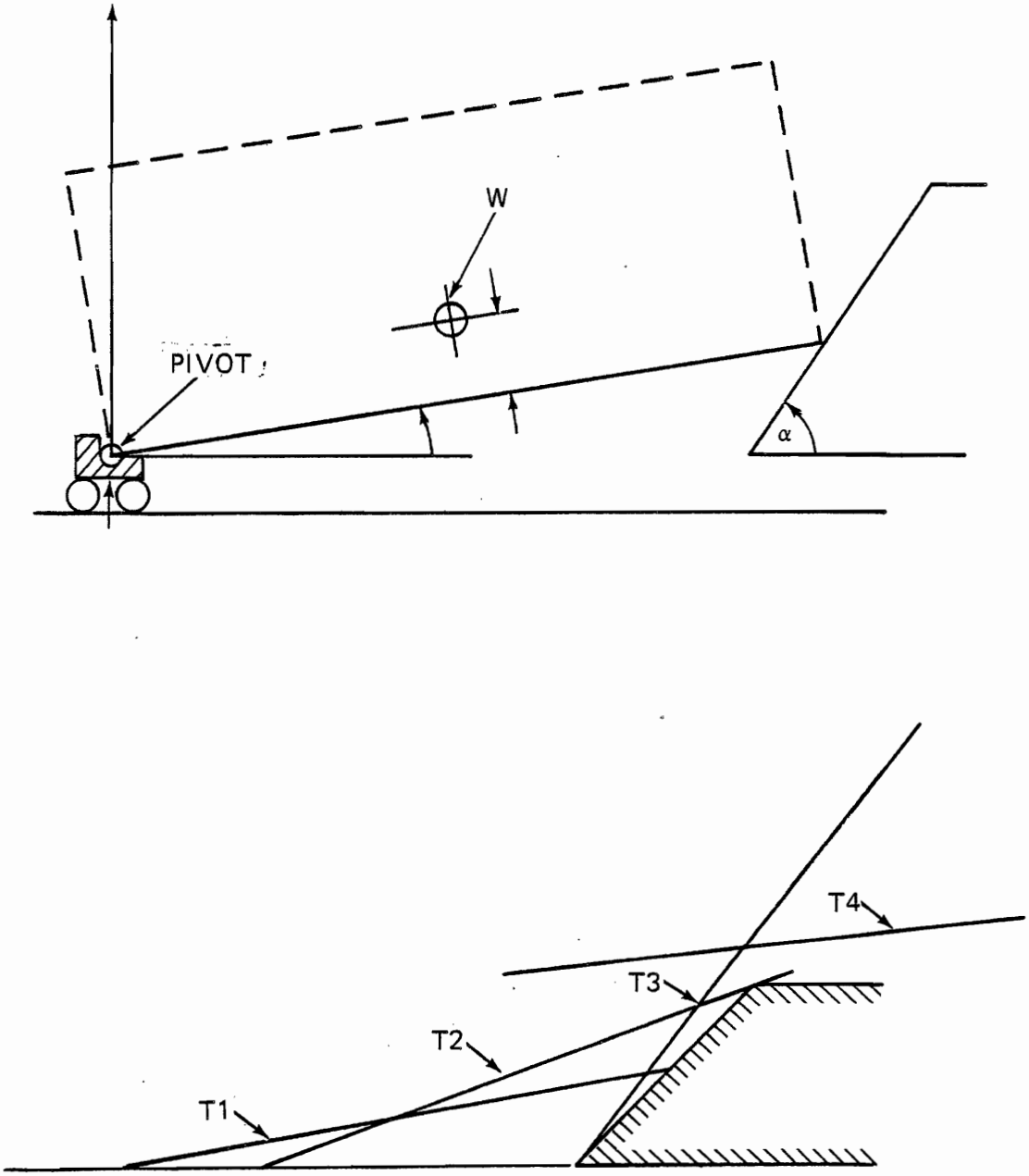

Figure 6–2. Single Degree of Freedom System

6.3 CONFIGURATION

The following constraints were used for configuration selection. The maximum cross-section must be within Plate "C" of the AAR clearance envelope. Cab internal volume and dimensions should coincide with the FRA/TSC sponsored Boeing Vertol Cab Design. The operational, visibility, and access requirements of that cab must be met. The overall length of the locomotive must be maintained as closely as possible.

Consideration was given to various arrangements of the deflection shield providing either lateral or vertical deflection. Layouts were made and operation constraints on visibility were assessed. From these studies it was concluded that the vertical deflection provided the best approach.

In order to keep the cab superstructure within reason, the concept of a crew crash station was evolved. In the secondary impact the structure above the shield is subject to large deformations. Consequently in the advent of a collision the crew should get down on the floor and protect their heads. The volume behind the shield (See Figure 6-3) is then the volume to be defended.

6.4 STRUCTURAL DESIGN

The design of the deflection shield involves problems in materials and in resisting both concentrated and distributed loads in the plastic range. The shield material should have high yield and tensile strength, good elongation, good weldability, and high impact resistance down to $-70^{\circ}F$. A number of steels were investigated and 8620 quenched at $1650^{\circ}F$ and tempered at $1200^{\circ}F$ was found to have these characteristics.

The required plate thickness was obtained from empirical equations giving the load to collapse the plate under large deflection conditions for both concentrated and distributed loads. These equations are accurate to ±30%. A plate thickness of 1.7 inches is required.

Shields of waffle iron and built up construction were investigated. These configurations offer a potential weight reduction by a factor of 2.5. However, there are problems of fabrication, and local stability that require development programs. Also there are trades between cost and weight. For concept validation the solid plate was selected.

As a check on the conservatism, a limit theory approach was applied to the solid plate. For the concentrated load and a 1.6 inch deflection under load the shield has a safety factor of greater than 3.

The adequacy of the underframe to withstand the loads due to the impact on the deflection shield was investigated using a plane-frame elastically perfectly plastic lumped mass analysis.

Using a downward deflection of 20 inches as a criterion for acceptable deflection it was observed that the existing underframe would withstand caboose impact to a closing velocity

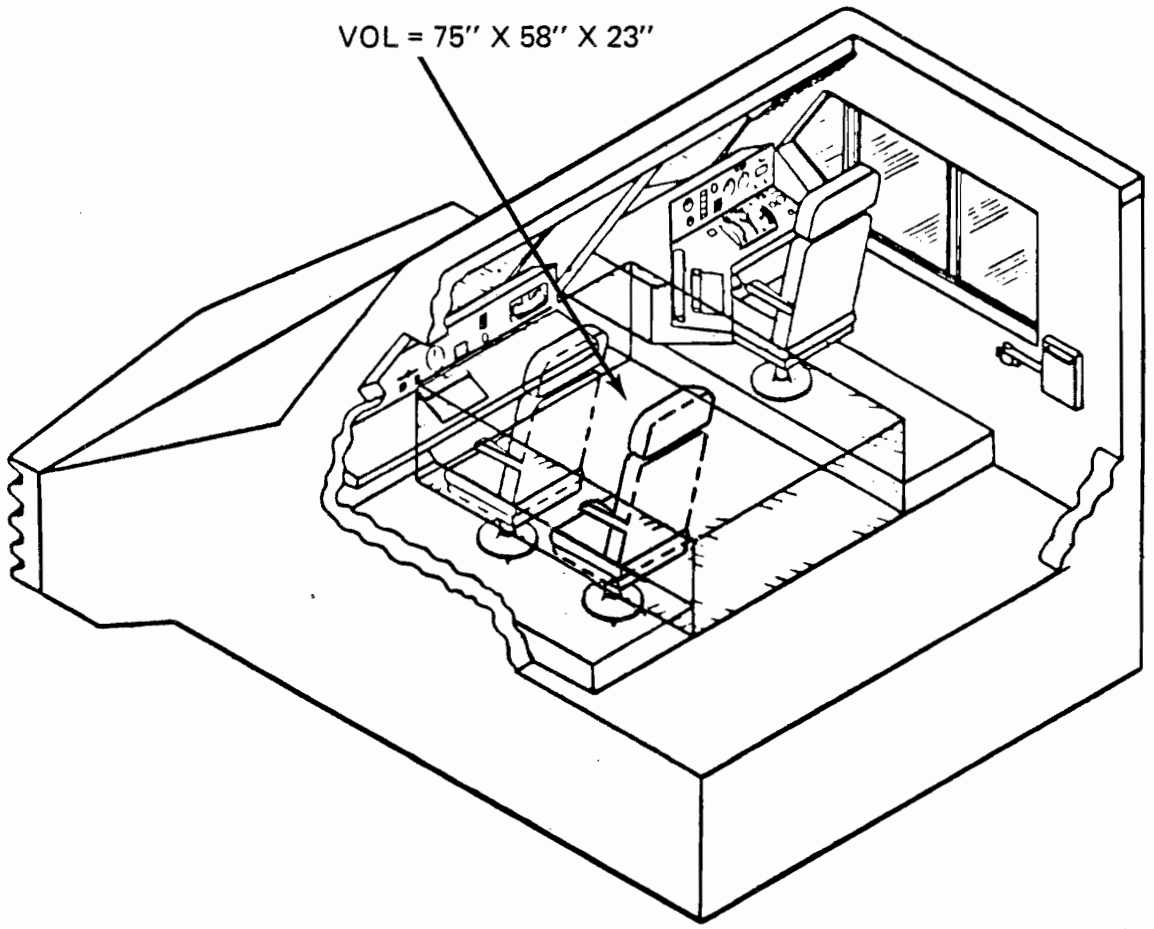

Figure 6–3. Crash Station

greater than 70 MPH. For locomotive override the basic underframe was inadequate for most of the range of closing velocities.

Most of the curvature in the underframe was obtained in the vicinity of the forward truck. Increasing the section stiffness in this region by a factor of 1.8 provides for locomotive deflection up to 70 MPH.

The structural framework must protect the crew against the previously defined secondary impacts. The framework is shown in Figure 6-4. The design problem is to provide an energy absorbing structure that prevents penetration of the survivable volume. Analytical tools are needed that treat the structural properties in the plastic regime, the inertial loadings of the member, and account for large changes in geometry. The USAAMRDL KRASH computer program was used to model this structure. The features of this model are shown in Table 6-2.

TABLE 6–2. MODEL FEATURES AND LIMITATIONS

Features

- Locomotive Structure with stiffened underframe.
- 3-dimensional framework.
- Elastic-plastic beam elements (37 beams).
- Symmetric about longitudinal centerline.
- Representative mass distribution (21 Masses).

Limitations

- Rigid impacting vehicle.
- Relative motion between impacting vehicle and locomotive cab not simulated.

Assumptions

- Plastic hinges formed at masses.
- No local instabilities.
- No element rupture.

During the initial phase of the impact the structural elements were loaded primarily axially and in bending in one plane. As the impact progressed the loading changed to load the elements additionally in torsion and bending in a second plane. It became obvious that the I-beams should be replaced with thick rectangular structural tubes. These sections are better able to resist the combined loading of the latter phases. The thick sections preclude local instabilities of the crippling type and have some advantage in fabrication.

Having "tuned" the model, the full simulation of the caboose impact was then studied. The updated model was found to successfully protect the crew to 70 MPH closing speed. The forward roof elements and the frontal post bear the brunt of the impact. Most of the elements of the framework have exceeded yield but have not ruptured. In order to achieve this, all joints must be able to develop the ultimate strength of the members.

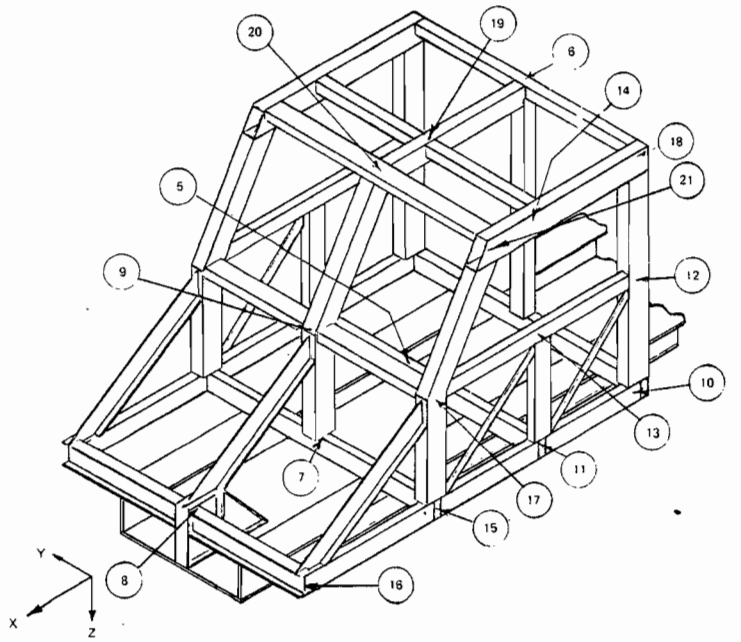

Figure 6–4. Cab Frame KRASH Model

A significant result that is indicated in Figure 6-5 is the large strain energy in the underframe between the trucks. This indicates a bending "hinge" is forming in that area. The mode of deformation is a new failure mechanism for the underframe that has not been observed in almost all of the previous locomotive accidents.

The upward rotation of the cab is due to the moment provided by the vertical offset of the impact point and the forces to decelerate the impacting vehicle. This rotation increases the tendency of the impacting vehicle to slide over the cab roof. As previously mentioned this behavior is not treated in this simulation but such action would relieve the loading of the roof corner. Should the bending of the underframe be carried to completion some hazard to the crew may be present due to intrusion of aft mounted locomotive equipment.

Similar results were obtained for the case of a locomotive override. But here, the bending of the underframe was more pronounced. Using a criterion of 40 inches upwards movement of the front of the underframe as an acceptable limit, the design provides protection only up to 30 mph. The protection could be increased by stiffening the underframe. However, pending verification of the deflection process and the acquisition of test data for correlation with the analytical results, further effort to extend protection for the locomotive override was deferred.

A potential design for a crashworthy locomotive is shown in Figure 6-6. The deflection shield is 60 inches wide, inclined 37.5 degrees to the horizontal, and supported by an underframe stiffened in the vicinity of the forward bolster. The heavy tubular steel framework prevents intrusion of the overriding vehicle into the crew crash station (survivable volume). The framework is sized to permit a modular cab to be installed. The joints in the structure are designed to plastic welding practices and use haunches and gussets.

6.5 CONCLUSIONS AND RECOMMENDATIONS

The application of KRASH to the design of the protective framework of the locomotive cab has produced a feasible structure for concept verification. This approach provides an insight into the complex behavior of the structure during the secondary impact in the deflection process. The analysis allows for rational treatment of the loads and deformations of the structure.

A conservative approach has been used to obtain a design suitable for concept validation. Further, the design may serve as a basis for further improvement. The complete deflection system appears obtainable for a 5% increase in locomotive weight with the frame work contributing approximately 3% of that increase.

The study has indicated that the primary collapse mode of the structure may be driven from the cab area into the middle section of the underframe. This could lead to structural concepts that integrate the crashworthy cab framework into the vehicle and make more efficient use of the total structural material.

Crashworthiness of the structure may be increased by the use of better steels. Common mill practice is to produce steel to specified yield and tensile stresses and impact (charpy) ratings at a given temperature. The impact resistance of structural steels decrease rapidly as the test temperature is decreased. The impact resistance at low temperatures may be increased sub-

CABOOSE OVERRIDE
TIME = 0.129 SEC
Vo = 800 IN./SEC
16% KE REMAINING

19.7 BETWEEN BOLSTERS

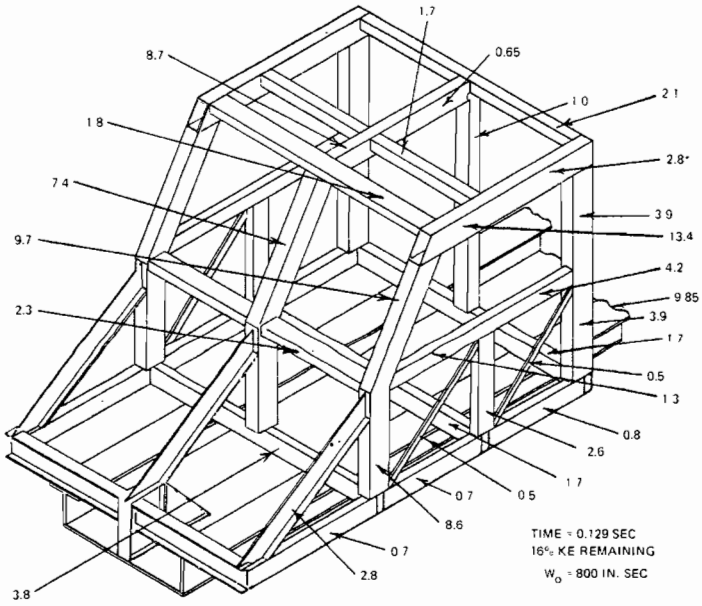

Figure 6–5. Strain Energy Distribution (%)

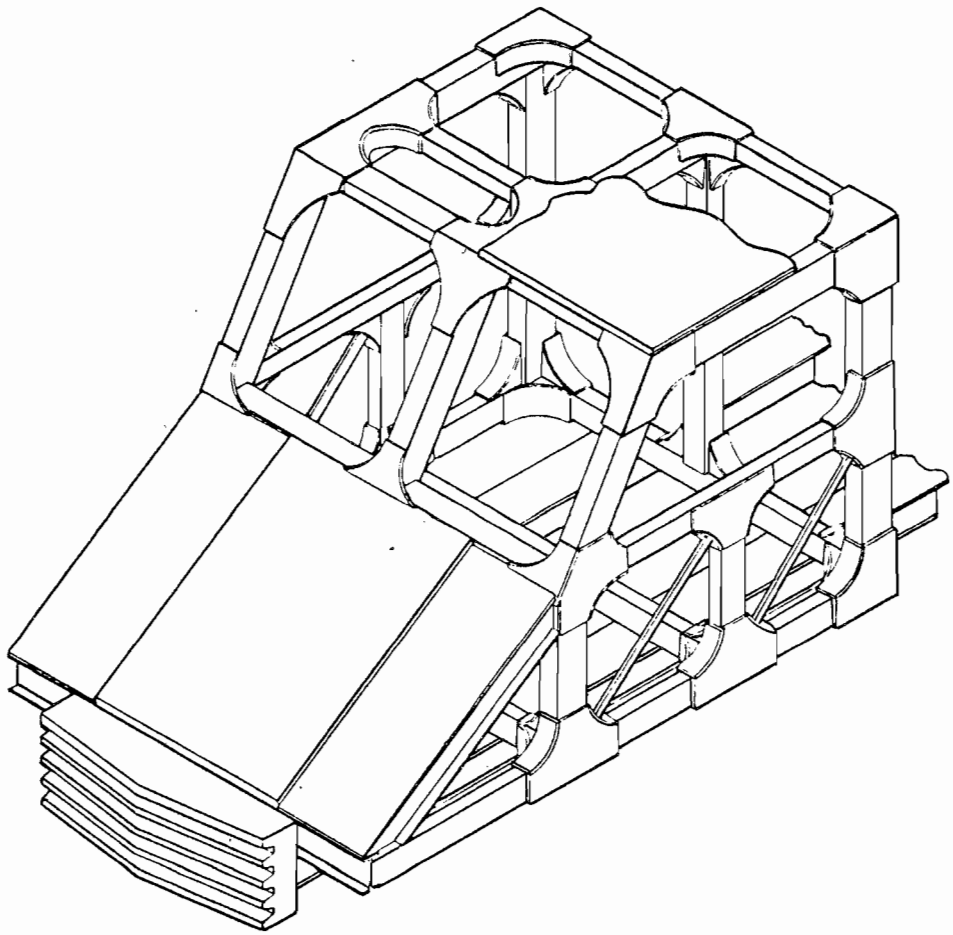

Figure 6–6. Final Design

stantially by normalizing. In addition, the use of higher yield and tensile weldable steels will provide the same protection at a lighter weight.

The impact resistance of welds is sensitive to the details of the welding process. Welding processes that give good impact resistance are needed. Further, the welds should be designed to plastic practices. Weld design to static loads based on yield is not sufficient.

It appears timely for the development of industry standards for crashworthy steels, weld design, and weld processes. Such standards would serve for specification and for proof of design. Also they would form the basis for future improvement in crashworthy technology.

7. CONCLUSIONS AND RECOMMENDATIONS

7.1 CONCLUSIONS

The objectives of the program have been met. A comprehensive train-train accident data review has identified the source of casualties, identified the collision dynamics, and identified the role of structure. Detailed engineering analyses of three representative classes of rail vehicles have been conducted. Candidate improvements to these vehicles have been identified.

Structural improvement appears to be the most cost beneficial approach to achieving improved crashworthiness. Operational procedures were reviewed and generally found to be adequate. Some improvements in the accident reporting could be made by providing data on structural damage suitable for engineering analysis purposes.

It was found that the specifications for rail vehicles are primarily directed to operational and structural strength performance. Crashworthiness is treated only as regards collision posts and truck retention for passenger vehicles and truck retention for locomotives. These elements are inadequate to provide the desired protection.

Construction standards for passenger cars, locomotives and cabooses have been evolved by the FRA, by the American Association of Railroads, and by the manufacturers. For vehicles in interchange service such as passenger cars and locomotives this has provided some standardization. For cabooses the leading manufacturer has provided sturdy crashworthy vehicles. However, since cabooses are not in interchange service, a variety of vehicles of varying design and construction are in service.

No industry standards exist for such important aspects of crashworthiness as design processes, welding processes, impact resistant steels and minimum structural features. These items are currently directed to provide specified structural strength with crashworthiness properties being left to that inherent in the design.

Current engineering and acceptance testing of prototype vehicles is limited to non-destructive testing. Such procedures do not provide data on modes of failure either of major structural elements that have important functions in crashworthiness or of the integrated structural shell.

Some progress has been made in the development of the technology to analyze and demonstrate crashworthiness. However, in the area of collision dynamics, particularly with respect to overclimbing, further development is needed. Non-linear structural analysis technology is still being developed and further effort in the application of these methods to rail vehicles is needed before the techniques can be used as standard design tools.

For override prevention improved self-centering couplers having a shelf lock feature and impact locking should be provided for the three classes of vehicles. Increased strength anti-climbers should be provided on all passenger cars and locomotives. Truck retention on cabooses would also reduce the tendency to climb.

As a defense against override for passenger cars, increased strength collision posts with roof and underframe attachments that develop the ultimate strength of those members are needed. Where the internal arrangement permits, such as vestibules, a second set of collision posts

could be provided. All welds of primary structure from the anticlimber to the bolsters should develop the ultimate strength of the structure. Increased strength truck retention will provide a second line of defense by transferring loads to the underframe.

For the locomotive, the deflection shield system with the crew crash station appears to offer the best protection. The deflection system provides protection against both penetration of the cab volume during initial impact and during secondary impacts from the overriding vehicle. The deflection shield concept has been shown to be feasible and to be ready for concept validation.

Commercially available cabooses already have a high level of structural crashworthiness. Some improvement might be made through improved collision post attachment. Older cabooses and those of doubtful linage should be brought up to the crashworthiness of the current designs.

7.2 RECOMMENDATIONS

1. Technology for the analysis of collision dynamics and for the behavior of structure under crash conditions should be further developed and applied to the crashworthy evaluation of designs. Analytical tools are needed for the improvement of structural components and existing designs. For new configuration the analytical tools will permit the assessment of the structure in the design phase, and may be used as a partial substantiation of the design. This technology should be validated by correlation with test data.

2. Crashworthy components such as couplers, anticlimbers, collision posts, and truck retention should be developed. This effort involves the design and testing of the components to establish functional and load limits. The crashworthy designs may then be recommended for incorporation into service.

3. A test program consisting of both static and dynamic tests to uncover the failure modes of classes of vehicles should be conducted. As the crashworthiness of the vehicle is improved, care should be exercised not to force failures into occupied areas. Major changes in failure mode should be understood and may require correction. As part of this program meaningful tests should be identified for prototype acceptance testing.

4. Specifications and standards for crash resistant welds for structural elements involved in crashworthiness should be established. Welding technology used in the plastic design of structures could serve as a starting point. The effect of welding techniques on the impact resistance of the weldments should be investigated. Typical structural components should be designed, fabricated and impact tested using these techniques to obtain recommended procedures.

5. Procedures for obtaining impact resistant steel structural shapes should be developed. In this effort the cooperation of the steel industry may be required. An inexpensive way of manufacturing steels that possess uniformly high impact strength at low temperatures in addition to the other desirable properties such as

high static strength, high elongation, good corrosion resistance, and good weldability is needed. These steels may then be specified for use in the impact areas of the vehicles.

6. The deflection shield system should be installed on a locomotive and subjected to validation testing. Upon successful validation of the concept, further development of the deflection shield and of the cab framework should be undertaken.

8. BIBLIOGRAPHY

1. Canadian National Railway Head-On Collision, December, 1974.

2. DOT/FRA Contract DOT TSC-821.

3. "Development and Experimental Verification to Determine Non-Linear Load Deflection Characteristics of Helicopter Substructure Subject to Crash Forces," G. Wittlin and K. C. Park, USA/AMRDL-TR-74-12A, May, 1974.

4. Widmayer, E., Tanner, A. and Klump, R., "Crashworthiness Analysis of the UMTA State-of-the-Art Cars," DOT-TSC-UMTA-75-19, (PB-247-230/6WT), Transportation Systems Center, Cambridge, MA., June 1975.

5. Tong, P., "Mechanics of Train Collision," DOT-TSC-FRA-76-5, April 1976.

6. Cramer, P.L. and Anderson, R.L., "Train-to-Train Impact Tests," Volume I and II, Dynamics Science Report No. 8261-75-155, DOT-TSC-840.

7. Kennedy, Ralph G., III, Lloyd, Frank H., Lowery, Dr. Robert, "A Methodology for Evaluating the Economic Impacts of Applying Railroad Safety Standards," DOT-FRA-20047, Volume I and II, October, 1974.

8. "Discount Rates to be Used in Evaluating Time-Distributed Costs and Benefits," DOT Order 5000.1, June 30, 1972.

9. Widmayer, E., "A Structural Survey of Classes of Vehicles for Crashworthiness — Structural Design of a Crashworthy Locomotive", DOT-TSC-856-3, December 1977.

10. Kesack, W.J., Ross, R., and Widmayer, E., "A Structural Survey of Classes of Vehicles for Crashworthiness — Accident Data Review", Volume 1, Rept. DOT-TSC-856-1, July 1975.

11. Robinson, J., Piccione, D., and Lamers, G., "Analysis of Cab Environment and Development of Design Alternatives", Volume I, PB262976, October 1976.

12. Roarck, Raymond J., "Formulas for Stress and Strain," Fourth Edition, Mc-Graw-Hill Book Company, 1965.

13. Kondo, Kyohei, and Pian, T.H.H., "Large Deformation of Rigid-Plastic Plates and Shells," M.I.T., to be published.

14. Tanner, A.E., and Widmayer, E., "Structural Analysis and Simulation," Boeing Vertol Report D210-11330-1, December 1977.

15. Widmayer, E., "Application of KRASH to the SOAC Accident-Aircraft Crashworthiness," University Press of Virginia, 1975.

16. Whittlin, G. and Gamon, M.A., "Experimental Program for the Development of Improved Helicopter Structural Crashworthiness Analytical and Design Techniques," USAAMRDL Reports 72-12A, 72-12B, Eustis Directorate, U.S. Army Air Mobility R&D Laboratory, Ft. Eustis, Va., May 1973.

17. Salus, W.L., Ching-u Ip, VanDerlinden, J.W., "STKWKT – A Computer Program to Calculate the Elastic-Plastic Dynamic Response of Beam Structures," Report D2-126109-1, The Boeing Co., Seattle, WA, November 1970.

18. Kurz, F., "Identification and Categorization of Accidents and Injuries in Cabs of Locomotives," FRA-OPP-73-3, Department of Transportation, Federal Railroad Administration, Washington, D.C., September, 1972.

19. Hawthorne, K.L., "A Preliminary Study of Head-On and Rear-End Collisions Involving Locomotives," V-804-74-01, Association of American Railroads for the Locomotive Control Compartment Committee, Washington, D.C., January 1974.

20. "Collision of Illinois Central Gulf Railroad Commuter Trains," National Transportation Safety Board Railroad Accident Report No. NTSB-RAR-73-5, Chicago, Illinois, October 30, 1972.

21. Romeo, D.J. and Cassidy, R.J., "Final Report on Assessment of Crashworthiness of Existing Urban Rail Vehicles," Report DOT-TSC-681, Department of Transportation, Transportation Systems Center, Cambridge, MA., June 1975.

22. Hohenemser, H.B., Diboll, W.B., Yin, S.K. and Szabo, B.A., "Computer Simulation of Tankcar Head Puncture Mechanisms, Classifiecation Yard Accidents," Report FRA-ORD and D-75-23, Department of Transportation, Federal Railroad Administration, Washington, D.C., February 1975.

23. Raidt, J.B., "A Preliminary Study of Vertical Motions During Impact," Final Report, Pullman-Standard Research Project No. 38-185 3, August 1972.

9. APPENDIX – REPORT OF NEW TECHNOLOGY

The work performed under this contract, while leading to no new technology, has led to several innovative concepts on the design of crashworthy vehicles. In particular, the use of a deflection shield and the use of a crash station were introduced. Details of the deflection shield and details of the crash station appear in Section 6.

DOT LIBRARY
00082510