This mailing contains revisions to both

English and Metric versions of the

Standard Road Plans

effective for the **04-17-12** letting.

The pink memos, describing the revisions made,

should be retained in the "Revision Letters" section

in the back of the manuals for future reference.

Federal and state laws prohibit employment and/or public accommodation discrimination on the basis of age, color, creed, disability, gender identity, national origin, pregnancy, race, religion, sex, sexual orientation or veteran's status. If you believe you have been discriminated against, please contact the Iowa Civil Rights Commission at 800-457-4416 or Iowa Department of Transportation's affirmative action officer. If you need accommodations because of a disability to access the Iowa Department of Transportation's services, contact the agency's affirmative action officer at 800-262-0003.

Iowa Department of Transportation
Highway Division

TO:	**Holders of Standard Road Plans**	**TRANSMITTAL DATE:**	
FROM:	**Office of Design**	**REVISION DATE:**	**04-17-12**
SUBJECT:	**Revision of Manual (English)**		

INSTRUCTIONS: The attached Standard Road Plans have received approval and may be referred to in the plans by number. Questions concerning the distribution of revisions to the manual should be directed to the Office of Document Services, telephone (515) 239-1940. Questions concerning information contained on the Standard Road Plans should be directed to the Methods Section, Office of Design, telephone (515) 239-1133 or email amy.tinken@dot.iowa.gov.

Item Description	Description of Revision
Note	The following revisions are effective with the April 17, 2012 letting. Projects let prior to this date may reference earlier versions of these Standard Road Plans.
BA INDEX	
BA-106	Made spacing and dimensions of 5g2 and 5g3 bars dependent upon concrete barrier bar spacing and paved shoulder thickness.
EC INDEX	
EC-202	Added detail for Supplemental Installation.
EW INDEX	
EW-201	Modified the temporary grading surface in Section C-C.
EW-202	Modified the temporary grading surface in Section C-C.
EW-203	Modified the temporary grading surface in Section C-C.
EW-204	Modified the temporary grading surface in Section C-C.
MI INDEX	
MI-210	Removed "6in" from Sidewalk, P.C. Concrete bid item and modified circle note 7 to allow thickness to match drive.
MI-220	Modified location of Detail 'B',added Section D-D, and changed title.
MI-221	Changed Figure number to 9070.221. Added "or flatter" to clarify slope labels.
PM INDEX	
PM-220	New. Layout from Traffic Safety Manual.
PM-221	New. Layout from Traffic Safety Manual.
PM-230	New.
PV INDEX	
PV-012	Added drawing to sheet 2 to clarify procedure for gapping rumble strips for a pedestrian crossing.
PV-101	Added new note 26. Added Placement Limits drawings on sheet 8.
PV-302	Added Possible Tabulation.
PV-304	Updated Diagrammatic Profiles of the Pavement Edge Lines on sheet 4. Added Possible Tabulation. Modified circle note 2.

PV-305	Added Possible Tabulation.
RF INDEX	
RF-19B	Updated notes and added Possible Tabulation and Possible Contract Items.
RF-42	Added option for elliptical pipe. Changed title. Changed Possible Contract Item to "Low Clearance Concrete Pipe Aprons".
RK INDEX	
RK-20	Removed note in Detail 'C' that allowed the contractor to trench through Modified Subbase.
RK-25	Removed note in Detail 'C' that allowed the contractor to trench through Modified Subbase.
RK-26	Removed note in Detail 'C' that allowed the contractor to trench through Modified Subbase.
RK-27	Removed note in Detail 'C' that allowed the contractor to trench through Modified Subbase.
RR INDEX	
RR-1	Increased minimum patch length from 6' to 10' and added Polymer Grid under Subbase Patch.
SW INDEX	
SW-304	Modified note 3 on sheet 2.
SW-404	Modified note 3 on sheet 2.
SW-603	Modified dimensions on Type 'Q' and Type 'R' grates.
TC INDEX	
TC-030	Removed "or Vertical Panel" from 42" Channelizer in Legend. Moved circle note 1 information to specifications.
TC-061	Removed "or Vertical Panel" from 42" Channelizer in Legend and added sheet 1.
TC-062	Changed title to add the word 'Divided'.
TC-063	New.
TC-064	New.
TC-202	Removed "or Vertical Panel" from 42" Channelizer in Legend.
TC-203	No significant changes. Changed to color.
TC-211	Removed "or Vertical Panel" from 42" Channelizer in Legend. Removed Drum information already in the specifications.
TC-212	No significant changes. Changed to color.
TC-213	Removed "or Vertical Panel" from 42" Channelizer in Legend.
TC-214	Removed "or Vertical Panel" from 42" Channelizer in Legend.
TC-215	Removed "or Vertical Panel" from 42" Channelizer in Legend.
TC-216	No significant changes. Changed to color.
TC-218	Removed "or Vertical Panel" from 42" Channelizer in Legend.
TC-228	Removed "or Vertical Panel" from 42" Channelizer in Legend.
TC-232	No significant changes. Changed to color.
TC-251	No significant changes. Changed to color.

TC-252	Added Road Closure symbol for Safety Closures and graphics to show location of signs on Type III barricade. Changed title.
TC-253	Added Road Closure symbol for Safety Closures.
TC-272	No significant changes. Changed to color.
TC-402	Removed "or Vertical Panel" from 42" Channelizer in Legend.
TC-403	No significant changes. Changed to color.
TC-416	Removed "or Vertical Panel" from 42" Channelizer in Legend.
TC-417	Removed "or Vertical Panel" from 42" Channelizer in Legend.
TC-418	Removed "or Vertical Panel" from Channelizer in Legend. Modified circle notes. Added reduced speed ahead signs.
TC-419	Removed "or Vertical Panel" from 42" Channelizer in Legend. Incorporated circle note 1 into Section 2528 of the Specifications.
TC-420	Removed "or Vertical Panel" from 42" Channelizer in Legend.
TC-421	Removed "or Vertical Panel" from 42" Channelizer in Legend. Added W20-5 signs.
TC-422	Removed "or Vertical Panel" from 42" Channelizer in Legend. Modified circle notes.
TC-423	Removed "or Vertical Panel" from Legend. Moved circle note 1 into specs. Changed "head-to-head" wording to "two-way two-lane" in general note.
TC-429	Removed "or Vertical Panel" from 42" Channelizer in Legend. Removed circle note 1.
TC-431	No significant changes. Changed to color.
TC-432	No significant changes. Changed to color.
TC-451	No significant changes. Changed to color.
TC-454	Removed "or Vertical Panel" from 42" Channelizer in Legend. Modified circle note 1.

SECTION

BA

Barriers

NO.	DATE	TITLE
		Concrete Barriers
BA-100	04-20-10	44" Concrete Median Barrier (Full Section)
BA-101	04-20-10	44" Concrete Median Barrier Width Transition
BA-102	04-19-11	44" Concrete Barrier (Half Section)
BA-103	04-20-10	34" Concrete Barrier (Half Section)
BA-104	04-20-10	34" Concrete Barrier for use with Reinforced Paved Shoulder
BA-105	04-20-10	34" to 44" Concrete Barrier Transition Section
BA-106	04-17-12	Reinforced Paved Shoulder for Concrete Barrier
BA-107	10-18-11	Concrete Barrier End Section
BA-108	04-19-11	Concrete Barrier Tapered End Section
BA-150	04-19-11	Side Obstacle Protection with Concrete Barrier and Guardrail
		Steel Beam Guardrail
BA-200	10-18-11	Steel Beam Guardrail Components
BA-201	10-19-10	Steel Beam Guardrail Barrier Transition Section
BA-202	10-18-11	Steel Beam Guardrail Bolted End Anchor
BA-203	10-18-11	Steel Beam Guardrail W-Beam End Anchor
BA-204	10-18-11	Steel Beam Guardrail Thrie-Beam End Anchor
BA-205	10-18-11	Steel Beam Guardrail End Terminal
BA-206	10-18-11	Steel Beam Guardrail Flared End Terminal For Cable Connection
BA-210	04-20-10	Guardrail Post Adaptor Unit
BA-250	10-18-11	Steel Beam Guardrail Installation at Concrete Barrier or Bridge End Post
BA-251	10-18-11	Steel Beam Guardrail Installation at Side Obstacle (Two-Way Protection)
BA-252	10-18-11	Steel Beam Guardrail Installation at Side Obstacle (One-Way Protection)
BA-253	10-18-11	Steel Beam Guardrail Installation at Railroad Signal
		Cable Guardrail
BA-351	04-20-10	High Tension Cable Guardrail

SECTION

BA

Barriers

NO.	DATE	TITLE
		Temporary Barrier Rails
BA-400	04-20-10	Temporary Barrier Rail (Steel)
BA-401	04-20-10	Temporary Barrier Rail (Precast Concrete)
		Crash Cushions
BA-500	04-20-10	Temporary Crash Cushions Sand Barrel

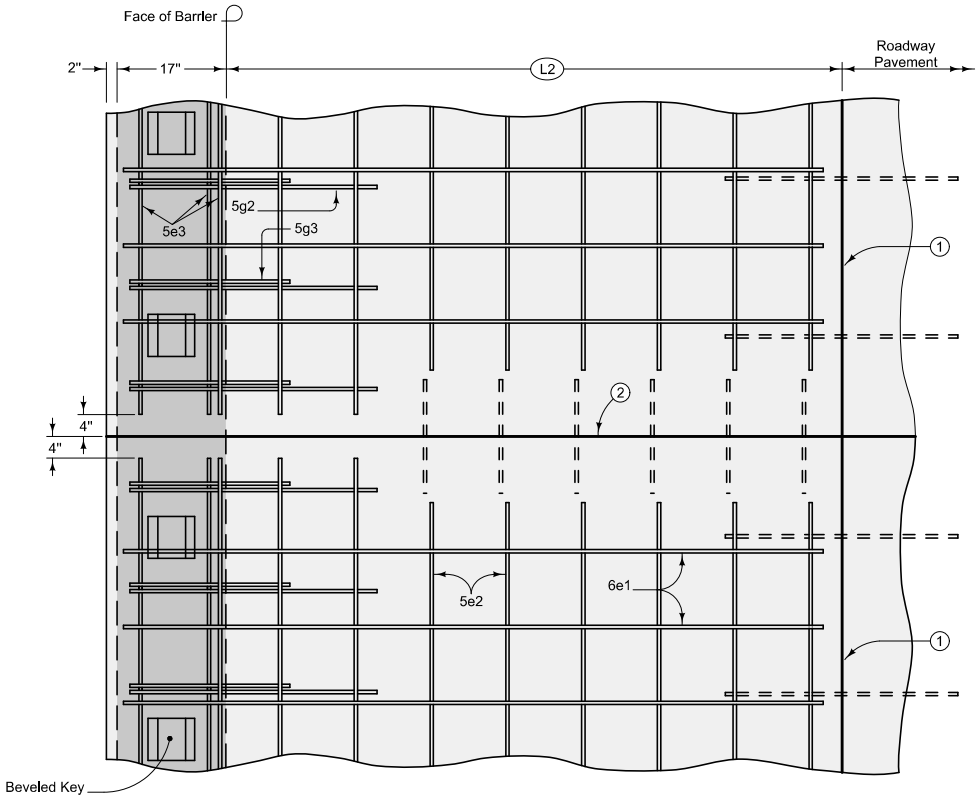

PLAN

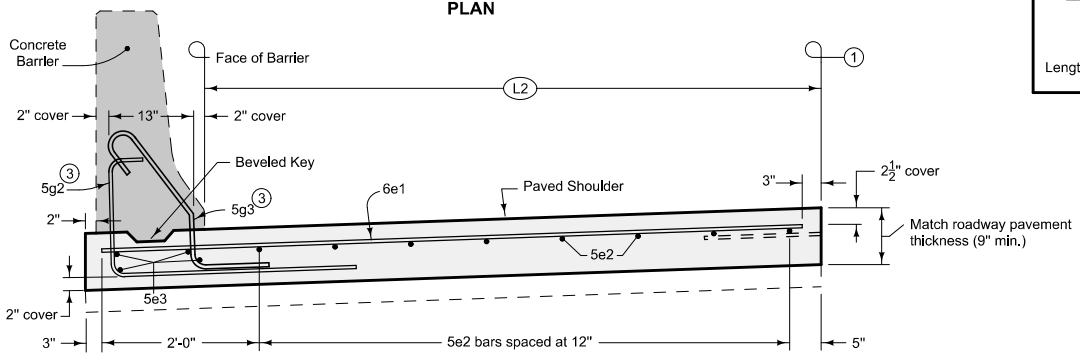

TYPICAL SECTION

REINFORCING BAR LIST Per Shoulder Panel (Approximately 20 Linear Feet)				
L2	Bar	Number of Bars	Length	Spacing
4'	6e1	18	5'-1"	12"
	5e2	4	18'-0"	12"
6'	6e1	18	7'-1"	12"
	5e2	6	18'-0"	12"
8'	6e1	18	9'-1"	12"
	5e2	8	18'-0"	12"
10'	6e1	18	11'-1"	12"
	5e2	10	18'-0"	12"
12'	6e1	18	13'-1"	12"
	5e2	12	18'-0"	12"
Applies to all Shoulder Widths	5e3	4	18'-8"	See Drawing
	5g2 (3)	varies	varies	(5)
	5g3 (3)	varies	varies	(5)

ESTIMATED SHOULDER QUANTITIES Per Linear Foot					
	L2				
	4'	6'	8'	10'	12'
Concrete Sq. Yds.	0.62	0.84	1.06	1.29	1.51

BENT BAR DETAILS

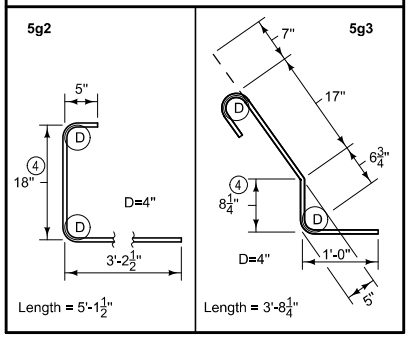

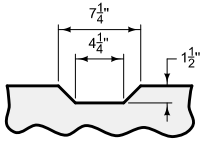

BEVELED KEY

Use 2 x 8 lumber 8" long to make keys.
Place keys at 2'-8" centers.

(1) 'L-2' or 'KT-2' joint. When roadway pavement is existing, use 'BT-3' joint. See PV-101.

(2) 'CD' joint. Match roadway joint locations. See PV-101. No 'CD' joint baskets required within 4' of outside edge of shoulder.

(3) When shoulder will be located under a concrete barrier end section, replace 5g2 and 5g3 bars with reinforcement as shown on BA-107.

(4) Increase these dimensions by one inch for every inch of paved shoulder thickness greater than 9 inches.

(5) Match spacing of vertical bars in concrete barrier.

Possible Contract Item:
Reinforced Paved Shoulder

Possible Tabulation:
108-18B

Iowa Department of Transportation

REVISION 3 04-17-12

STANDARD ROAD PLAN

BA-106

SHEET 1 of 1

REVISIONS: Made spacing and dimensions of 5g2 and 5g3 bars dependent upon concrete barrier bar spacing and paved shoulder thickness.

Deanna Maifield
APPROVED BY DESIGN METHODS ENGINEER

REINFORCED PAVED SHOULDER FOR CONCRETE BARRIER

SECTION

EC

Erosion Control

NO.	DATE	TITLE
EC-101	04-20-10	Wood Excelsior Mat for Ditch Protection
EC-102	04-20-10	Sod for Ditch Protection
EC-103	04-20-10	Wood Excelsior Mat for Slope Protection
EC-201	04-20-10	Silt Fence
EC-202	04-17-12	Floating Silt Curtain
EC-501	04-20-10	Trees and Shrubs

DESIGNER INFO

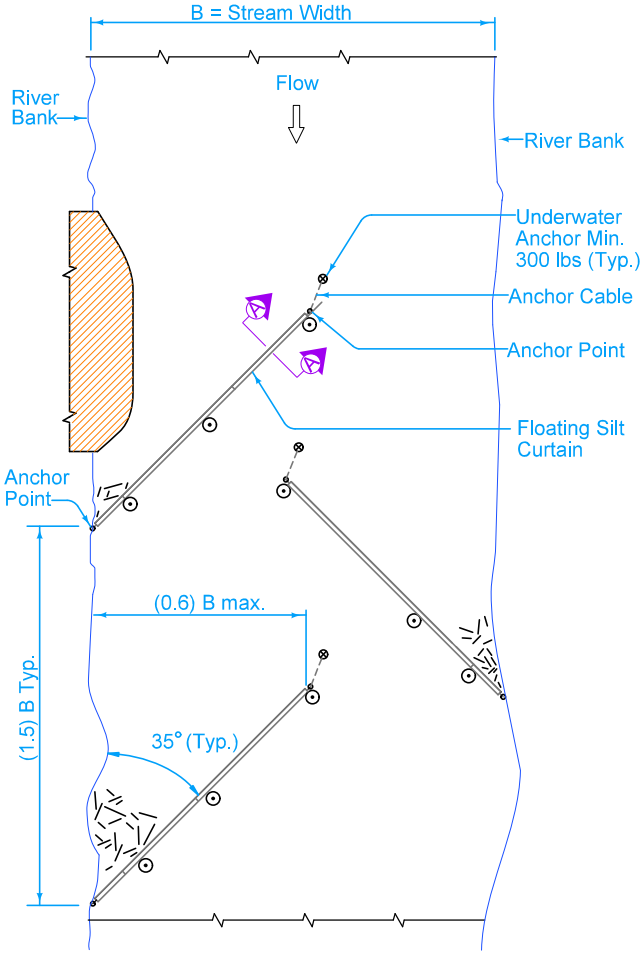

PLAN
Supplemental Installation

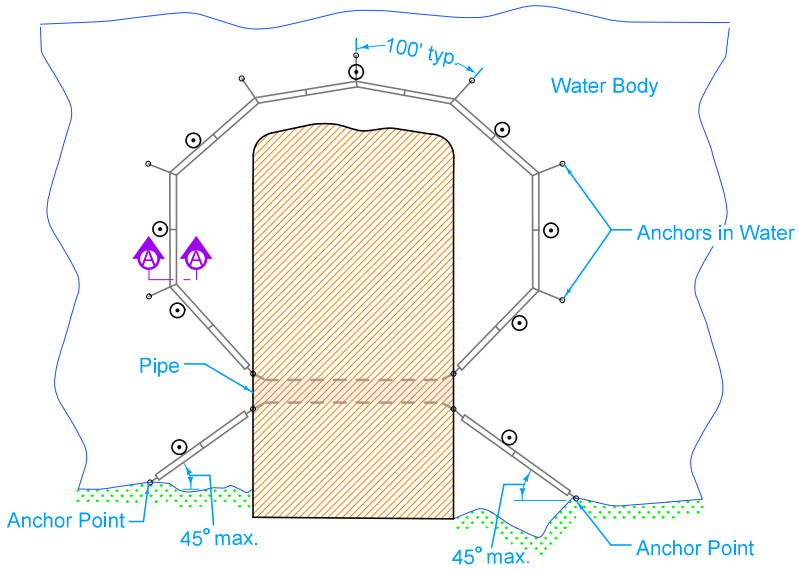

PLAN
Locations with pipe
Under stream crossing or causeway

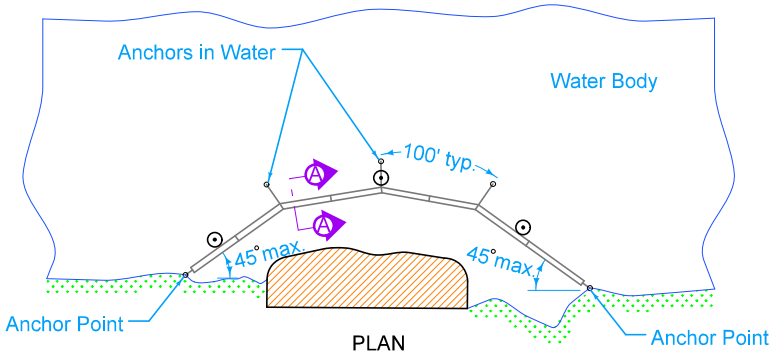

PLAN
Locations without pipe
Under causeway or pad

LEGEND

- Carrier Float
- Buoy
- Shore
- Work Area

Keep silt curtain as close to work area as possible.

Anchors and weights are to be as recommended by manufacturer. Construct floating silt curtain of fabric fastened to a flotation carrier and weighted along the bottom edge. Depth of curtain is the dimension of the curtain fabric extending below the flotation, i.e. hanging in the water. Upon completion of the work, remove the curtain in a manner that will prevent re-suspension of sediment into the water.

Install according to Hanging Installation unless otherwise specified.

Possible Tabulation:
100-10

Possible Contract Items:
Clean-out of Floating Silt Curtian (Containment)
Floating Silt Curtian (Containment)
Floating Silt Curtian (Hanging)

Iowa Department of Transportation

STANDARD ROAD PLAN

REVISION	
3	04-17-12

EC-202

SHEET 1 of 2

REVISIONS: Added detail for Supplemental Installation.

Deanna Maifield
APPROVED BY DESIGN METHODS ENGINEER

FLOATING SILT CURTAIN

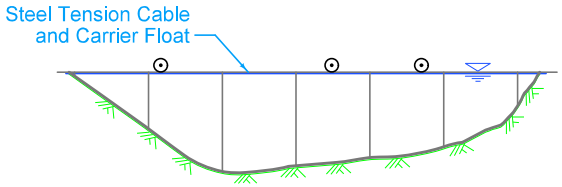

PROFILE

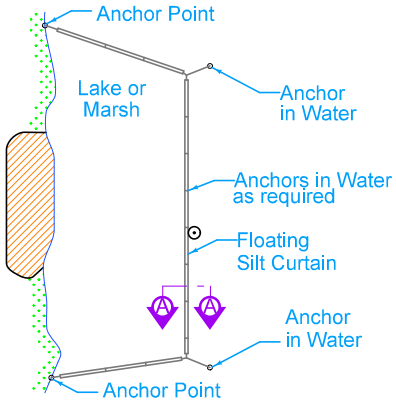

PLAN
Still Water Only

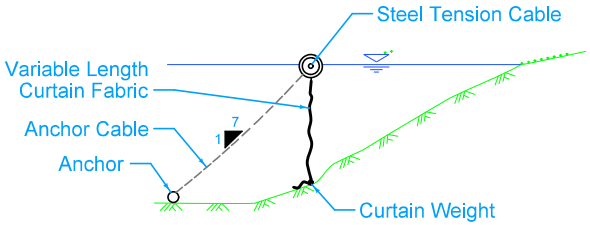

SECTION A-A
Hanging Installation

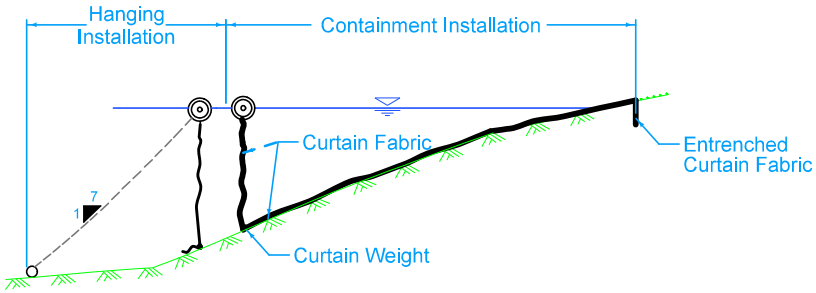

SECTION A-A ①
Containment Installation

① When Containment Installation is specified, it will be in combination with a Hanging Installation that is paid for separately.

Remove containment by pulling buoy towards land until it reaches trench line. Remove entrenched fabric and pull both ends up and out of the water. Move silt and fabric offsite to ensure total containment.

LEGEND

- Carrier Float
- Buoy
- Water Surface

Iowa Department of Transportation

REVISION	
3	04/17/12

STANDARD ROAD PLAN

EC-202

SHEET 2 of 2

REVISIONS: Added detail for Supplemental Installation.

Deanna Maifield
APPROVED BY DESIGN METHODS ENGINEER

FLOATING SILT CURTAIN

SECTION

EW

Earthwork

NO.	DATE	TITLE
EW-101	04-19-11	Embankment and Rebuilding Embankments
EW-201	04-17-12	Bridge Berm Grading without Recoverable Slope (Barnroof Section)
EW-202	04-17-12	Bridge Berm Grading without Recoverable Slope (Non-Barnroof Section)
EW-203	04-17-12	Bridge Berm Grading with Recoverable Slope (Non-Barnroof Section)
EW-204	04-17-12	Bridge Berm Grading with Recoverable Slope (Barnroof Section)
EW-301	04-19-11	Guardrail Grading

Grading surface:
Refer to berm slope location table in project plans for locations of A, B, W and possible other points.

1. Variable slope.
2. Bridge Berm slope may vary and is determined by the A and B points. Slope is normally 2.5:1 or flatter.
3. Refer to contract documents for limits of the slope protection.

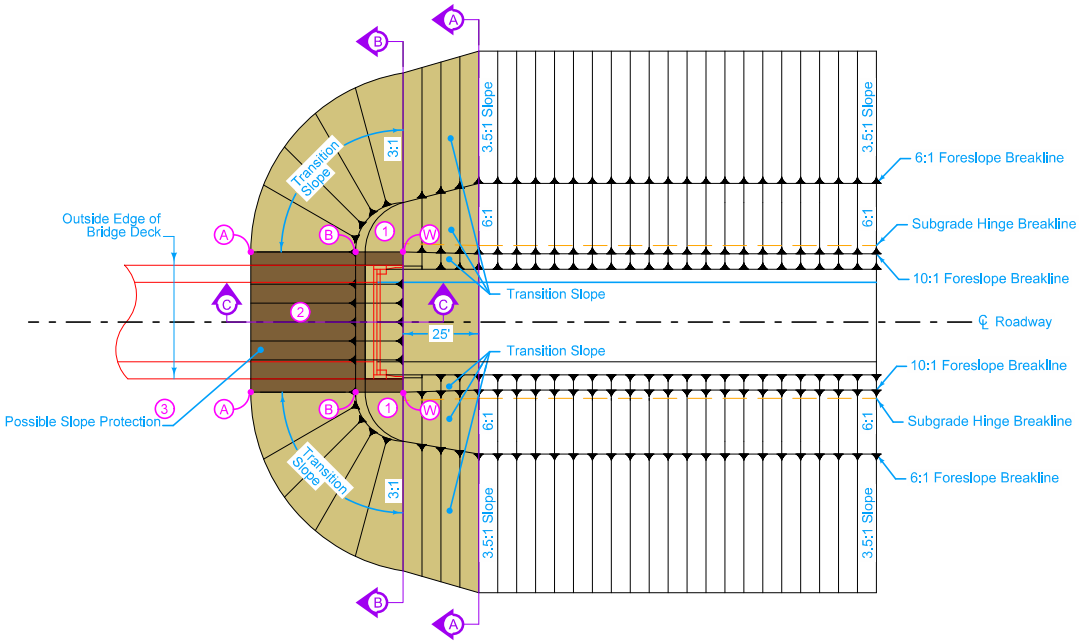

PLAN VIEW OF BRIDGE BERM
(BARNROOF FORESLOPE)

Iowa Department of Transportation

REVISION	
2	04-17-12

STANDARD ROAD PLAN

EW-201

SHEET 1 of 3

REVISIONS: Modified the temporary grading surface in Section C-C.

Deanna Maifield
APPROVED BY DESIGN METHODS ENGINEER

BRIDGE BERM GRADING
WITHOUT RECOVERABLE SLOPE
(BARNROOF SECTION)

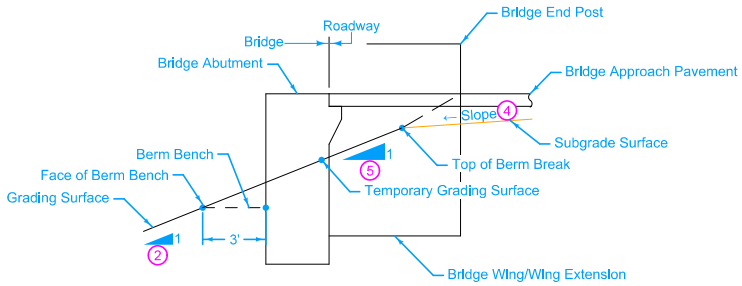

SECTION C-C

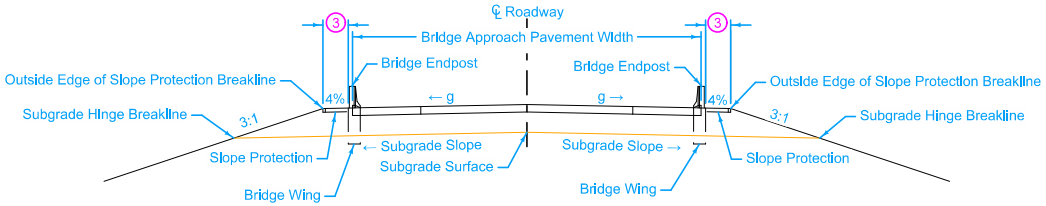

SECTION B-B

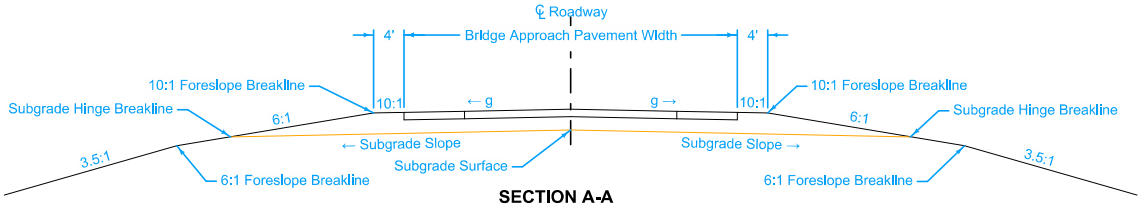

SECTION A-A

2 Bridge Berm slope may vary and is determined by the A and B points.

3 Refer to contract documents for limits of the slope protection.

4 Refer to RK series for longitudinal subgrade slope.

5 Temporary grading slope.

g = Pavement cross slope.

Iowa Department of Transportation

STANDARD ROAD PLAN

REVISION	
2	04-17-12

EW-201

SHEET 2 of 3

REVISIONS: Modified the temporary grading surface in Section C-C.

Deanna Maifield
APPROVED BY DESIGN METHODS ENGINEER

BRIDGE BERM GRADING WITHOUT RECOVERABLE SLOPE (BARNROOF SECTION)

This image can be viewed in 3D on the the ERL or at our website http://www.iowadot.gov/design/stdrdpln.htm

This image can be viewed in 3D on the the ERL or at our website http://www.iowadot.gov/design/stdrdpln.htm

Iowa Department of Transportation

STANDARD ROAD PLAN

REVISION	
2	04-17-12

EW-201

SHEET 3 of 3

REVISIONS: Modified the temporary grading surface in Section C-C.

Deanna Maifield

APPROVED BY DESIGN METHODS ENGINEER

BRIDGE BERM GRADING WITHOUT RECOVERABLE SLOPE (BARNROOF SECTION)

Grading Surface:
Refer to berm slope location table in project plans for locations of A, B, W and possible other points.

1. Variable slope.
2. Bridge Berm slope may vary and is determined by the A and B points. Slope is normally 2.5:1 or flatter.
3. Refer to contract documents for limits of the slope protection.

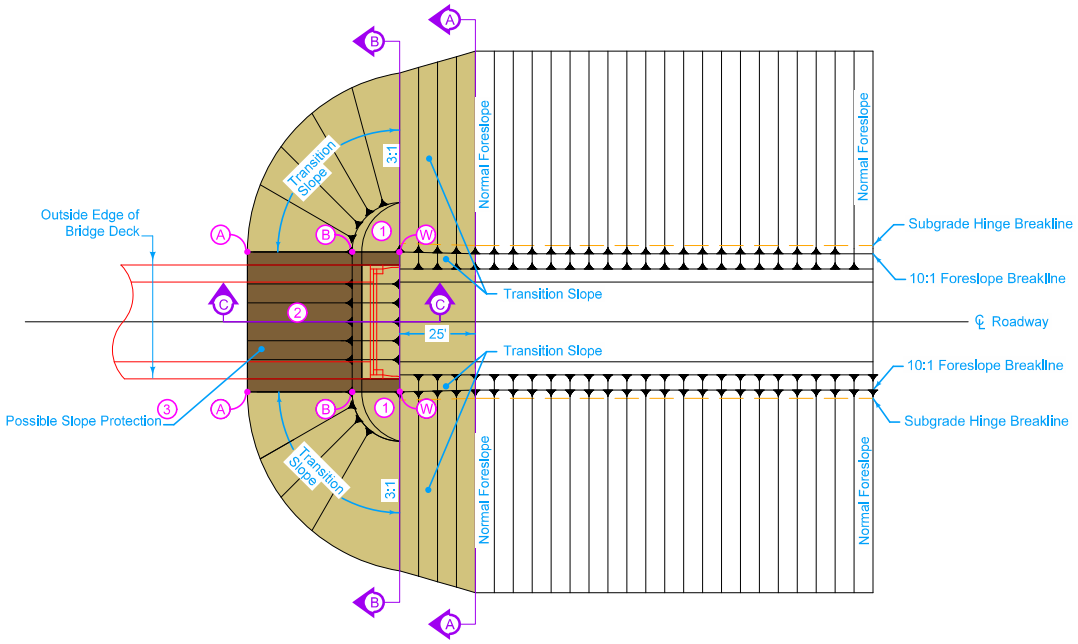

PLAN VIEW OF BRIDGE BERM
(NON-BARNROOF FORESLOPE)

Iowa Department of Transportation

REVISION	
2	04-17-12

STANDARD ROAD PLAN

EW-202

SHEET 1 of 3

REVISIONS: Modified the temporary grading surface in Section C-C.

Deanna Maifield
APPROVED BY DESIGN METHODS ENGINEER

BRIDGE BERM GRADING
WITHOUT RECOVERABLE SLOPE
(NON-BARNROOF SECTION)

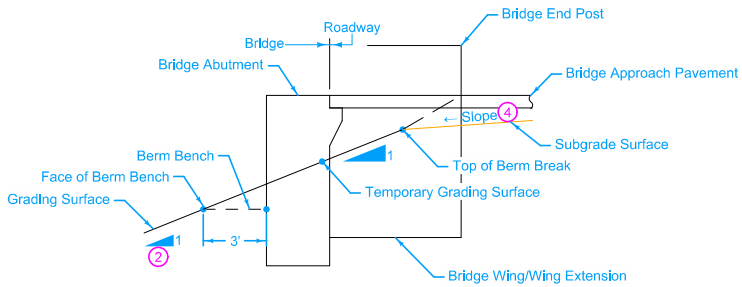

SECTION C-C

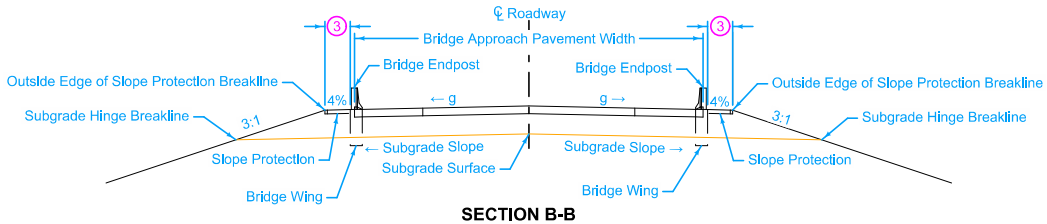

SECTION B-B

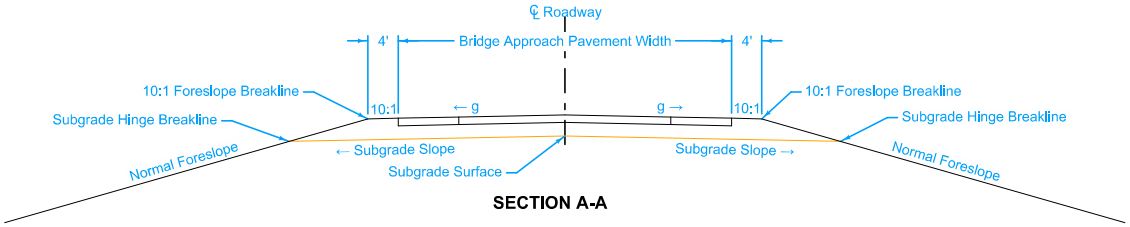

SECTION A-A

2 Bridge Berm slope may vary and is determined by the A and B points.

3 Refer to contract documents for limits of the slope protection.

4 Refer to RK series for longitudinal subgrade slope.

5 Temporary grading slope.

g = Pavement cross slope.

Iowa Department of Transportation

STANDARD ROAD PLAN

REVISION	
2	04-17-12

EW-202

SHEET 2 of 3

REVISIONS: Modified the temporary grading surface in Section C-C.

Deanna Maifield
APPROVED BY DESIGN METHODS ENGINEER

BRIDGE BERM GRADING WITHOUT RECOVERABLE SLOPE (NON-BARNROOF SECTION)

This image can be viewed in 3D on the the ERL or at our website http://www.iowadot.gov/design/stdrdpln.htm

This image can be viewed in 3D on the the ERL or at our website http://www.iowadot.gov/design/stdrdpln.htm

Iowa Department of Transportation

STANDARD ROAD PLAN

REVISION	
2	04-17-12

EW-202

SHEET 3 of 3

REVISIONS: Modified the temporary grading surface in Section C-C.

Deanna Maifield

APPROVED BY DESIGN METHODS ENGINEER

BRIDGE BERM GRADING WITHOUT RECOVERABLE SLOPE (NON-BARNROOF SECTION)

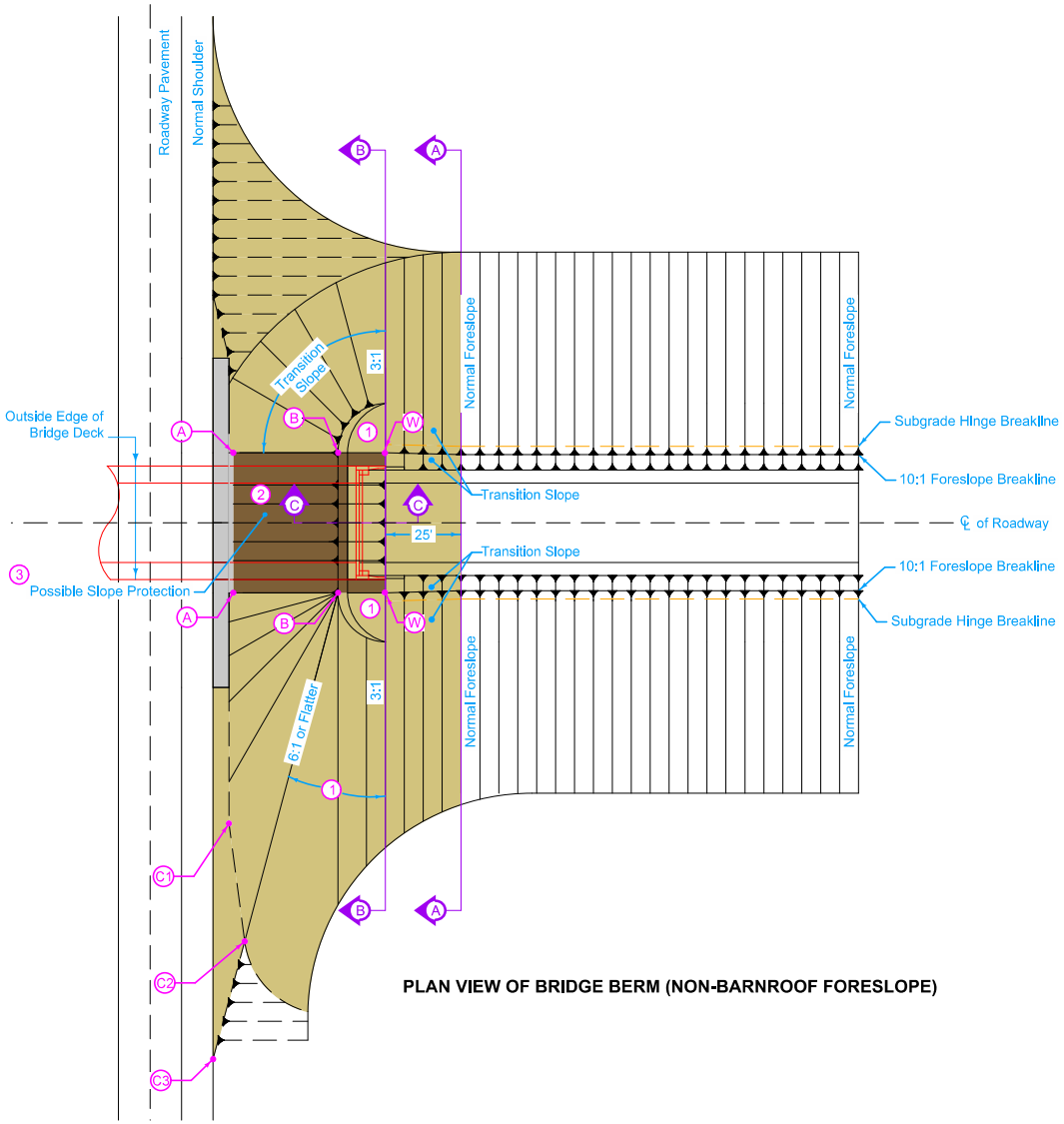

PLAN VIEW OF BRIDGE BERM (NON-BARNROOF FORESLOPE)

Grading Surface:
Refer to berm slope location table in project plans for locations of A, B, C, W and possible other points.

The cost of removel, stockpiling and placement of macadam stone shall be considered incidental to "Paved Shoulder, P.C. Concrete".

1. Special shaping.
2. Bridge Berm slope may vary and is determined by the A and B points. Slope is normally 2.5:1 or flatter.
3. Refer to contract documents for limits of the slope protection.

Possible Tabulation: 104-9

Iowa Department of Transportation

STANDARD ROAD PLAN

REVISION	
2	04-17-12

EW-203

SHEET 1 of 5

REVISIONS: Modified the temporary grading surface in Section C-C.

Deanna Maifield
APPROVED BY DESIGN METHODS ENGINEER

BRIDGE BERM GRADING WITH RECOVERABLE SLOPE (NON-BARNROOF SECTION)

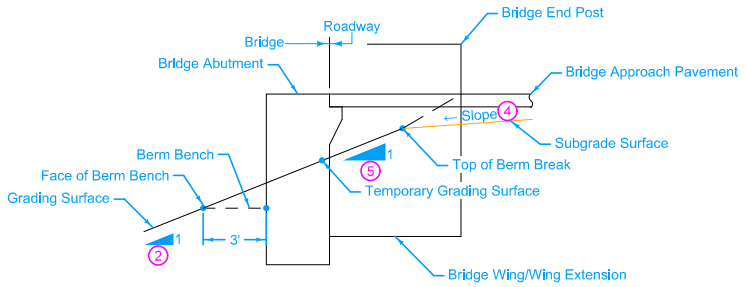

SECTION C-C

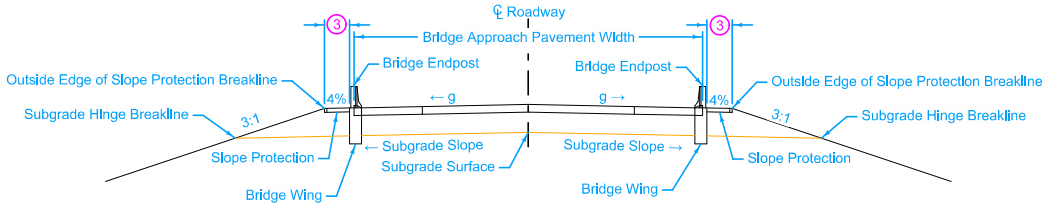

SECTION B-B

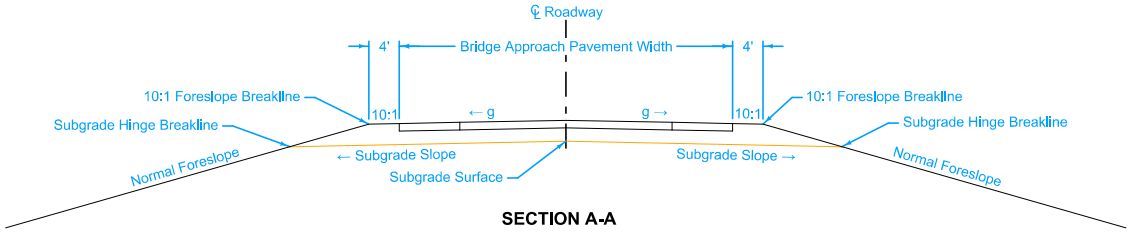

SECTION A-A

2 Bridge Berm slope may vary and is determined by the A and B points. Slope is normally 2.5:1 or flatter.

3 Refer to contract documents for limits of the slope protection.

4 Refer to RK series for longitudinal subgrade slope.

5 Temporary grading slope.

g = pavement cross slope.

Iowa Department of Transportation

STANDARD ROAD PLAN

REVISION	
2	04-17-12

EW-203

SHEET 2 of 5

REVISIONS: Modified the temporary grading surface in Section C-C.

Deanna Maifield
APPROVED BY DESIGN METHODS ENGINEER

BRIDGE BERM GRADING WITH RECOVERABLE SLOPE (NON-BARNROOF SECTION)

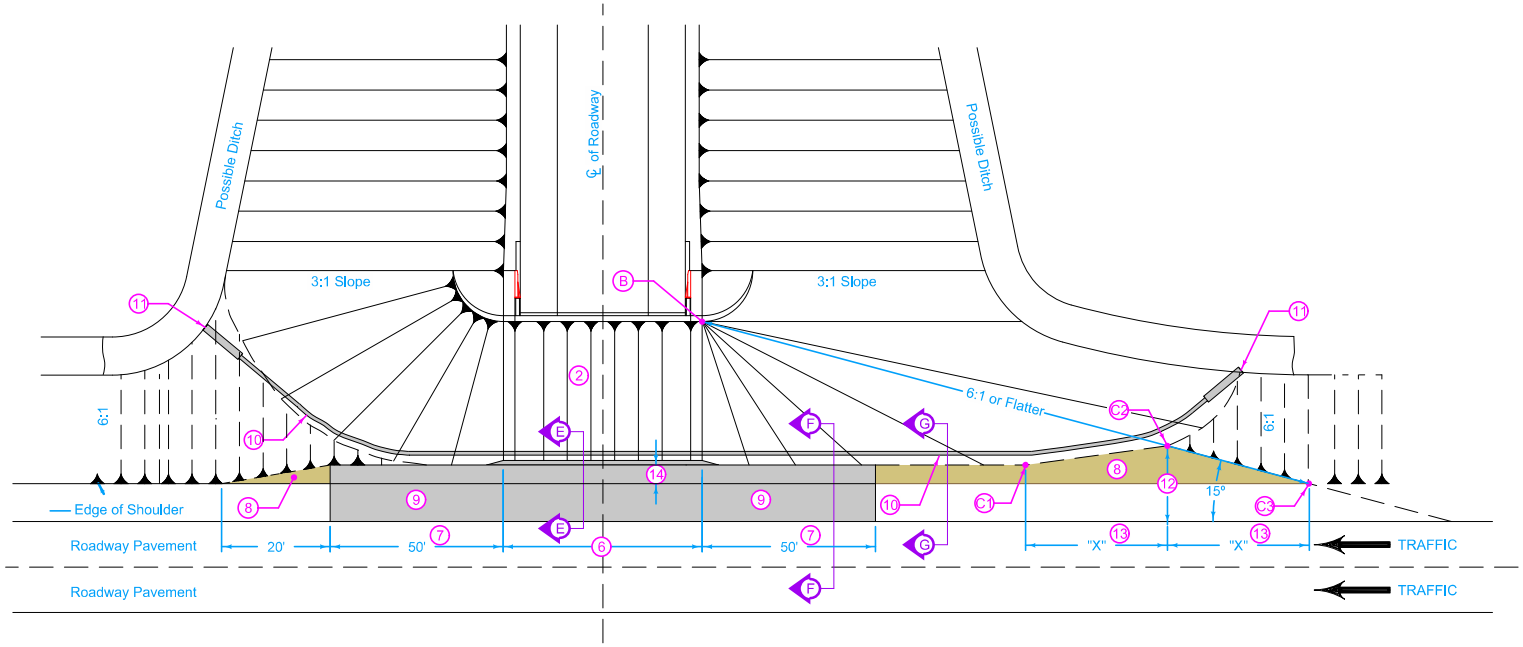

PLAN VIEW OF BRIDGE BERM AREA

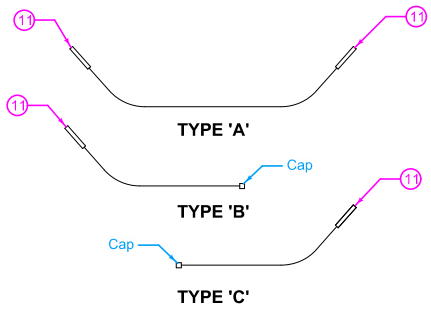

SUBDRAIN LAYOUT TYPES

2. Bridge Berm slope may vary and is determined by the A and B points. Slope is normally 2.5:1 or flatter.
6. Width of bridge slab + 3' on each side. Build 6" sloped curb to this width. Refer to PV-102 for curb details.
7. Includes curb runout length. Refer to PV-102 for curb runout details.
8. Match typical shoulder slope.
9. See typical cross-sections for details of paved shoulder.
10. Approximate location of bridge subdrain.
11. Refer to RF-19E subdrain outlet. When flow of subdrain does not require an outlet at both ends, cap the end without an outlet in a method approved by the Engineer.
12. 2 times typical shoulder width.
13. "X" distance based on station difference between points C2 and C3.
14. 5' offset unless otherwise noted on the Bridge Situation Plan. 4' offset minimum.

Iowa Department of Transportation

STANDARD ROAD PLAN

REVISION	
2	04-17-12

EW-203

SHEET 3 of 5

REVISIONS: Modified the temporary grading surface in Section C-C.

Deanna Maifield
APPROVED BY DESIGN METHODS ENGINEER

BRIDGE BERM GRADING WITH RECOVERABLE SLOPE (NON-BARNROOF SECTION)

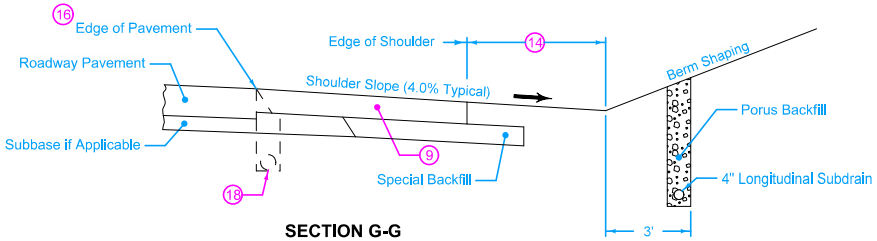

SECTION G-G

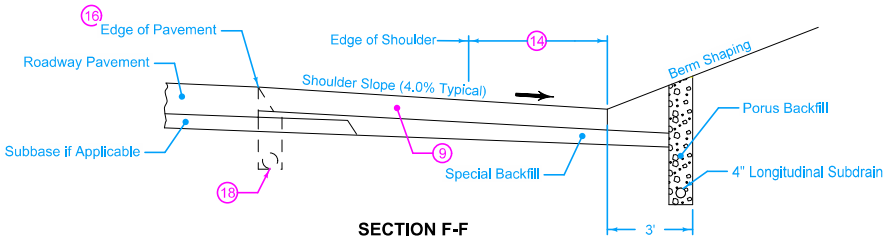

SECTION F-F

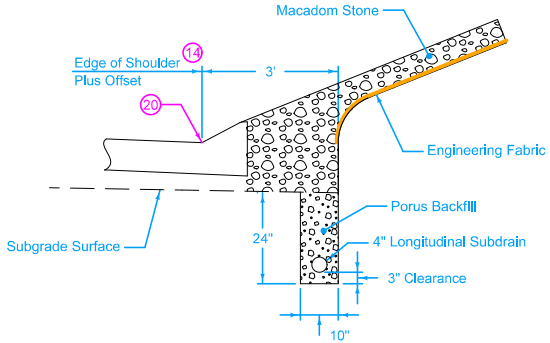

PARTIAL SECTION E-E
As constructed by others

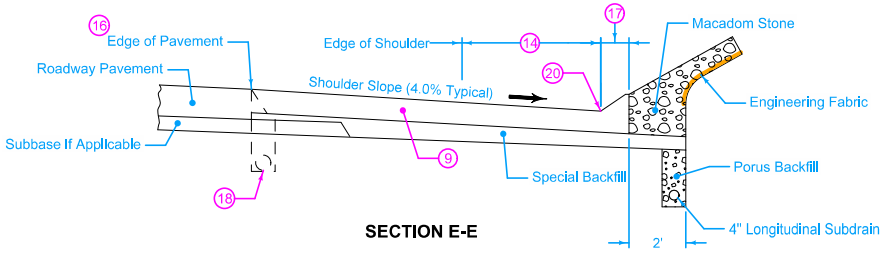

SECTION E-E

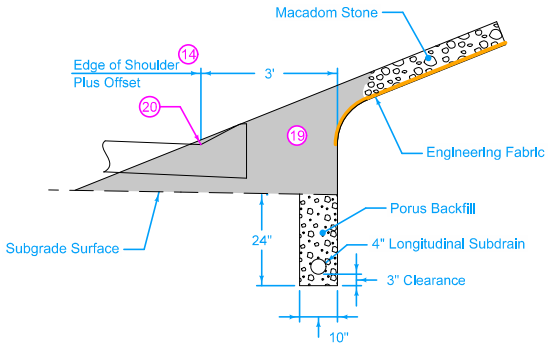

PARTIAL SECTION E-E
Proposed construction

9 See typical cross-sections for details of paved shoulder.

14 5' offset unless otherwise noted on the Bridge Situation Plan. 4' offset minimum.

16 If roadway pavement is newly-constructed PCC, use BT-1 or BT-2 joint. If roadway pavement is existing PCC, use BT-3, BT-4, or BT-5 joint. Refer to PV-101 joint details.

17 6" sloped curb. Refer to PV-102 curb details.

18 Roadway subdrain location. Use caution when excavating. Maintain porus material in trench to bottom of roadway pavement.

19 Remove and stockpile macadam stone. Carefully seperate the macadam stone from the surrounding soil. Preserve the integrity of the engineering fabric.

20 Toe of the berm. Refer to A points on the berm slope location table.

Iowa Department of Transportation

STANDARD ROAD PLAN

REVISION	
2	04-17-12

EW-203

SHEET 4 of 5

REVISIONS: Modified the temporary grading surface in Section C-C.

Deanna Maifield
APPROVED BY DESIGN METHODS ENGINEER

BRIDGE BERM GRADING WITH RECOVERABLE SLOPE (NON-BARNROOF SECTION)

This image can be viewed in 3D on the the ERL or at our website http://www.iowadot.gov/design/stdrdpln.htm

This image can be viewed in 3D on the the ERL or at our website http://www.iowadot.gov/design/stdrdpln.htm

Iowa Department of Transportation

STANDARD ROAD PLAN

REVISION	
2	04-17-12

EW-203

SHEET 5 of 5

REVISIONS: Modified the temporary grading surface in Section C-C.

Deanna Maifield

APPROVED BY DESIGN METHODS ENGINEER

BRIDGE BERM GRADING WITH RECOVERABLE SLOPE (NON-BARNROOF SECTION)

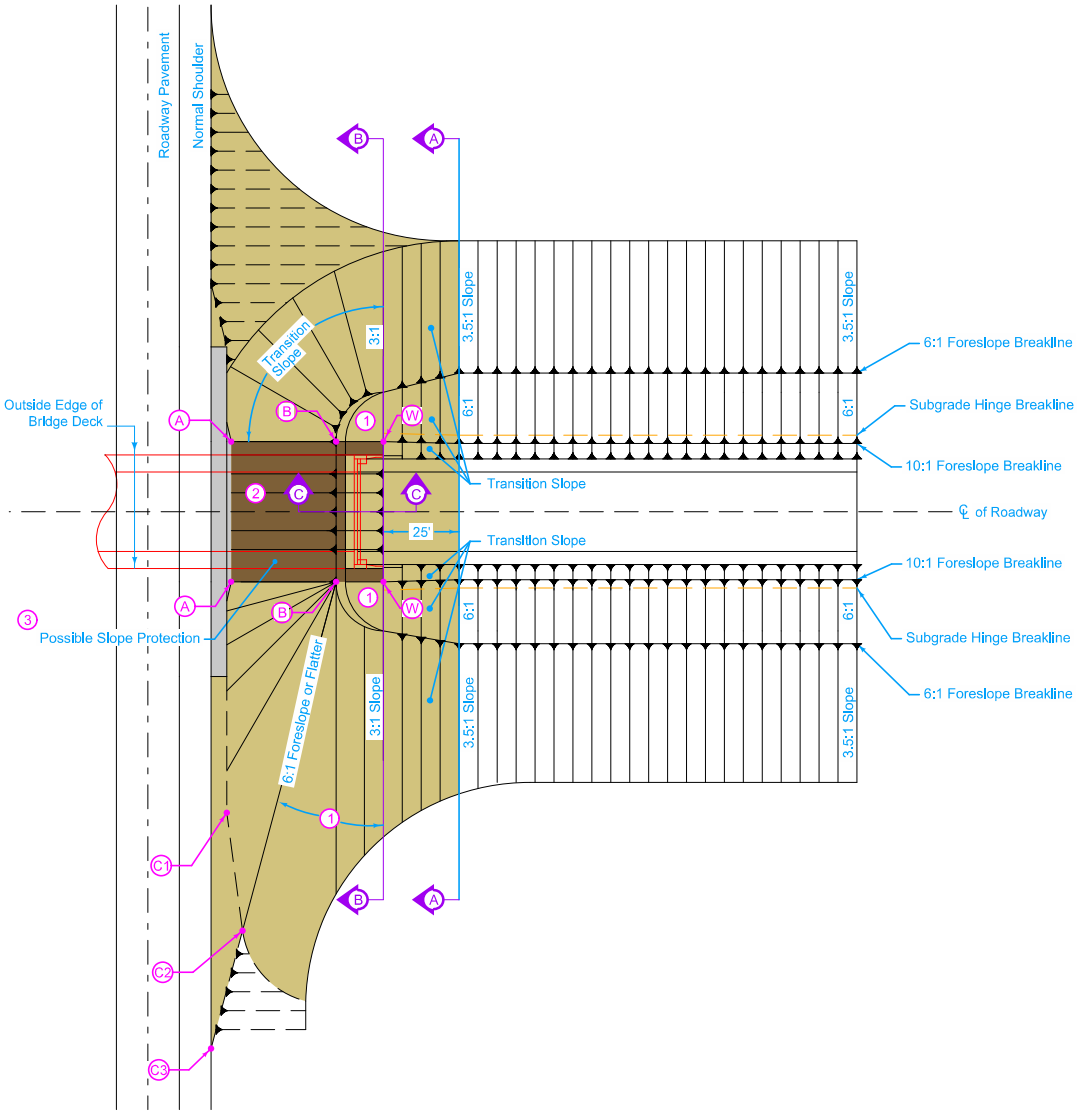

PLAN VIEW OF BRIDGE BERM (BARNROOF FORESLOPE)

Grading Surface:
Refer to berm slope location table in project plans for locations of A, B, C, W and possible other points.

The cost of removal, stockpiling and placement of macadam stone shall be considered incidental to "Paved Shoulder, P.C. Concrete".

1. Special shaping.
2. Face of Bridge Berm slope may vary and is determined by the A and B points. Slope is normally 2.5:1 or flatter.
3. Refer to contract documents for limits of the slope protection.

Possible Tabulation: 104-9

Iowa Department of Transportation

STANDARD ROAD PLAN

REVISION	
2	04-17-12

EW-204

SHEET 1 of 5

REVISIONS: Modified the temporary grading surface in Section C-C.

Deanna Maifield
APPROVED BY DESIGN METHODS ENGINEER

BRIDGE BERM GRADING WITH RECOVERABLE SLOPE (BARNROOF SECTION)

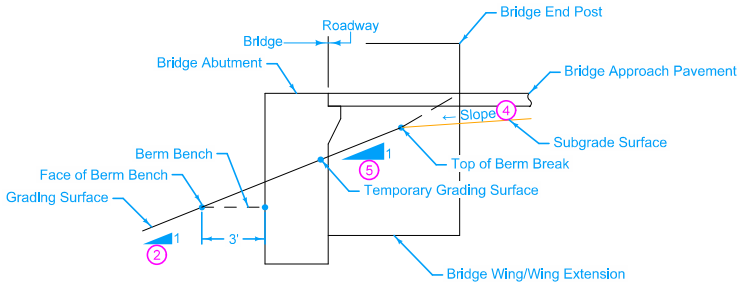

SECTION C-C

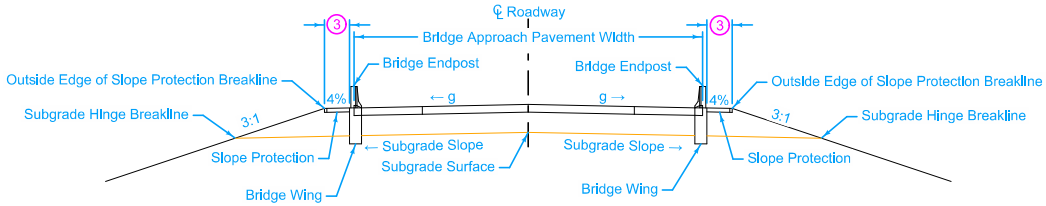

SECTION B-B

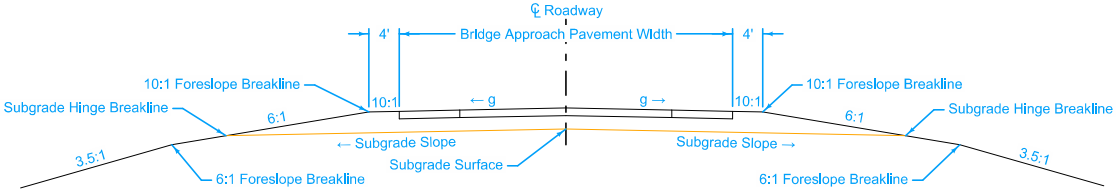

SECTION A-A

2 Bridge Berm slope may vary and is determined by the A and B points. Slope is normally 2.5:1 or flatter.

3 Refer to contract documents for limits of the slope protection.

4 Refer to RK series for longitudinal subgrade slope.

5 Temporary grading slope.

g = pavement cross slope.

Iowa Department of Transportation

STANDARD ROAD PLAN

REVISION	
2	04-17-12

EW-204

SHEET 2 of 5

REVISIONS: Modified the temporary grading surface in Section C-C.

Deanna Maifield
APPROVED BY DESIGN METHODS ENGINEER

BRIDGE BERM GRADING WITH RECOVERABLE SLOPE (BARNROOF SECTION)

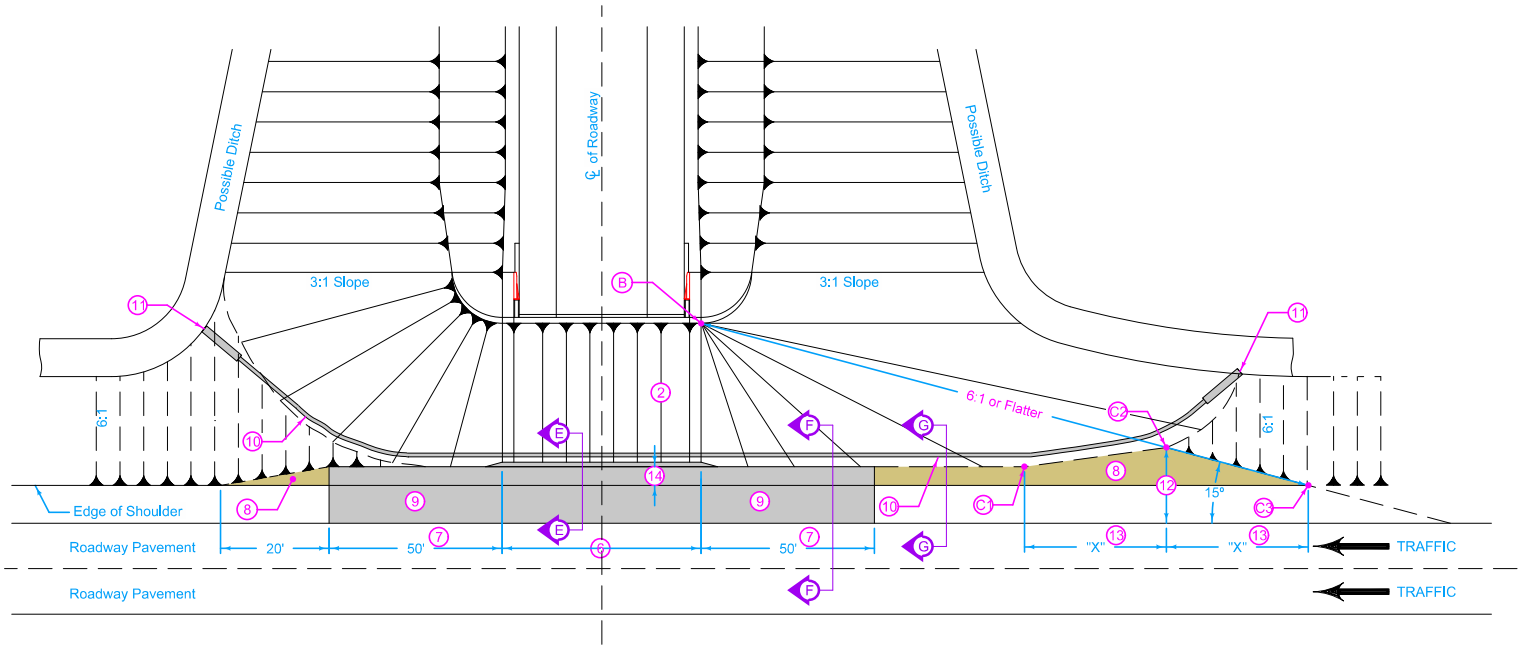

PLAN VIEW OF BRIDGE BERM AREA

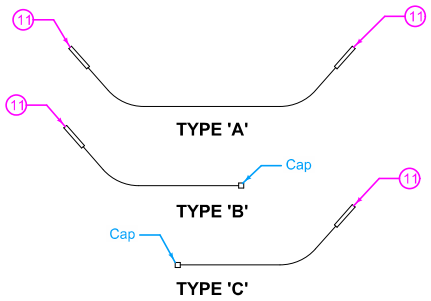

TYPE 'A'

TYPE 'B'

TYPE 'C'

SUBDRAIN LAYOUT TYPES

(2) Bridge Beam slope may vary and is determined by the A and B points. Slope is normally 2.5:1 or flatter.

(6) Width of bridge slab + 3' on each side. Build 6" sloped curb to this width. Refer to PV-102 for curb details.

(7) Includes curb runout length. Refer to PV-102 for curb runout details.

(8) Match typical shoulder slope.

(9) See typical cross-sections for details of paved shoulder.

(10) Approximate location of bridge subdrain.

(11) Refer to RF-19E subdrain outlet. When flow of subdrain does not require an outlet at both ends, cap the end without an outlet in a method approved by the Engineer.

(12) 2 times typical shoulder width.

(13) "X" distance based on station difference between points C2 and C3.

(14) 5' offset unless otherwise noted on the Bridge Situation Plan. 4' offset minimum.

Iowa Department of Transportation

STANDARD ROAD PLAN

REVISION	
2	04-17-12

EW-204

SHEET 3 of 5

REVISIONS: Modified the temporary grading surface in Section C-C.

Deanna Maifield

APPROVED BY DESIGN METHODS ENGINEER

BRIDGE BERM GRADING WITH RECOVERABLE SLOPE (BARNROOF SECTION)

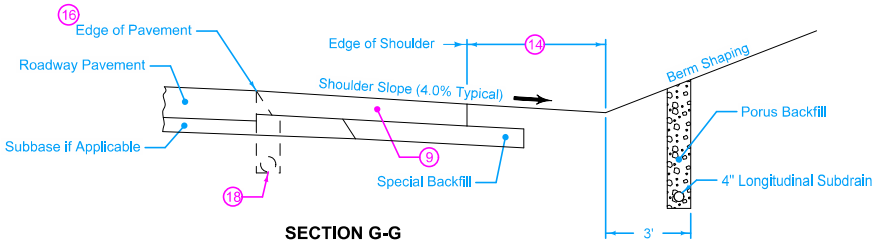

SECTION G-G

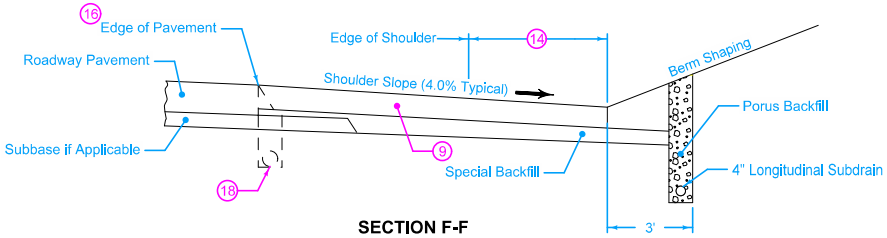

SECTION F-F

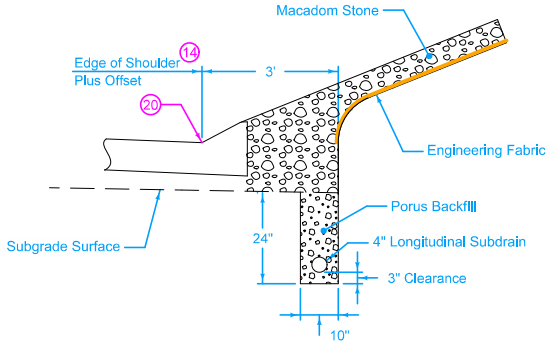

PARTIAL SECTION E-E
As constructed by others

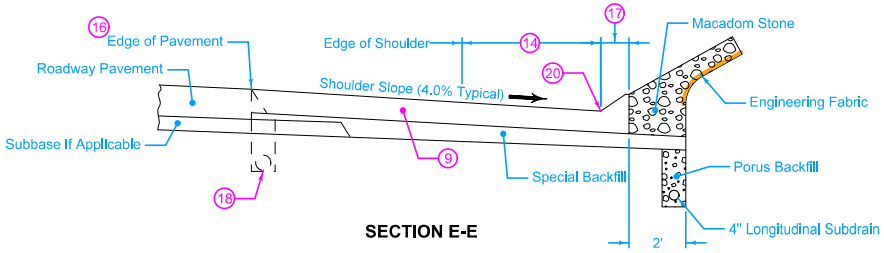

SECTION E-E

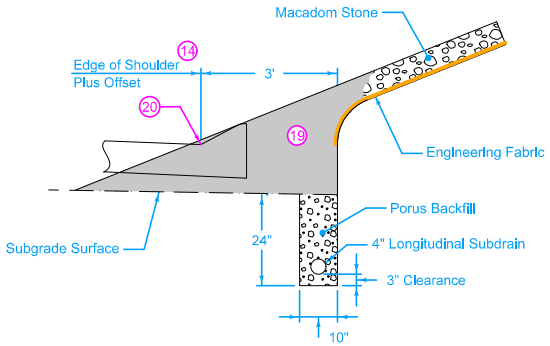

PARTIAL SECTION E-E
Proposed construction

9 See typical cross-sections for details of paved shoulder.

14 5' offset unless otherwise noted on the Bridge Situation Plan. 4' offset minimum.

16 If roadway pavement is newly-constructed PCC, use BT-1 or BT-2 joint. If roadway pavement is existing PCC, use BT-3, BT-4, or BT-5 joint. Refer to PV-101 joint details.

17 6" sloped curb. Refer to PV-102 curb details.

18 Roadway subdrain location. Use caution when excavating. Maintain porus material in trench to bottom of roadway pavement.

19 Remove and stockpile macadam stone. Carefully seperate the macadam stone from the surrounding soil. Preserve the integrity of the engineering fabric.

20 Toe of the berm. Refer to A Points on the berm slope location table.

Iowa Department of Transportation

STANDARD ROAD PLAN

REVISION	
2	04-17-12

EW-204

SHEET 4 of 5

REVISIONS: Modified the temporary grading surface in Section C-C.

Deanna Maifield
APPROVED BY DESIGN METHODS ENGINEER

BRIDGE BERM GRADING WITH RECOVERABLE SLOPE (BARNROOF SECTION)

This image can be viewed in 3D on the the ERL or at our website http://www.iowadot.gov/design/stdrdpln.htm

This image can be viewed in 3D on the the ERL or at our website http://www.iowadot.gov/design/stdrdpln.htm

Iowa Department of Transportation

STANDARD ROAD PLAN

REVISION	
2	04-17-12

EW-204

SHEET 5 of 5

REVISIONS: Modified the temporary grading surface in Section C-C.

Deanna Maifield

APPROVED BY DESIGN METHODS ENGINEER

BRIDGE BERM GRADING WITH RECOVERABLE SLOPE (BARNROOF SECTION)

SECTION

Miscellaneous

MI

NO.	DATE	TITLE
		Fencing
MI-101	04-20-10	Fencing Layout
MI-102	10-18-11	Chain Link Fence Construction
MI-103	04-20-10	Field Fence Construction
MI-104	10-18-11	Deer Fence Construction
		Sidewalks and Driveways
MI-210	04-17-12	PCC Driveways and Alleys
MI-220	04-17-12	Detectable Warnings and Pedestrian Ramp
MI-221	04-17-12	Combined Retaining Wall - Sidewalk

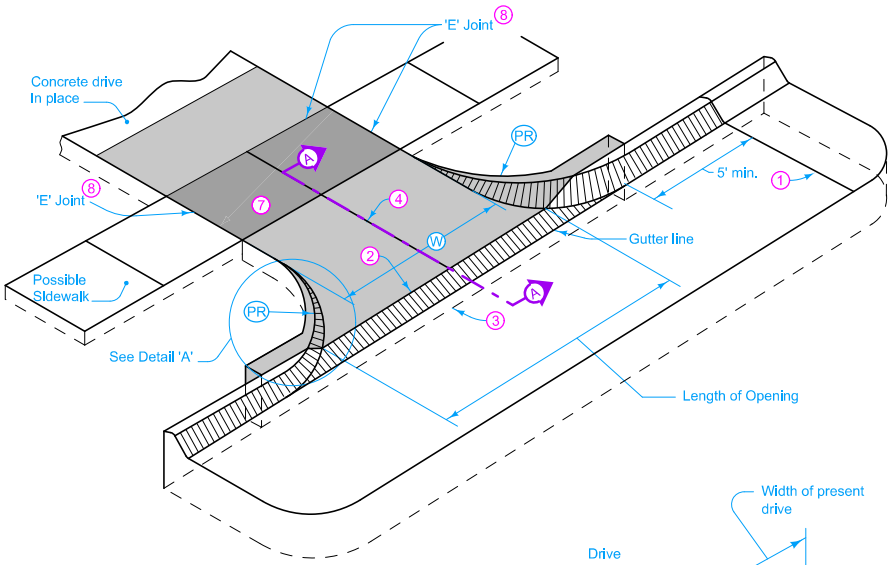

CASE 1 ENTRANCE

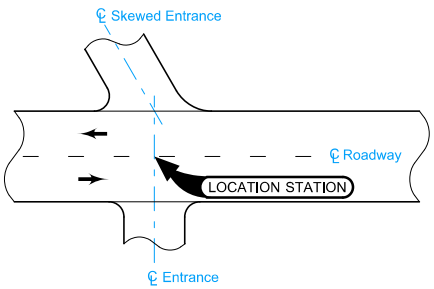

ENTRANCE LOCATION

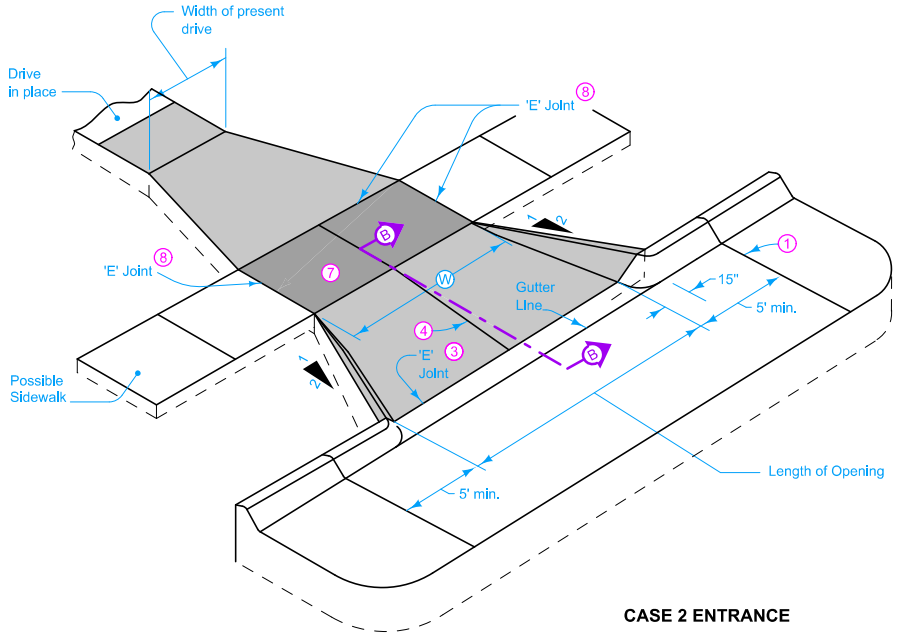

CASE 2 ENTRANCE

Special details for entrances other than Cases 1 and 2 are included in the detail plans. The shape and surface of driveways and alleys will vary to fit individual conditions.

Use unreinforced concrete pavement mix with a minimum thickness of 6 inches, unless specified otherwise for driveways and alleys. If an alley drains toward the roadway, use a 2 inch inverted crown; otherwise, use flat surface for driveway pavement.

W is measured at the street side of sidewalk. If sidewalk is not present, W is to be measured at the end of the returns for Case 1 and 10 feet back of curb for Case 2.

1. Transverse Pavement Joints as per detail Project Plans.
2. 'K' Pavement Joint (Refer to **PV-101**) from end of radius to end of radius.
3. Line at the Back of Curb.
4. 'C' Joint on Centerline.
7. Refer to contract documents for sidewalk construction if the entrance is designed to accomodate sidewalk. Construct sidewalk using the same thickness as the driveway.
8. If the sidewalk is in place at the time of construction, place 'E' Joint along the front edge of the sidewalk. If the sidewalk is reconstructed with the driveway entrance, place 'E' Joint along the back edge of the sidewalk and a 'C' Joint sawed or formed along the front edge of the sidewalk. Refer to **PV-101** for joint details.

Possible Contract Items:
- Driveway, P.C. Concrete
- Driveway, Reinforced P.C. Concrete
- Removal of Paved Driveway
- Sidewalk, P.C. Concrete

Possible Tabulation:
102-3

Iowa Department of Transportation

REVISION	
4	04-17-12

STANDARD ROAD PLAN

MI-210

SHEET 1 of 2

REVISIONS: Removed 6 in. from Sidewalk, P.C. Concrete bid item and modified circle note 7 to allow thickness to match drive.

Deanna Maifeld
APPROVED BY DESIGN METHODS ENGINEER

PCC DRIVEWAYS AND ALLEYS

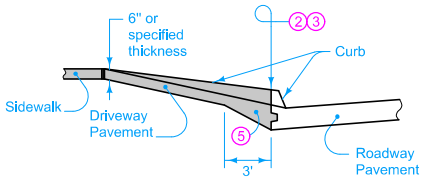

SECTION A-A
(Case 1 Entrance)

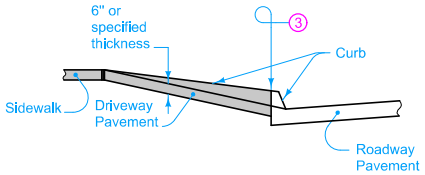

SECTION B-B
(Cases 2 Entrance)

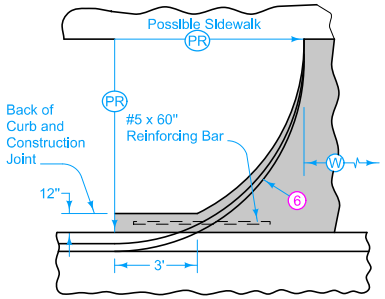

DETAIL 'A'
CASE 1 ENTRANCE

2 'K' Pavement Joint (Refer to PV-101) from end of radius to end of radius.

3 Line at the Back of Curb.

5 Taper to Pavement Thickness.

6 Lip curb varies from either $4\frac{1}{2}$ inch or 3 inch at back of curb to 0 inch at front of sidewalk.

9 Refer to Tabulation 102-3.

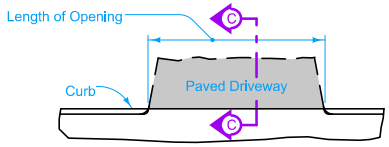

PLAN

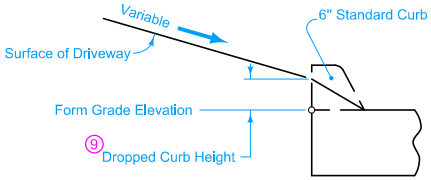

SECTION C-C
(Standard Curb)

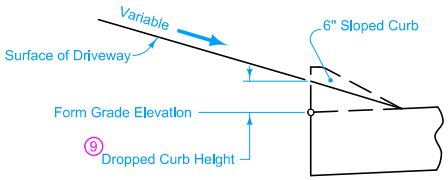

SECTION C-C
(Sloped Curb)

DROPPED CURB

Iowa Department of Transportation

REVISION	
4	04-17-12

STANDARD ROAD PLAN

MI-210

SHEET 2 of 2

REVISIONS: Removed 6 in. from Sidewalk, P.C. Concrete bid item and modified circle note 7 to allow thickness to match drive.

Deanna Maifeld
APPROVED BY DESIGN METHODS ENGINEER

PCC DRIVEWAYS AND ALLEYS

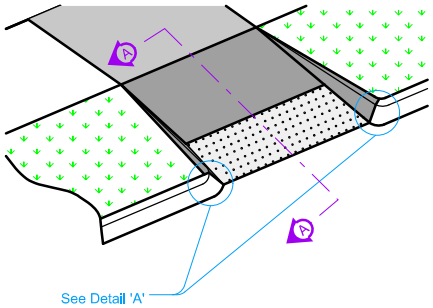

CURB RAMP PERPENDICULAR TO CURB

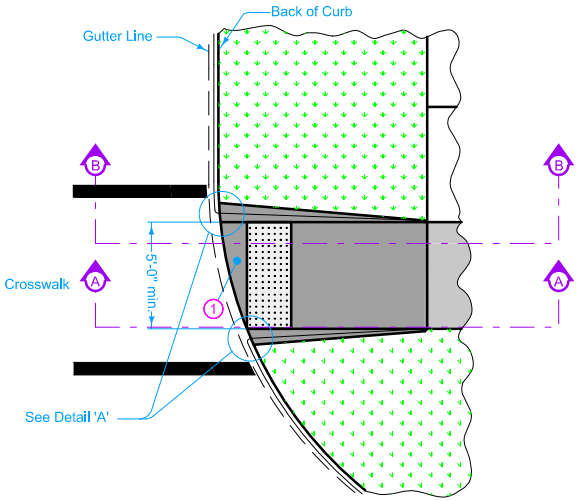

CURB RAMP NOT PERPENDICULAR TO CURB

1. Unless curb ramp is aligned perpendicular to the street radius, provide an area of special shaping at the bottom of the ramp. This area allows the grade break at the bottom of the ramp to be perpendicular to the ramp and provides a smooth transition to gutterline for wheelchair access.

2. Use vertical curb adjacent to ramp unless flares are specified in the project plans. Install Detectable Warnings so that no gap is left between warning panel and base of curb.

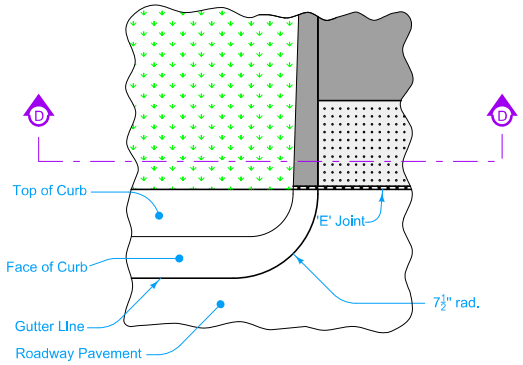

DETAIL 'A'

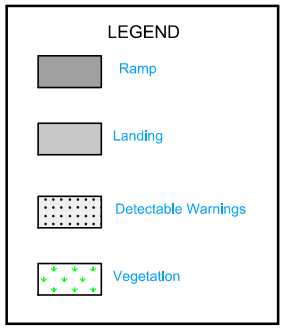

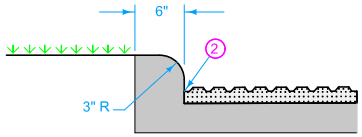

SECTION D-D

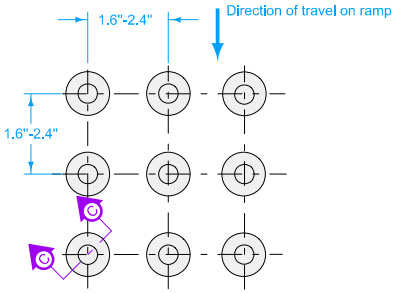

SQUARE PATTERN
(Parallel alignment)

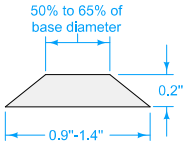

SECTION C-C

DOME DETAILS ON DETECTABLE WARNINGS

Possible Contract Items:
- Detectable Warnings
- Sidewalk, P.C. Concrete, 6 in.
- Sidewalk, P.C. Concrete, 4 in.
- Removal of Sidewalk

Possible Tabulation:
- 113-1

Iowa Department of Transportation

REVISION	
4	04-17-12

STANDARD ROAD PLAN

MI-220

SHEET 1 of 3

REVISIONS: Modified location of Detail 'B', added Section D-D and changed title.

Deanna Maifield
APPROVED BY DESIGN METHODS ENGINEER

DETECTABLE WARNINGS AND PEDESTRIAN RAMP

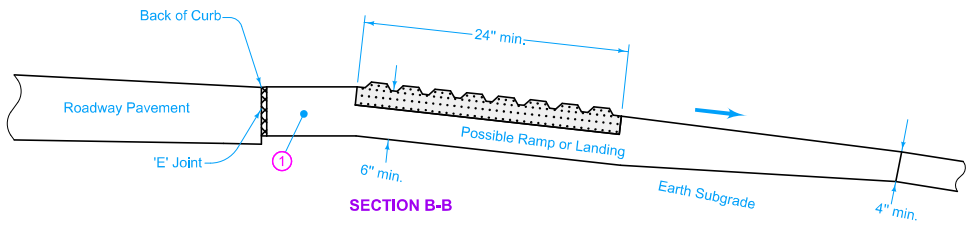

SECTION B-B

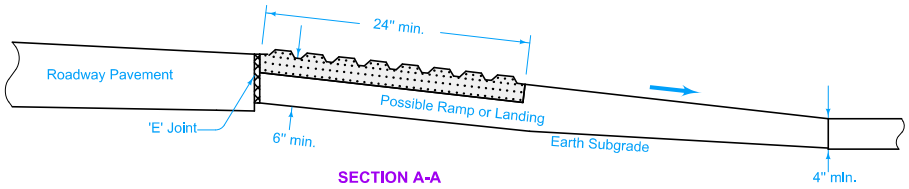

SECTION A-A

TYPICAL INSTALLATION DETECTABLE WARNING
WITH NON CURBED ROADWAY

1 Unless curb ramp is aligned perpendicular to the street radius, provide an area of special shaping at the bottom of the ramp. This area allows the grade break at the bottom of the ramp to be perpendicular to the ramp and provides a smooth transition to gutterline for wheelchair access.

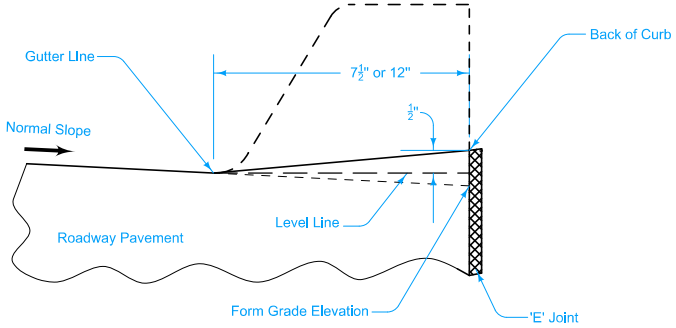

DETAIL 'B'

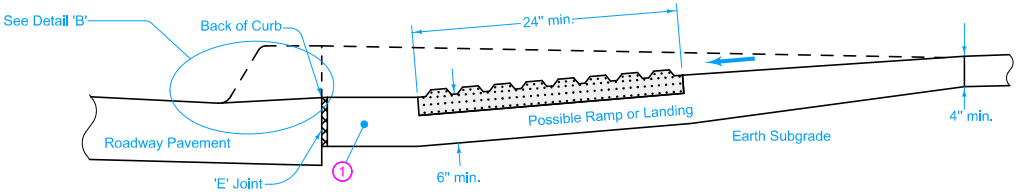

SECTION B-B

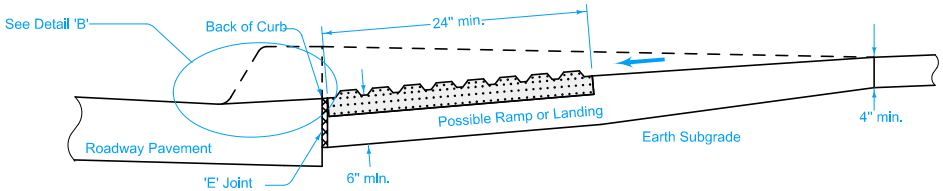

SECTION A-A

TYPICAL INSTALLATION DETECTABLE WARNING
WITH CURBED ROADWAY

LEGEND

- Ramp
- Landing
- Detectable Warnings
- Vegetation

Iowa Department of Transportation

STANDARD ROAD PLAN

REVISION	
4	04-17-12

MI-220

SHEET 2 of 3

REVISIONS: Modified location of Detail 'B', added Section D-D and changed title.

Deanna Maifield
APPROVED BY DESIGN METHODS ENGINEER

DETECTABLE WARNINGS
AND PEDESTRIAN RAMP

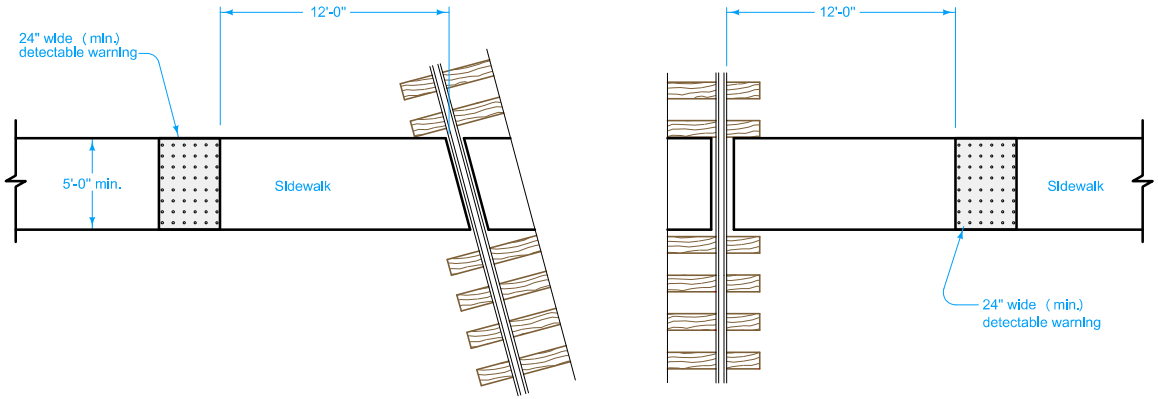

RAILROAD CROSSING

LEGEND

- Ramp
- Landing
- Detectable Warnings
- Vegetation

Iowa Department of Transportation

STANDARD ROAD PLAN

REVISION	
4	04-17-12

MI-220

SHEET 3 of 3

REVISIONS: Modified location of Detail 'B', added Section D-D and changed title.

Deanna Maifield
APPROVED BY DESIGN METHODS ENGINEER

DETECTABLE WARNINGS AND PEDESTRIAN RAMP

Provide a minimum concrete cover to near reinforcement of 1 1/2 inches. Provide 3 inches minimum cover at the ends of bars.

(1) Top bar parallel to top of wall. Lap 6 inch minimum as necessary. Tie securely.

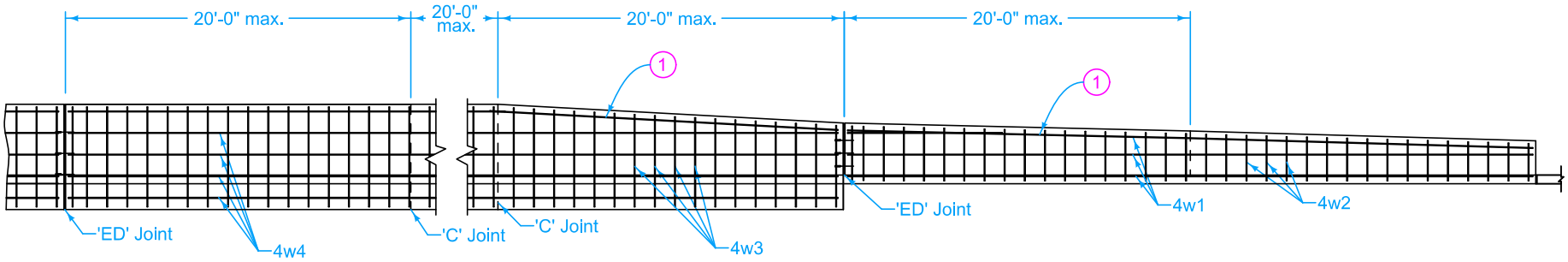

TYPE B WALL

TYPE A WALL

TYPICAL LONGITUDINAL SECTION OF RETAINING WALL

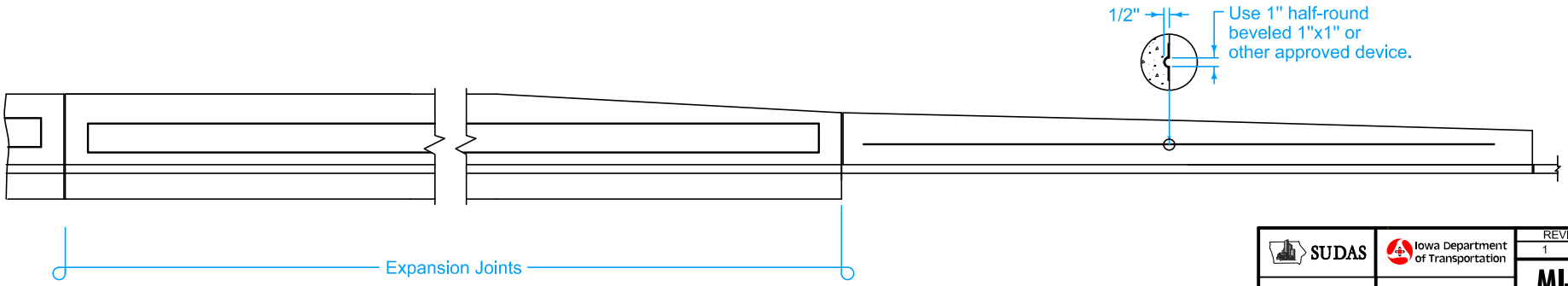

TYPICAL RUSTICATION DETAIL

SUDAS	Iowa Department of Transportation	REVISION 1 04-17-12
FIGURE 9072.221	STANDARD ROAD PLAN	MI-221 SHEET 1 OF 2

REVISIONS: Changed figure number to 9070.221. Added "or flatter" to clarify slope labels.

Paul D. Wiegand — SUDAS DIRECTOR
Deanna Maifield — DESIGN METHODS ENGINEER

COMBINED RETAINING WALL - SIDEWALK

FIGURE 9072.221 | SHEET 1 OF 2

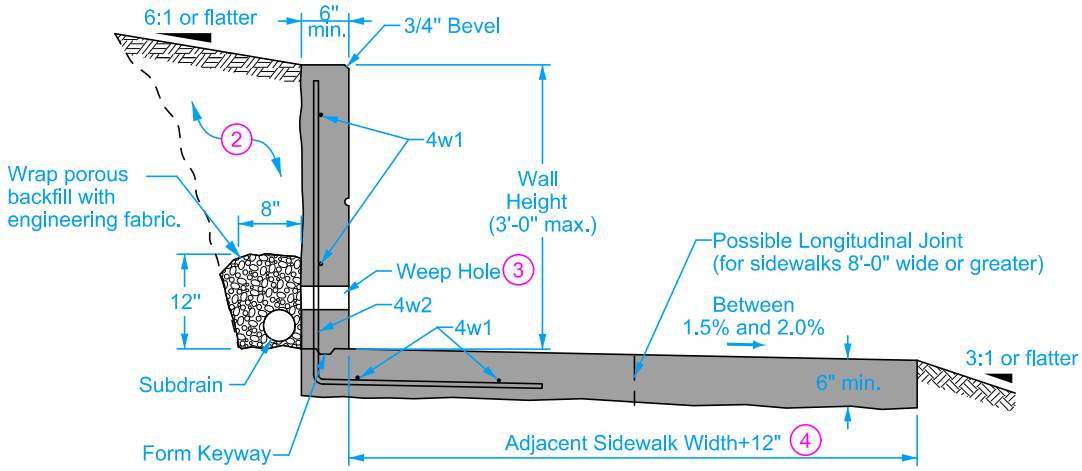

TYPE A WALL TYPICAL SECTION

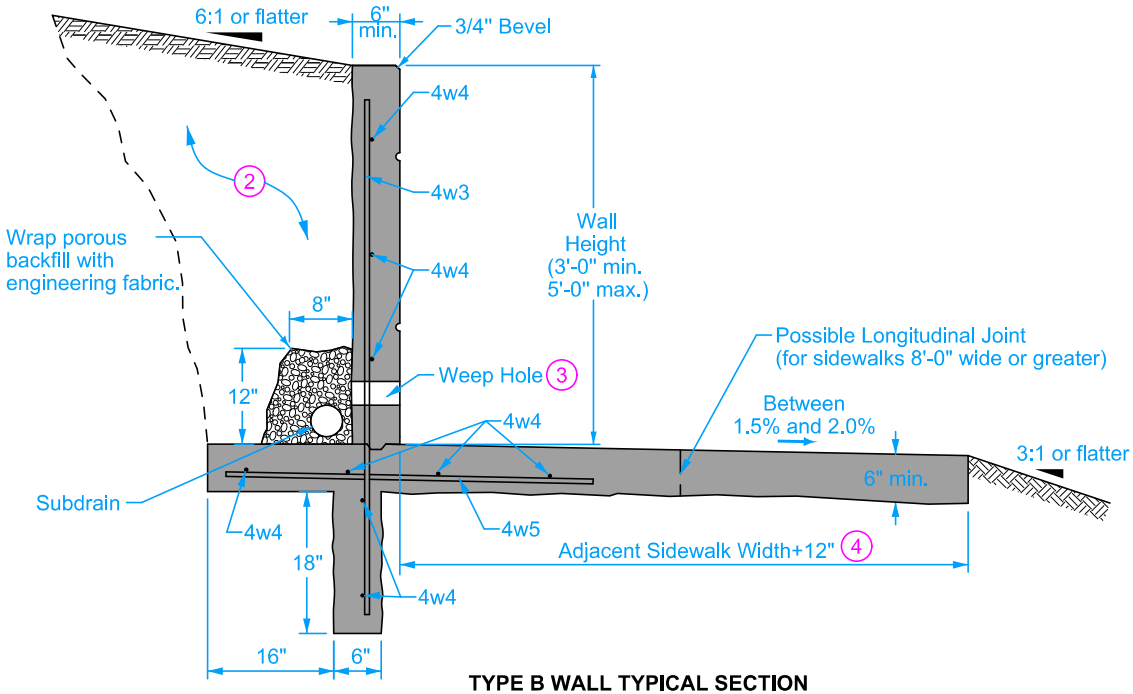

TYPE B WALL TYPICAL SECTION

Provide a minimum concrete cover to near reinforcement of 1 1/2 inches. Provide 3 inches minimum cover at the ends of bars.

2 Excavate and place backfill material as necessary.

3 Provide 3 inch diameter weep holes at 8 foot intervals. Install rodent guards in weep holes. Align bottom of weep hole with top of subdrain.

4 Additional 12 inch width is adjacent to wall.

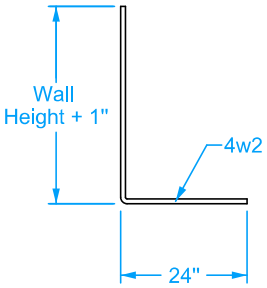

BENT BARS

REINFORCING BAR LIST

Wall Type	Mark	Size	Shape	Length	Spacing
Type A	4w1	4	———	Variable	15"
	4w2	4	L	Variable	14"
Type B	4w3	4	—	Wall Height + 18"	14"
	4w4	4	—	Variable	15"
	4w5	4	—	3'-10"	14"

SUDAS | Iowa Department of Transportation | REVISION 1 04-17-12

FIGURE 9072.221 | STANDARD ROAD PLAN | MI-221 | SHEET 2 OF 2

REVISIONS: Changed figure number to 9070.221. Added "or flatter" to clarify slope labels.

Paul D. Wiegand, SUDAS DIRECTOR | Deanna Maifield, DESIGN METHODS ENGINEER

COMBINED RETAINING WALL - SIDEWALK

FIGURE 9072.221 | SHEET 2 OF 2

SECTION

Pavement Markings

PM

NO.	DATE	TITLE
PM-110	04-19-11	Line Types
PM-111	10-18-11	Symbols and Legends
PM-120	04-19-11	Stop Lines and Islands
PM-210	10-18-11	Separation in Two-Lane Roadway
PM-211	10-18-11	Separation in Four-Lane Roadway
PM-220	04-17-12	Passing Lane
PM-221	04-17-12	Climbing Lane
PM-230	04-17-12	Transition at Abrupt Changes in Pavement Width
PM-240	04-19-11	Railroad Crossing on Two-Lane Roadway
PM-242	04-19-11	Railroad Crossing on Four-Lane Roadway
PM-310	04-19-11	Entrance and Exit Ramps
PM-420	04-19-11	Two-Lane Roadway with no Turn Lanes (One-Way Stop Condition)
PM-520	04-19-11	Two-Lane Roadway with no Turn Lanes (Two-Way Stop Condition)
PM-521	04-19-11	Two-Lane Roadway with Right Turn Lanes
PM-522	04-19-11	Two-Lane Roadway with Left Turn Lanes
PM-550	04-19-11	Two-Lane Roadway with Two-Way Left Turn Lane
PM-560	04-19-11	Divided Multi-Lane Roadway with no Turn Lanes
PM-561	04-19-11	Divided Multi-Lane Roadway with Right Turn Lanes
PM-562	04-19-11	Divided Multi-Lane Roadway with Left Turn Lanes
PM-620	04-19-11	Two-Lane Roadway with no Turn Lanes (Four-Way Stop Condition)
PM-650	04-19-11	Multi-Lane Roadway with Two-Way Left Turn Lane
PM-760	04-19-11	Divided Multi-Lane Roadway Median

For line information, see PM-110.

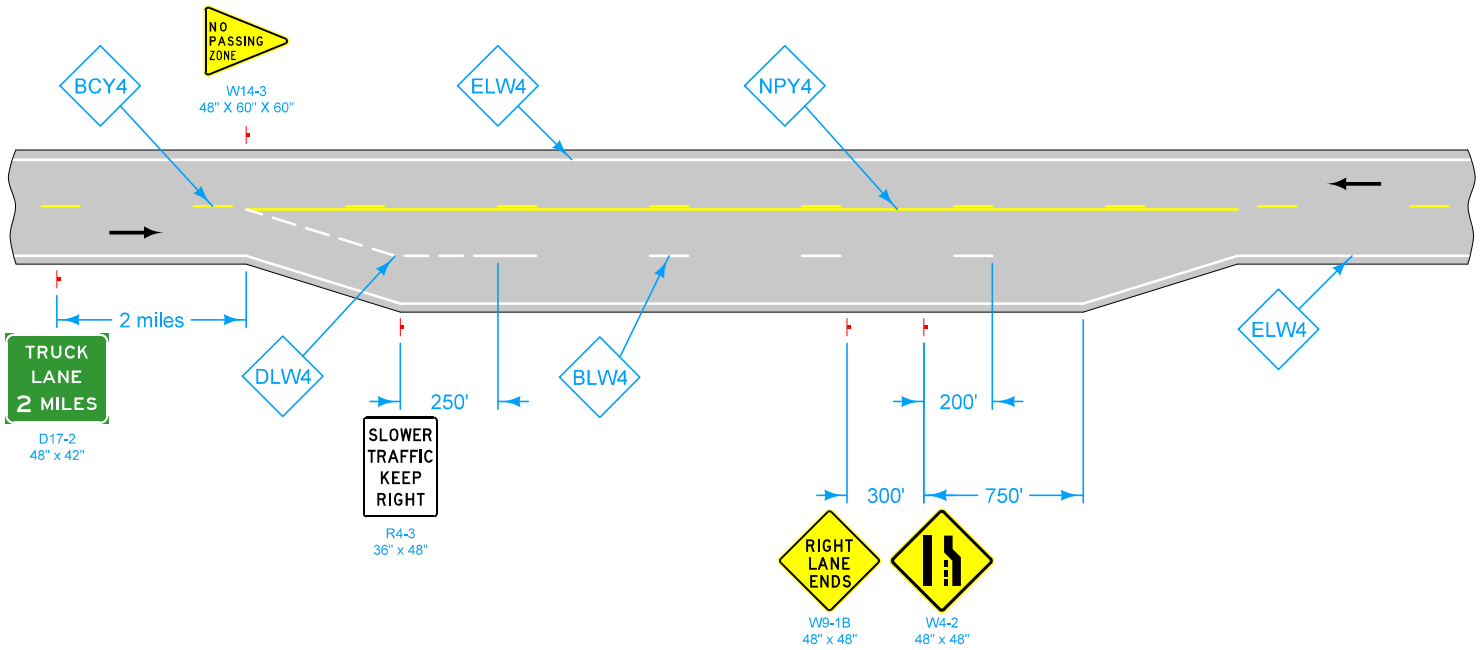

Possible Contract Item:
Pavement Marking Line Items
Type 'A' Signs

Possible Tabulation:
108-22

LEGEND

←	Direction of Traffic	ELW4	Edge Line Right (White)
BCY4	Broken Centerline (Yellow)	DLW4	Dotted Line (White)
BLW4	Broken Lane Line (White)	NPY4	No Passing Zone Line (Yellow)

Iowa Department of Transportation

STANDARD ROAD PLAN

REVISION	
New	04-17-12

PM-220

SHEET 1 of 1

REVISIONS: New. Layout from Traffic Safety Manual.

Deanna Maifield
APPROVED BY DESIGN METHODS ENGINEER

PASSING LANE

For line information, see PM-110.

(1) If distance X is less than 3000 feet, omit last R4-3 sign. If distance X is greater than 5250 feet, place R4-3 signs at 2250 foot intervals.

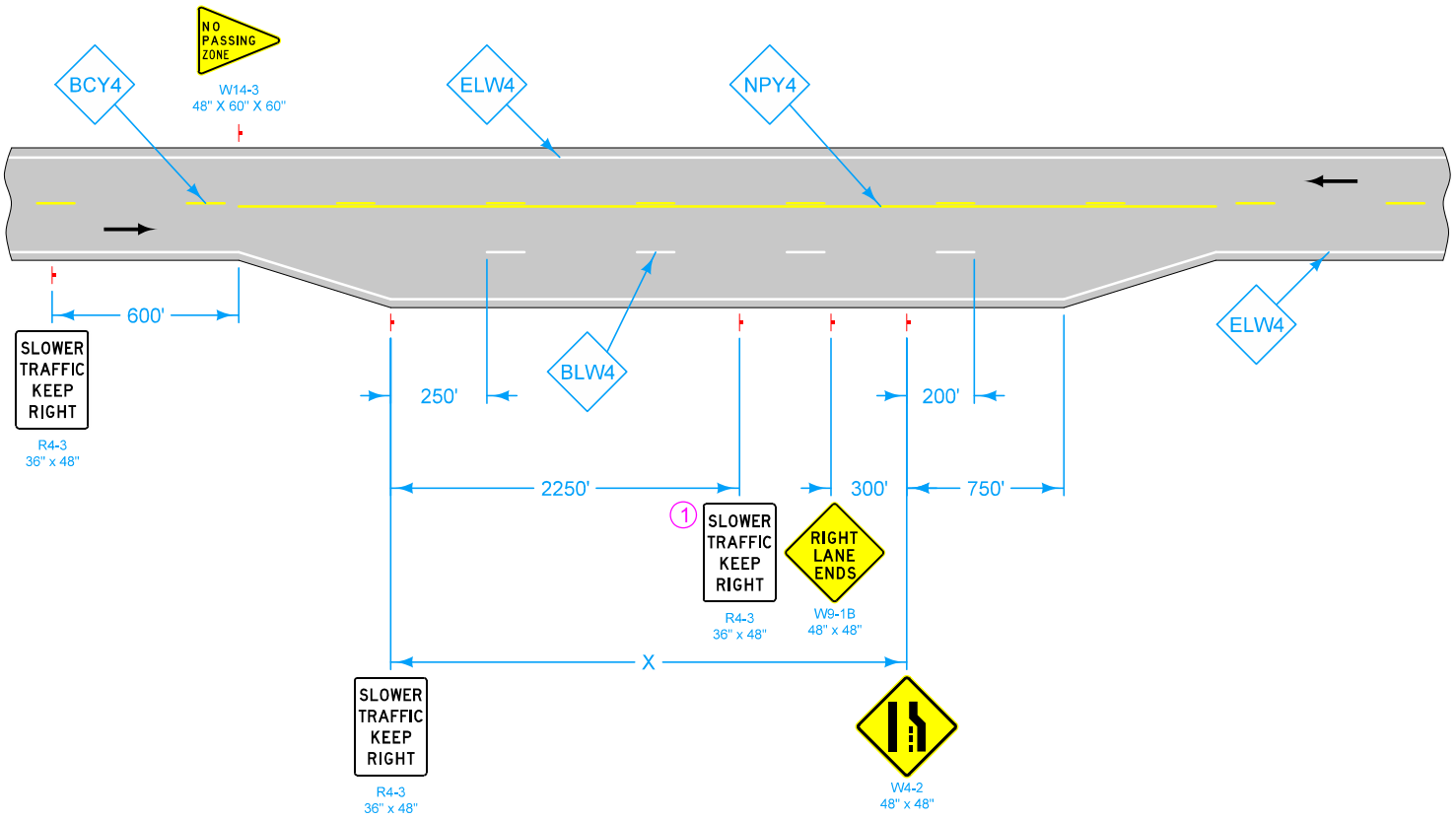

LEGEND

←	Direction of Traffic	ELW4	Edge Line Right (White)
BCY4	Broken Centerline (Yellow)	NPY4	No Passing Zone Line (Yellow)
BLW4	Broken Lane Line (White)		

Possible Contract Item:
Pavement Marking Line Items
Type 'A' Signs

Possible Tabulation:
108-22

Iowa Department of Transportation

STANDARD ROAD PLAN

REVISION	
New	04-17-12

PM-221

SHEET 1 of 1

REVISIONS: New. Layout from Traffic Safety Manual.

Deanna Maifield
APPROVED BY DESIGN METHODS ENGINEER

CLIMBING LANE

For line information, see PM-110.

On the approach to a narrower bridge or pavement section, place edge lines on a diagonal from a point 300 feet from the bridge to the gutter line of the bridge.

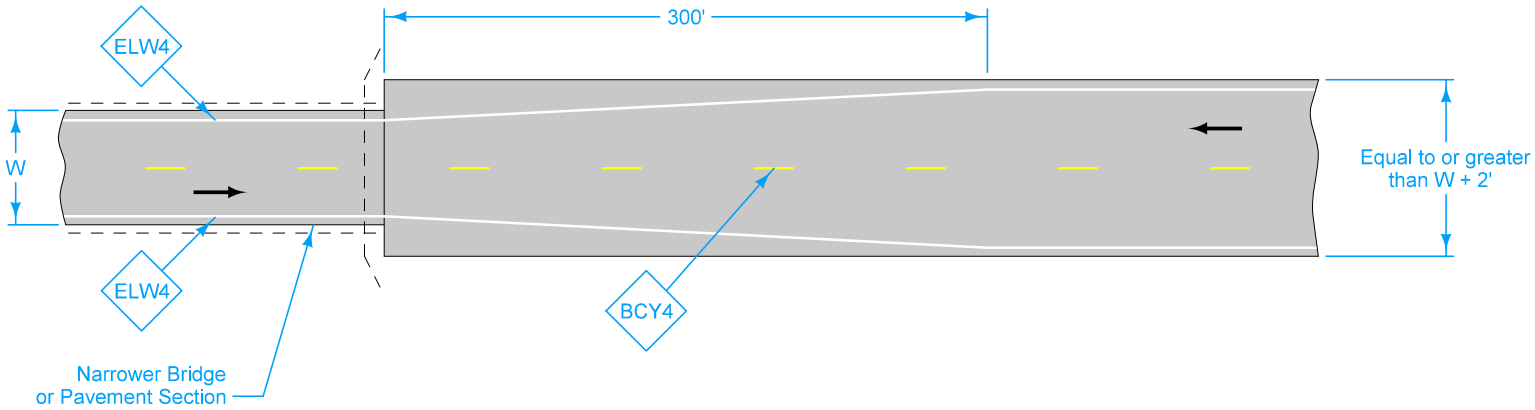

Possible Contract Item:
Pavement Marking Line Items

Possible Tabulation:
108-22

LEGEND

←	Direction of Traffic
BCY4	Broken Centerline (Yellow)
ELW4	Edge Line Right (White)

Iowa Department of Transportation

STANDARD ROAD PLAN

REVISION	
New	04-17-12

PM-230

SHEET 1 of 1

REVISIONS: New.

Deanna Maifield
APPROVED BY DESIGN METHODS ENGINEER

TRANSITION AT ABRUPT CHANGES IN PAVEMENT WIDTH

SECTION

PV

Pavement

NO.	DATE	TITLE
		General
PV-1	Void	Replaced by PV-101
PV-2	Void	Replaced by PV-102 and PV-104
PV-3	10-18-11	Safety Edge
PV-10	04-19-11	Rumble Strip Panel for Intersection Approach
PV-11	04-20-10	Structural Rumble Strips
PV-12	04-17-12	Milled Shoulder Rumble Strips
PV-13	04-19-11	Milled Centerline Rumble Strips
		PCC
PV-101	04-17-12	Joints
PV-102	04-19-11	PCC Curb Details
PV-103	04-19-11	Manhole Boxouts in PCC Pavement
PV-104	04-19-11	Ramped Median Nose
		HMA
PV-201	04-19-11	Manhole Boxouts in HMA Pavement and HMA Overlays
		Superelevation
PV-301	04-19-11	Superelevation Details Two Lane Roadway
PV-302	04-17-12	Superelevation Details Four Lane Roadway Depressed Median
PV-303	04-19-11	Superelevation Details Ramps
PV-304	04-17-12	Superelevation Details Six Lane Roadway Depressed Median
PV-305	04-17-12	Superelevation Details Six Lane Roadway Closed Median
PV-306	04-19-11	Superelevation Details Eight Lane Roadway Closed Median
		Ramp Tapers
PV-410	10-18-11	Deceleration Taper for 16' Exit Ramp
PV-411	10-18-11	Acceleration Taper for 16' Entrance Ramp
PV-412	10-18-11	Deceleration Taper for 18' Exit Loop
PV-414	10-18-11	Acceleration Taper for 18' Entrance Loop

Pavement

NO.	DATE	TITLE
		Median Crossovers
PV-500	04-19-11	Median Crossover (50' Median)
PV-501	04-19-11	Median Crossover (50' Median) 16' Wide 1 Lane
PV-502	04-19-11	Median Crossover (50' Median) 28' Wide 2 Lane
PV-503	04-19-11	Median Crossover (64' Median)
PV-504	04-19-11	Median Crossover (64' Median) 16' Wide 1 Lane
PV-505	04-19-11	Median Crossover (64' Median) 28' Wide 2 Lane
PV-506	04-19-11	Median Crossover (68.24' Median)
PV-507	04-19-11	Median Crossover (68.24' Median) 16' Wide 1 Lane
PV-508	04-19-11	Median Crossover (68.24' Median) 28' Wide 2 Lane

DESIGNER INFO

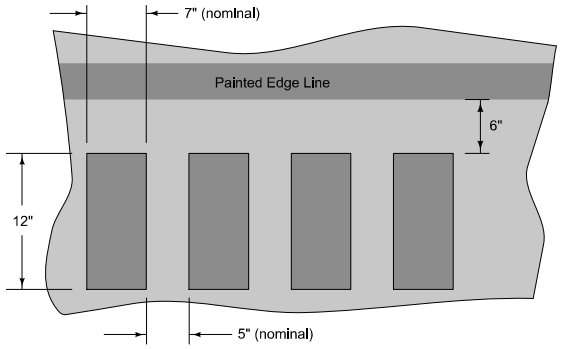

PLAN

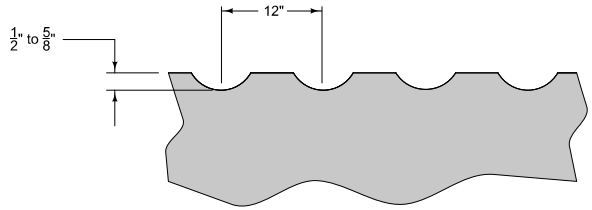

SECTION

MILLED RUMBLE STRIP

(1) Place continuous Milled Rumble Strips (no 12-foot gaps) on all median-side shoulders and on all interstate shoulders.

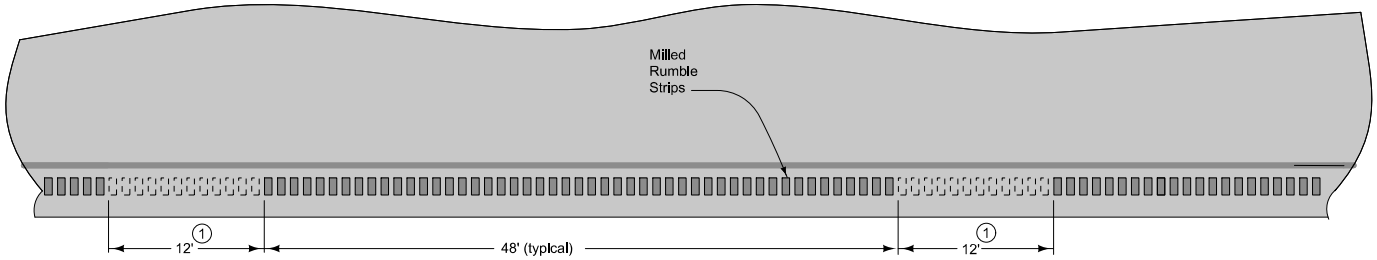

GAP DETAILS (1)

Possible Contract Items:
Asphalt Emulsion for Fog Seal (Shoulder Rumble Strips)
Milled Shoulder Rumble Strips, HMA Surface
Milled Shoulder Rumble Strips, PCC Surface

Possible Tabulation:
112-10

Iowa Department of Transportation

REVISION	
4	04-17-12

STANDARD ROAD PLAN

PV-12

SHEET 1 of 2

REVISIONS: Added drawing to sheet 2 to clarify procedure for gapping rumble strips for a pedestrian crossing.

Deanna Maifield
APPROVED BY DESIGN METHODS ENGINEER

MILLED SHOULDER RUMBLE STRIPS

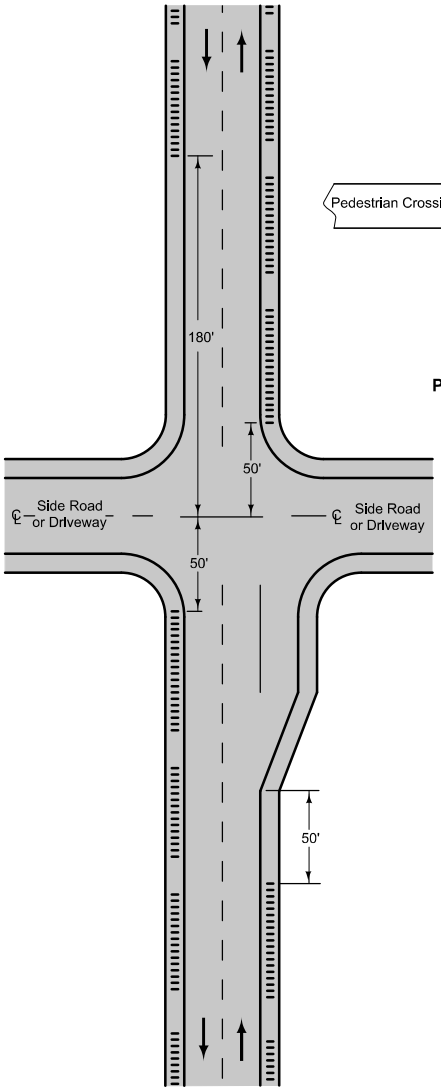

UNDIVIDED HIGHWAYS

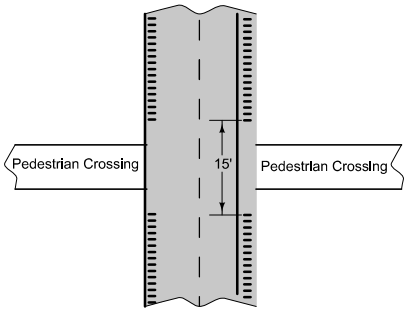

Pedestrian Crossing

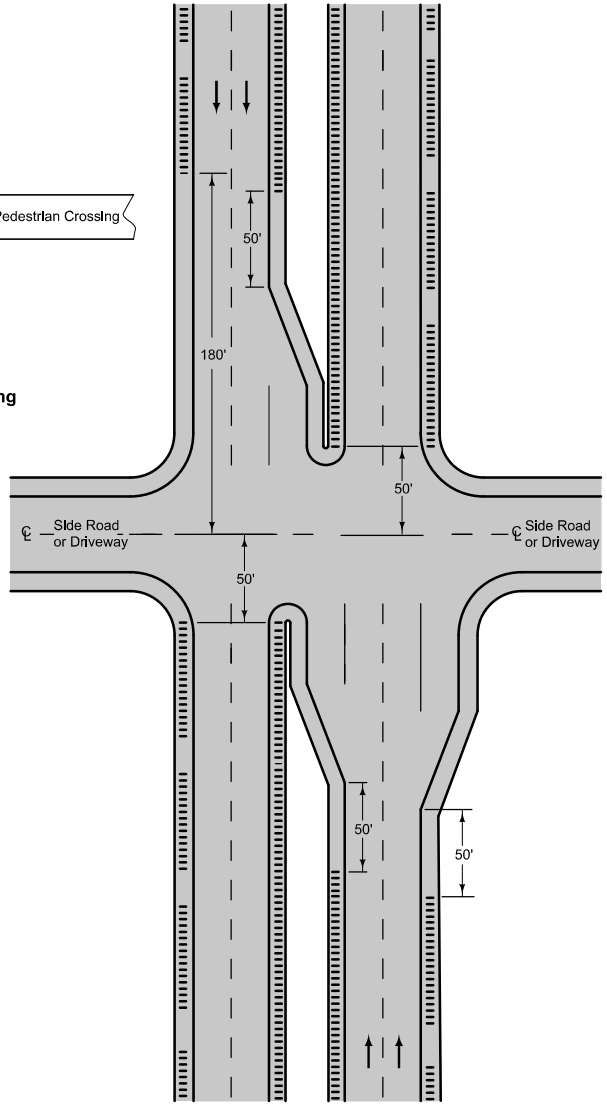

DIVIDED HIGHWAYS

INTERSECTION SITUATIONS

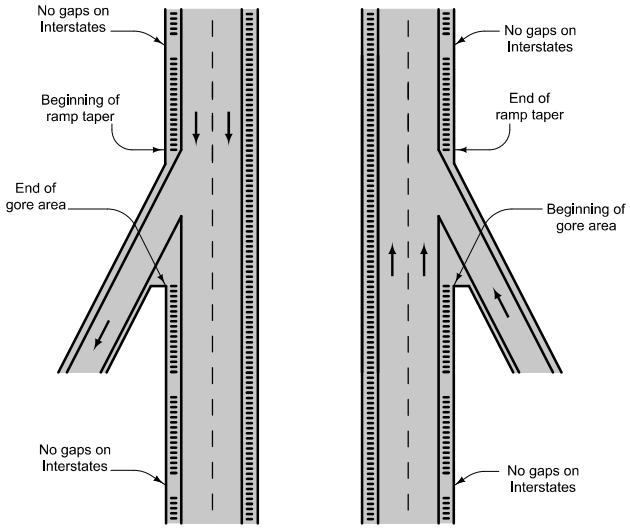

RAMP AND LOOP TERMINALS (1)

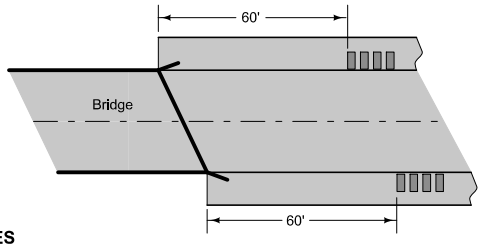

BRIDGES

(1) Place continuous Milled Rumble Strips (no 12-foot gaps) on all median-side shoulders and on all interstate shoulders.

Iowa Department of Transportation

STANDARD ROAD PLAN

REVISION	
4	04-17-12

PV-12

SHEET 2 of 2

REVISIONS: Added drawing to sheet 2 to clarify procedure for gapping rumble strips for a pedestrian crossing.

Deanna Maifield

APPROVED BY DESIGN METHODS ENGINEER

MILLED SHOULDER RUMBLE STRIPS

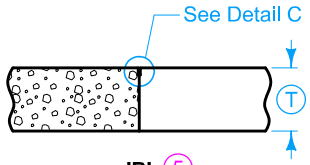

'B' (5)
PLAIN JOINT
(Abutting Pavement Slabs)

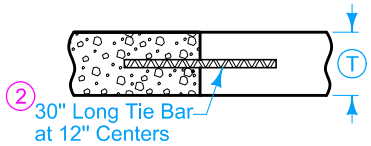

'DW' (3)(4)(7)
DAY'S WORK JOINT(Non-working)

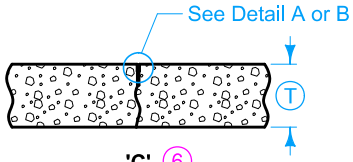

'C' (6)
CONTRACTION JOINT

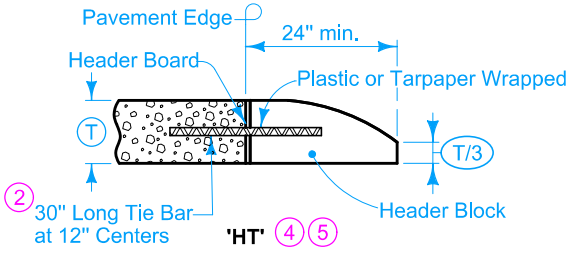

'HT' (4)(5)
HEADER JOINT
(End Rigid Pavement)

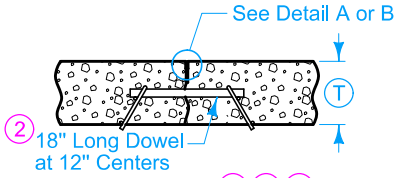

'CD' (1)(4)(6)
DOWELED CONTRACTION JOINT

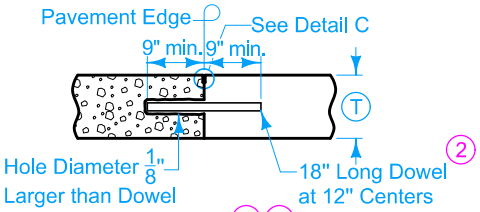

'RD' (4)(5)
ABUTTING PAVEMENT JOINT

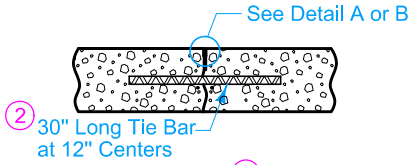

'CT' (4)
TIED CONTRACTION JOINT

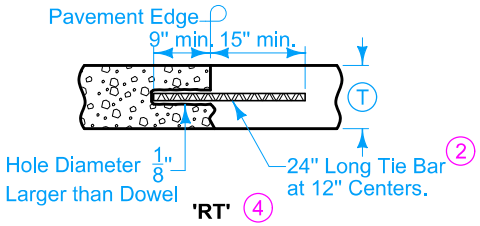

'RT' (4)
ABUTTING PAVEMENT JOINT
RIGID TIE

TRANSVERSE CONTRACTION

(1) See dowel assemblies for fabrication details.

(2) See Bar Size Table.

(3) Locate 'DW' joint at a mid-panel location between future 'C' or 'CD' joints. Place no closer than 5 feet to a 'C' or 'CD' joint.

(4) Place bars within the limits shown under dowel assemblies.

(5) Edge with 1/4 inch tool for length of joint indicated if formed; edging not required when cut with diamond blade saw. Remove header block and board when second slab is placed.

(6) Unless otherwise specified, use 'CD' transverse contraction joints in mainline pavement when (T) is greater or equal to 8 inches. Use 'C' joints when (T) is less than 8 inches.

(7) 'RT' joint may be used in lieu of 'DW' joint at the end of the days work. Remove any pavement damaged due to the drilling at no additional cost to the Contracting Authority.

SUDAS	Iowa Department of Transportation	REVISION 1 04-17-12
FIGURE 7010.101	STANDARD ROAD PLAN	PV-101 SHEET 1 of 8

REVISIONS: Added new note 26. Added placement limits drawings on sheet 8.

Paul D. Wiegand — SUDAS DIRECTOR
Deanna Maifield — DESIGN METHODS ENGINEER

JOINTS

FIGURE 7010.101 SHEET 1 OF 8

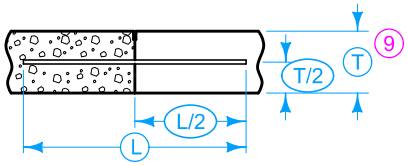

BAR PLACEMENT
(Applies to all joints unless otherwise detailed.)

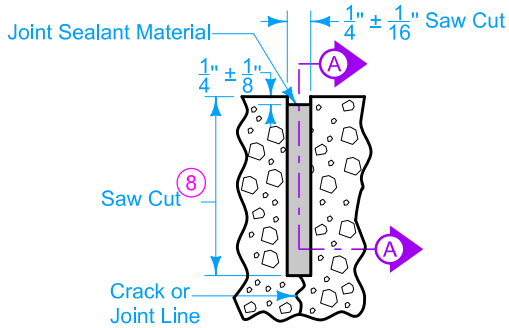

DETAIL A
(Saw cut formed by conventional concrete sawing equipment.)

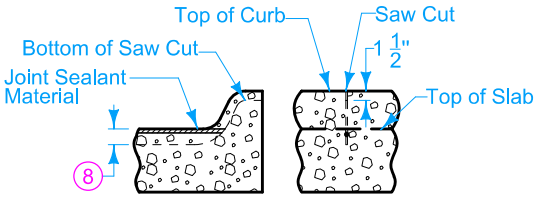

'C' JOINT IN CURB
(Match 'CT', 'CD', or 'C' joint in pavement.)

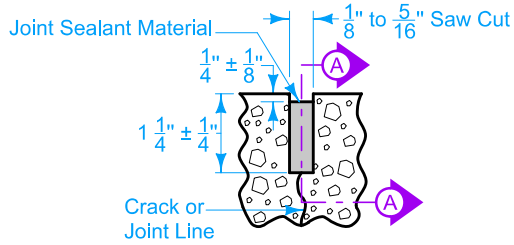

DETAIL B
(Saw cut formed by approved early concrete sawing equipment.)

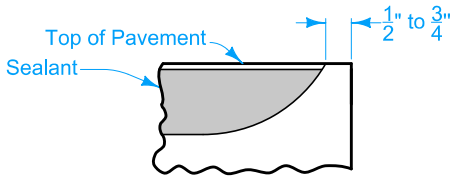

SECTION A-A
(Detail at Edge of Pavement)

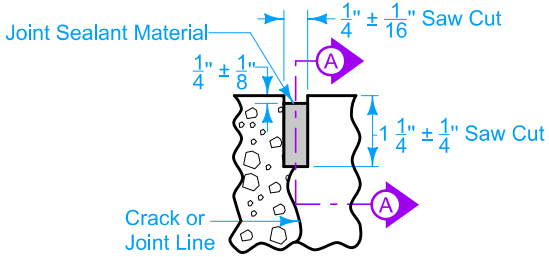

DETAIL C

TRANSVERSE CONTRACTION

8 Saw 'CD' joint to a depth of T/3 ± 1/4"; saw 'C' joint to a depth of T/4 ± 1/4".

9 When tying into old pavement, T represents the depth of sound PCC.

BAR SIZE TABLE		
T	Dowel Diameter	Tie Bar Size
< 8"	3/4"	#6
≥ 8" but < 10"	1 1/4"	#10
≥ 10"	1 1/2"	#11

SUDAS | Iowa Department of Transportation | REVISION 1 04-17-12

FIGURE 7010.101 | STANDARD ROAD PLAN | PV-101

SHEET 2 of 8

REVISIONS: Added new note 26. Added placement limits drawings on sheet 8.

Paul D. Wiegand, SUDAS DIRECTOR | Deanna Maifield, DESIGN METHODS ENGINEER

JOINTS

FIGURE 7010.101 SHEET 2 OF 8

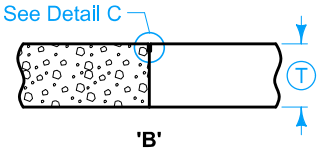

'B'
PLAIN JOINT
(Abutting Pavement Slabs)

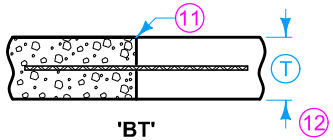

'BT'
ABUTTING PAVEMENT JOINT - RIGID TIE

T	Joint	Bars	Bar Length and Spacing
< 8"	'BT-1'	#4	36" Long at 30" Centers
≥ 8"	'BT-2'	#5	36" Long at 30" Centers

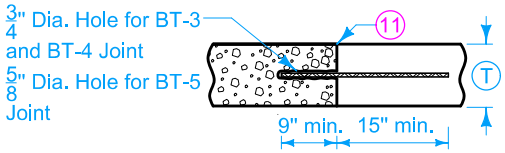

'BT'
ABUTTING PAVEMENT JOINT - RIGID TIE (Drilled)

T	Joint	Bars	Bar Length and Spacing
< 8"	'BT-5'	#4	24" Long at 30" Centers
≥ 8"	'BT-3'	#5	24" Long at 30" Centers
	'BT-4'		24" Long at 15" Centers

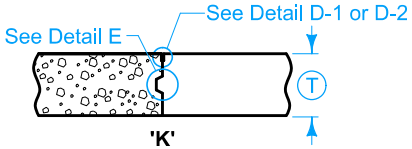

'K'
KEYED JOINT FOR ADJACENT SLABS
(Where T is 8" or more)

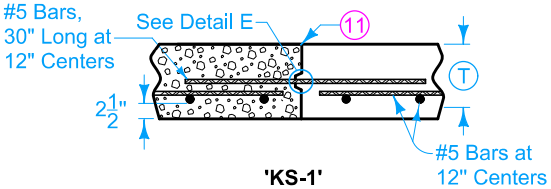

'KS-1'
[Single Reinforced Pavement (Bridge Approach)]

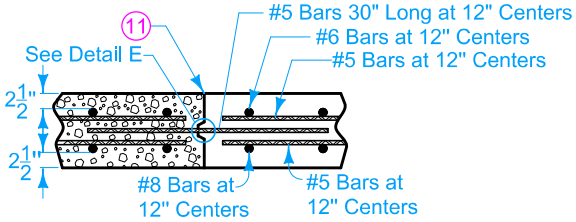

'KS-2'
[Double Reinforced Pavement (Bridge Approach)]

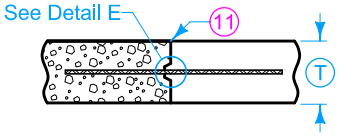

'KT' 10 12
ABUTTING PAVEMENT JOINT - KEYWAY TIE

T	Joint	Bars	Bar Length and Spacing
< 8"	'KT-1'	#4	30" Long at 30" Centers
≥ 8"	'KT-2'	#5	30" Long at 30" Centers
	'KT-3'		30" Long at 15" Centers

LONGITUDINAL CONTRACTION

10 Bar supports may be necessary for fixed form paving to ensure the bar remains in a horizontal position in the plastic concrete.

11 Sawing or sealing of joint not required.

12 The following joints are interchangeable, subject to the pouring sequence:
'BT-1', 'L-1', and 'KT-1'
'KT-2' and 'L-2'
'KT-3' and 'L-3'

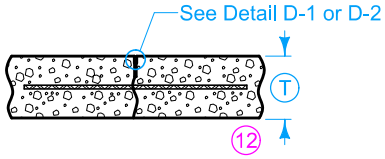

'L'
CONTRACTION JOINT

T	Joint	Bars	Bar Length and Spacing
< 8"	'L-1'	#4	36" Long at 30" Centers
≥ 8"	'L-2'	#5	36" Long at 30" Centers
	'L-3'		36" Long at 15" Centers

SUDAS | Iowa Department of Transportation | REVISION 1 04-17-12
FIGURE 7010.101 | STANDARD ROAD PLAN | PV-101
SHEET 3 of 8
REVISIONS: Added new note 26. Added placement limits drawings on sheet 8.
SUDAS DIRECTOR | DESIGN METHODS ENGINEER

JOINTS

FIGURE 7010.101 | SHEET 3 OF 8

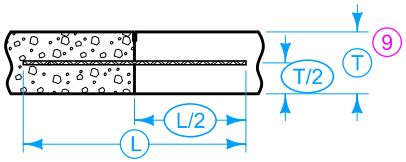

TIE BAR PLACEMENT
(Applies to all joints unless otherwise detailed.)

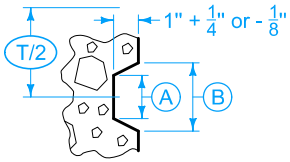

DETAIL E

KEYWAY DIMENSIONS			
Keyway Type	Pavement Thickness (T)	(A)	(B)
Standard	8" or greater	$1\frac{3}{4}$"	$2\frac{3}{4}$"
Narrow	Less than 8"	1"	2"

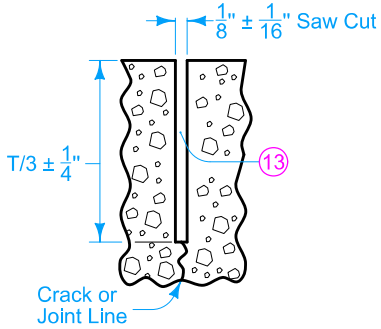

DETAIL D-1
(Required when the Department of Transportation is the Contracting Authority, or when specified in the contract documents.)

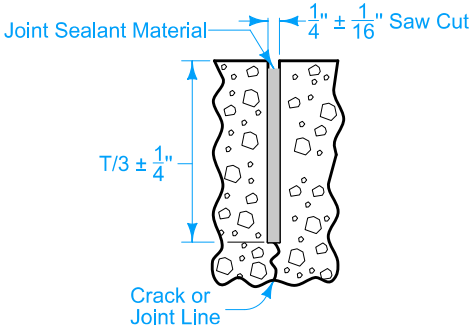

DETAIL D-2
(Required when the Department of Transportation is not the Contracting Authority, or when specified in the contract documents)

9 When tying into old pavement, (T) represents the depth of sound PCC.

13 Sealant or cleaning not required.

LONGITUDINAL CONTRACTION

FIGURE 7010.101

SHEET 4 OF 8

SUDAS	Iowa Department of Transportation	REVISION 1 04-17-12
FIGURE 7010.101	STANDARD ROAD PLAN	PV-101 SHEET 4 of 8

REVISIONS: Added new note 26. Added placement limits drawings on sheet 8.

SUDAS DIRECTOR — DESIGN METHODS ENGINEER

JOINTS

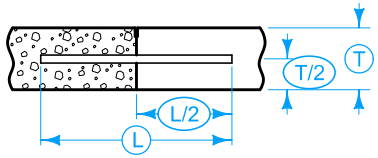

DOWEL PLACEMENT
(Applies to all joints unless otherwise detailed.)

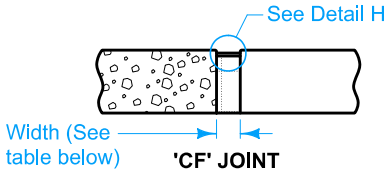

'CF' JOINT

TYPE	WIDTH
CF-1	2"
CF-2	$2\frac{1}{2}$"
CF-3	3"
CF-4	$3\frac{1}{2}$"

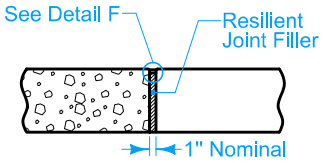

'E'
1" EXPANSION JOINT

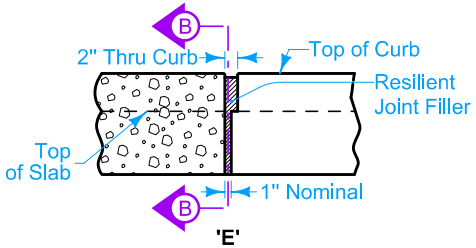

'E'
JOINT IN CURB
(View at Back of Curb)

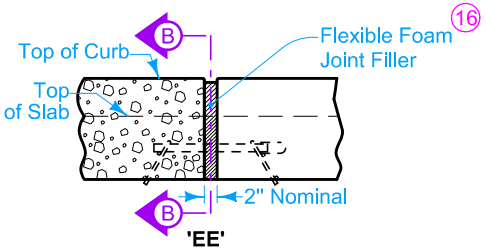

'EE'
JOINT IN CURB
(View at Back of Curb)

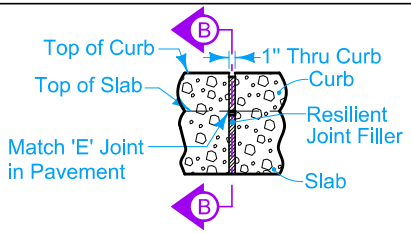

'ES'
JOINT IN CURB
(View at Back of Curb)

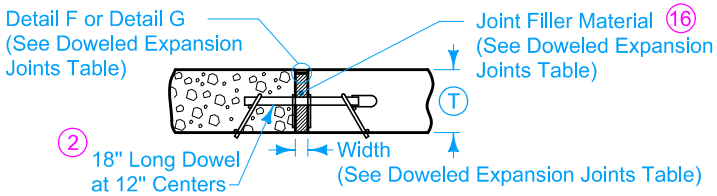

'ED', 'EE', 'EF' 15
DOWELED EXPANSION JOINT

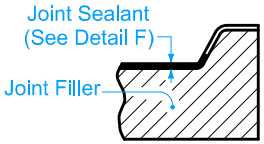

SECTION B-B

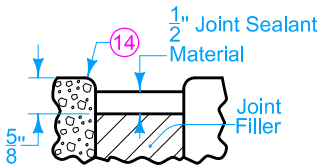

DETAIL F

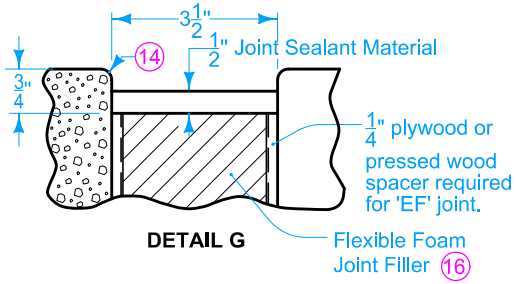

DETAIL G

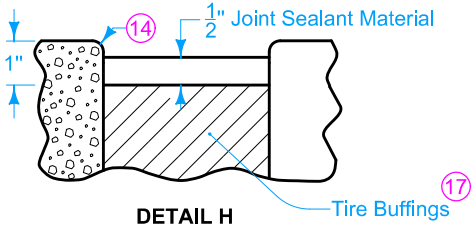

DETAIL H

EXPANSION

2 See Bar Size Table.

14 Edge with 1/4 inch tool for length of joint indicated if formed; edging not required when cut with diamond blade saw.

15 See Dowel Assemblies for fabrication details and placement limits. Coat the free end of dowel bar to prevent bond with pavement. At intake locations, dowel bars may be cast-in-place.

16 Predrill or preform holes in joint material for appropriate dowel size.

17 Compact tire buffings by spading with a square-nose shovel.

DOWELED EXPANSION JOINTS		
TYPE	WIDTH	FILLER MATERIAL 16
ED	1"	Resilient (Detail F)
EE	2"	Flexible Foam (Detail F)
EF	$3\frac{1}{2}$"	Flexible Foam (Detail G)

BAR SIZE TABLE			
T	< 8"	≥ 8" but < 10"	≥ 10"
Dowel Diameter	$\frac{3}{4}$"	$1\frac{1}{4}$"	$1\frac{1}{2}$"

SUDAS | Iowa Department of Transportation | REVISION 1 04-17-12

FIGURE 7010.101 | STANDARD ROAD PLAN | **PV-101** | SHEET 5 of 8

REVISIONS: Added new note 26. Added placement limits drawings on sheet 8.

Paul D. Wiegand, SUDAS DIRECTOR | Deanna Maifield, DESIGN METHODS ENGINEER

JOINTS

FIGURE 7010.101 SHEET 5 OF 8

CONTRACTION JOINTS

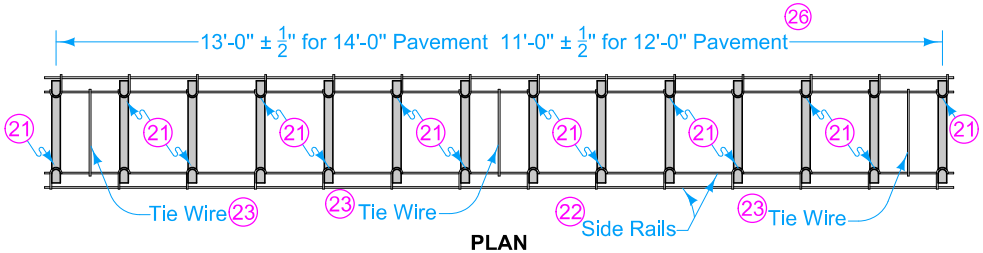

PLAN

Spaces between dowel bars are nominal dimensions with a $\frac{1}{4}$" allowable tolerance.

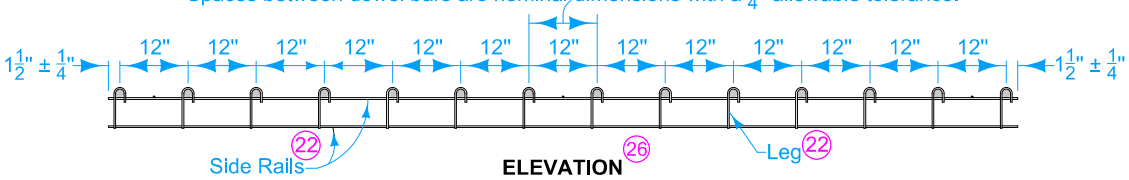

ELEVATION

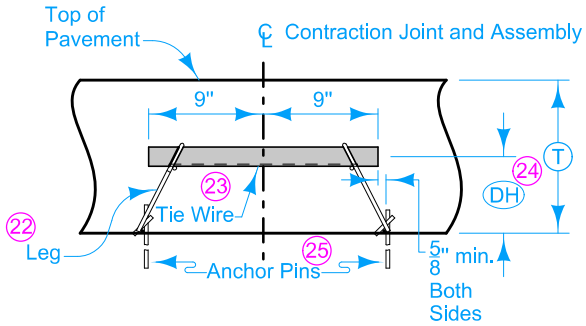

LONGITUDINAL SECTION

DOWEL ASSEMBLIES (18) (19) (20)

DOWEL HEIGHT AND DIAMETER		
(T)	(DH) (24)	Diameter
7" to $7\frac{1}{2}$"	$3\frac{1}{2}$"	$\frac{3}{4}$"
8" to $9\frac{1}{2}$"	$4\frac{1}{4}$"	$1\frac{1}{4}$"
10" to $11\frac{1}{2}$"	$5\frac{1}{4}$"	$1\frac{1}{2}$"
12" to 13"	$6\frac{1}{4}$"	$1\frac{1}{2}$"

(18) Use 18 inch long dowel bars with a tolerance of ± 1/8 inch. Ensure the centerlines of individual dowels are parallel to the other dowels in the assembly within ± 1/8 inch.

(19) Wire sizes shown are the minimum required. Use wires with a minimum tensile strength of 50 ksi.

(20) Details apply to both transverse contraction and expansion joints.

(21) Weld alternately throughout.

(22) #1/0 gauge (0.306 inch diameter) wire.

(23) #10 gauge (0.135 inch diameter) wire, welded or friction fit to upper side rail, both sides.

(24) Measured from the centerline of dowel bar to bottom of lower side rail + 1/4 inch.

(25) Per lane width, install a minimum of 8 anchor pins evenly spaced (4 per side), to prevent movement of assembly during construction. Anchor assemblies placed on pavement or PCC base with devices approved by the Engineer.

(26) If dowel basket assemblies are required for curbed pavements, the assembly length is based on the jointing layout. See PV-101, sheet 8.

SUDAS | Iowa Department of Transportation

REVISION 1 04-17-12

FIGURE 7010.101 | STANDARD ROAD PLAN | PV-101

SHEET 6 of 8

REVISIONS: Added new note 26. Added placement limits drawings on sheet 8.

Paul D. Wiegand, SUDAS DIRECTOR | Deanna Maifeld, DESIGN METHODS ENGINEER

JOINTS

FIGURE 7010.101 | SHEET 6 OF 8

EXPANSION JOINTS

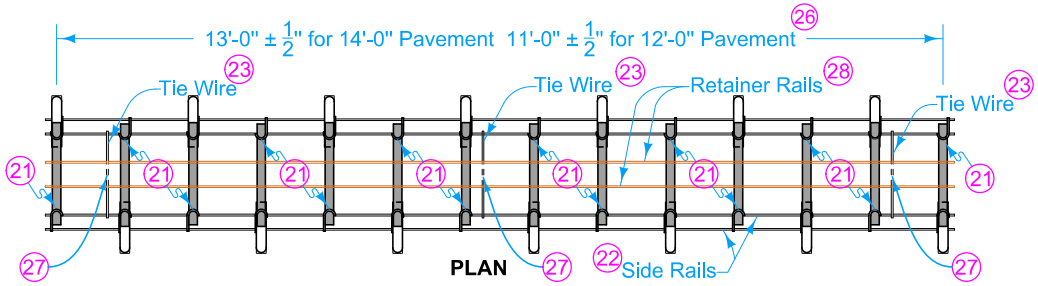

PLAN

Spaces between dowel bars are nominal dimensions with a 1/4" allowable tolerance.

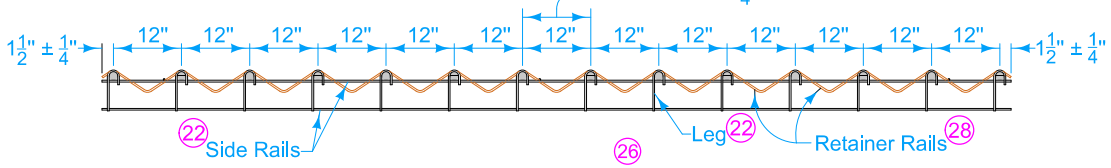

ELEVATION

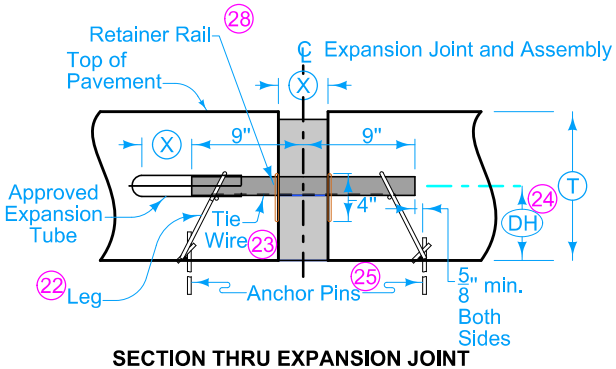

SECTION THRU EXPANSION JOINT

JOINT OPENING AND EXPANSION TUBE EXTENSION		
Joint Type	X	Minimum Tube Length
"ED"	1"	6"
"EE"	2"	7"
"EF"	3 1/2"	9"

DOWEL HEIGHT AND DIAMETER		
T	DH 24	Diameter
7" to 7 1/2"	3 1/2"	3/4"
8" to 9 1/2"	4 1/4"	1 1/4"
10" to 11 1/2"	5 1/4"	1 1/2"
12" to 13"	6 1/4"	1 1/2"

DOWEL ASSEMBLIES 18 19 20

18 Use 18 inch long dowel bars with a tolerance of ± 1/8 inch. Ensure the centerlines of individual dowels are parallel to the other dowels in the assembly within ± 1/8 inch.

19 Wire sizes shown are the minimum required. Use wires with a minimum tensile strength of 50 ksi.

20 Details apply to both transverse contraction and expansion joints.

21 Weld alternately throughout.

22 #1/0 gauge (0.306 inch diameter) wire.

23 #10 gauge (0.135 inch diameter) wire, welded or friction fit to upper side rail, both sides.

24 Measured from the centerline of dowel bar to bottom of lower side rail + 1/4 inch.

25 Per lane width, install a minimum of 8 anchor pins evenly spaced (4 per side), to prevent movement of assembly during construction. Anchor assemblies placed on pavement or PCC base with devices approved by the Engineer.

26 If dowel basket assemblies are required for curbed pavements, the assembly length is based on the jointing layout. See PV-101, sheet 8.

27 Clip and remove center portion of tie during field assembly.

28 1/4 inch diameter wire.

SUDAS | Iowa Department of Transportation | REVISION 1 04-17-12

FIGURE 7010.101 | STANDARD ROAD PLAN | PV-101 | SHEET 7 of 8

REVISIONS: Added new note 26. Added placement limits drawings on sheet 8.

Paul D. Wiegand, SUDAS DIRECTOR | Deanna Maifeld, DESIGN METHODS ENGINEER

JOINTS

FIGURE 7010.101 | SHEET 7 OF 8

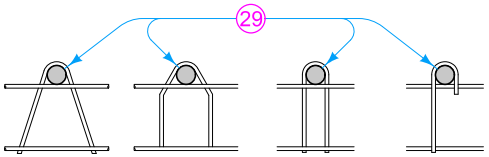

OPTIONAL LEG SHAPES

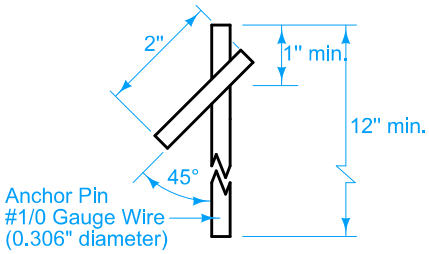

ANCHOR PIN

18 Use 18 inch long dowel bars with a tolerance of ± 1/8 inch. Ensure the centerlines of individual dowels are parallel to the other dowels in the assembly within ± 1/8 inch.

19 Wire sizes shown are the minimum required. Use wires with a minimum tensile strength of 50 ksi.

20 Details apply to both transverse contraction and expansion joints.

29 Diameter of bend around dowel is dowel diameter + 1/8 to 3/16 inches.

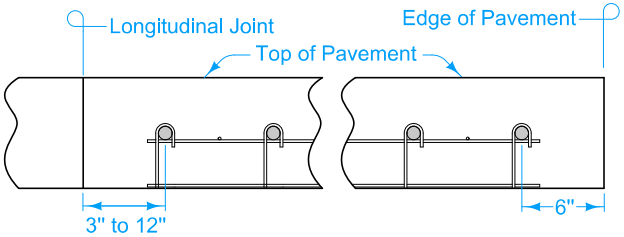

PLACEMENT LIMITS
(Rural Section)

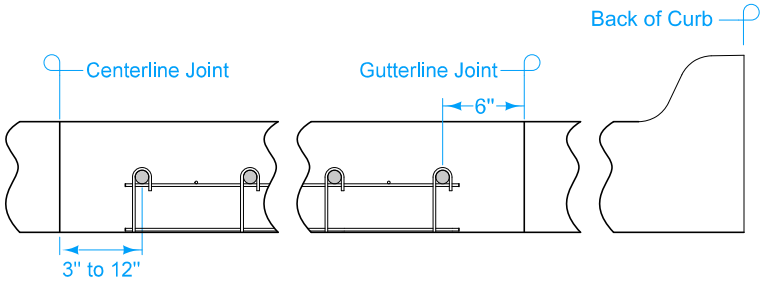

PLACEMENT LIMITS
(Curb and Gutter - Gutterline Jointing)

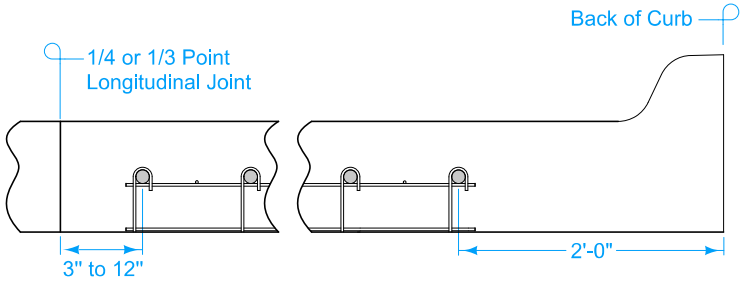

PLACEMENT LIMITS
(Curb and Gutter - 1/4 or 1/3 Point Jointing)

DOWEL ASSEMBLIES 18 19 20

FIGURE 7010.101 | SHEET 8 OF 8

SUDAS	Iowa Department of Transportation	REVISION 1 04-17-12
FIGURE 7010.101	STANDARD ROAD PLAN	PV-101 SHEET 8 of 8

REVISIONS: Added new note 26. Added placement limits drawings on sheet 8.

SUDAS DIRECTOR — DESIGN METHODS ENGINEER

JOINTS

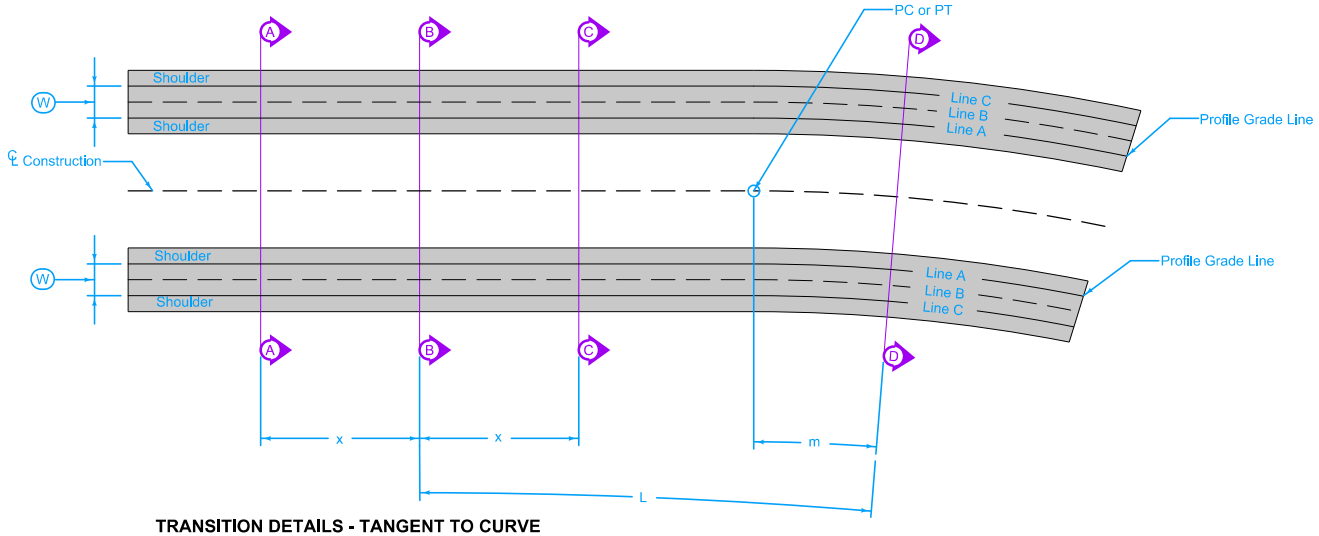

TRANSITION DETAILS - TANGENT TO CURVE

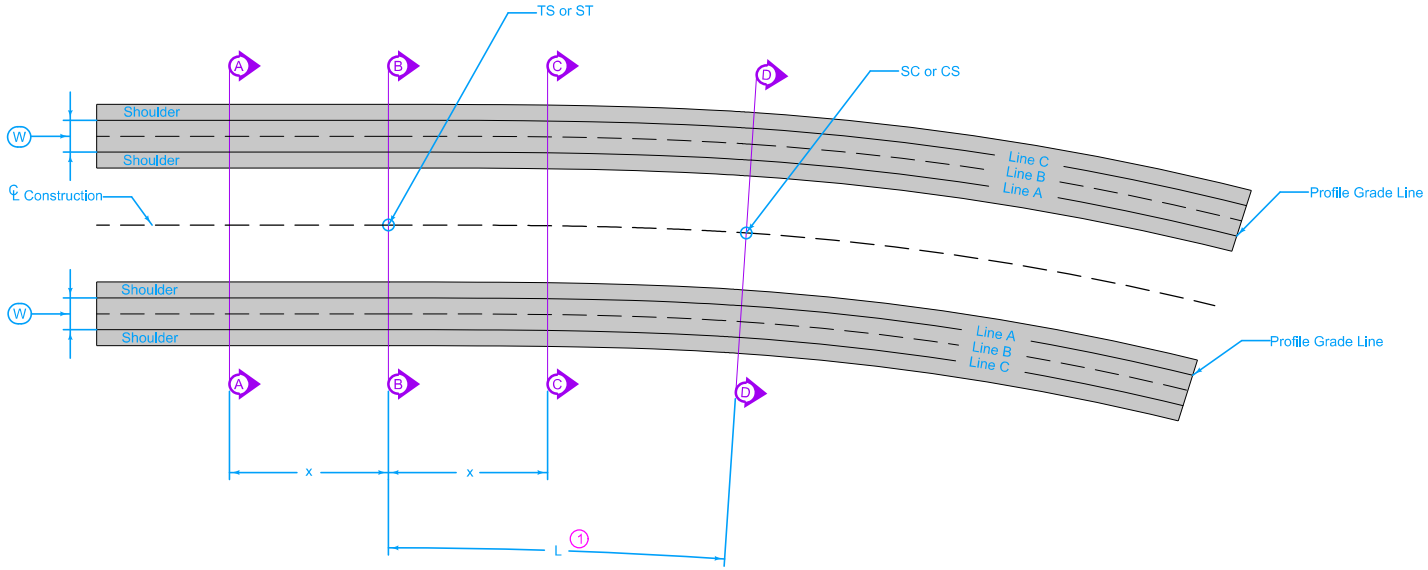

TRANSITION DETAILS - SPIRAL CURVE

Refer to specific curve data contained in project plans for tangent runout length (x), runoff length (L) and full superelevation (e).

When spiral curve transitions are not required:
Place 70% of full superelevation at the PC and PT
Place 30% of the runoff length within the curve.

Unless otherwise specified, all lengths are measured along the centerline of construction.

Superelevations on this standard are shown for curves to the right. Curves to the left are a mirror image of what is shown.

Smooth curves should be established at the time of construction at sections A-D along the profile edges of lines A-C.

Axis of rotation coincides with profile grade location.

m = 30% of Runoff Length (L)

W = 24' Regardless of Pavement Width

g = Normal Cross Slope (2%)

L = Distance to Change Cross Slope from 0% to e

e = Supereleavtion Rate

x = Distance to Change Cross Slope from 0% to 2%

s = Normal Shoulder Slope

1 Spiral curve length coincides with runoff length (L)

Possible Tabulation:
101-18

Iowa Department of Transportation

REVISION	
2	04-17-12

STANDARD ROAD PLAN

PV-302

SHEET 1 of 3

REVISIONS: Added Possible Tabulation.

Deanna Maifield
APPROVED BY DESIGN METHODS ENGINEER

SUPERELEVATION DETAILS
FOUR LANE ROADWAY
DEPRESSED MEDIAN

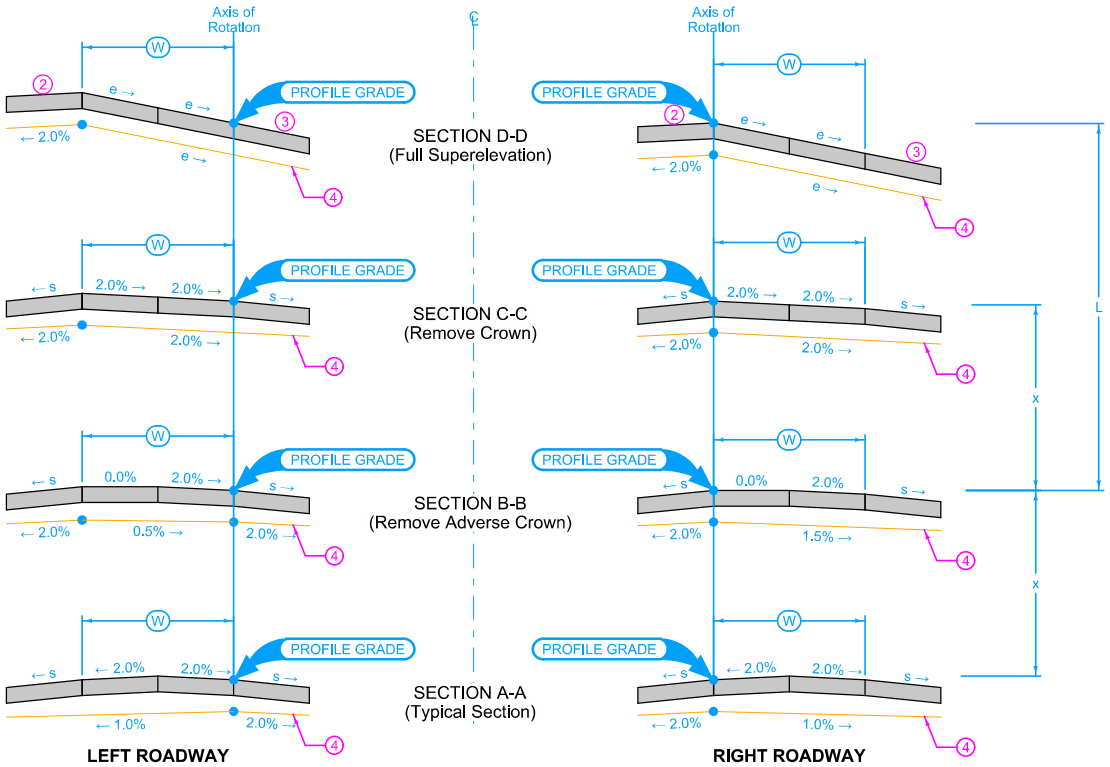

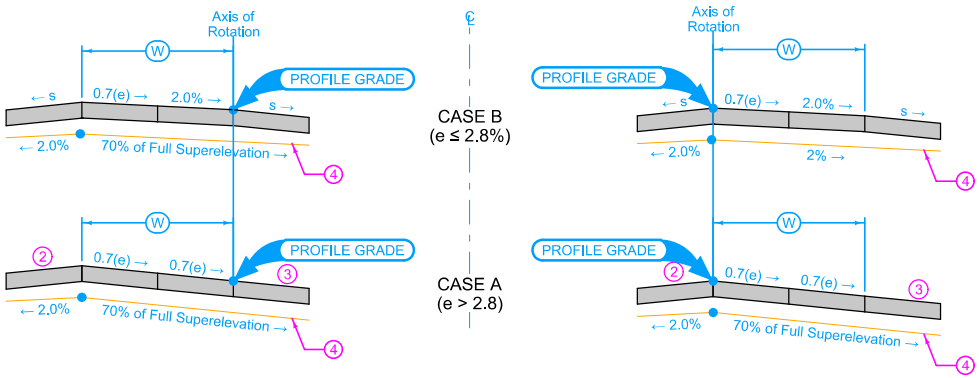

(2) High Side Shoulder: Maintain normal shoulder cross slope (s), until the cross slope break with the adjacent pavement reaches 8.0%. Maintain 8% breakover until superelevation rate reaches 7%. If superelevation rate exceeds 7.0%, maintain a 1% shoulder cross slope away from the adjacent pavement.

(3) Low Side Shoulder: Maintain normal shoulder cross slope (s) until the adjacent pavement slope equals s, then slope the shoulder at the same cross slope as the adjacent pavement.

(4) Subgrade Surface

Iowa Department of Transportation

REVISION	
2	04-17-12

STANDARD ROAD PLAN

PV-302

SHEET 2 of 3

REVISIONS: Added Possible Tabulation.

Deanna Maifield
APPROVED BY DESIGN METHODS ENGINEER

SUPERELEVATION DETAILS
FOUR LANE ROADWAY
DEPRESSED MEDIAN

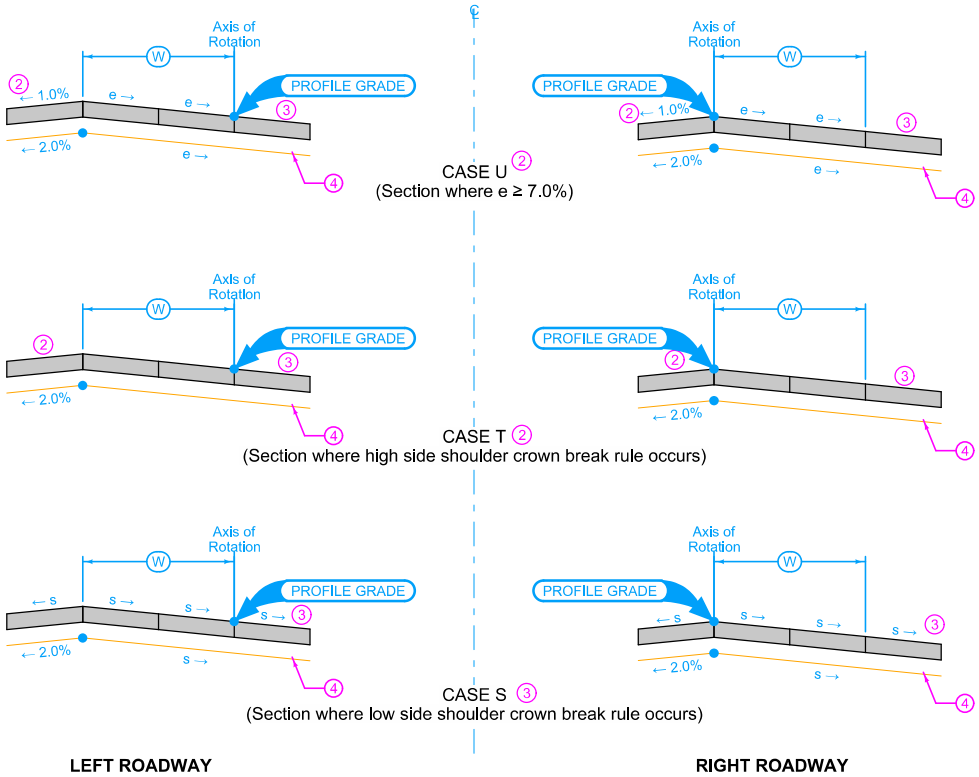

SECTION WHERE SHOULDER SLOPE TRANSITION BEGINS

(2) High Side Shoulder: Maintain normal shoulder cross slope (s), until the cross slope break with the adjacent pavement reaches 8.0%. Maintain 8% breakover until superelevation rate reaches 7%. If superelevation rate exceeds 7.0%, maintain a 1% shoulder cross slope away from the adjacent pavement.

(3) Low Side Shoulder: Maintain normal shoulder cross slope (s) until the adjacent pavement slope equals s, then slope the shoulder at the same cross slope as the adjacent pavement.

(4) Subgrade Surface

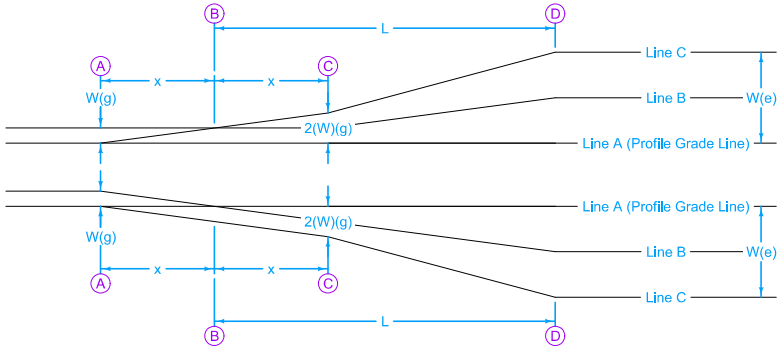

DIAGRAMMATIC PROFILES OF THE PAVEMENT EDGE LINES

Iowa Department of Transportation

STANDARD ROAD PLAN

REVISION	
2	04-17-12

PV-302

SHEET 3 of 3

REVISIONS: Added Possible Tabulation.

Deanna Maifield
APPROVED BY DESIGN METHODS ENGINEER

SUPERELEVATION DETAILS
FOUR LANE ROADWAY
DEPRESSED MEDIAN

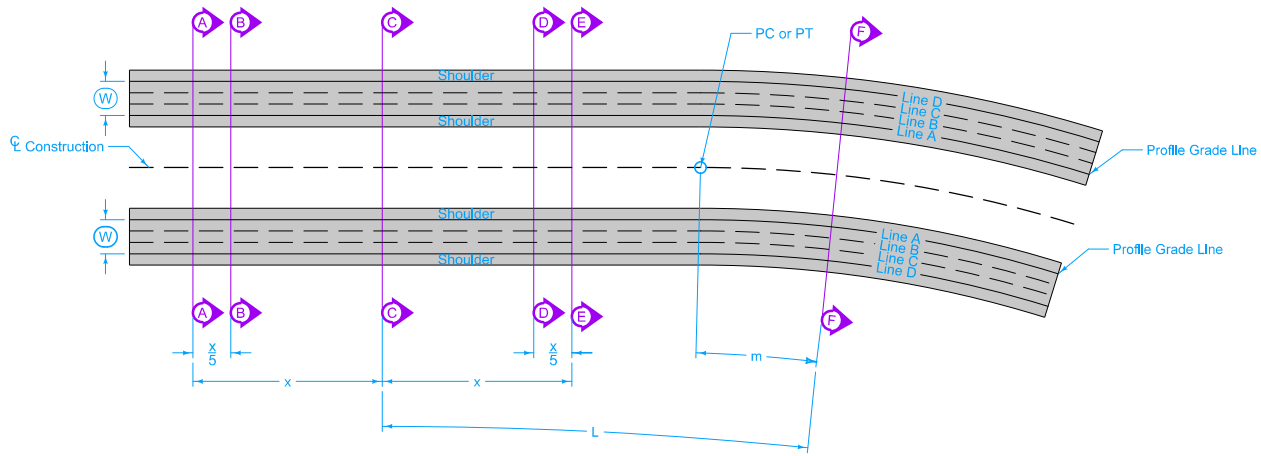

TRANSITION DETAILS - TANGENT TO CURVE

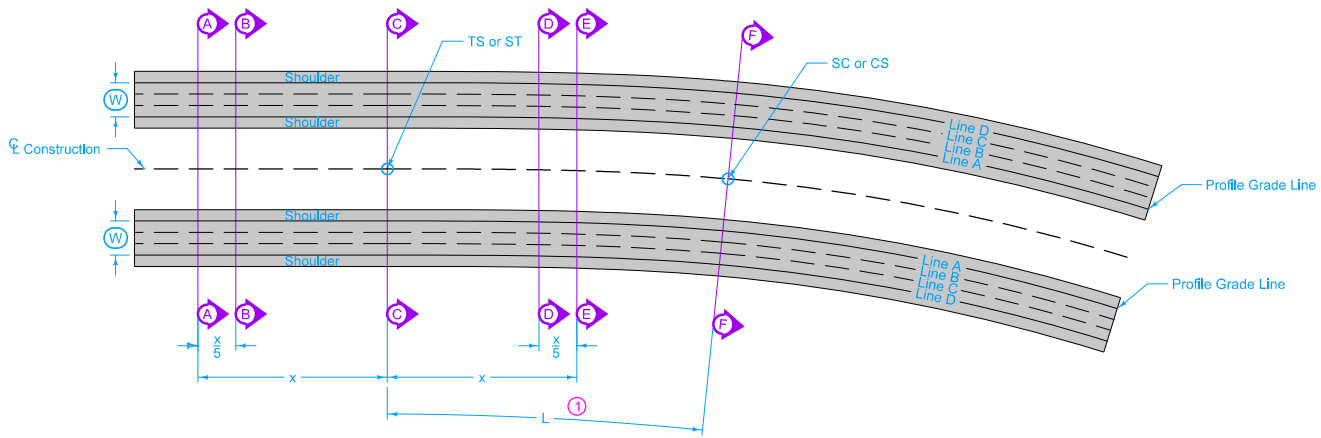

TRANSITION DETAILS - SPIRAL CURVE

Refer to specific curve data contained in project plans for tangent runout length (x), runoff length (L) and full superelevation (e).

When spiral curve transitions are not required:
Place 70% of full superelevation at the PC and PT.
Place 30% of the runoff length within the curve.

Unless otherwise specified, all lengths are measured along the centerline of construction.

Superelevations on this standard are shown for curves to the right. Curves to the left are a mirror image of what is shown.

Smooth curves should be established at the time of construction at sections A-F along the profile edges of lines A-D.

Axis of rotation coincides with profile grade location.

m = 30% of Runoff Length (L)

W = 36' Regardless of Pavement Width

g = Normal Cross Slope (2.5%)

L = Distance to Change Cross Slope from 0% to e

e = Supereleavtion Rate

x = Distance to Change Cross Slope from 0% to 2.5%

s = Normal Shoulder Slope

1 Spiral curve length coincides with runoff length (L)

Possible Tabulation:
101-18

Iowa Department of Transportation

REVISION	
1	04-17-12

STANDARD ROAD PLAN

PV-304

SHEET 1 of 4

REVISIONS: Updated Diagrammatic Profiles of the Pavement Edge Lines on sheet 4. Added Possible Tabulation. Modified circle note 2.

Deanna Maifield
APPROVED BY DESIGN METHODS ENGINEER

SUPERELEVATION DETAILS
SIX LANE ROADWAY
DEPRESSED MEDIAN

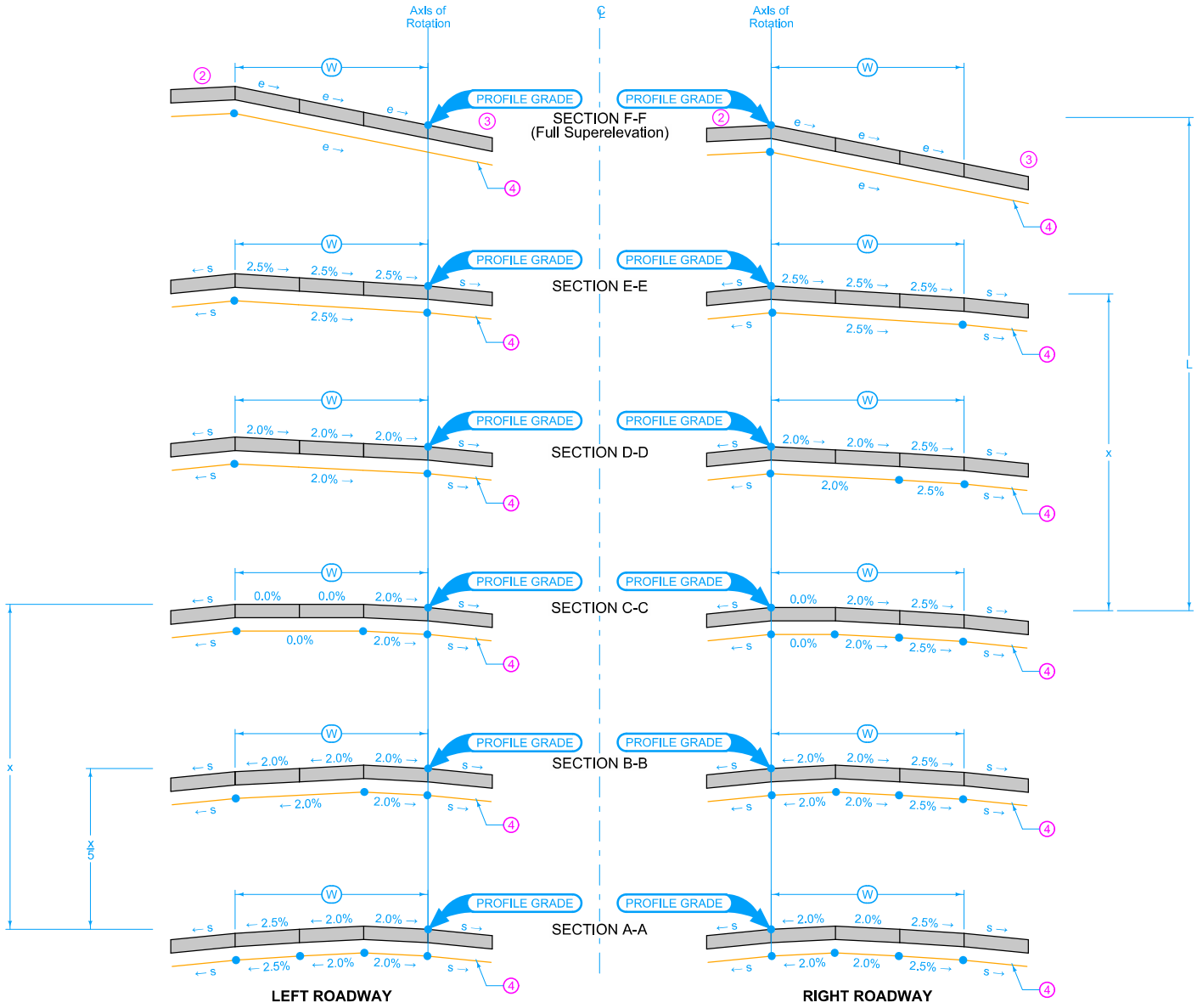

(2) High Side Shoulder: Maintain normal shoulder cross slope (s), until the cross slope break with the adjacent pavement reaches 8.0%. Maintain 8% breakover until superelevation rate reaches 7%. If superelevation rate exceeds 7.0%, maintain a 1% shoulder cross slope away from the adjacent pavement.

(3) Low Side Shoulder: Maintain normal shoulder cross slope (s) until the adjacent pavement slope equals s, then slope the shoulder at the same cross slope as the adjacent pavement.

(4) Subgrade Surface: Subgrade surface cross slope parallel to pavement surface cross slope.

Iowa Department of Transportation

STANDARD ROAD PLAN

REVISION	
1	04-17-12

PV-304

SHEET 2 of 4

REVISIONS: Updated Diagrammatic Profiles of the Pavement Edge Lines on sheet 4. Added Possible Tabulation. Modified circle note 2.

Deanna Maifield

APPROVED BY DESIGN METHODS ENGINEER

SUPERELEVATION DETAILS
SIX LANE ROADWAY
DEPRESSED MEDIAN

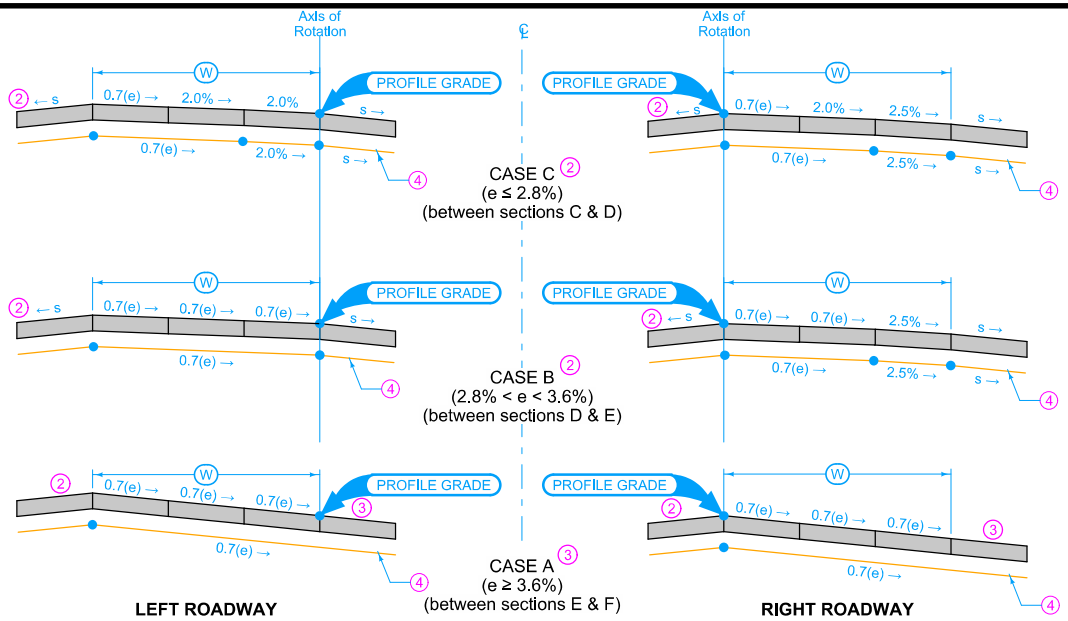

SECTION AT THE PC OR PT

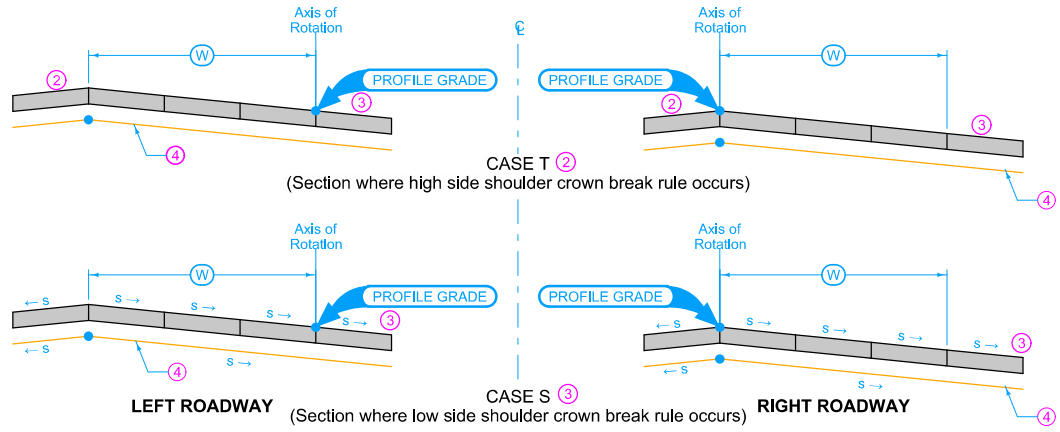

SECTION WHERE SHOULDER SLOPE TRANSITION BEGINS

(2) High Side Shoulder: Maintain normal shoulder cross slope (s), until the cross slope break with the adjacent pavement reaches 8.0%. Maintain 8% breakover until superelevation rate reaches 7%. If superelevation rate exceeds 7.0%, maintain a 1% shoulder cross slope away from the adjacent pavement.

(3) Low Side Shoulder: Maintain normal shoulder cross slope (s) until the adjacent pavement slope equals s, then slope the shoulder at the same cross slope as the adjacent pavement.

(4) Subgrade Surface: Subgrade surface cross slope parallel to pavement surface cross slope.

Iowa Department of Transportation

STANDARD ROAD PLAN

REVISION	
1	04-17-12

PV-304

SHEET 3 of 4

REVISIONS: Updated Diagrammatic Profiles of the Pavement Edge Lines on sheet 4. Added Possible Tabulation. Modified circle note 2.

Deanna Maifield
APPROVED BY DESIGN METHODS ENGINEER

SUPERELEVATION DETAILS
SIX LANE ROADWAY
DEPRESSED MEDIAN

TABLE OF OFFSETS AND DROPS FOR LEFT ROADWAY							
Location of Cross Sections		(A)	(B)	(C)	(D)	(E)	(F)
From Line A To Line B	Offset (Ft.)	12	12	12	12	12	12
	Slope (%)	2.0	2.0	2.0	2.0	2.5	e
	Drop (Ft.)	0.24	0.24	0.24	0.24	0.30	12(e)
From Line B To Line C	Offset (Ft.)	12	12	12	12	12	12
	Slope (%)	-2.0	-2.0	0.0	2.0	2.5	e
	Drop (Ft.)	-0.24	-0.24	0.0	0.24	0.30	12(e)
From Line C To Line D	Offset (Ft.)	12	12	12	12	12	12
	Slope (%)	-2.5	-2.0	0.0	2.0	2.5	e
	Drop (Ft.)	-0.30	-0.24	0.0	0.24	0.30	12(e)
From Line A To Line D	Offset (Ft.)	36	36	36	36	36	36
	Drop (Ft.)	-0.30	-0.24	0.24	0.72	0.90	36(e)

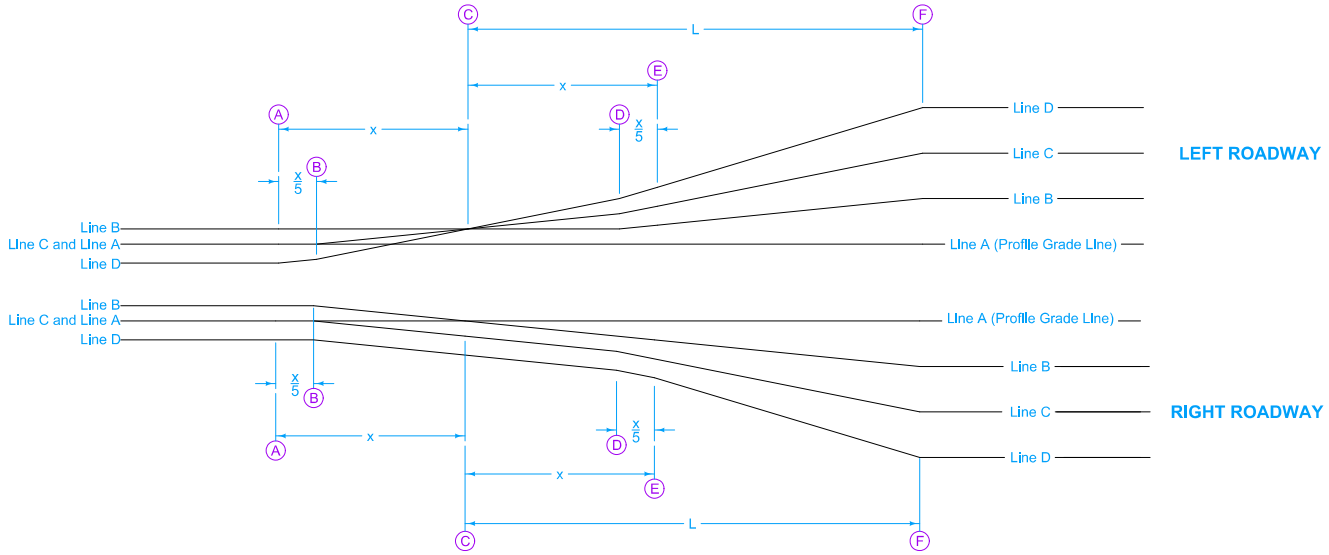

DIAGRAMMATIC PROFILES OF THE PAVEMENT EDGE LINES

TABLE OF OFFSETS AND DROPS FOR RIGHT ROADWAY							
Location of Cross Sections		(A)	(B)	(C)	(D)	(E)	(F)
From Line A To Line B	Offset (Ft.)	12	12	12	12	12	12
	Slope (%)	2.0	2.0	0.0	-2.0	-2.5	-e
	Drop (Ft.)	0.24	0.24	0.0	-0.24	-0.30	-12(e)
From Line B To Line C	Offset (Ft.)	12	12	12	12	12	12
	Slope (%)	-2.0	-2.0	-2.0	-2.0	-2.5	-e
	Drop (Ft.)	-0.24	-0.24	-0.24	-0.24	-0.30	-12(e)
From Line C To Line D	Offset (Ft.)	12	12	12	12	12	12
	Slope (%)	-2.5	-2.5	-2.5	-2.5	-2.5	-e
	Drop (Ft.)	-0.30	-0.30	-0.30	-0.30	-0.30	-12(e)
From Line A To Line D	Offset (Ft.)	36	36	36	36	36	36
	Slope (%)						
	Drop (Ft.)	-0.30	-0.30	-0.54	-0.78	-0.90	-36(e)

Iowa Department of Transportation

STANDARD ROAD PLAN

REVISION

1	04-17-12

PV-304

SHEET 4 of 4

REVISIONS: Updated Diagrammatic Profiles of the Pavement Edge Lines on sheet 4. Added Possible Tabulation. Modified circle note 2.

Deanna Maifield

APPROVED BY DESIGN METHODS ENGINEER

SUPERELEVATION DETAILS
SIX LANE ROADWAY
DEPRESSED MEDIAN

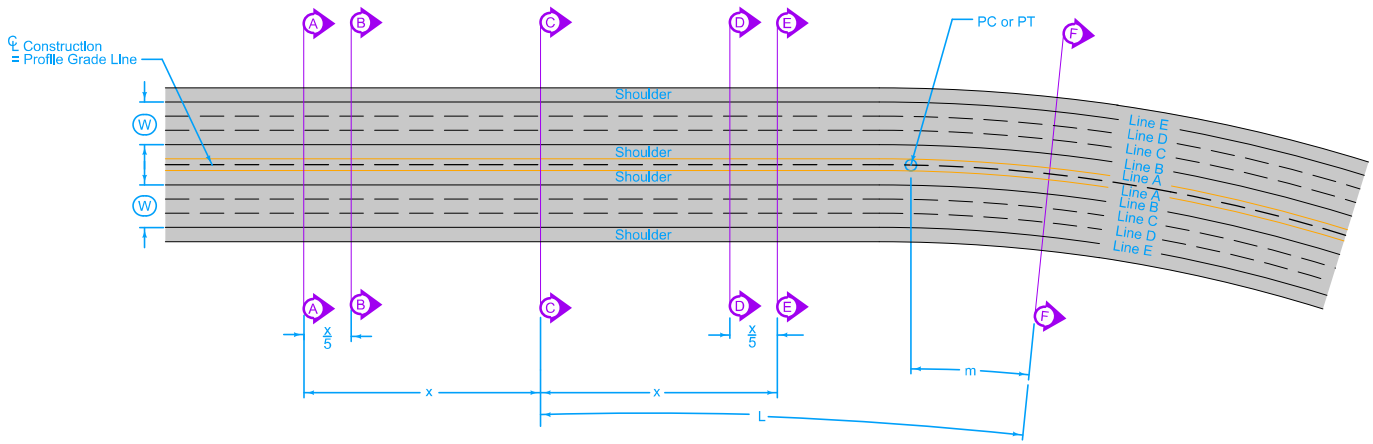

TRANSITION DETAILS - TANGENT TO CURVE

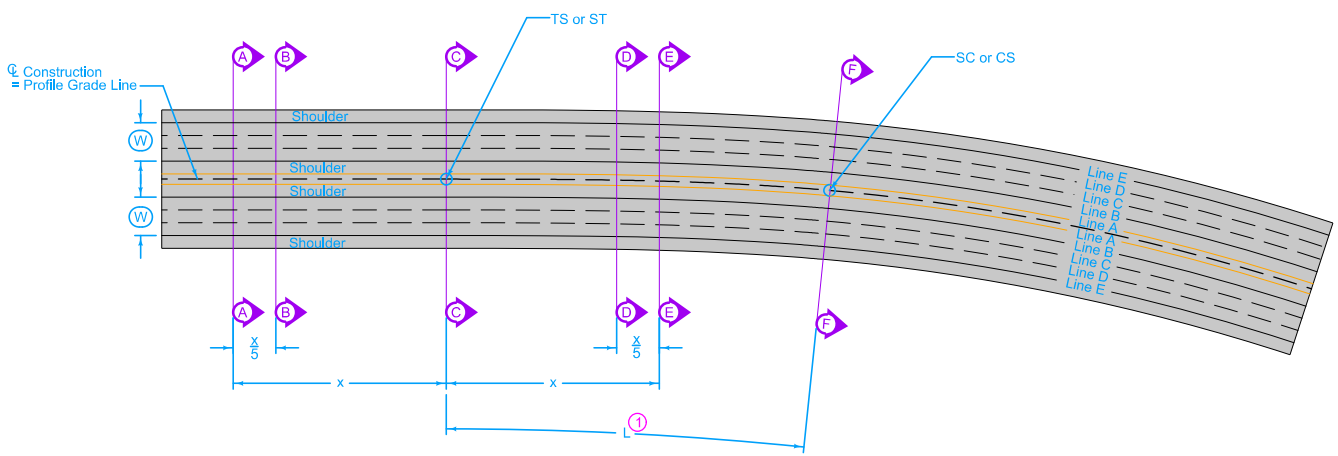

TRANSITION DETAILS - SPIRAL CURVE

Refer to specific curve data contained in project plans for tangent runout length (x), runoff length (L) and full superelevation (e).

When spiral curve transitions are not required:
Place 70% of full superelevation at the P.C. and P.T.
Place 30% of the runoff length within the curve.

Unless otherwise specified, all lengths are measured along the centerline of construction.

Superelevations on this standard are shown for curves to the right. Curves to the left are a mirror image of what is shown.

Smooth curves should be established at the time of construction at sections A-F along the profile edge of lines A-E.

See Detail A for profile grade location.

m = 30% of Runoff Length (L)

W = 36'

L = Distance to Change Cross Slope from 0% to e

e = Superelevation Rate

x = Distance to Change Cross Slope from 0% to 2.5%

s = Normal Shoulder Slope

1 Spiral curve length coincides with runoff length (L)

Possilbe Tabulation:
101-18

Iowa Department of Transportation

REVISION	
2	04-17-12

STANDARD ROAD PLAN

PV-305

SHEET 1 of 4

REVISIONS: Added Possible Tabulation.

Deanna Maifield
APPROVED BY DESIGN METHODS ENGINEER

SUPERELEVATION DETAILS
SIX LANE ROADWAY
CLOSED MEDIAN

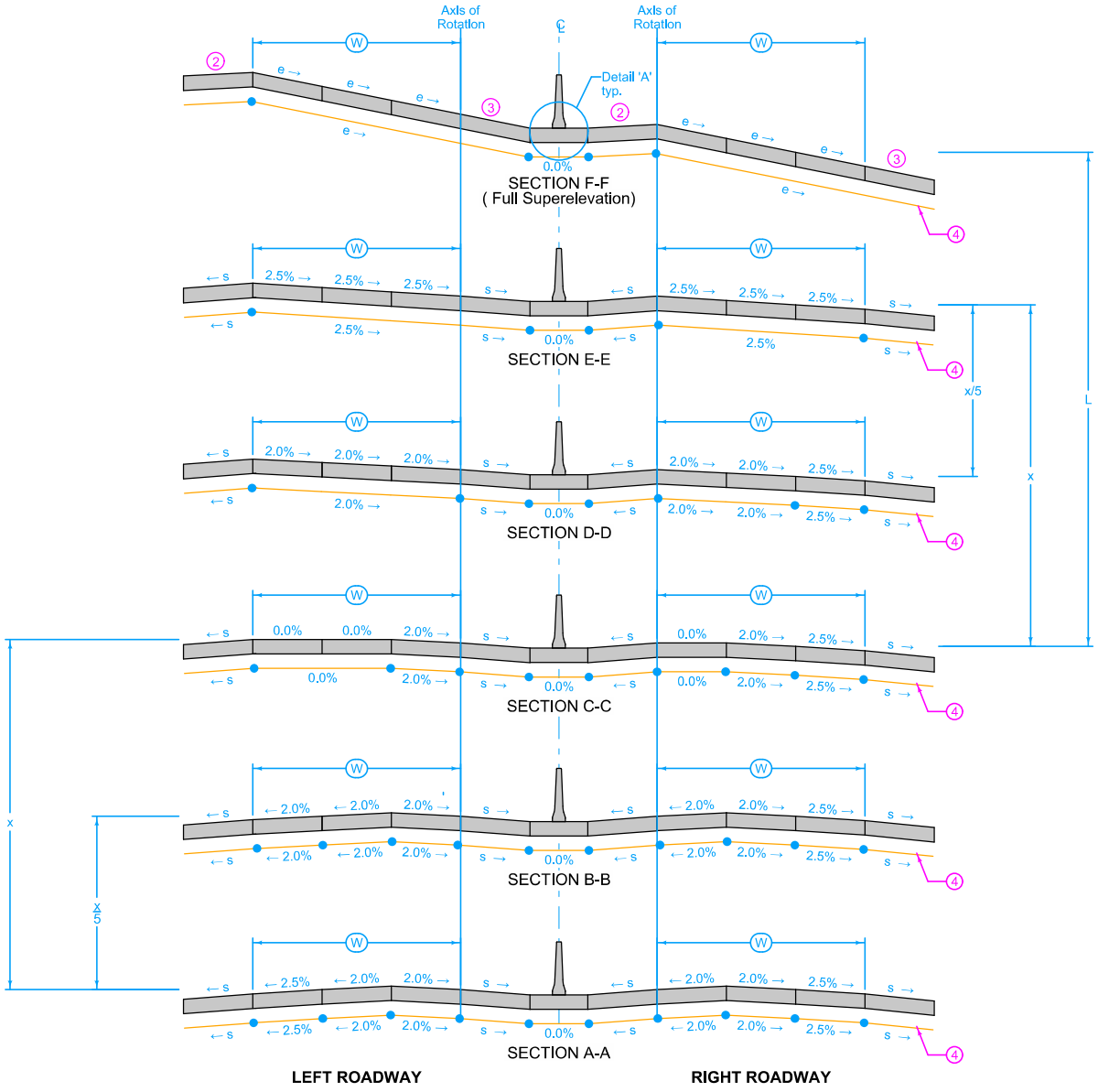

② High Side Shoulder: Maintain normal shoulder cross slope (s) until the cross slope break with the adjacent pavement reaches 8.0%, then slope the shoulder at the same rate as the adjacent pavement maintaining an 8% cross slope breakover.

③ Low Side Shoulder: Maintain normal shoulder cross slope (s) until the adjacent pavement slope equals s, then slope the shoulder at the same cross slope as the adjacent pavement.

④ Subgrade Surface: Subgrade surface cross slope parallel to pavement surface cross slope.

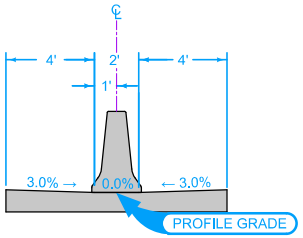

DETAIL A

Iowa Department of Transportation

STANDARD ROAD PLAN

REVISION	
2	04-17-12

PV-305

SHEET 2 of 4

REVISIONS: Added Possible Tabulation.

Deanna Maifield
APPROVED BY DESIGN METHODS ENGINEER

SUPERELEVATION DETAILS
SIX LANE ROADWAY
CLOSED MEDIAN

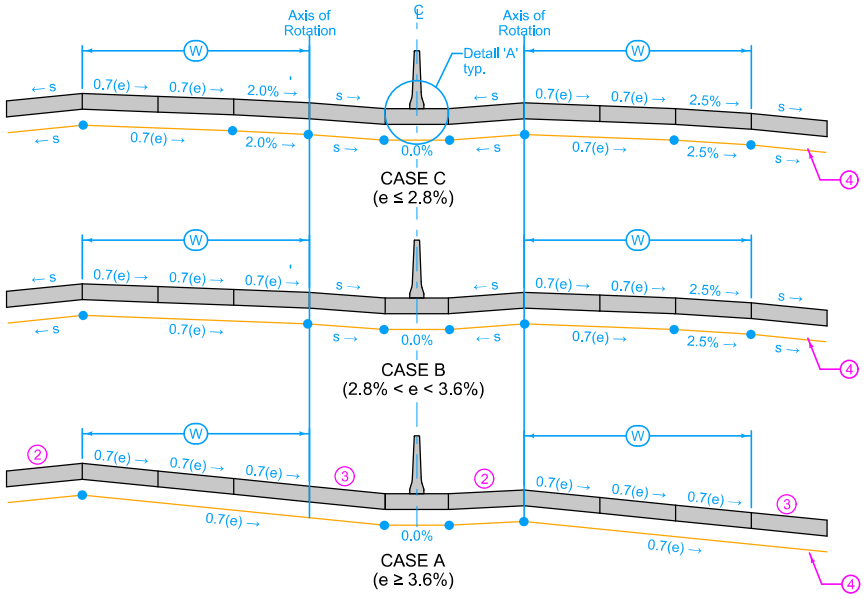

SECTION AT THE PC OR PT

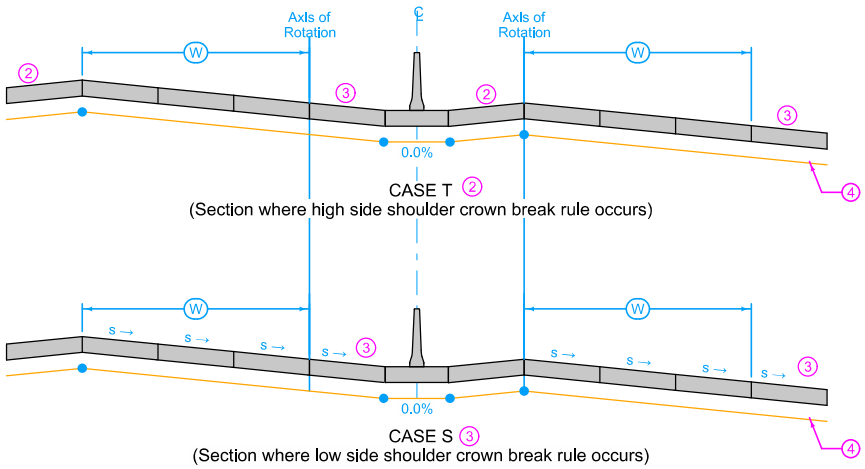

SECTION WHERE SHOULDER SLOPE TRANSITION BEGINS

② High Side Shoulder: Maintain normal shoulder cross slope (s) until the cross slope break with the adjacent pavement reaches 8.0%, then slope the shoulder at the same rate as the adjacent pavement maintaining an 8% cross slope breakover.

③ Low Side Shoulder: Maintain normal shoulder cross slope (s) until the adjacent pavement slope equals s, then slope the shoulder at the same cross slope as the adjacent pavement.

④ Subgrade Surface: Subgrade surface cross slope parallel to pavement surface cross slope.

Iowa Department of Transportation

STANDARD ROAD PLAN

REVISION	
2	04-17-12

PV-305

SHEET 3 of 4

REVISIONS: Added Possible Tabulation.

Deanna Maifield
APPROVED BY DESIGN METHODS ENGINEER

SUPERELEVATION DETAILS
SIX LANE ROADWAY
CLOSED MEDIAN

TABLE OF OFFSETS AND DROPS FOR LEFT ROADWAY							
Location of Cross Sections		(A)	(B)	(C)	(D)	(E)	(F)
From Line A To Line B	Offset (Ft.)	*	*	*	*	*	*
	Slope (%)	s	s	s	s	s	(3)
	Drop (Ft.)						
From Line B To Line C	Offset (Ft.)	12	12	12	12	12	12
	Slope (%)	2.0	2.0	2.0	2.0	2.5	e
	Drop (Ft.)	0.24	0.24	0.24	0.24	0.30	12(e)
From Line C To Line D	Offset (Ft.)	12	12	12	12	12	12
	Slope (%)	-2.0	-2.0	0.0	2.0	2.5	e
	Drop (Ft.)	-0.24	-0.24	0.0	0.24	0.30	12(e)
From Line D To Line E	Offset (Ft.)	12	12	12	12	12	12
	Slope (%)	-2.5	-2.0	0.0	2.0	2.5	e
	Drop (Ft.)	-0.30	-0.24	0.0	0.24	0.30	12(e)

* Refer to plan details for shoulder width

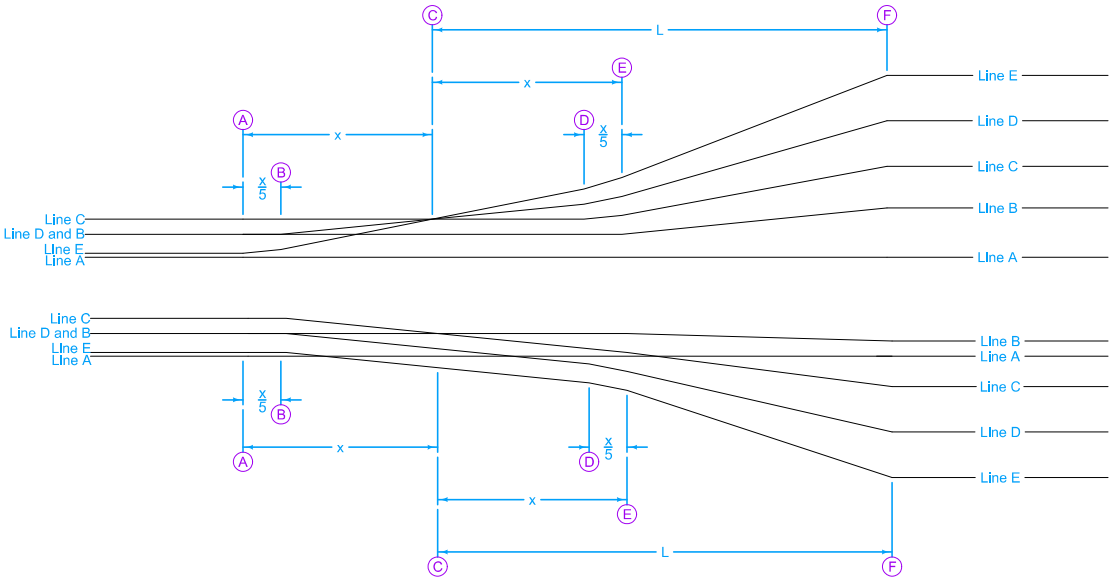

DIAGRAMMATIC PROFILES OF THE PAVEMENT EDGE LINES

TABLE OF OFFSETS AND DROPS FOR RIGHT ROADWAY							
Location of Cross Sections		(A)	(B)	(C)	(D)	(E)	(F)
From Line A To Line B	Offset (Ft.)	*	*	*	*	*	*
	Slope (%)	s	s	s	s	3.0	(2)
	Drop (Ft.)						
From Line B To Line C	Offset (Ft.)	12	12	12	12	12	12
	Slope (%)	2.0	2.0	0.0	-2.0	-2.5	-e
	Drop (Ft.)	0.24	0.24	0.0	-0.24	-0.30	-12(e)
From Line C To Line D	Offset (Ft.)	12	12	12	12	12	12
	Slope (%)	-2.0	-2.0	-2.0	-2.0	-2.5	-e
	Drop (Ft.)	-0.24	-0.24	-0.24	-0.24	-0.30	-12(e)
From Line D To Line E	Offset (Ft.)	12	12	12	12	12	12
	Slope (%)	-2.5	-2.5	-2.5	-2.5	-2.5	-e
	Drop (Ft.)	-0.30	-0.30	-0.30	-0.30	-0.30	-12(e)

* Refer to plan details for shoulder width

Iowa Department of Transportation

STANDARD ROAD PLAN

REVISION	
2	04-17-12

PV-305

SHEET 4 of 4

REVISIONS: Added Possible Tabulation.

Deanna Maifield
APPROVED BY DESIGN METHODS ENGINEER

SUPERELEVATION DETAILS
SIX LANE ROADWAY
CLOSED MEDIAN

SECTION

RF

Drainage

NO.	DATE	TITLE
RF-2	10-18-11	Construction of Type "C" Concrete Adaptors for Pipe Culvert Connections
RF-3	10-18-11	Concrete Aprons
RF-5	10-03-00	Metal Pipe Aprons and Beveled Ends
RF-7	10-16-07	Corrugated Metal Type "A" Diaphragm
RF-8	10-28-97	Precast Stock Pass
RF-13	10-18-11	Pipe Bends and Half Pipe
RF-14	10-18-11	Connected Pipe Joints
RF-19A	07-15-97	Subdrains for Fill or Foundation Drainage (Standard)
RF-19B	04-17-12	Subdrains Standard (Farm Tile Replacement)
RF-19C	10-19-10	Subdrains (Longitudinal)
RF-19E	10-20-09	Outlets for Longitudinal, Transverse and Backslope Subdrains
RF-19F	04-25-00	Subdrain Outlets (Standard Subdrain, Pressure Release and Special)
RF-21	10-18-11	Culvert Pipe Tee Sections
RF-26	10-18-11	Pipe Apron Guard
RF-27	10-19-10	Beveled Pipe and Guard
RF-29	04-20-10	Safety Grates for Box Culverts
RF-30A	10-19-10	Culvert (Bedding and Backfill)
RF-30B	10-19-10	Pipe Culvert (Cover and Camber)
RF-30C	04-30-02	Pipe Culvert (Installation Details)
RF-31	03-28-95	Depth of Cover Tables for Concrete Pipe
RF-32	10-19-10	Depth of Cover Tables for Corrugated Pipe
RF-38	04-20-10	Intake for Bridge End Drain
RF-39	04-19-11	Scour Protection for Bridge End Drain
RF-40	10-19-10	Rock Flume for Bridge End Drain
RF-42	04-17-12	Low Clearance Concrete Pipe Aprons
RF-43	10-03-00	Metal Arch Aprons (for Corrugated Metal Pipe)
RF-44	10-03-00	Metal Safety Slope Apron 6:1 Slope
RF-45	10-19-10	Slotted Drain for Median Crossovers

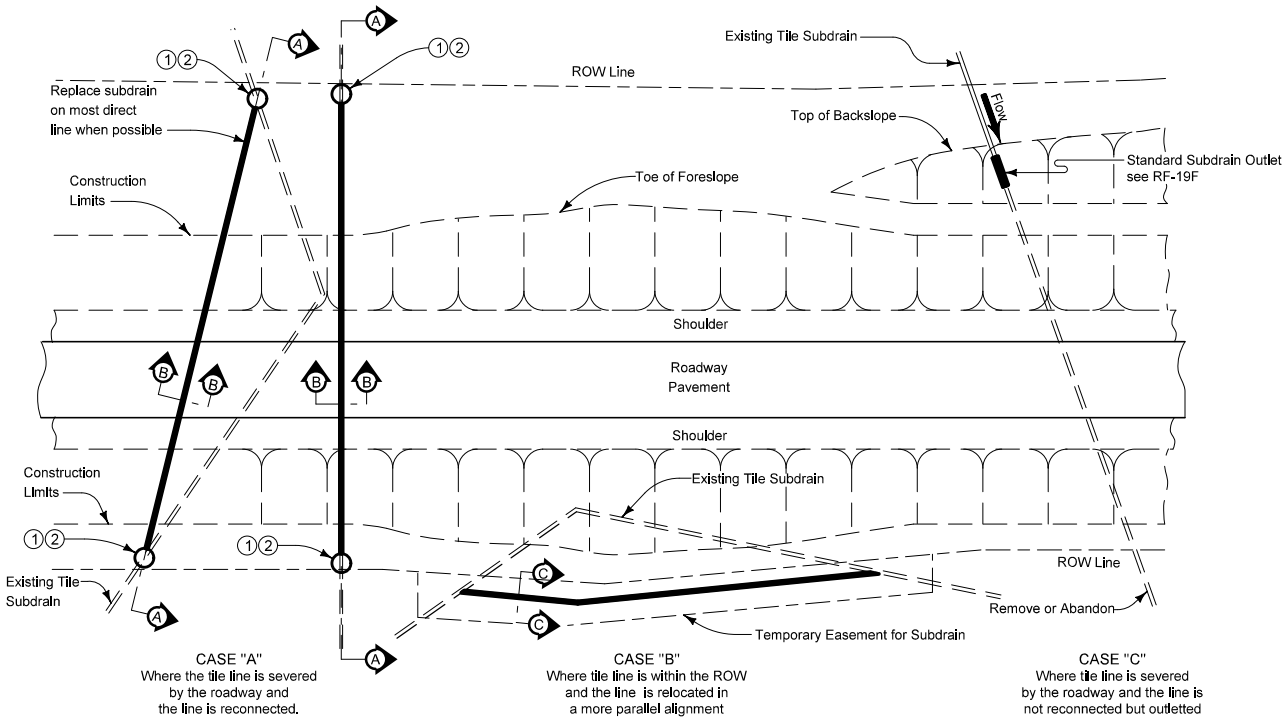

TYPICAL PLAN FOR REPLACING OR RELOCATING EXISTING FIELD TILE

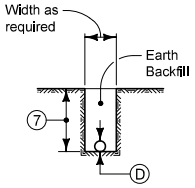

CASE "A"
SECTION B-B

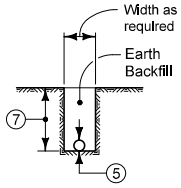

CASE "B"
SECTION C-C

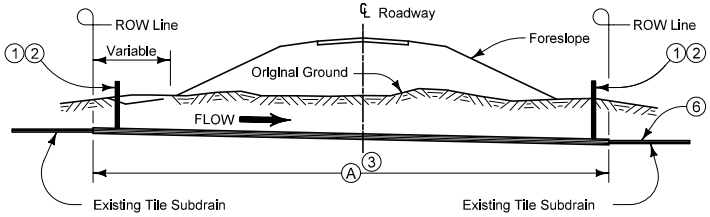

CASE "A"
SECTION A-A

1. 4" Diameter inspection access with cap. Minimum of 3' above ground. Use PVC meeting the requirements of Article 4146.03.
2. Inspection access is required to allow inspection by the upstream and downstream property owners. Perforated pipe may be used to allow ditch drainage into subdrain if approved by adjacent property owners.
3. Dimension (A) indicates the R.O.W. limits in which replacement of tile subdrain in accordance with the replacement schedule is required.
4. Replacement sizes provide equivalent capacity based on a 6" settlement assuming a 0.20% slope with n=0.013 for concrete pipe and n=0.025 for corrugated pipe (Manning's Formula).
5. Replace in kind (size and type) or with 'PE' slotted pipe, a minimum of one size larger than existing line.
6. When multiple drains are connected to one outlet, the outlet is to provide full capacity for all connected drain systems.
7. Depth as required

When the existing tile lines are intercepted by roadway construction, replace them within the ROW limits of the project, or outlet them in a ditch or channel. Where the roadway intersects the tile line in an undesirable alignment, as shown in Case 'A', relocate the tile line to accomplish a more nearly right angle. Where the existing tile line alignment is more parallel to the roadway and within the construction limits, relocate the tile outside the ROW line, as shown in Case 'B'. In cases where new construction requires existing subdrain to outlet into the roadway ditch, as shown in Case 'C', provide the Standard Subdrain Outlet shown in RF-19F.

Replace tile lines within the ROW limits according to the replacement schedule shown below. Install an inspection access at each end of replaced tile line. Replace tile lines outside the ROW limits using the same size of pipe as existing line.

REPLACEMENT SCHEDULE CASE 'A'
(Pipe size in inches)

Existing Tile Size	PROPOSED SUBDRAIN SIZE (D) (4)	
	Concrete Pipe	Coated CMP Pipe
4	-	10
6	-	12
8	12	15
10	15	18
12	15	21
15	18	24
18	21	30
21	24	36
24	30	36
> 24	Existing tile size + 6"	(6)

Install relocated or replacement subdrain so as to cause a minimum of disturbance to existing field tile. Connect to lines of existing tile drains in such a way as to leave the existing tile drains in a functional condition.

Cap blind ends of subdrains with a metal cap or as approved by the Engineer.

When concrete culvert pipe of 2000D (Class III) or stronger is required, furnish and install a RF-14 Type 1 connection at no additional cost to the Contracting Authority.

Possible Tabulation:
104-5C

Possible Contract Items:
Standard Subdrain
Subdrain Outlet

Iowa Department of Transportation

STANDARD ROAD PLAN

REVISION 6 04-17-12

RF-19B

SHEET 1 of 1

REVISIONS: Updated notes and added Possible tabulation and Possible contract Items.

Deanna Maifield
APPROVED BY DESIGN METHODS ENGINEER

SUBDRAINS STANDARD (FARM TILE REPLACEMENT)

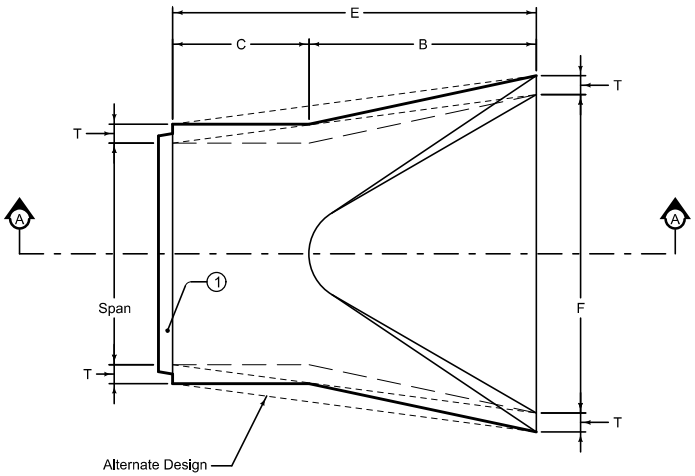

PLAN

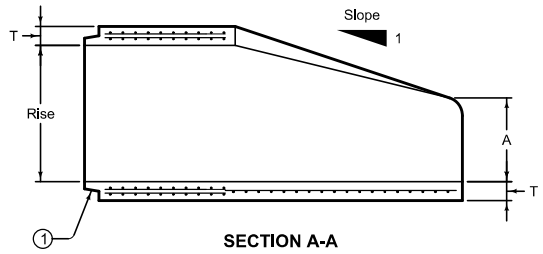

SECTION A-A

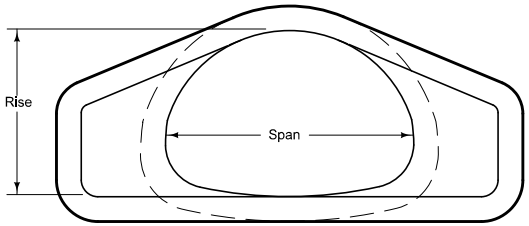

END

Comply with AASHTO M 206 for Apron Reinforcement.

Dimension "E" shown is minimum and is considered the design length. Appropriately adjust for any difference between the actual length of concrete apron installed and the length indicated hereon for the length of concrete culvert pipe furnished.

(1) Tongue end on inlet end section. Groove end on outlet end section. (Inlet end section shown.)

NOMINAL DIMENSIONS SPAN X RISE Inches	EQUIVALENT DIAMETER Inches	SPAN Inches	RISE Inches	SLOPE	APPROXIMATE DIMENSIONS Inches					
					T	A	B	C	E	F
22 X 14	18	22	$13\frac{1}{2}$	3:1	$2\frac{1}{2}$	7	27	45	72	36
29 X 18	24	$28\frac{1}{2}$	18	3:1	3	$8\frac{1}{2}$	39	33	72	48
37 X 23	30	$36\frac{1}{4}$	$22\frac{1}{2}$	3:1	$3\frac{1}{2}$	$9\frac{1}{2}$	50	46	96	60
44 X 27	36	$43\frac{3}{8}$	$26\frac{5}{8}$	3:1	4	$11\frac{1}{8}$	60	36	96	72
52 X 32	42	$51\frac{1}{8}$	$31\frac{5}{16}$	3:1	$4\frac{1}{2}$	$15\frac{13}{16}$	60	36	96	78
59 X 36	48	$58\frac{1}{2}$	36	3:1	5	21	60	36	96	84
65 X 40	54	65	40	3:1	$5\frac{1}{2}$	$25\frac{1}{2}$	60	36	96	90
73 X 45	60	73	45	3:1	6	31	60	36	96	96
88 X 54	72	88	54	2:1	7	31	60	39	99	120
102 X 62	84	102	62	2:1	8	$21\frac{1}{2}$	83	19	102	144

Possible Contract Item:
Low Clearance Concrete Pipe Aprons

Possible Tabulations:
104-3
104-4

Iowa Department of Transportation

REVISION 6 04-17-12

STANDARD ROAD PLAN

RF-42

SHEET 1 of 3

REVISIONS: Added option for elliptical pipe. Changed title. Changed Possible Contract Item to "Low Clearance Concrete Pipe Aprons

Deanna Maifield
APPROVED BY DESIGN METHODS ENGINEER

LOW CLEARANCE CONCRETE PIPE APRONS

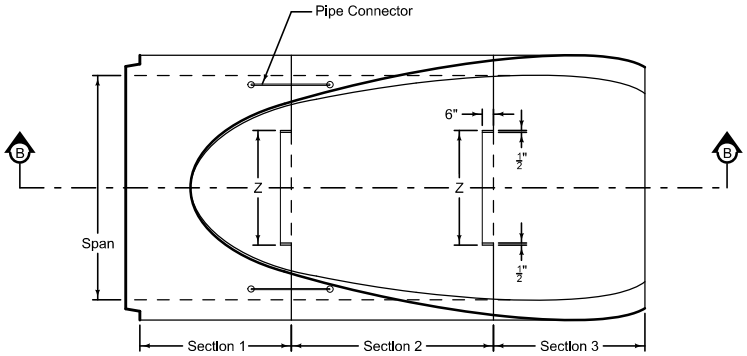

PLAN

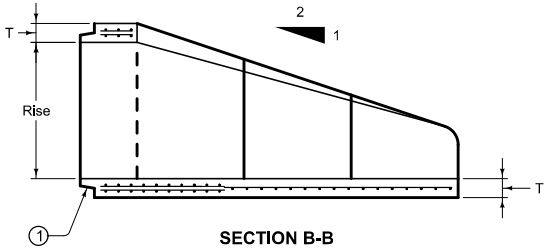

SECTION B-B

(1) Tongue end on inlet end section. Groove end on outlet end section. (Inlet end section shown.)

(3) 132" size is a three-piece end section.

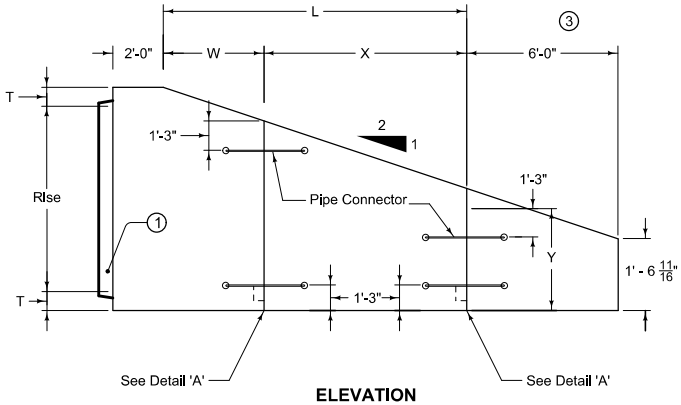

ELEVATION

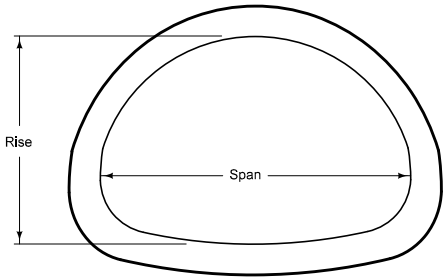

END

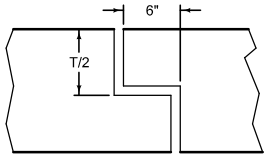

DETAIL 'A'

NOMINAL DIMENSIONS SPAN X RISE Inches	EQUIVALENT DIAMETER Inches	SPAN Inches	RISE Inches	APPROXIMATE DIMENSIONS Inches					
				(T)	(L)	(W)	(X)	(Y)	(Z)
115 X 72	90	115	72	$8\frac{1}{2}$	$102\frac{1}{4}$	72	$30\frac{1}{4}$	$37\frac{7}{8}$	48
122 X 78	96	122	$77\frac{1}{2}$	9	$112\frac{1}{2}$	72	$40\frac{1}{2}$	39	54
138 X 88	108	138	$87\frac{1}{8}$	10	$129\frac{1}{2}$	48	$81\frac{1}{2}$	$42\frac{3}{8}$	66
154 X 97	120	154	$96\frac{7}{8}$	11	144	48	96	$46\frac{7}{8}$	78
169 X 107	132 (3)	$168\frac{3}{4}$	$106\frac{1}{2}$	10	144	48	96	$54\frac{5}{8}$	90

Iowa Department of Transportation

REVISION 6 04-17-12

STANDARD ROAD PLAN

RF-42

SHEET 2 of 3

REVISIONS: Added option for elliptical pipe. Changed title. Changed Possible Contract Item to "Low Clearance Concrete Pipe Aprons

Deanna Maifield

APPROVED BY DESIGN METHODS ENGINEER

LOW CLEARANCE CONCRETE PIPE APRONS

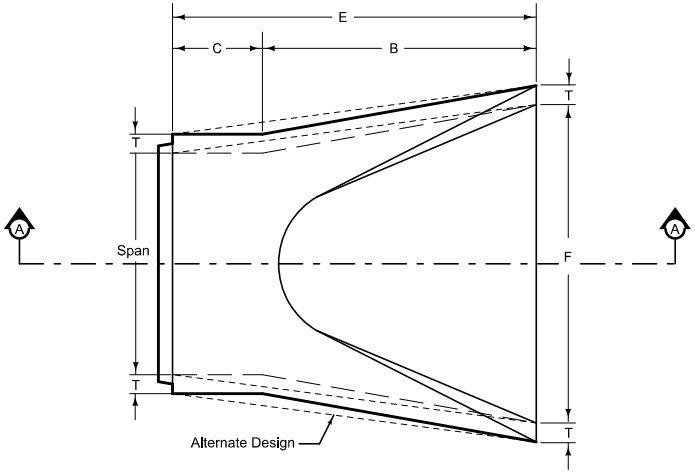

PLAN

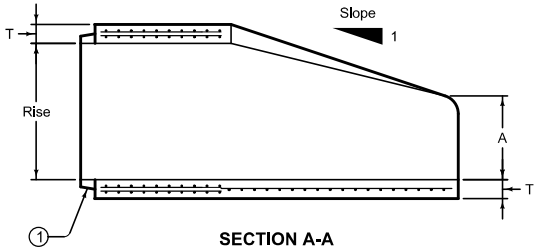

SECTION A-A

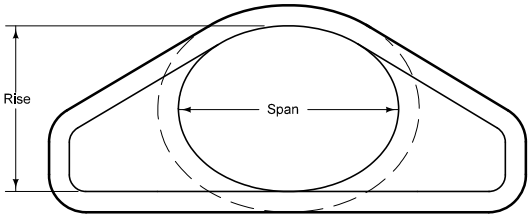

END

Comply with AASHTO M 207 for Apron Reinforcement.

Dimension "E" shown is minimum and is considered the design length. Appropriately adjust for any difference between the actual length of concrete apron installed and the length indicated hereon for the length of concrete culvert pipe furnished.

(1) Tongue end on inlet end section. Groove end on outlet end section. (Inlet end section shown.)

EQUIVALENT DIAMETER Inches	SPAN Inches	RISE Inches	SLOPE	APPROXIMATE DIMENSIONS Inches					
				(T)	(A)	(B)	(C)	(E)	(F)
18	23	14	3:1	$2\frac{3}{4}$	$7\frac{1}{2}$	27	45	72	36
24	30	19	3:1	$3\frac{1}{4}$	$8\frac{1}{2}$	39	33	72	48
30	38	24	3:1	$3\frac{3}{4}$	$9\frac{1}{2}$	54	18	72	60
36	45	29	2.5 to 1	$4\frac{1}{2}$	$11\frac{1}{8}$	60	24	84	72
42	53	34	2.5 to 1	5	$15\frac{3}{4}$	60	36	96	78
48	60	38	2.5 to 1	$5\frac{1}{2}$	21	60	36	96	84
54	68	43	2.5 to 1	6	$25\frac{1}{2}$	60	36	96	90
60	76	48	2.5 to 1	$6\frac{1}{2}$	30	60	36	96	96
72	91	58	2.5 to 1	$7\frac{1}{2}$	36	63	33	96	108
90	113	72	1.6 to 1	9	$36\frac{1}{2}$	58	38	96	113

Iowa Department of Transportation

REVISION 6 04-17-12

STANDARD ROAD PLAN

RF-42

SHEET 3 of 3

REVISIONS: Added option for elliptical pipe. Changed title. Changed Possible Contract Item to "Low Clearance Concrete Pipe Aprons

Deanna Maifield

APPROVED BY DESIGN METHODS ENGINEER

LOW CLEARANCE CONCRETE PIPE APRONS

SECTION

Bridge Approach Pavement

RK

NO.	DATE	TITLE
RK-16	04-19-11	Bridge Approach Details (in Conjunction with Bridge Deck Overlay)
RK-17	04-19-11	PCC Overlay of Reinforced Bridge Approach Section
RK-18	04-19-11	Bridge Approach Details (Secondary Roads)
RK-19A	04-19-11	Bridge Approach Section (General Details)
RK-19B	04-19-11	Bridge Approach Section (Two-Lane) (Abutting PCC Pavement)
RK-19C	04-19-11	Bridge Approach Section (Two Lane for Bridge Reconstruction, P.C.C. Pavement)
RK-19F	04-19-11	Bridge Approach Section (at Existing Bridges, PCC Pavement)
RK-19G	04-19-11	Bridge Approach Section (Two Lane, HMA Pavement)
RK-19H	04-19-11	Bridge Approach Section (Two Lane for Bridge Reconstruction, HMA Pavement)
RK-19J	04-19-11	Bridge Approach Section (at Existing Bridges, HMA Pavement)
RK-20	04-17-12	Double Reinforced 12" Approach
RK-21	04-19-11	Bridge Approach (abutting PCC or Composite Pavement)
RK-22	04-19-11	Bridge Approach (abutting HMA Pavement)
RK-23	04-19-11	Bridge Approach (Multi-Lane, Curbed Roadway)
RK-25	04-17-12	Double Reinforced 10" Approach
RK-26	04-17-12	Double Reinforced 10" Approach with Variable Depth Paving Notch
RK-27	04-17-12	Double Reinforced 12" Approach with Variable Depth Paving Notch
RK-30	04-19-11	Bridge Approach (Abutting Pavement)

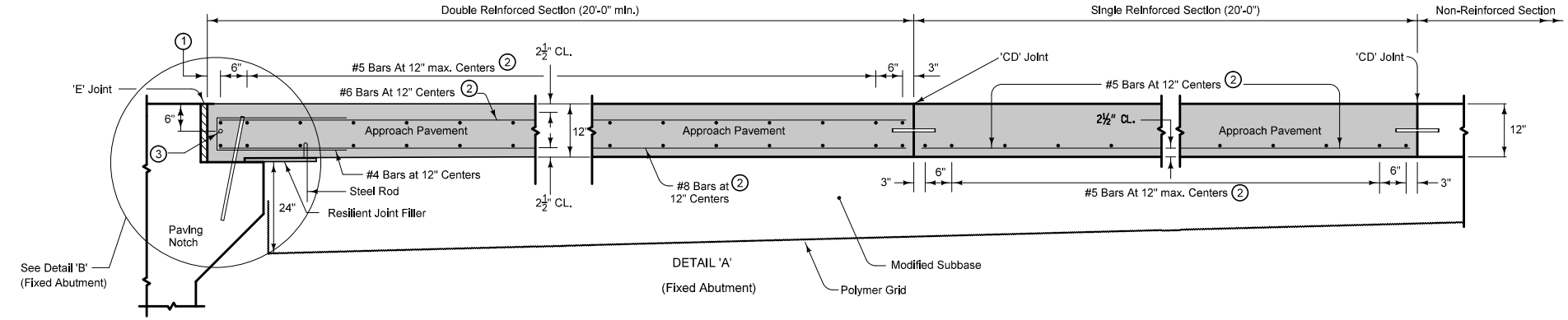

DETAIL 'A'

(Fixed Abutment)

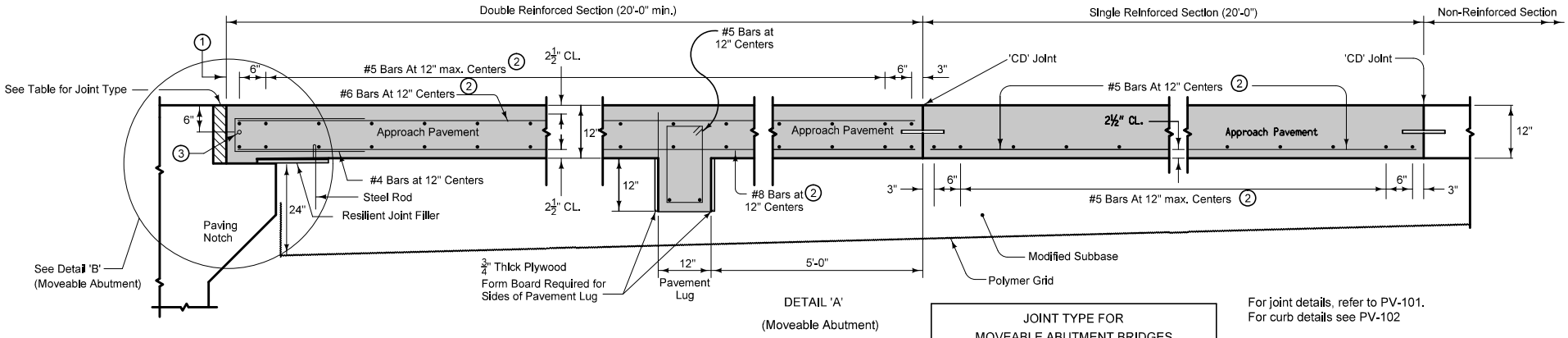

DETAIL 'A'

(Moveable Abutment)

JOINT TYPE FOR MOVEABLE ABUTMENT BRIDGES		
Joint	Maximum Bridge Length	
	Concrete Beam or Slab	Steel Girder
CF-1	370'	250'
CF-2	465'	320'
CF-3	575'	400'

For joint details, refer to PV-101.
For curb details see PV-102

All transverse bars are #5.

Possible Contract Item:

Bridge Approach, RK-20

Possible Tabulation: 112-6

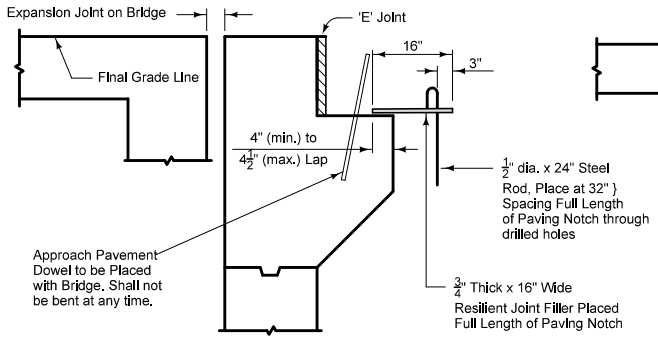

DETAIL 'B' (Fixed Abutment)

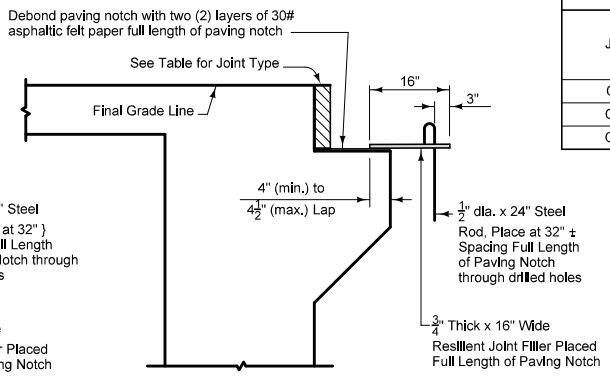

DETAIL 'B' (Moveable Abutment)

(1) 2" min. to 2 1/2" max. clear to bent bar.

(2) Minimum lap length: #5 Bars - 18"
#6 Bars - 27"
#8 Bars - 48"

(3) If bridge is skewed, place additional #5 bar parallel to skewed face.

Iowa Department of Transportation

STANDARD ROAD PLAN

REVISION	
9	04-17-12

RK-20

SHEET 1 of 3

REVISIONS: Removed note in Detail 'C' that allowed the Contractor to trench through Modified Subbase.

Deanna Maifield

APPROVED BY DESIGN METHODS ENGINEER

DOUBLE REINFORCED 12" APPROACH

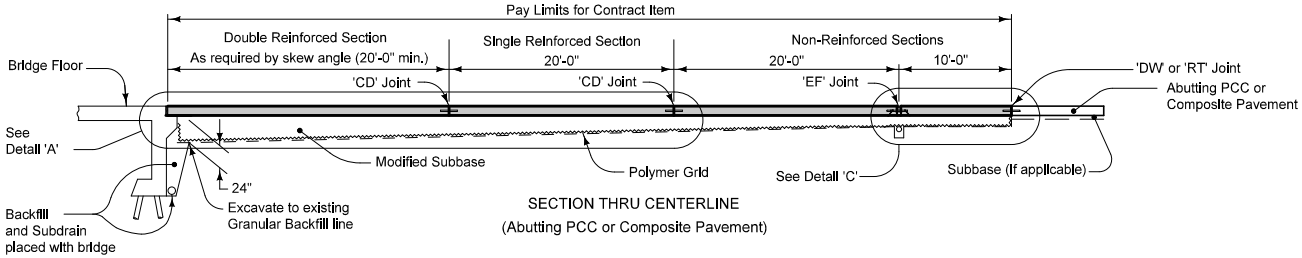

SECTION THRU CENTERLINE
(Abutting PCC or Composite Pavement)

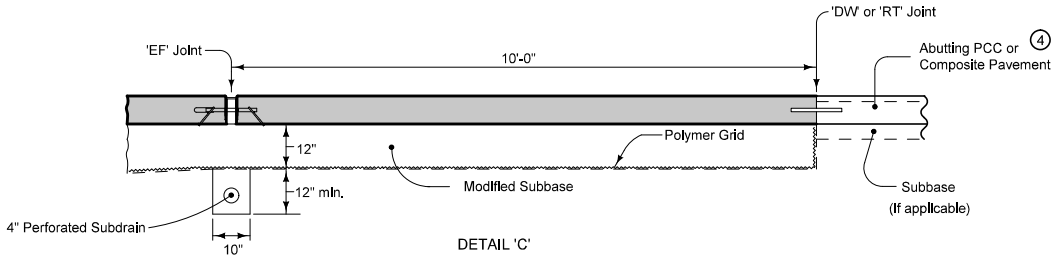

DETAIL 'C'
(Doweled PCC Pavement)

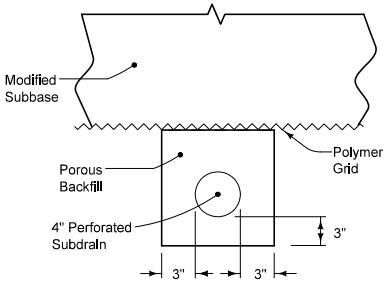

4" SUBDRAIN LOCATION

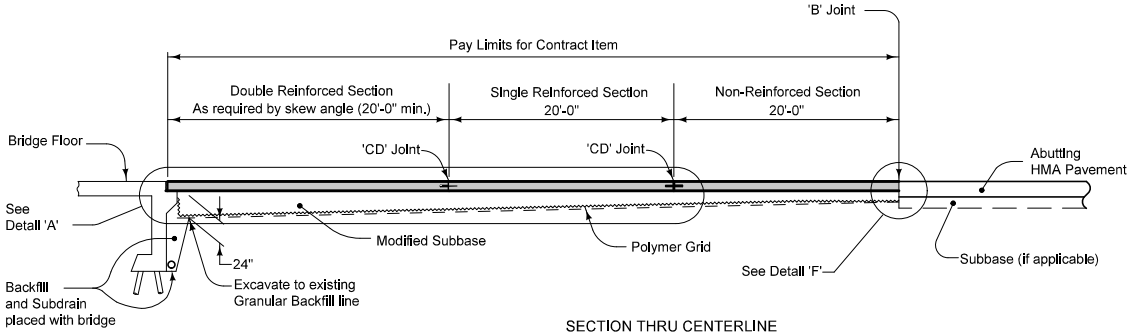

SECTION THRU CENTERLINE
(Abutting HMA Pavement)

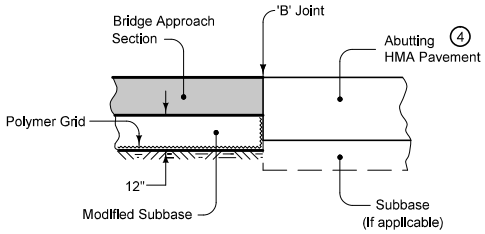

DETAIL 'F'

4 If abutting pavement (PCC or HMA) is not in place, refer to RK-30.

Iowa Department of Transportation

STANDARD ROAD PLAN

REVISION	
9	04-17-12

RK-20

SHEET 2 of 3

REVISIONS: Removed note in Detail 'C' that allowed the Contractor to trench through Modified Subbase.

Deanna Maifield
APPROVED BY DESIGN METHODS ENGINEER

DOUBLE REINFORCED 12" APPROACH

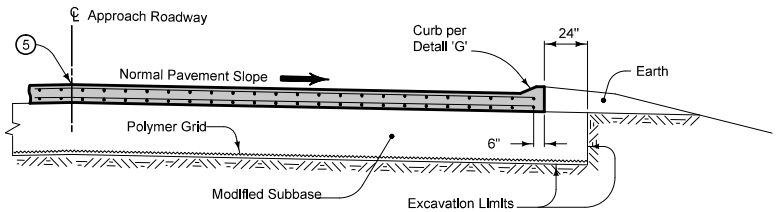

SECTION A-A 6

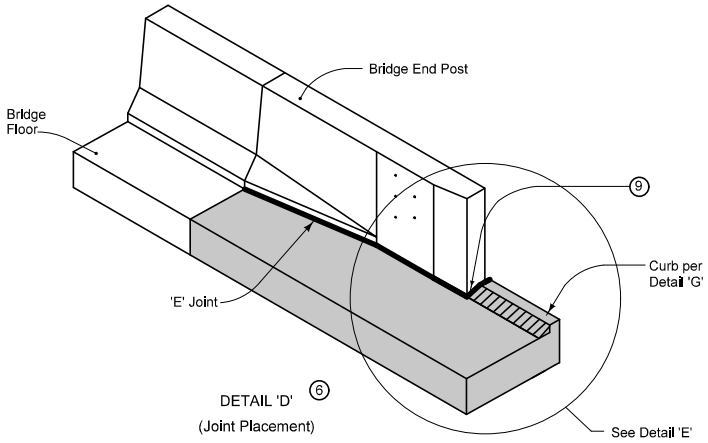

DETAIL 'D' 6
(Joint Placement)

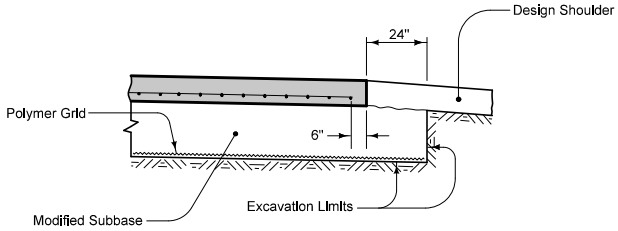

SECTION B-B 6

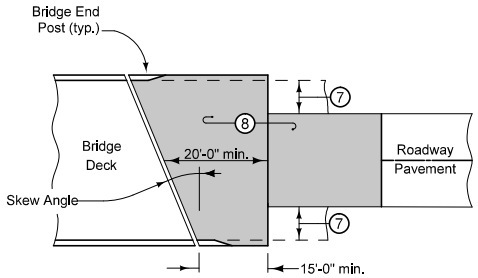

APPROACH PAVEMENT
LAYOUT AT A SKEW

5 Longitudinal Joint: (PV-101)
Single pour - Saw cut joint per Detail B.
Two pours - Use 'KS-2' Joint

6 Refer to RK-21, RK-22, or RK-23.

7 Design shoulder width.

8 Reinforced bridge approach section.

9 Expansion joint at end of bridge end post: Place joint filler the full depth of the bridge approach pavement. In areas with curb, place full depth of pavement plus curb and shape material to fit the shape of the curb per Section B-B of PV-101. Seal joint per Detail F of PV-101.

- Fixed Abutment Bridges:Type 'E' Joint

- Moveable Abutment Bridges: Flexible Foam Expansion Joint Filler in accordance with Specification Section 4136. Minimum filler width is the abutment 'CF' joint width. Joint length as required to completely fill from back side of curb to front face of bridge wing.

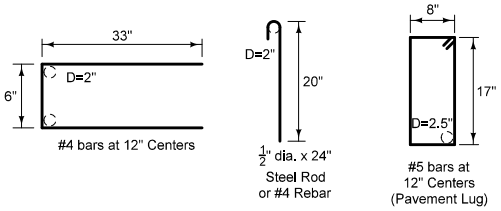

BENT BAR SHAPES

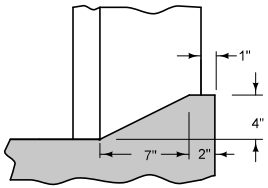

DETAIL 'G'

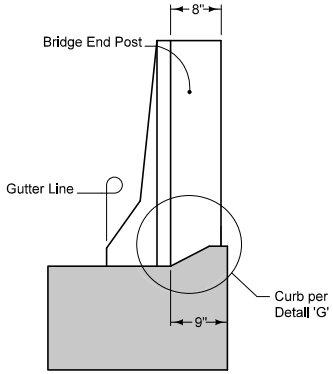

DETAIL 'E'
(Back of Curb Placement)

Iowa Department of Transportation

STANDARD ROAD PLAN

REVISION	
9	04-17-12

RK-20

SHEET 3 of 3

REVISIONS: Removed note In Detail 'C' that allowed the Contractor to trench through Modified Subbase.

Deanna Maifield
APPROVED BY DESIGN METHODS ENGINEER

DOUBLE REINFORCED 12" APPROACH

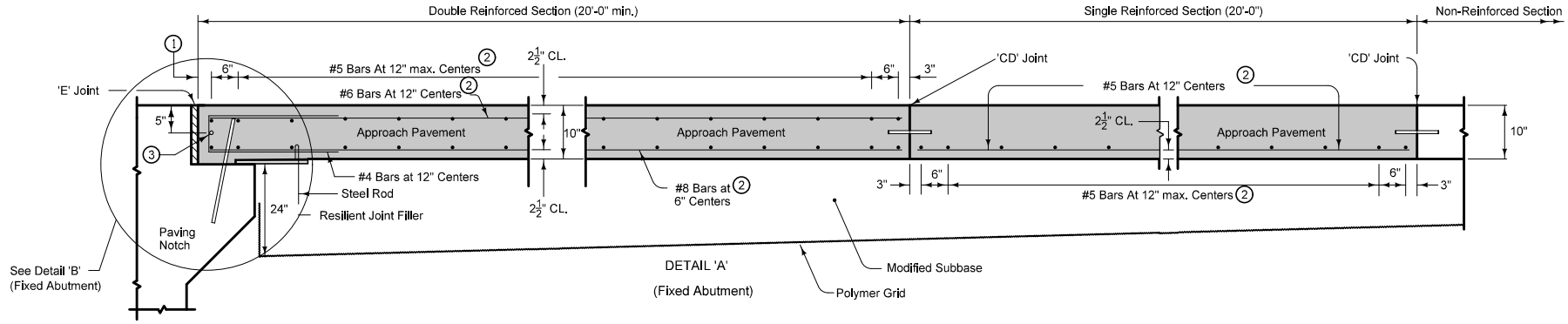

DETAIL 'A'

(Fixed Abutment)

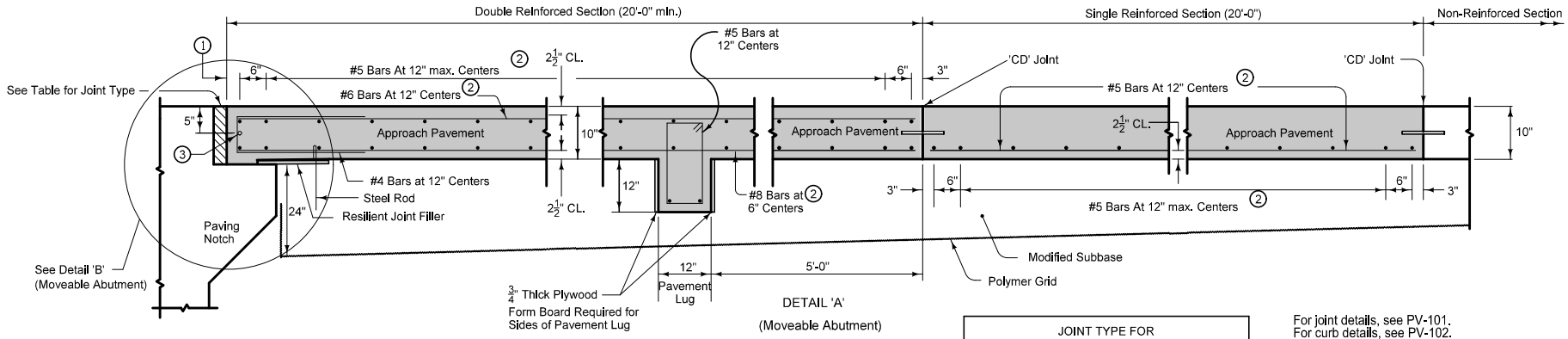

DETAIL 'A'

(Moveable Abutment)

JOINT TYPE FOR MOVEABLE ABUTMENT BRIDGES		
Joint	Maximum Bridge Length	
	Concrete Beam or Slab	Steel Girder
CF-1	370'	250'
CF-2	465'	320'
CF-3	575'	400'

For joint details, see PV-101.
For curb details, see PV-102.

All transverse bars are #5.

Possible Contract Item:

Bridge Approach, RK-25

Possible Tabulation:

112-6

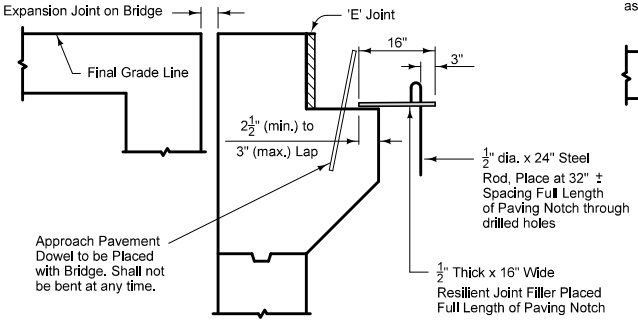

DETAIL 'B' (Fixed Abutment)

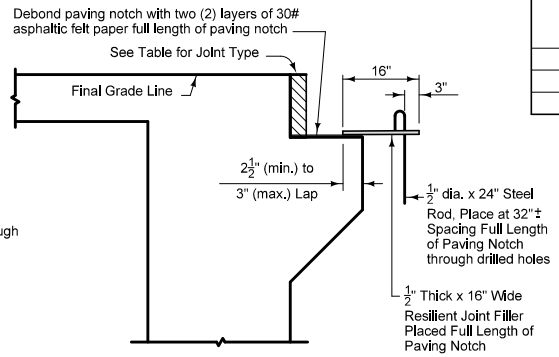

DETAIL 'B' (Moveable Abutment)

1. 2" min. to 2 1/2" max. clear to bent bar.
2. Minimum lap length: #5 Bars - 18"
   #6 Bars - 27"
   #8 Bars - 48"
3. If bridge is skewed, place additional #5 bar parallel to skewed face.

Iowa Department of Transportation

STANDARD ROAD PLAN

REVISION	
9	04-17-12

RK-25

SHEET 1 of 3

REVISIONS: Removed note In Detail 'C' that allowed the contractor to trench through Modified Subbase.

Deanna Maifield
APPROVED BY DESIGN METHODS ENGINEER

DOUBLE REINFORCED 10" APPROACH

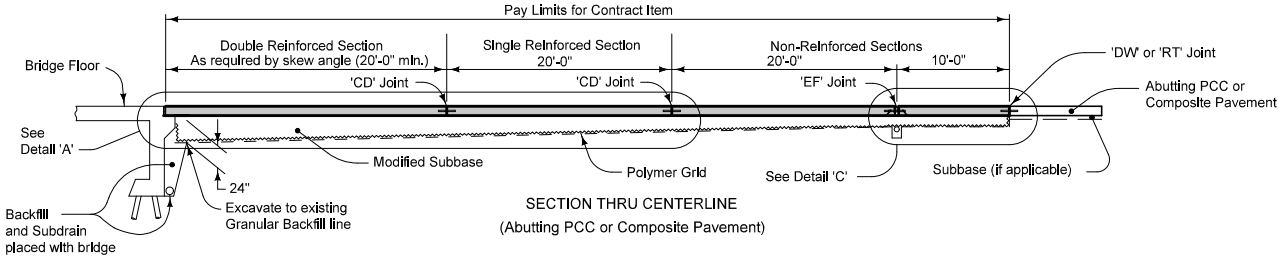

SECTION THRU CENTERLINE
(Abutting PCC or Composite Pavement)

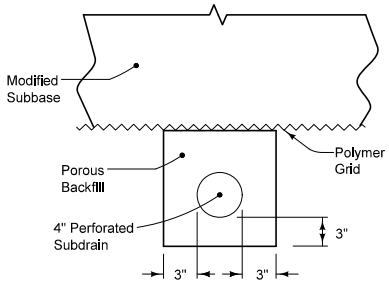

4" SUBDRAIN LOCATION

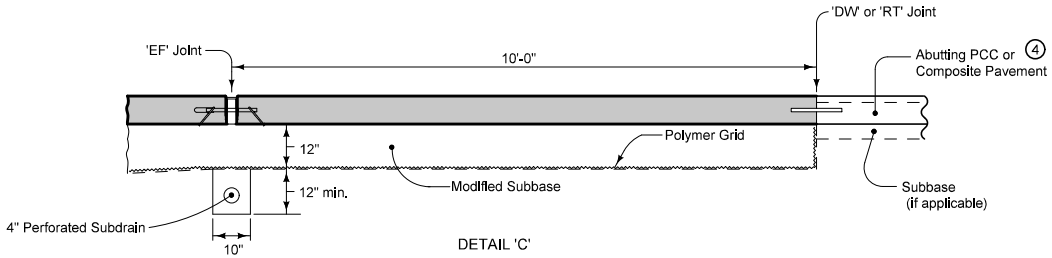

DETAIL 'C'
(Doweled PCC Pavement)

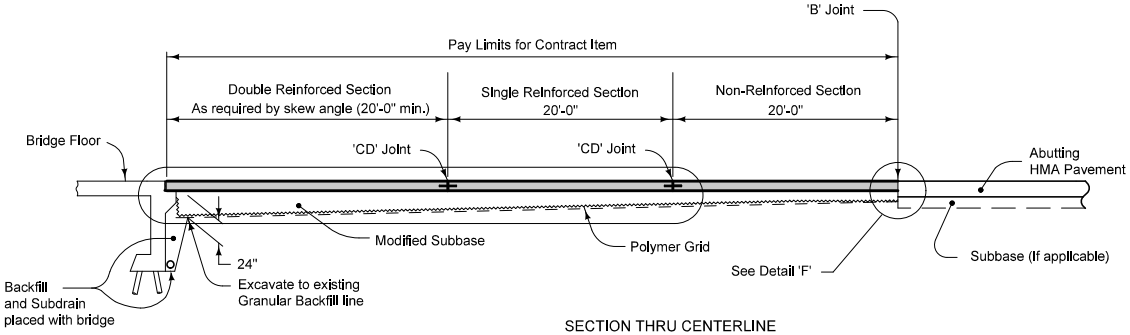

SECTION THRU CENTERLINE
(Abutting HMA Pavement)

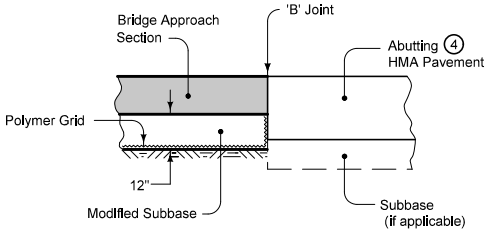

DETAIL 'F'

4 If abutting pavement (PCC or HMA) is not in place, see RK-30.

Iowa Department of Transportation

STANDARD ROAD PLAN

REVISION	
9	04-17-12

RK-25

SHEET 2 of 3

REVISIONS: Removed note in Detail 'C' that allowed the contractor to trench through Modified Subbase.

Deanna Maifield
APPROVED BY DESIGN METHODS ENGINEER

DOUBLE REINFORCED 10" APPROACH

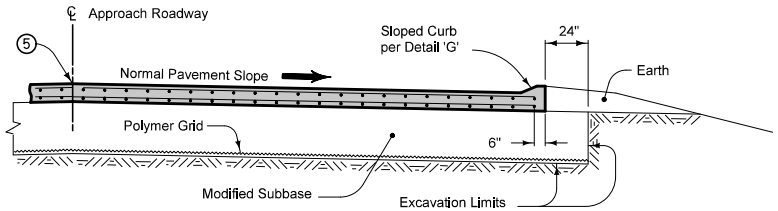

SECTION A-A 6

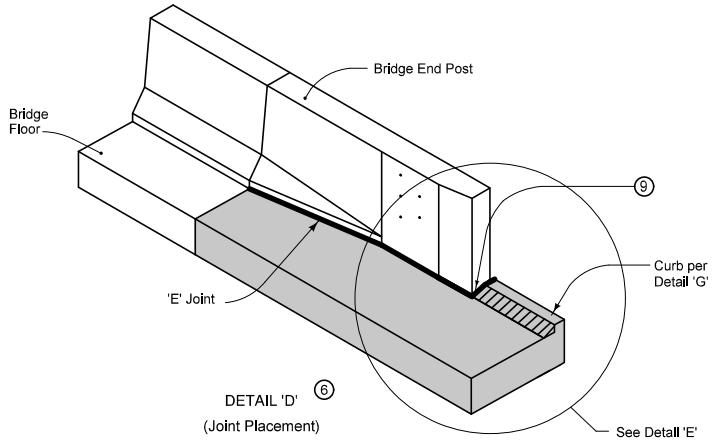

DETAIL 'D' 6

(Joint Placement)

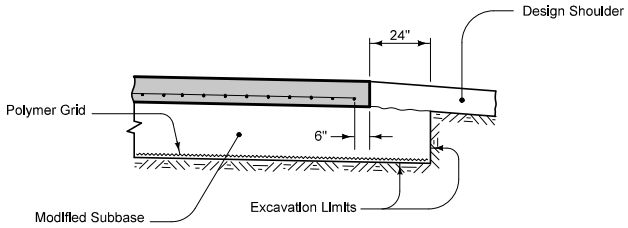

SECTION B-B 6

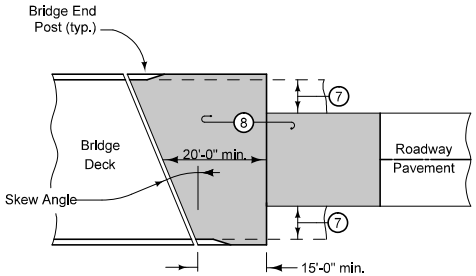

APPROACH PAVEMENT
LAYOUT AT A SKEW

5 Longitudinal Joint: (PV-101)
Single pour — Saw cut joint per Detail B.
Two pours — Use 'KS-2' Joint

6 See RK-21, RK-22, or RK-23.

7 Design shoulder width.

8 Reinforced bridge approach section.

9 Expansion joint at end of bridge end post: Place joint filler the full depth of the bridge approach pavement. In areas with curb, place full depth of pavement plus curb and shape material to fit the shape of the curb per Section B-B of PV-101. Seal joint per Detail F of PV-101.

- Fixed Abutment Bridges:Type 'E' Joint

- Moveable Abutment Bridges: Flexible Foam Expansion Joint Filler in accordance with Specification Section 4136. Minimum filler width is the abutment 'CF' joint width. Joint length as required to completely fill from back side of curb to front face of bridge wing.

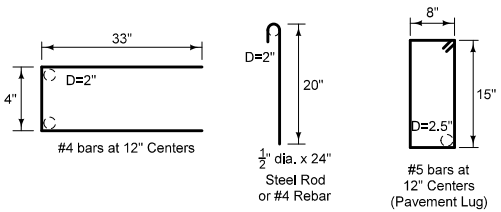

BENT BAR SHAPES

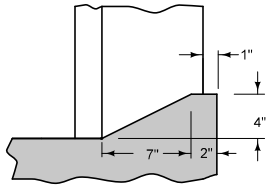

DETAIL 'G'

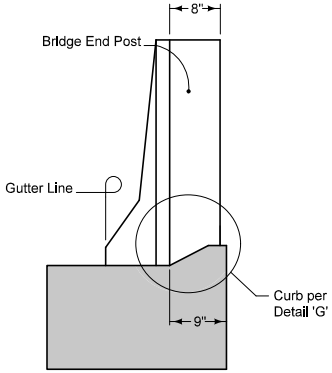

DETAIL 'E'

(Back of Curb Placement)

Iowa Department of Transportation

STANDARD ROAD PLAN

REVISION	
9	04-17-12

RK-25

SHEET 3 of 3

REVISIONS: Removed note In Detail 'C' that allowed the contractor to trench through Modified Subbase.

Deanna Maifield
APPROVED BY DESIGN METHODS ENGINEER

DOUBLE REINFORCED 10" APPROACH

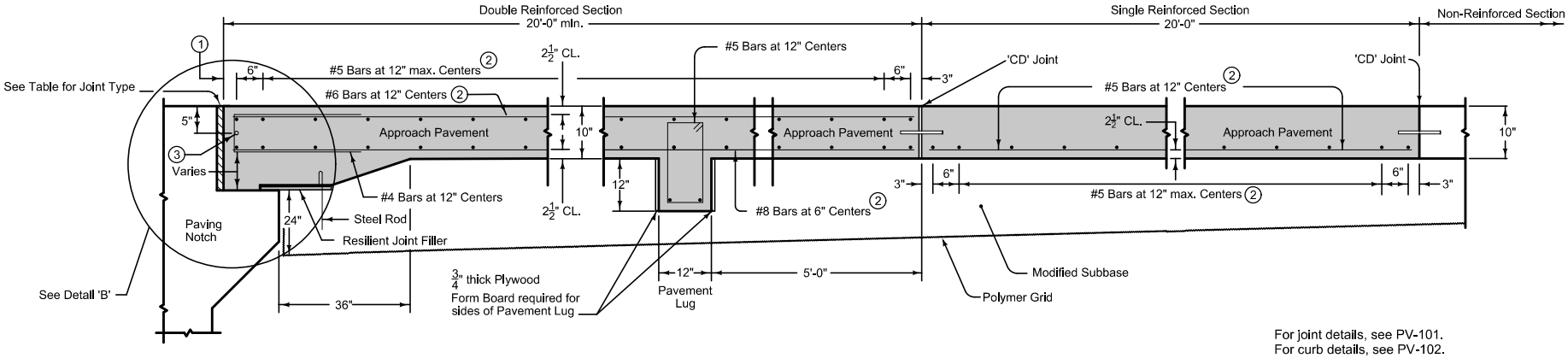

DETAIL 'A'

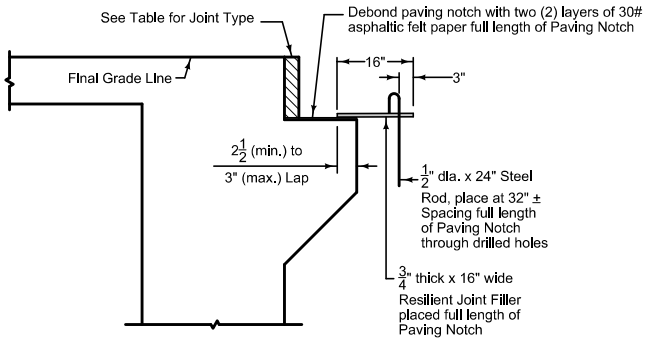

DETAIL 'B'

For joint details, see PV-101.
For curb details, see PV-102.

All Transverse Bars are #5.

See RK-21 or RK-22 for shoulders.

(1) 2" to 2½" clear to bent bar.

(2) Minimum lap length: #5 bars - 18 inches
#6 bars - 27 inches
#8 bars - 48 inches

(3) If bridge is skewed, place additional #5 bar parallel to skewed face.

Possible Contract Item:
Bridge Approach, RK-26

Possible Tabulation:
112-6

JOINT TYPE FOR MOVEABLE ABUTMENT BRIDGES		
Joint	Maximum Bridge Length	
	Concrete Beam or Slab	Steel Girder
CF-1	370'	250'
CF-2	465'	320'
CF-3	575'	400'

MOVEABLE ABUTMENT

Iowa Department of Transportation

STANDARD ROAD PLAN

REVISION	
8	04-17-12

RK-26

SHEET 1 of 4

REVISIONS: Removed note in Detail 'C' that allowed the contractor to trench through Modified Subbase.

Deanna Maifield
APPROVED BY DESIGN METHODS ENGINEER

DOUBLE REINFORCED 10" APPROACH WITH VARIABLE DEPTH PAVING NOTCH

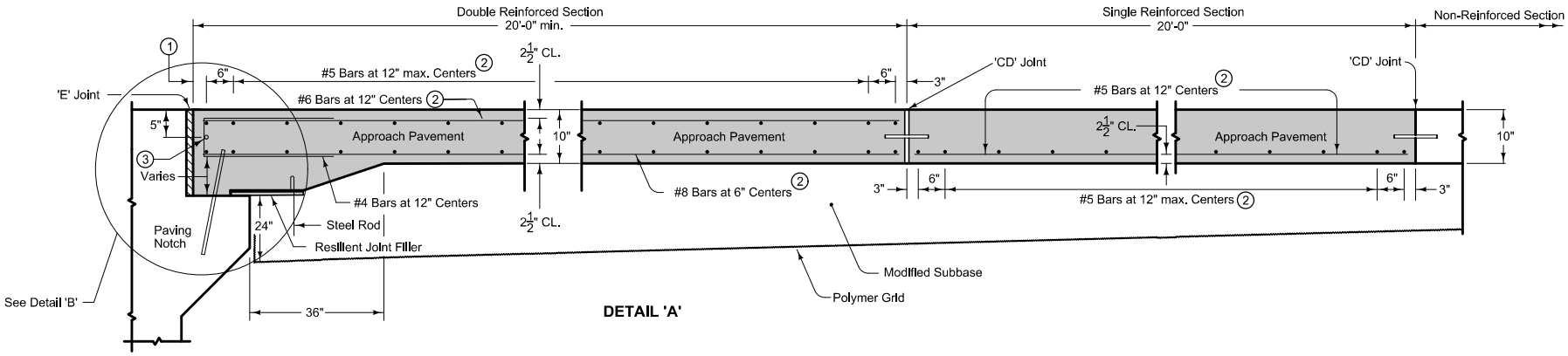

1. 2" to $2\frac{1}{2}$" clear to bent bar.
2. Minimum lap length: #5 bars - 18 inches
   #6 bars - 27 inches
   #8 bars - 48 inches
3. If bridge is skewed, place additional #5 bar parallel to skewed face.

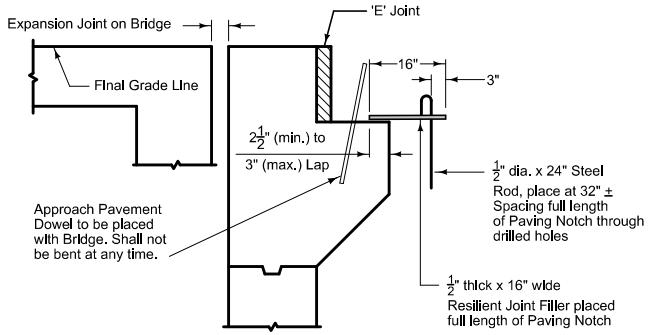

FIXED ABUTMENT

Iowa Department of Transportation

STANDARD ROAD PLAN

REVISION	
8	04-17-12

RK-26

SHEET 2 of 4

REVISIONS: Removed note in Detail 'C' that allowed the contractor to trench through Modified Subbase.

Deanna Maifield
APPROVED BY DESIGN METHODS ENGINEER

DOUBLE REINFORCED 10" APPROACH WITH VARIABLE DEPTH PAVING NOTCH

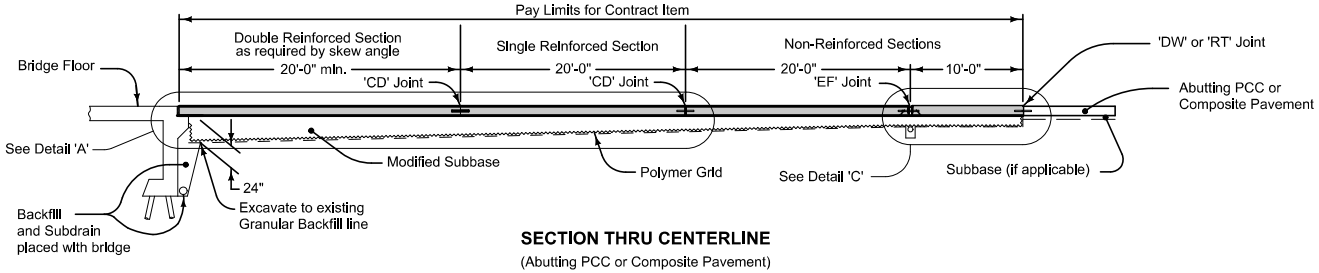

SECTION THRU CENTERLINE

(Abutting PCC or Composite Pavement)

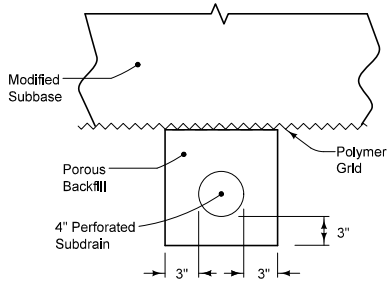

4" SUBDRAIN LOCATION

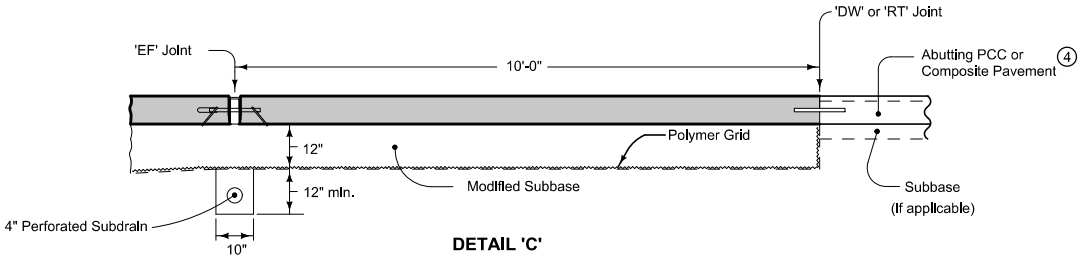

DETAIL 'C'

(Doweled PCC Pavement)

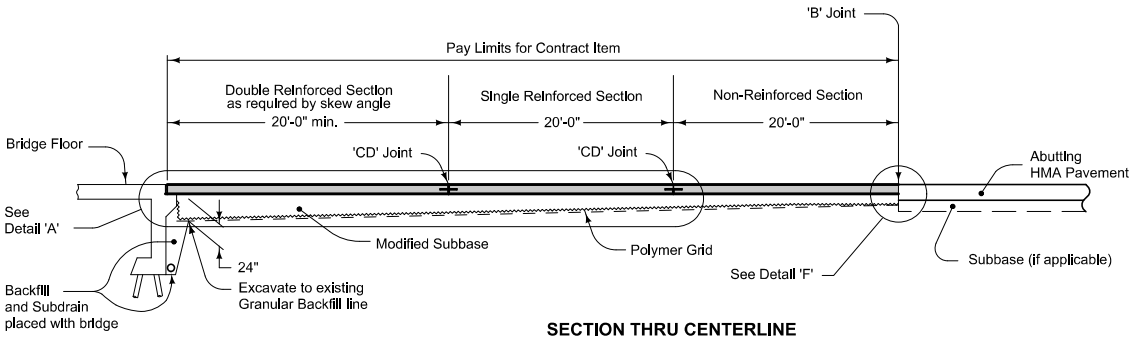

SECTION THRU CENTERLINE

(Abutting HMA Pavement)

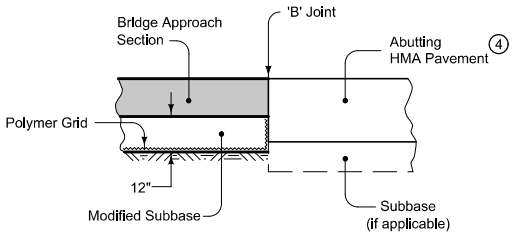

DETAIL 'F'

4 If abutting pavement (PCC or HMA) is not in place, see RK-30.

Iowa Department of Transportation

STANDARD ROAD PLAN

REVISION	
8	04-17-12

RK-26

SHEET 3 of 4

REVISIONS: Removed note in Detail 'C' that allowed the contractor to trench through Modified Subbase.

Deanna Maifield

APPROVED BY DESIGN METHODS ENGINEER

DOUBLE REINFORCED 10" APPROACH WITH VARIABLE DEPTH PAVING NOTCH

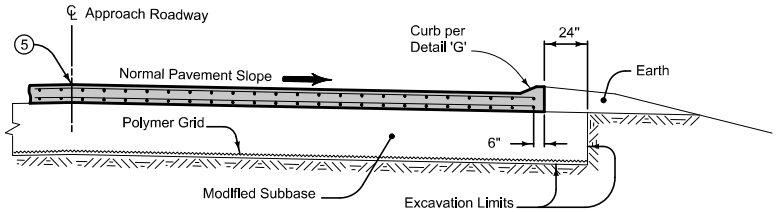

SECTION A-A 6

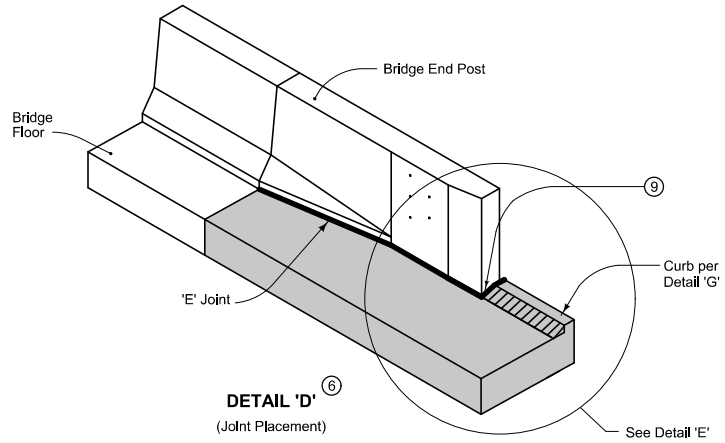

DETAIL 'D' 6
(Joint Placement)

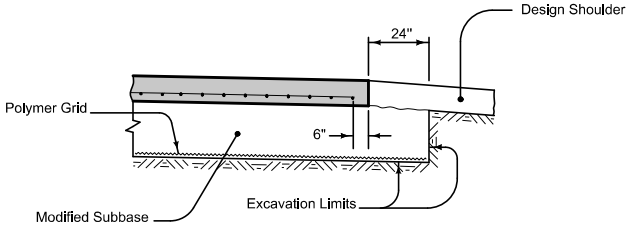

SECTION B-B 6

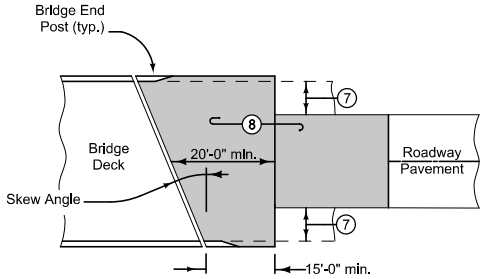

APPROACH PAVEMENT LAYOUT AT A SKEW

5 Longitudinal Joint: (PV-101)
Single pour - Saw cut joint per Detail B
Two pours - use 'KS-2' Joint

6 See RK-21, RK-22, or RK-23.

7 Design shoulder width.

8 Reinforced bridge approach section.

9 Expansion joint at end of bridge end post: Place joint filler the full depth of the bridge approach pavement. In areas with curb, place full depth of pavement plus curb and shape material to fit the shape of the curb per Section B-B of PV-101. Seal joint per Detail F of PV-101.

- Fixed Abutment Bridges:Type 'E' Joint

- Moveable Abutment Bridges: Flexible Foam Expansion Joint Filler in accordance with Specification Section 4136. Minimum filler width is the abutment 'CF' joint width. Joint length as required to completely fill from back side of curb to front face of bridge wing.

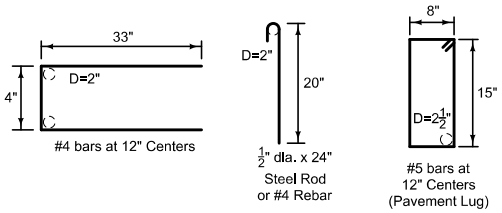

BENT BAR SHAPES

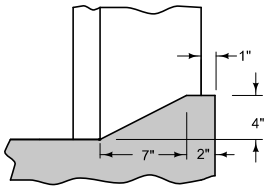

DETAIL 'G'

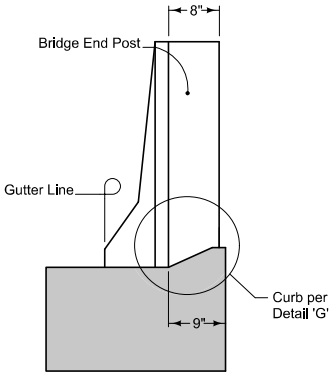

DETAIL 'E'
(Back of Curb Placement)

Iowa Department of Transportation

STANDARD ROAD PLAN

REVISION	
8	04-17-12

RK-26

SHEET 4 of 4

REVISIONS: Removed note In Detail 'C' that allowed the contractor to trench through Modified Subbase.

Deanna Maifield
APPROVED BY DESIGN METHODS ENGINEER

DOUBLE REINFORCED 10" APPROACH WITH VARIABLE DEPTH PAVING NOTCH

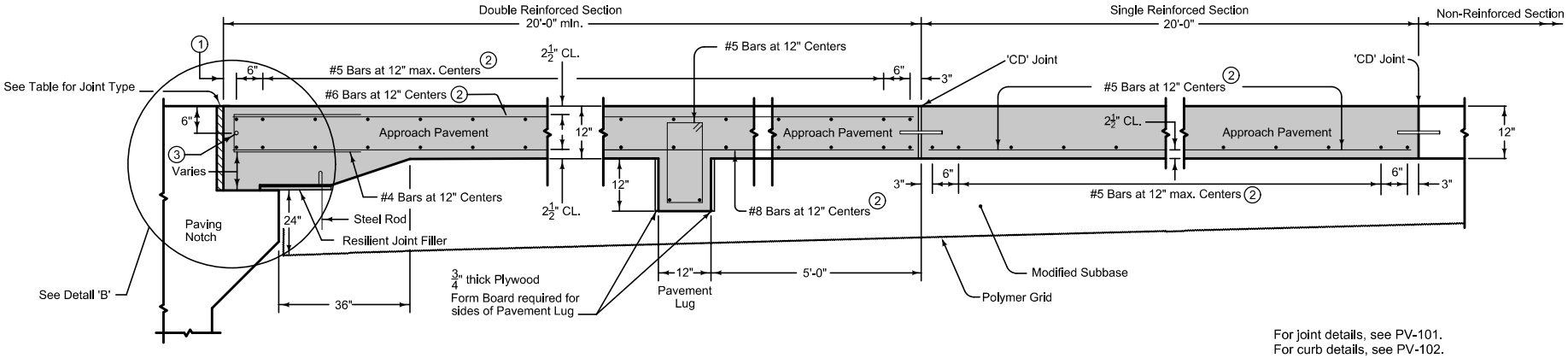

DETAIL 'A'

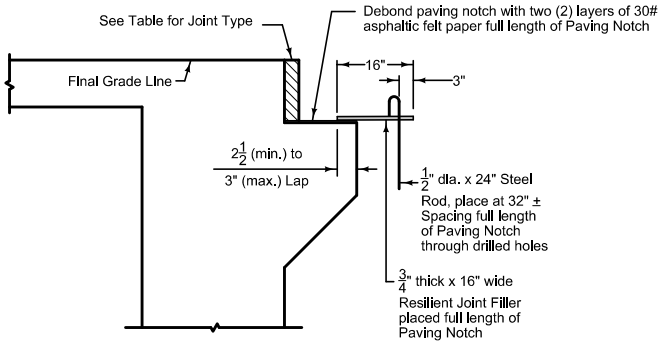

DETAIL 'B'

For joint details, see PV-101.
For curb details, see PV-102.

All Transverse Bars are #5.

See RK-21 or RK-22 for shoulders.

(1) 2" to 2½" clear to bent bar.

(2) Minimum lap length: #5 bars - 18 inches
#6 bars - 27 inches
#8 bars - 48 inches

(3) If bridge is skewed, place additional #5 bar parallel to skewed face.

Possible Contract Item:
Bridge Approach, RK-27

Possible Tabulation:
112-6

JOINT TYPE FOR MOVEABLE ABUTMENT BRIDGES		
Joint	Maximum Bridge Length	
	Concrete Beam or Slab	Steel Girder
CF-1	370'	250'
CF-2	465'	320'
CF-3	575'	400'

MOVEABLE ABUTMENT

Iowa Department of Transportation

STANDARD ROAD PLAN

REVISION	
1	04-17-12

RK-27

SHEET 1 of 4

REVISIONS: Removed note in Detail 'C' that allowed the contractor to trench through Modified Subbase.

Deanna Maifield
APPROVED BY DESIGN METHODS ENGINEER

DOUBLE REINFORCED 12" APPROACH WITH VARIABLE DEPTH PAVING NOTCH

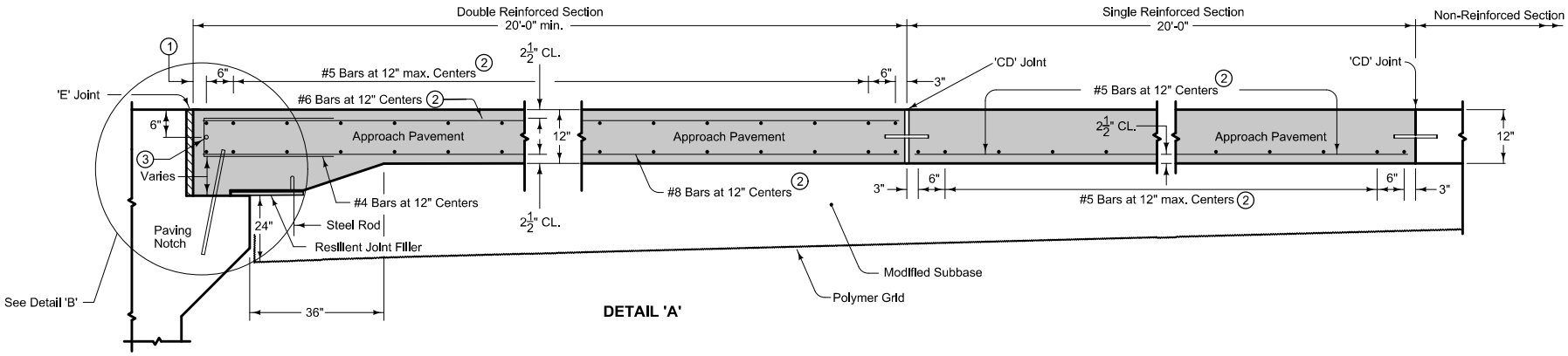

DETAIL 'A'

1. 2" to $2\frac{1}{2}$" clear to bent bar.
2. Minimum lap length: #5 bars - 18 inches
   #6 bars - 27 inches
   #8 bars - 48 inches
3. If bridge is skewed, place additional #5 bar parallel to skewed face.

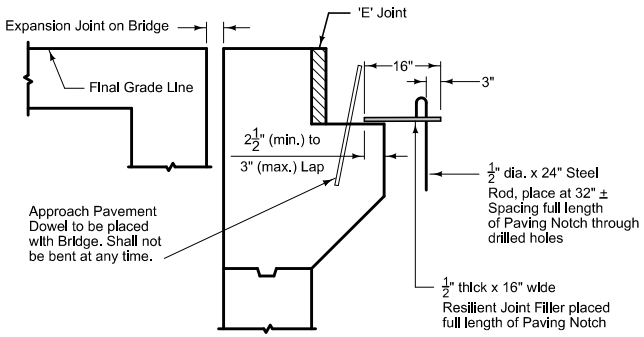

DETAIL 'B'

FIXED ABUTMENT

Iowa Department of Transportation

STANDARD ROAD PLAN

REVISION	
1	04-17-12

RK-27

SHEET 2 of 4

REVISIONS: Removed note in Detail 'C' that allowed the contractor to trench through Modified Subbase.

Deanna Maifield
APPROVED BY DESIGN METHODS ENGINEER

DOUBLE REINFORCED 12" APPROACH WITH VARIABLE DEPTH PAVING NOTCH

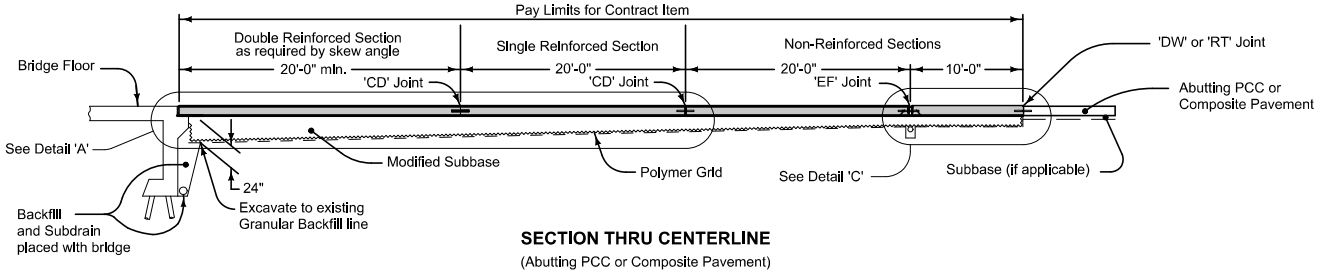

SECTION THRU CENTERLINE

(Abutting PCC or Composite Pavement)

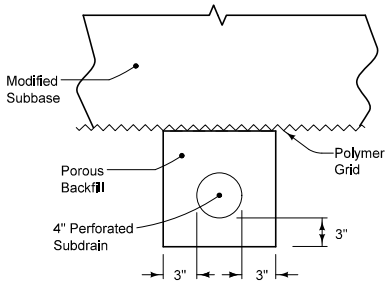

4" SUBDRAIN LOCATION

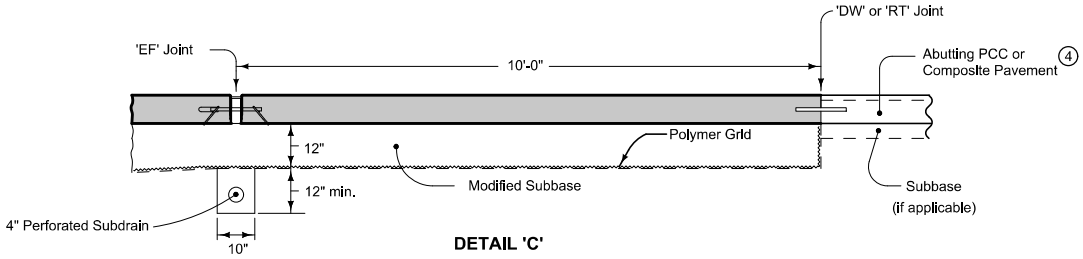

DETAIL 'C'

(Doweled PCC Pavement)

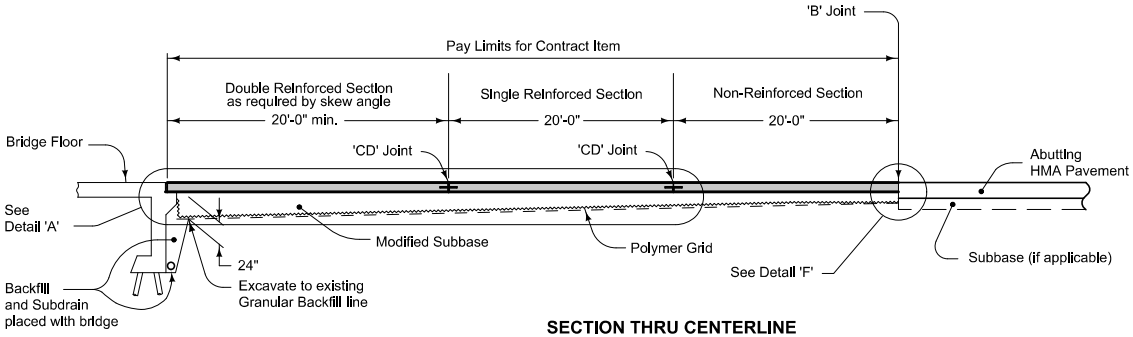

SECTION THRU CENTERLINE

(Abutting HMA Pavement)

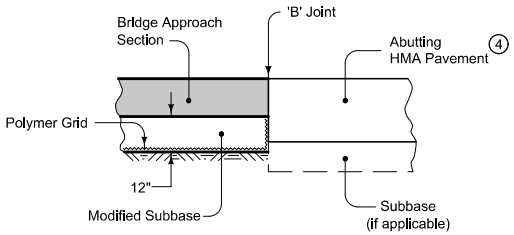

DETAIL 'F'

4 If abutting pavement (PCC or HMA) is not in place, see RK-30.

Iowa Department of Transportation

STANDARD ROAD PLAN

REVISION	
1	04-17-12

RK-27

SHEET 3 of 4

REVISIONS: Removed note in Detail 'C' that allowed the contractor to trench through Modified Subbase.

Deanna Maifield

APPROVED BY DESIGN METHODS ENGINEER

DOUBLE REINFORCED 12" APPROACH WITH VARIABLE DEPTH PAVING NOTCH

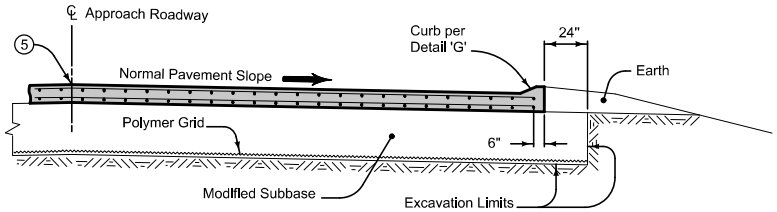

SECTION A-A 6

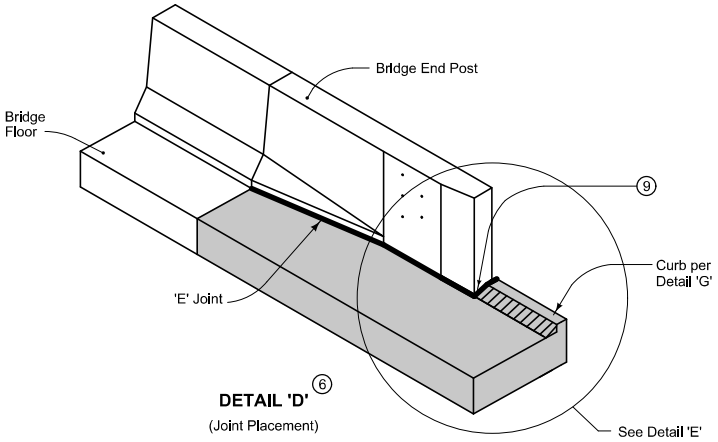

DETAIL 'D' 6

(Joint Placement)

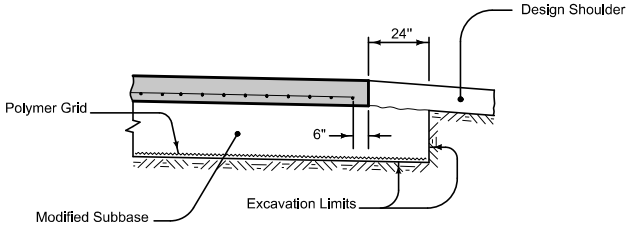

SECTION B-B 6

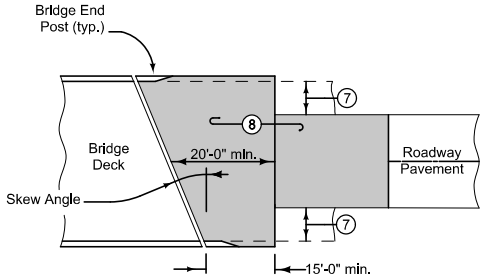

APPROACH PAVEMENT LAYOUT AT A SKEW

5 Longitudinal Joint: (PV-101)
Single pour - Saw cut joint per Detail B
Two pours - use 'KS-2' Joint

6 See RK-21, RK-22, or RK-23.

7 Design shoulder width.

8 Reinforced bridge approach section.

9 Expansion joint at end of bridge end post: Place joint filler the full depth of the bridge approach pavement. In areas with curb, place full depth of pavement plus curb and shape material to fit the shape of the curb per Section B-B of PV-101. Seal joint per Detail F of PV-101.

- Fixed Abutment Bridges:Type 'E' Joint

- Moveable Abutment Bridges: Flexible Foam Expansion Joint Filler in accordance with Specification Section 4136. Minimum filler width is the abutment 'CF' joint width. Joint length as required to completely fill from back side of curb to front face of bridge wing.

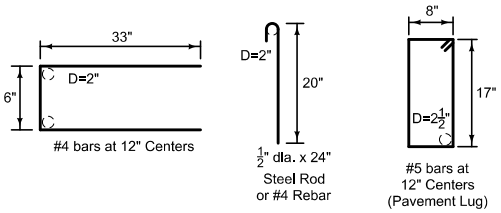

BENT BAR SHAPES

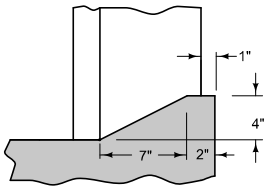

DETAIL 'G'

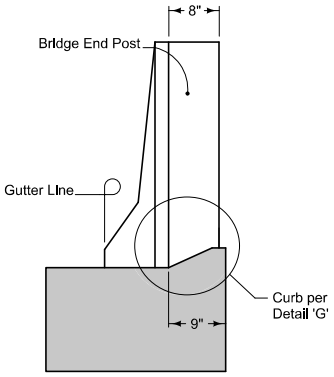

DETAIL 'E'

(Back of Curb Placement)

Iowa Department of Transportation

STANDARD ROAD PLAN

REVISION	
1	04-17-12

RK-27

SHEET 4 of 4

REVISIONS: Removed note In Detail 'C' that allowed the contractor to trench through Modified Subbase.

Deanna Maifield
APPROVED BY DESIGN METHODS ENGINEER

DOUBLE REINFORCED 12" APPROACH WITH VARIABLE DEPTH PAVING NOTCH

SECTION

Pavement Rehabilitation

RR

NO.	DATE	TITLE
RR-1	04-17-12	Full Depth Patch with 'EF' joint in PCC
RR-2	04-19-11	Full Depth PCC Patch without Dowels
RR-4	04-19-11	Full Depth PCC Patch with Dowels
RR-18	04-19-11	Full Depth Patch Continuous Reinforced P.C. Concrete Pavement
RR-21	10-17-06	PCC Crack and Joint Cleaning and Sealing
RR-23	04-19-11	Double Reinforced Pavement Over Box Culverts
RR-24	04-19-11	Reinforced Concrete Panel at Box Culverts
RR-25	10-18-05	HMA Wedge for Superelevation
RR-26	04-19-11	Subbase Patches

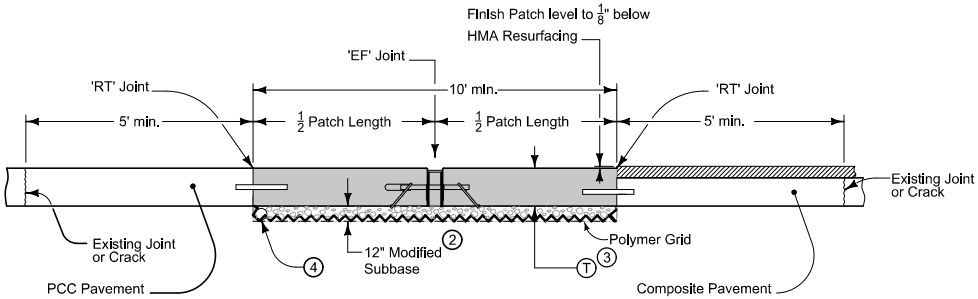

SECTION A-A

DOWELED PCC PAVEMENT

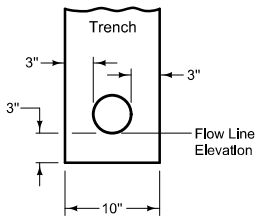

DRAIN PLACEMENT 4

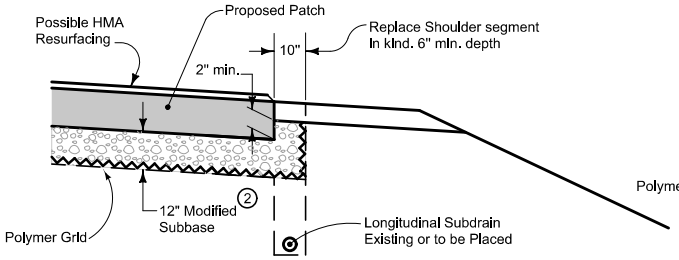

MODIFIED SUBBASE AND SUBDRAIN

IF LONGITUDINAL SUBDRAIN IS PRESENT OR IS TO BE PLACED

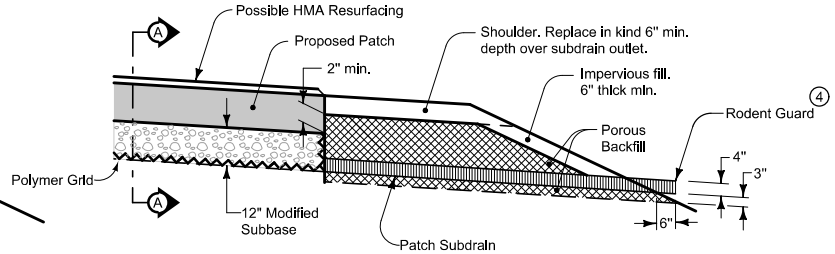

MODIFIED SUBBASE AND SUBDRAIN 4

WITHOUT LONGITUDINAL SUBDRAIN

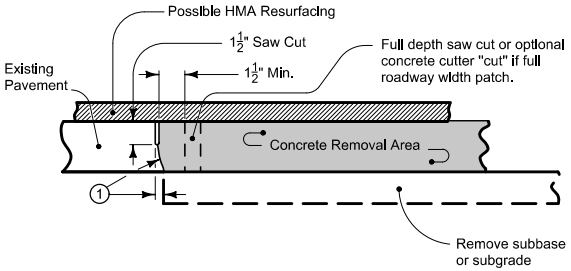

PAVEMENT REMOVAL DETAILS

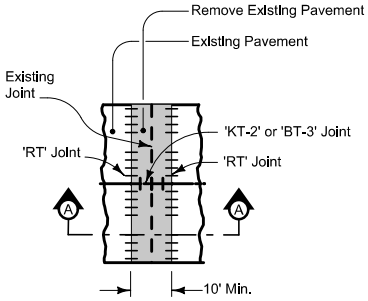

FULL ROADWAY WIDTH PATCH

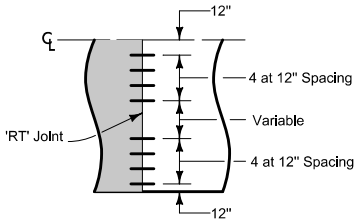

TYPICAL HALF PLAN

Place Full Depth Patch with 'EF' Joint after the final lift of asphalt has been placed. Porous Backfill and Subdrain may be placed prior to construction of resurfacing of shoulders.

Place Full Depth Patch according to Full Depth Patch specifications and Standard Road Plan **RR-4**, except as noted on this sheet.

Place Full Depth Patch and 'EF' Joint full width of the roadway. If roadway has PCC shoulders, extend 'CF' joint across shoulder. Cost of placing 'CF' joint is incidental to 'EF' joint.

See **PV-101** for joint and bar placement details.

1. Break out concrete within 1 1/2" of saw cut with hand tools to ensure near vertical face with minimal undercut or protrusion. No need to remove protrusions smaller than 2 inches if uniformly tapered from bottom of saw cut to bottom of pavement. A step or ledge on this face is not allowed.
2. 12 inches Modified Subbase is required under Full Depth Patch with 'EF' Joint. Extend Modified Subbase over longitudinal subdrain, if present.
3. Unless otherwise noted in the plans, depth of patch, T, is 12 inches regardless of existing pavement thickness.
4. If longitudinal subdrain (shoulder) is not to be placed or if it is not present on side of roadway to be patched, then place Patch Subdrain at low end(s) of patch. Use removable grate rodent guard except for projects using recycled PCC subbase where a removable fork rodent guard is required. Refer to **RF-19E** for rodent guard details. Refer to Drain Placement detail.

Possible Contract Items:
- Joint Assembly, EF
- Patches, Full-Depth Repair
- Patches by Count (Repair)
- Patches, Full-Depth Finish, by Area
- Patches, Full-Depth Finish, by Count
- Patch Subdrain
- Subbase Patch with EF Joint

Possible Tabulation:
- 102-6C

Iowa Department of Transportation

REVISION	
5	04-17-12

STANDARD ROAD PLAN

RR-1

SHEET 1 of 1

REVISIONS: Increased minimum patch length from 6' to 10' and added Polymer Grid under Subbase Patch.

Deanna Maifield

APPROVED BY DESIGN METHODS ENGINEER

FULL DEPTH PATCH WITH 'EF' JOINT IN PCC

SECTION

SW

Storm and Sanitary Sewers

NO.	DATE	TITLE
		Trench and Backfill
SW-101	04-21-09	Trench Bedding and Backfill Zones
SW-102	04-21-09	Rigid Gravity Pipe Trench Bedding
SW-103	04-21-09	Flexible Gravity Pipe Trench Bedding
SW-104	04-21-09	Pressure Pipe Trench Bedding
SW-105	10-20-09	Miscellaneous Pipe Bedding
		General Sewer
SW-201	04-21-09	Sanitary Sewer Service Stub
SW-202	04-21-09	Sewage Air Release Valve Pit
SW-203	10-20-09	Sanitary Sewer Cleanout
SW-211	04-21-09	Special Pipe Connections for Storm Sewer
		Sanitary Sewer Manholes
SW-301	04-21-09	Circular Sanitary Sewer Manhole
SW-302	04-21-09	Rectangular Sanitary Sewer Manhole
SW-303	04-21-09	Sanitary Sewer Manhole over Existing Sewer
SW-304	04-17-12	Rectangular Base/Circular Top Sanitary Sewer Manhole
SW-305	04-21-09	Tee-Section Sanitary Sewer Manhole
SW-306	04-21-09	Chimney Seals for Sanitary Sewer Manholes
SW-307	04-21-09	Drop Connection for Sanitary Sewer
SW-350	10-20-09	Travel Trailer Dump Station
		Storm Sewer Manholes
SW-401	04-21-09	Circular Storm Sewer Manhole
SW-402	04-21-09	Rectangular Storm Sewer Manhole
SW-403	04-21-09	Deep Well Rectangular Storm Sewer Manhole
SW-404	04-17-12	Rectangular Base/Circular Top Storm Sewer Manhole
SW-405	04-21-09	Tee-Section Storm Sewer Manhole

Storm and Sanitary Sewers

NO.	DATE	TITLE
		Storm Sewer Intakes
SW-501	04-21-09	Single Grate Intake
SW-502	04-21-09	Circular Single Grate Intake
SW-503	04-21-09	Single Grate Intake with Manhole
SW-504	04-21-09	Single Grate Intake with Flush-Top Manhole
SW-505	04-21-09	Double Grate Intake
SW-506	04-21-09	Double Grate Intake with Manhole
SW-507	10-20-09	Single Open-Throat Intake, Small Box
SW-508	10-20-09	Single Open-Throat Intake, Large Box
SW-509	10-18-11	Double Open-Throat Curb Intake, Small Box
SW-510	10-18-11	Double Open-Throat Curb Intake, Large Box
SW-511	04-21-09	Rectangular Area Intake
SW-512	10-20-09	Circular Area Intake
SW-513	04-21-09	Open-Sided Area Intake
SW-514	04-21-09	Boxouts for Grate Intakes
SW-541	04-19-11	Open-Throat Curb Intake under Pavement
SW-542	10-20-09	Extension Unit for Open-Throat Curb Intake under Pavement
SW-545	10-18-11	Single Open-Throat Curb Intake with Extended Opening
SW-546	04-19-11	Single Open-Throat Barrier Intake
SW-547	04-19-11	Triple-Grate Barrier Intake
SW-548	04-19-11	Single-Grate Barrier Intake, Circular
SW-549	04-19-11	Single-Grate Barrier Intake, Rectangular
SW-550	04-20-10	Alternate Construction Method (SW-508 and SW-510 Intake)
SW-562	10-20-09	Vertical Throat Area Intake

SECTION

SW

Storm and Sanitary Sewers

NO.	DATE	TITLE
		Castings
SW-601	10-20-09	Castings for Sanitary Sewer Manholes
SW-602	10-20-09	Castings for Storm Sewer Manholes
SW-603	04-17-12	Castings for Grate Intakes
SW-604	10-20-09	Castings for Area Intakes

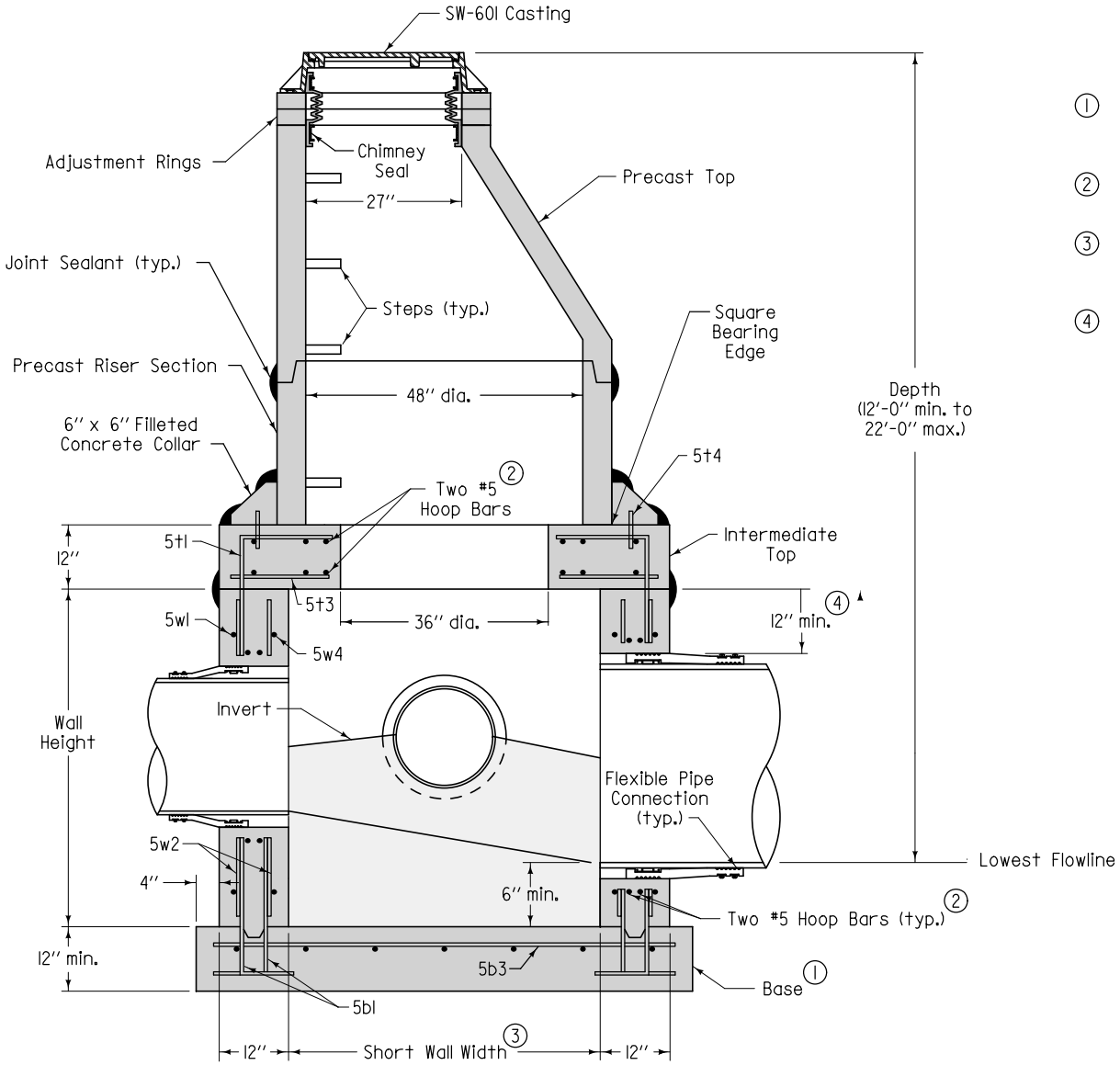

TYPICAL SECTION

Adjacent walls may have different widths based upon pipe configuration, but structure must be rectangular.

1. Cast-in-place base shown. If base is precast integral with walls, the footprint of the base is not required to extend beyond the outer edge of the walls.
2. Provide two #5 hoop bars at intermediate top opening and at all pipe openings.
3. Wall widths vary with pipe diameter and range from 4 feet minimum to 12 feet maximum. Provide 12 inches of wall width (minimum) each side of pipe opening.
4. 12 inch minimum wall height above all pipe openings.

SUDAS	Iowa Department of Transportation	REVISION 1 04-17-12
FIGURE 6010.304	STANDARD ROAD PLAN	SW-304 SHEET 1 of 2

REVISIONS: Modified note 3 on sheet 2.

Paul D. Wiegand, SUDAS DIRECTOR — Deanna Maifield, DESIGN METHODS ENGINEER

RECTANGULAR BASE/ CIRCULAR TOP SANITARY SEWER MANHOLE

FIGURE 6010.304 SHEET 1 OF 2

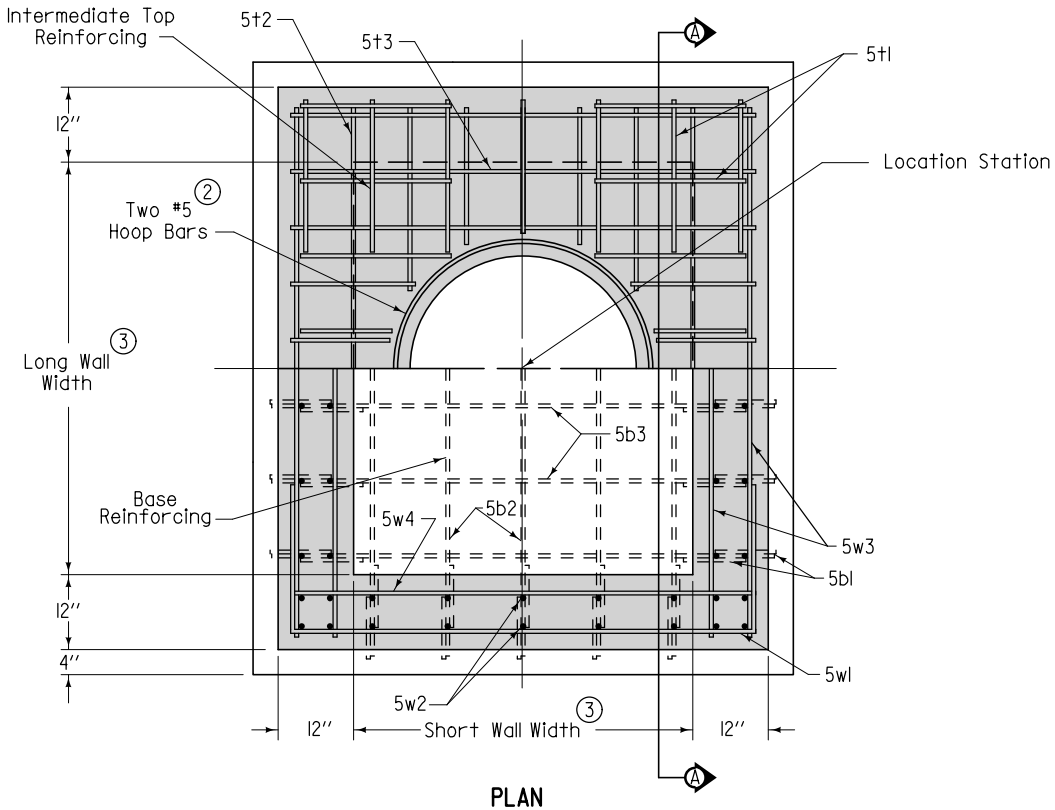

PLAN

2 Provide two #5 hoop bars at intermediate top opening and at all pipe openings.

3 Wall widths vary with pipe diameter and range from 4 feet minimum to 12 feet maximum. Provide 12 inches of wall opening (minimum) each side of pipe opening.

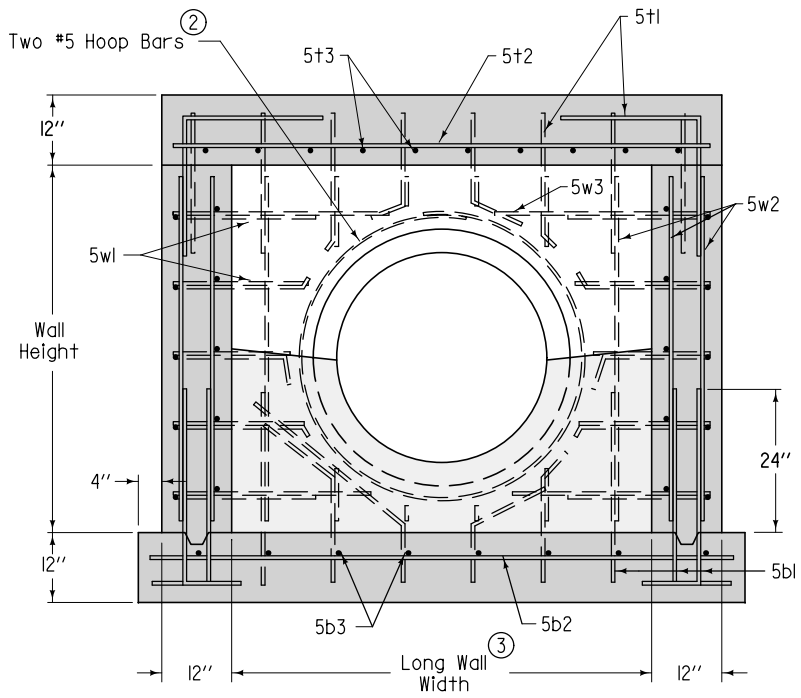

SECTION A-A

REINFORCING BAR LIST					
Mark	Size	Location	Shape	Length	Spacing
5t1	5	Top	L	48''	12''
5t2	5	Top	——	Long Wall plus 20''	9''
5t3	5	Top	——	Short Wall plus 20''	9''
5t4	5	Top	——	8''	12''
5b1	5	Base	L	43''	12''
5b2	5	Base	——	Long Wall plus 26''	12''
5b3	5	Base	——	Short Wall plus 26''	12''
5w1	5	Wall	⊓	Short Wall plus 68''	12''
5w2	5	Wall	——	Wall Height minus 4''	12''
5w3	5	Wall	——	Long Wall plus 20''	12''
5w4	5	Wall	——	Short Wall plus 20''	12''

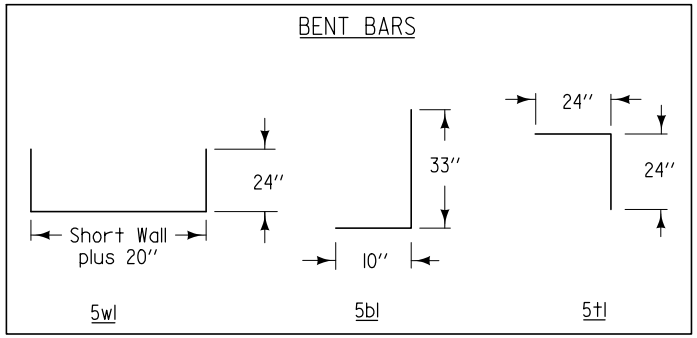

SUDAS	Iowa Department of Transportation	REVISION 1 04-17-12
FIGURE 6010.304	STANDARD ROAD PLAN	SW-304 SHEET 2 of 2

REVISIONS: Modified note 3 on sheet 2.

Paul D. Wiegand — SUDAS DIRECTOR
Deanna Maifeld — DESIGN METHODS ENGINEER

RECTANGULAR BASE/ CIRCULAR TOP SANITARY SEWER MANHOLE

FIGURE 6010.304 SHEET 2 OF 2

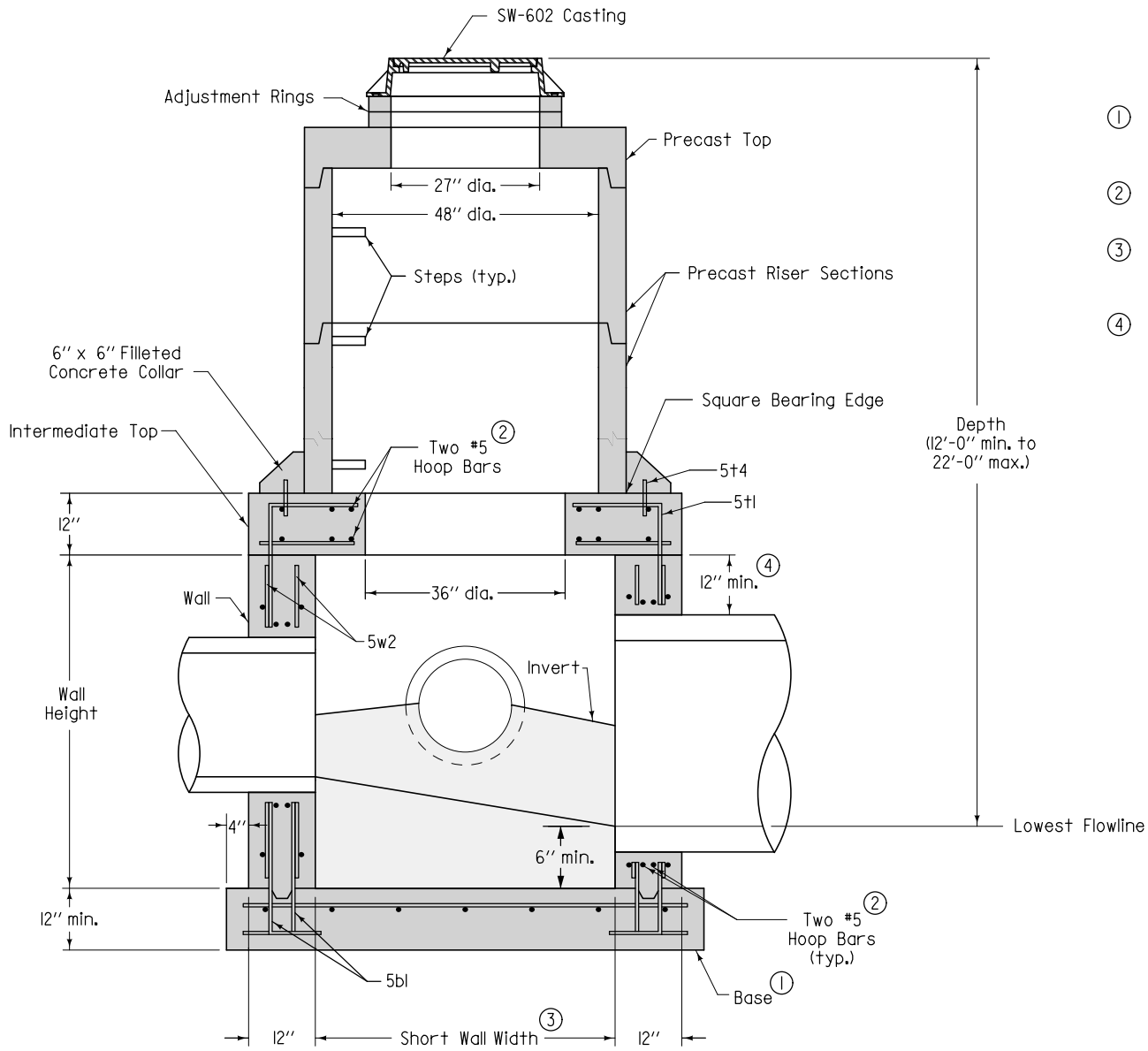

TYPICAL SECTION

Adjacent walls may have different widths based upon pipe configuration, but structure must be rectangular.

① Cast-in-place base shown. If base is precast integral with walls, the footprint of the base is not required to extend beyond the outer edge of the walls.

② Provide two #5 hoop bars at intermediate top opening and at all pipe openings.

③ Wall widths vary with pipe diameter and range from 4 feet minimum to 12 feet maximum. Provide 12 inches of wall width (minimum) each side of pipe opening.

④ 12 inch minimum wall height above all pipes.

		REVISION	
SUDAS	Iowa Department of Transportation	1	04-17-12
FIGURE 6010.404	STANDARD ROAD PLAN	SW-404	SHEET 1 of 2

REVISIONS: Modified note 3 on sheet 2.

Paul D. Wiegand — SUDAS DIRECTOR
Deanna Maifield — DESIGN METHODS ENGINEER

RECTANGULAR BASE/ CIRCULAR TOP STORM SEWER MANHOLE

FIGURE 6010.404 SHEET 1 OF 2

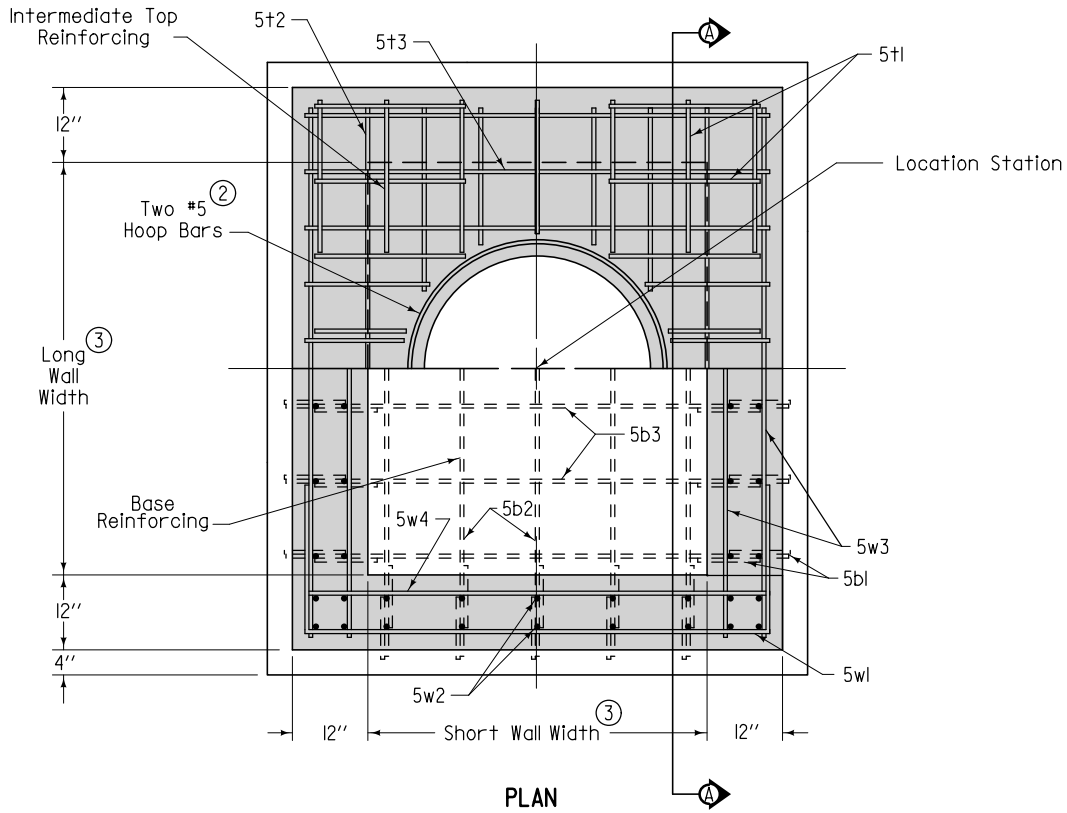

PLAN

(2) Provide two #5 hoop bars at intermediate top opening and at all pipe openings.

(3) Wall widths vary with pipe diameter and range from 4 feet minimum to 12 feet maximum. Provide 12 inches of wall width (minimum) each side of pipe opening.

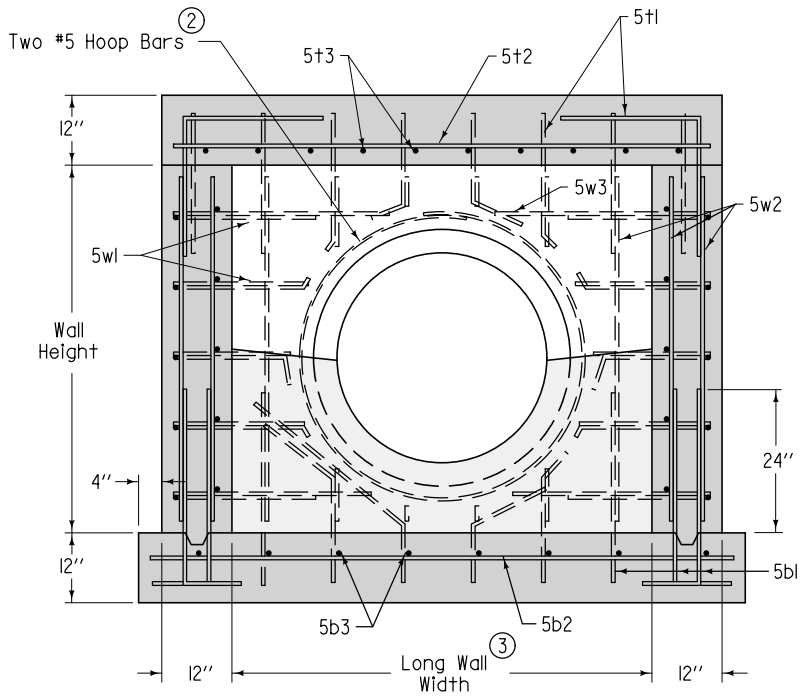

SECTION A-A

REINFORCING BAR LIST					
Mark	Size	Location	Shape	Length	Spacing
5t1	5	Top	L	48''	12''
5t2	5	Top	——	Long Wall plus 20''	9''
5t3	5	Top	——	Short Wall plus 20''	9''
5t4	5	Top	——	8''	12''
5b1	5	Base	L	43''	12''
5b2	5	Base	——	Long Wall plus 26''	12''
5b3	5	Base	——	Short Wall plus 26''	12''
5w1	5	Wall	⊓	Short Wall plus 68''	12''
5w2	5	Wall	——	Wall Height minus 4''	12''
5w3	5	Wall	——	Long Wall plus 20''	12''
5w4	5	Wall	——	Short Wall plus 20''	12''

BENT BARS

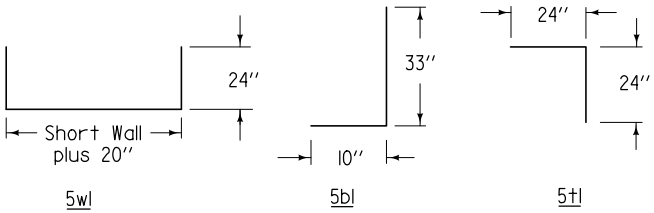

SUDAS	Iowa Department of Transportation	REVISION 1 04-17-12
FIGURE 6010.404	STANDARD ROAD PLAN	SW-404 SHEET 2 of 2

REVISIONS: Modified note 3 on sheet 2.

Paul D. Wiegand — SUDAS DIRECTOR; Deanna Maifeld — DESIGN METHODS ENGINEER

RECTANGULAR BASE/ CIRCULAR TOP STORM SEWER MANHOLE

FIGURE 6010.404 SHEET 2 OF 2

TYPE Q ①

Driveway Grate
(Minimum open area 370 in^2)

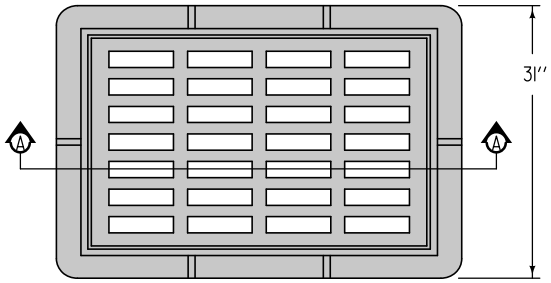

PLAN

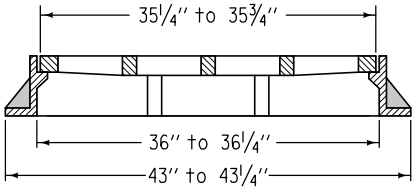

SECTION A-A

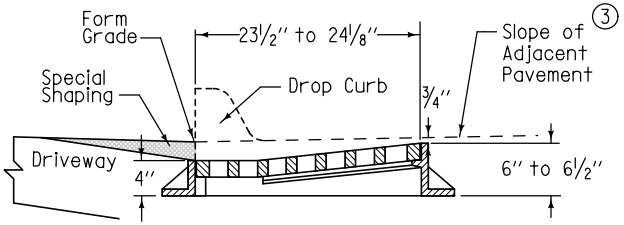

TYPICAL SECTION

TYPE R ②

Curb Inlet Grate
(Minimum open area 180 in^2)

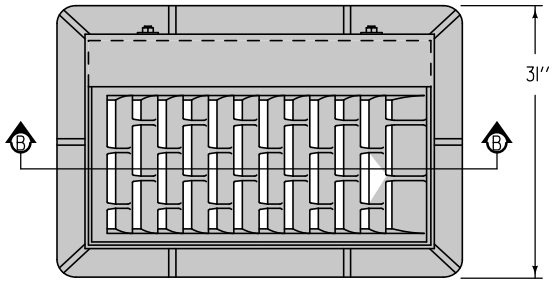

PLAN

Flow

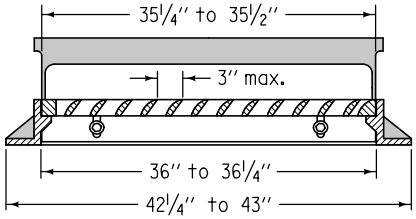

SECTION B-B

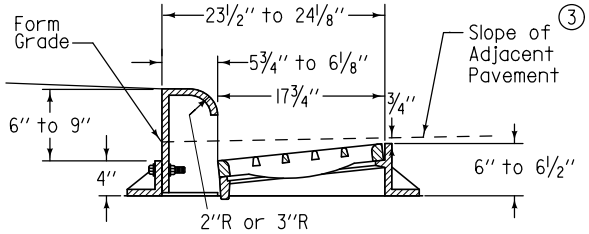

TYPICAL SECTION

① For use at curb drops for driveways. Use only when specified in the contract documents.

② Provide bicycle-safe vane-style grate. At low points, grates with vanes facing both directions of flow are allowed.

③ For details of boxout pavement, refer to SW-514.

SUDAS	Iowa Department of Transportation	REVISION 2 04-17-12
FIGURE 6010.603	STANDARD ROAD PLAN	SW-603 SHEET 1 of 2

REVISIONS: Modified dimensions on Type 'Q' and Type 'R' grates.

Paul D. Wiegand — SUDAS DIRECTOR
Deanna Maifeld — DESIGN METHODS ENGINEER

CASTINGS FOR GRATE INTAKES

FIGURE 6010.603 SHEET 1 OF 2

TYPE S ②④

Barrier Intake Grate
(Minimum open area 300 in^2)

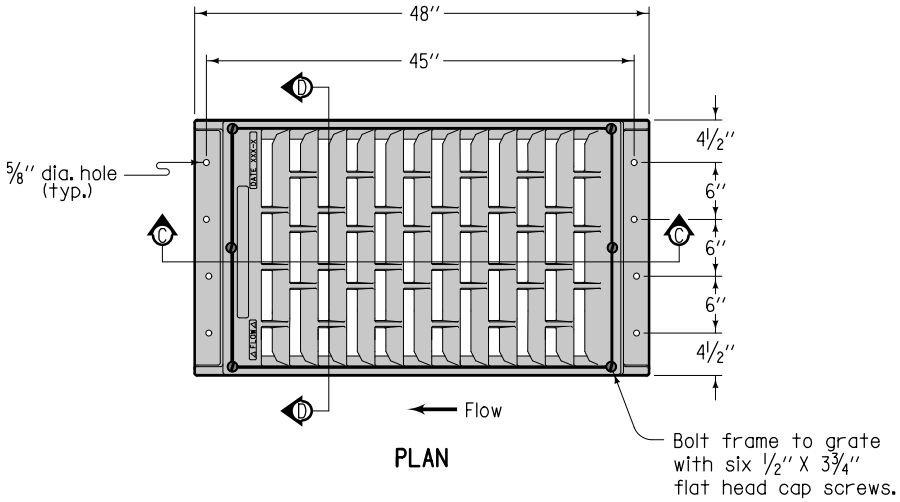

PLAN

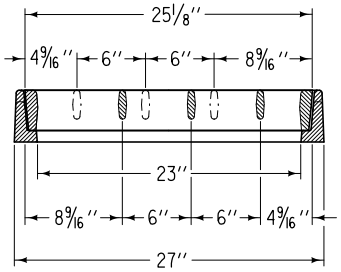

SECTION D-D

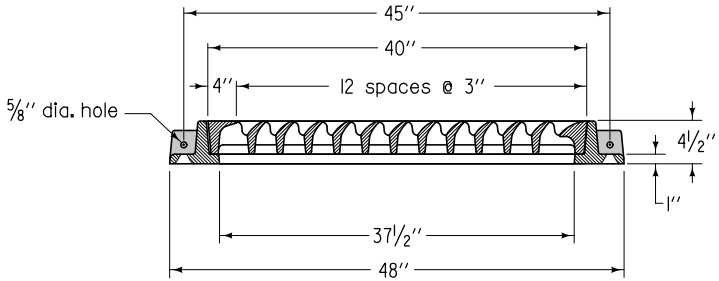

SECTION C-C

② Provide bicycle-safe vane-style grate. At low points, grates with vanes facing both directions of flow are allowed.

④ Use ductile iron frame castings meeting the requirements of ASTM A 536.

Frame minimum weight = 220 lbs.
Grate minimum weight = 340 lbs.

SUDAS	Iowa Department of Transportation	REVISION 2 04-17-12
FIGURE 6010.603	STANDARD ROAD PLAN	SW-603 SHEET 2 of 2

REVISIONS: Modified dimensions on Type 'Q' and Type 'R' grates.

Paul D. Wiegand — SUDAS DIRECTOR
Deanna Maifield — DESIGN METHODS ENGINEER

CASTINGS FOR GRATE INTAKES

FIGURE 6010.603 SHEET 2 OF 2

Traffic Control

NO.	DATE	TITLE
		Two-Lane and Multi-Lane Roadways
TC-1	10-18-11	Work Not Affecting Traffic (Two-Lane or Multi-Lane)
TC-30	04-17-12	Closure of Continuous Two-Way Left Turn Lane
TC-61	04-17-12	Two-Lane, Two-Way Operation
TC-62	04-17-12	Permanent Two-Lane to Four-Lane Divided Transition
TC-63	04-17-12	Lane Closure at Auxilliary Lane.
TC-64	04-17-12	Lane Closure at Two-Lane to Four-Lane Transition with Flagger
		Two-Lane Roadways
TC-202	04-17-12	Shoulder Closure (One Lane)
TC-203	04-17-12	Aerial Seeding Operations
TC-211	04-17-12	Lane Closure on Low Volume Roadway
TC-212	04-17-12	Spot Location Lane Closure with Flaggers
TC-213	04-17-12	Lane Closure with Flaggers
TC-214	04-17-12	Lane Closure with Flaggers for use with Pilot Car
TC-215	04-17-12	Lane Closure with Signals (Up to Three Days)
TC-216	04-17-12	Lane Closure with Signals
TC-217	10-19-10	Lane Closure with Signals and TBR
TC-218	04-17-12	Lane Closure with Pilot Car and Flagger Operated Signals
TC-228	04-17-12	Lane Closure Utilizing Continuous Two-Way Left Turn Lane
TC-231	10-16-07	Slow Moving Vehicle Operating in the Traffic Lane
TC-232	04-17-12	Shoulder Rumble Strip Operations
TC-233	10-18-11	Pavement Marking Operations Two-Lane
TC-251	04-17-12	Temporary Road Closure
TC-252	04-17-12	Routes Closed to Traffic
TC-253	04-17-12	Paved On-Site Detour
TC-271	04-19-11	Signalized Equipment Crossing
TC-272	04-17-12	Unsignalized Equipment Crossing

Traffic Control

NO.	DATE	TITLE
TC-273	04-20-10	Construction Site Entrance
TC-282	04-19-11	Uneven Lanes
TC-283	10-18-11	Surveying Operations
		Multi-Lane Roadways
TC-402	04-17-12	Shoulder Closure (Multi-Lane)
TC-403	04-17-12	Aerial Seeding Operations
TC-416	04-17-12	Partial Lane Closure on Ramps
TC-417	04-17-12	Ramp Closure
TC-418	04-17-12	Lane Closure on Divided Highway
TC-419	04-17-12	Lane Closure on Undivided Highway
TC-420	04-17-12	Lane Closure at Ramps
TC-421	04-17-12	Lane Closure with TBR
TC-422	04-17-12	Closure of Two Adjacent Lanes on Divided Highway
TC-423	04-17-12	Closure of Two Adjacent Lanes on Undivided Highway
TC-429	04-17-12	Closure of Continuous Two-Way Left Turn Lane and Adjacent Lane
TC-431	04-17-12	Slow Moving Vehicle Operating in the Traffic Lane
TC-432	04-17-12	Shoulder Rumble Strip Operations
TC-433	10-18-11	Pavement Marking Operations
TC-451	04-17-12	Temporary Road Closure on Divided Highway
TC-454	04-17-12	Temporary Detour Using Ramps on Divided Highway
TC-482	04-19-11	Uneven Lanes
TC-601	10-18-11	Pedestrian Detour
TC-602	10-18-11	Sidewalk Diversion

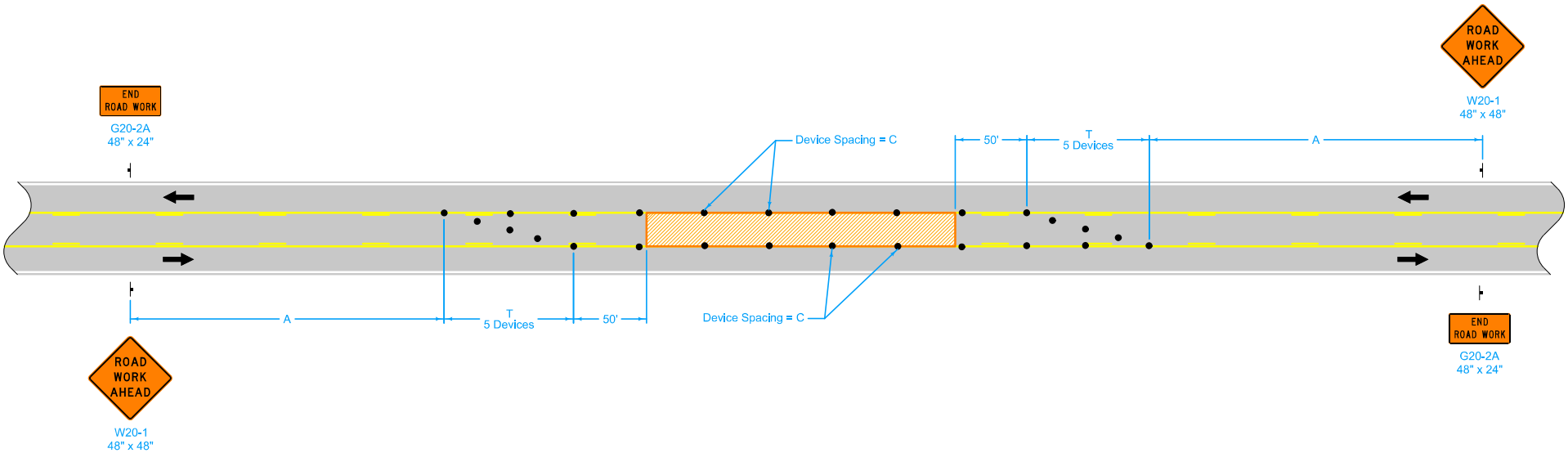

Possible Contract Item:
Traffic Control

LEGEND

- 42" Channelizer
- Traffic Sign
- Work Area
- Direction of Traffic

SPEED LIMIT (mph)	A	C	T
25 or less	100'	40'	50'
30 - 35	250'	40'	50'
40 - 50	700'	80'	100'
55 or greater	1000'	100'	100'

Iowa Department of Transportation

REVISION
4 | 04-17-12

STANDARD ROAD PLAN

TC-30

SHEET 1 of 1

REVISIONS: Removed "or vertical panel" from 42" Channelizer in Legend. Moved circle note 1 information to specifications.

Deanna Maifield
APPROVED BY DESIGN METHODS ENGINEER

CLOSURE OF CONTINUOUS TWO-WAY LEFT-TURN LANE

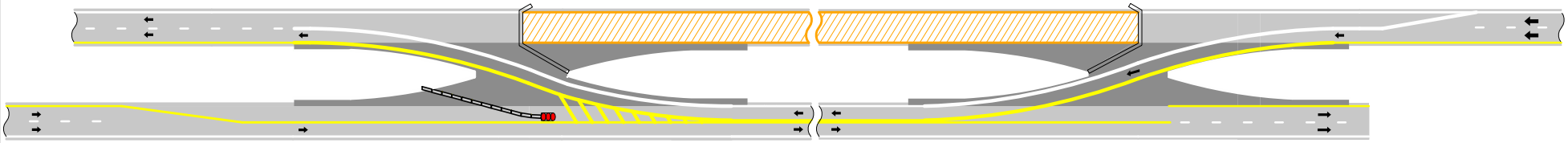

Place Two-Way Traffic symbol and DO NOT PASS signs alternately on both sides of the roadway at a maximum of one-half mile intervals for both directions of travel. Always have signs in sight of motorists.

When the Average Daily Traffic (ADT) exceeds 20,000 vehicles per day or when a traffic queue extends beyond the advanced signing, place RIGHT/LEFT LANE CLOSED 4 MILES and RIGHT/LEFT LANE CLOSED 2 MILES signs (W20-5) on both sides of the roadway 4 miles and 2 miles in advance of the lane closure, respectively, as appropriate.

Possible Contract Items:

- Painted Symbols and Legends
- Pavement Marking Items
- Pavement Marking Removed
- Safety Closures
- Temporary Barrier Rail
- Temporary Crash Cushions
- Temporary Floodlighting
- Temporary Lane Separator System
- Traffic Control

Possible Tabulations:

108-13A, 108-22, 108-27, 108-29, 108-30, 108-33, 108-35

Iowa Department of Transportation

STANDARD ROAD PLAN

REVISION	
6	04-17-12

TC-61

SHEET 1 of 5

REVISIONS: Removed "or Vertical Panel" from 42" Channelizer in Legend and added Sheet 1.

Deanna Maifield

APPROVED BY DESIGN METHODS ENGINEER

TWO-LANE, TWO-WAY OPERATION

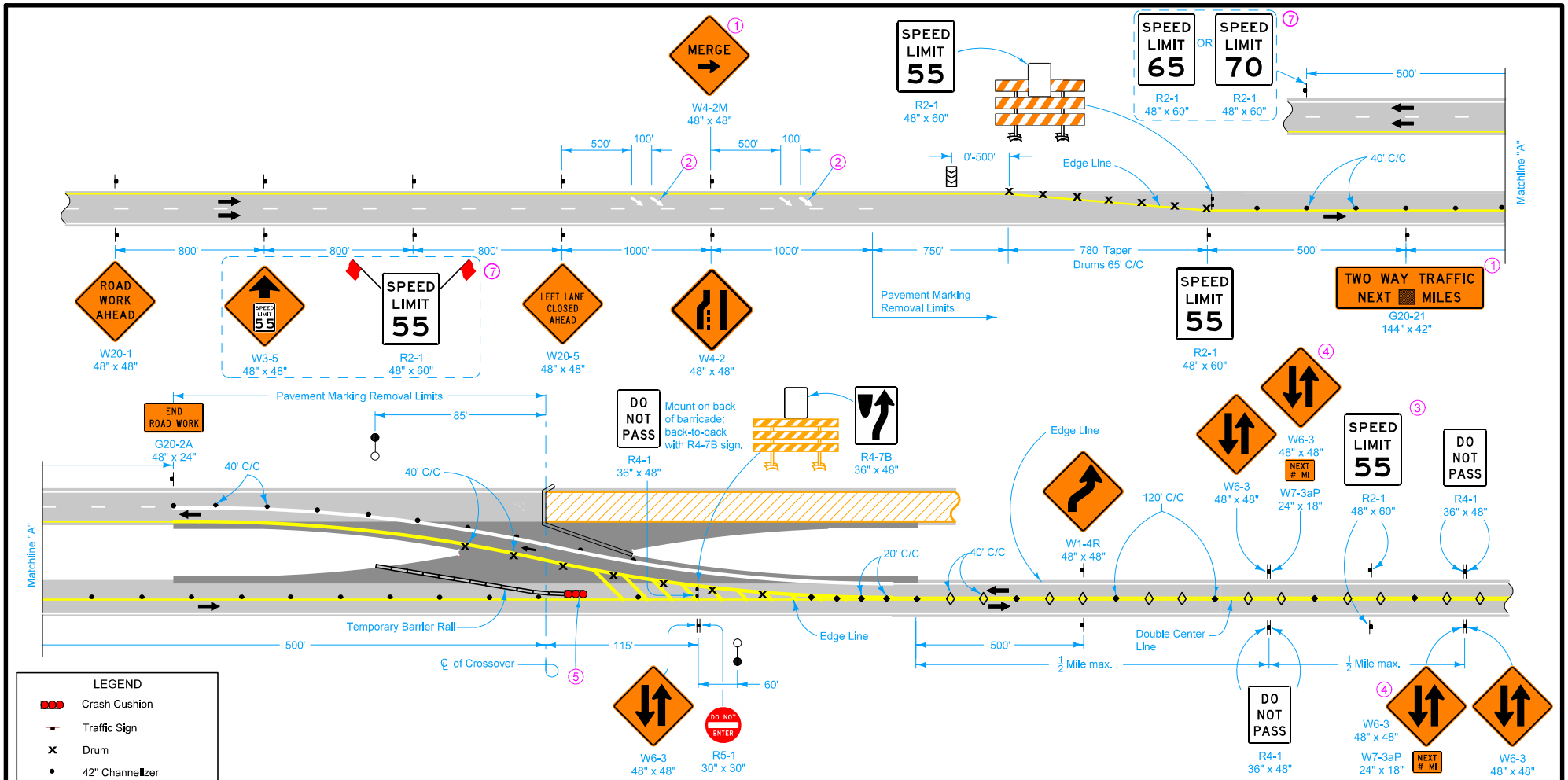

LEGEND

- Crash Cushion
- Traffic Sign
- Drum
- 42" Channelizer
- Channelizer Marker
- Tubular Marker
- Type III Barricade
- Sequencing Arrow
- Safety Closure (Refer to TC-252)
- Temporary Floodlighting
- Work Area
- Direction of Traffic
- Detour Pavement

1. Refer to SI-881 for sign details.
2. Refer to PM-111 for arrow details.
3. Space Speed Limit signs at one-mile intervals.
4. Install an additional supplemental plaque with the message NEXT X MILES on the Two-Way Traffic symbol sign assembly on the right side of the roadway to inform motorists of the remaining length of two-lane traffic. Round X to the nearest whole-mile increment.
5. Temporary Crash Cushion. Refer to BA-500 for approved sand barrel layouts.
7. For roadways with a posted speed limit of 60 mph or greater before road work:

   Place SPEED LIMIT AHEAD sign and SPEED LIMIT 55 sign prior to the lane closure as shown. Place SPEED LIMIT 65 or 70 beyond the work area as shown.

   Remove or cover all existing signs that conflict with 55 mph speed limit while 55 mph speed limit is in effect.

Iowa Department of Transportation

STANDARD ROAD PLAN

REVISION	
6	04-17-12

TC-61

SHEET 2 of 5

REVISIONS: Removed "or Vertical Panel" from 42" Channelizer in Legend and added Sheet 1.

Deanna Maifield
APPROVED BY DESIGN METHODS ENGINEER

TWO-LANE, TWO-WAY OPERATION

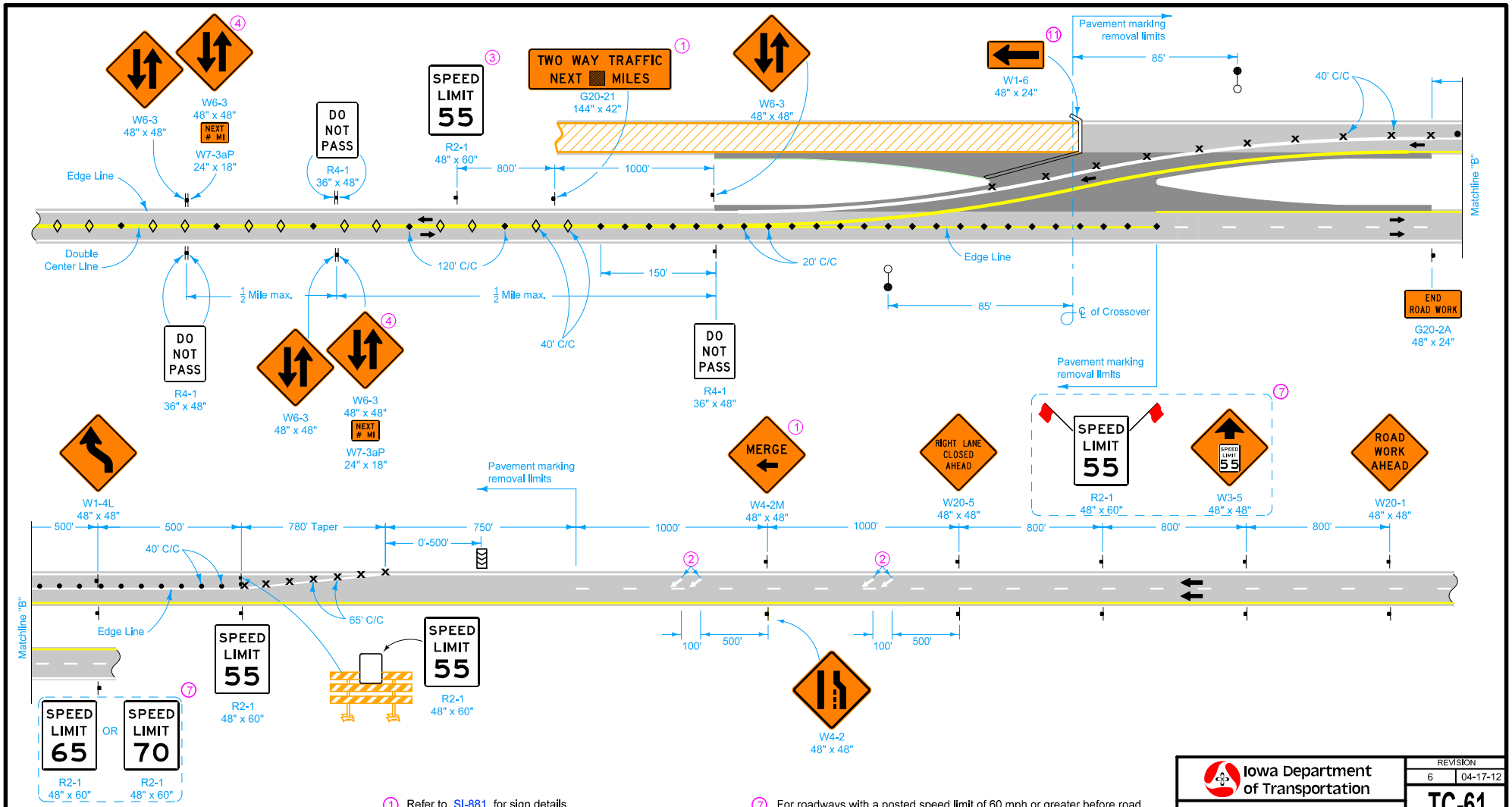

LEGEND

Traffic Sign	Sequencing Arrow
Drum	Safety Closure (Refer to TC-252)
42" Channelizer	Temporary Floodlighting
Channelizer Marker	Work Area
Tubular Marker	Direction of Traffic
Type III Barricade	Detour Pavement

1. Refer to SI-881 for sign details.
2. Refer to PM-111 for arrow details.
3. Space Speed Limit signs at one-mile intervals.
4. Install an additional supplemental plaque with the message NEXT X MILES on the Two-Way Traffic symbol sign assembly on the right side of the roadway to inform motorists of the remaining length of two-lane traffic. Round X to the nearest whole-mile increment.

7. For roadways with a posted speed limit of 60 mph or greater before road work:

   Place SPEED LIMIT AHEAD sign and SPEED LIMIT 55 sign prior to the lane closure as shown. Place SPEED LIMIT 65 or 70 beyond the work area as shown.

   Remove or cover all existing signs that conflict with 55 mph speed limit while 55 mph speed limit is in effect.

11. Add below R11-2 already included in Safety Closure.

Iowa Department of Transportation

STANDARD ROAD PLAN

REVISION	
6	04-17-12

TC-61

SHEET 3 of 5

REVISIONS: Removed "or Vertical Panel" from 42" Channelizer in Legend and added Sheet 1.

Deanna Maifield
APPROVED BY DESIGN METHODS ENGINEER

TWO-LANE, TWO-WAY OPERATION

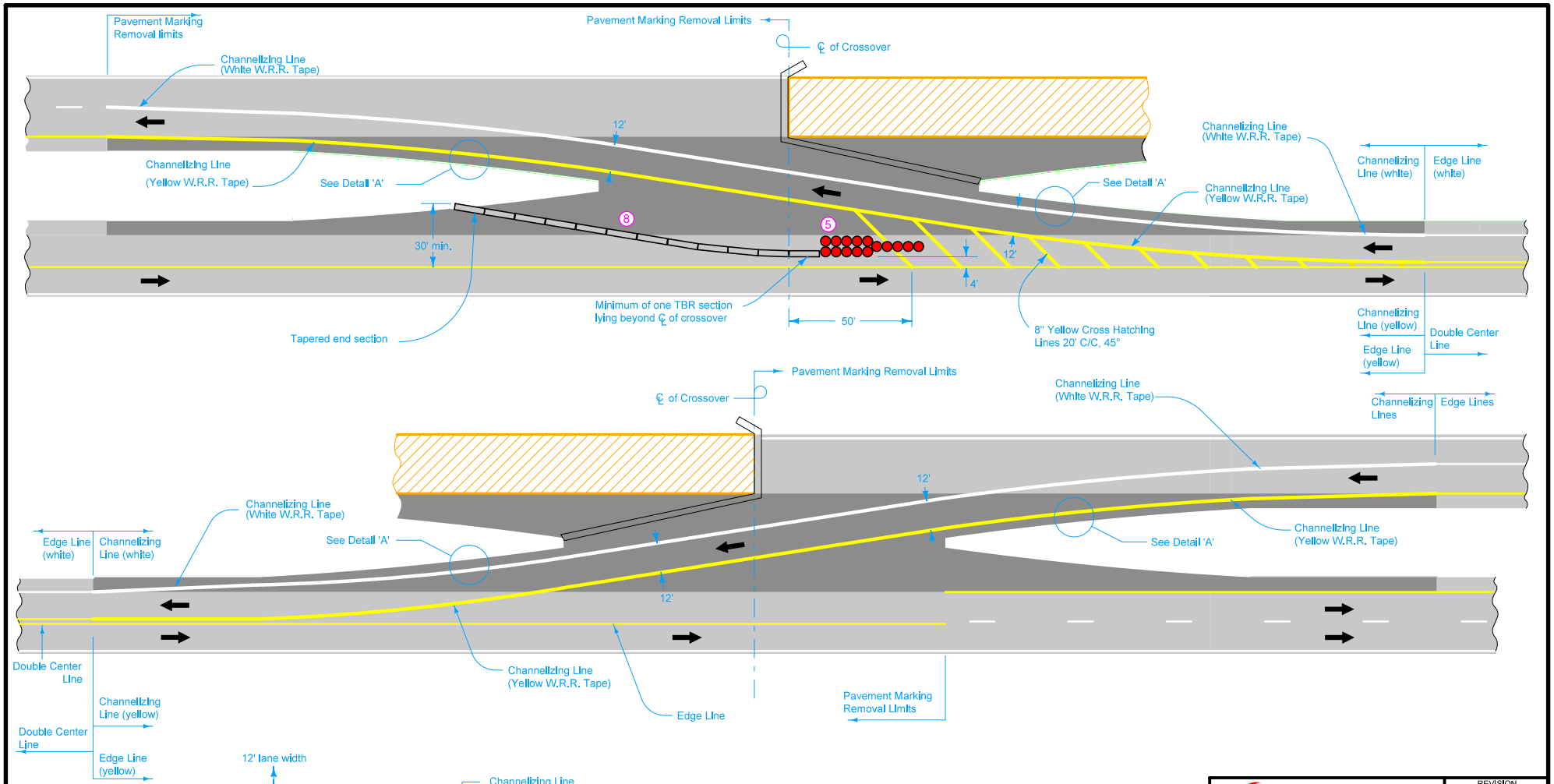

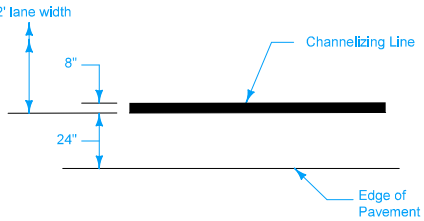

DETAIL 'A'

LEGEND

- Crash Cushion
- Work Area
- Direction of Traffic
- Detour Pavement
- Safety Closure (Refer to TC-252)

SUPPLEMENTAL CROSSOVER DRAWINGS (9)

(5) Temporary Crash Cushion. Refer to BA-500 for approved sand barrel layouts.

(8) Number of TBR sections varies based on dimensions of Detour Pavement. Refer to BA-401 and 108-33 for TBR information.

(9) Details shown hereon are intended to provide additional information to the requirements shown on sheets 1 and 2.

Iowa Department of Transportation

STANDARD ROAD PLAN

REVISION	
6	04-17-12

TC-61

SHEET 4 of 5

REVISIONS: Removed "or Vertical Panel" from 42" Channelizer in Legend and added Sheet 1.

Deanna Maifield

APPROVED BY DESIGN METHODS ENGINEER

TWO-LANE, TWO-WAY OPERATION

RAMP LOCATIONS

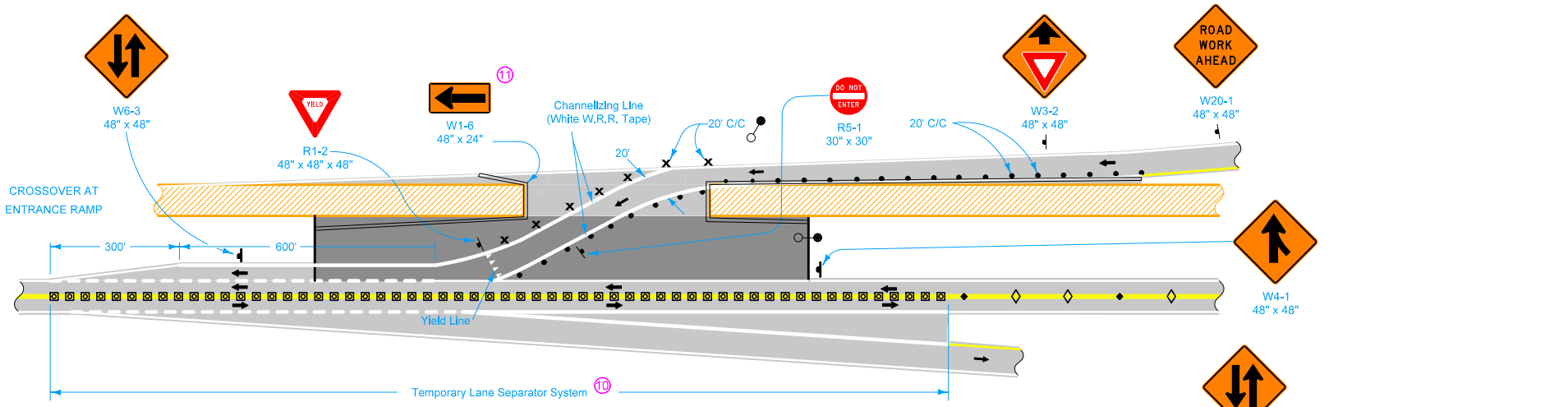

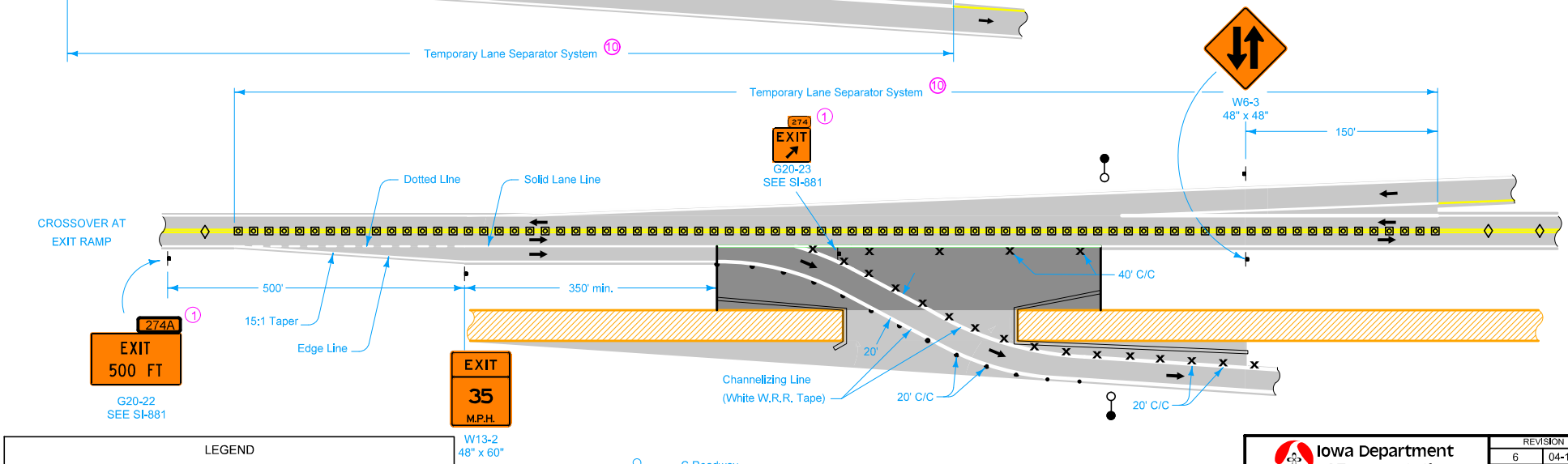

LEGEND

- Traffic Sign
- Drum
- 42" Channelizer
- Channelizer Marker
- Tubular Marker
- Type III Barricade
- Temporary Lane Separator
- Type 'A' Warning Light
- Temporary Floodlighting
- Work Area
- Detour Pavement
- Direction of Traffic
- Safety Closure (Refer to TC-252)

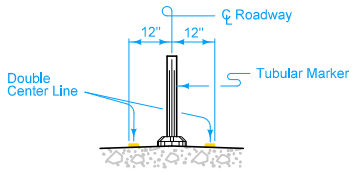

PLACEMENT OF
DOUBLE YELLOW CENTERLINE

1. Refer to SI-881 for sign details.
10. Place TLSS from start of ramp gore or start of full width decel lane to end of temporary ramp crossover pavement or end of ramp gore.
11. Add below R11-2 already included in Safety Closure.

Iowa Department of Transportation

STANDARD ROAD PLAN

REVISION	
6	04-17-12

TC-61

SHEET 5 of 5

REVISIONS: Removed "or Vertical Panel" from 42" Channelizer in Legend and added Sheet 1.

Deanna Maifield
APPROVED BY DESIGN METHODS ENGINEER

TWO-LANE, TWO-WAY OPERATION

CROSS TO THE RIGHT

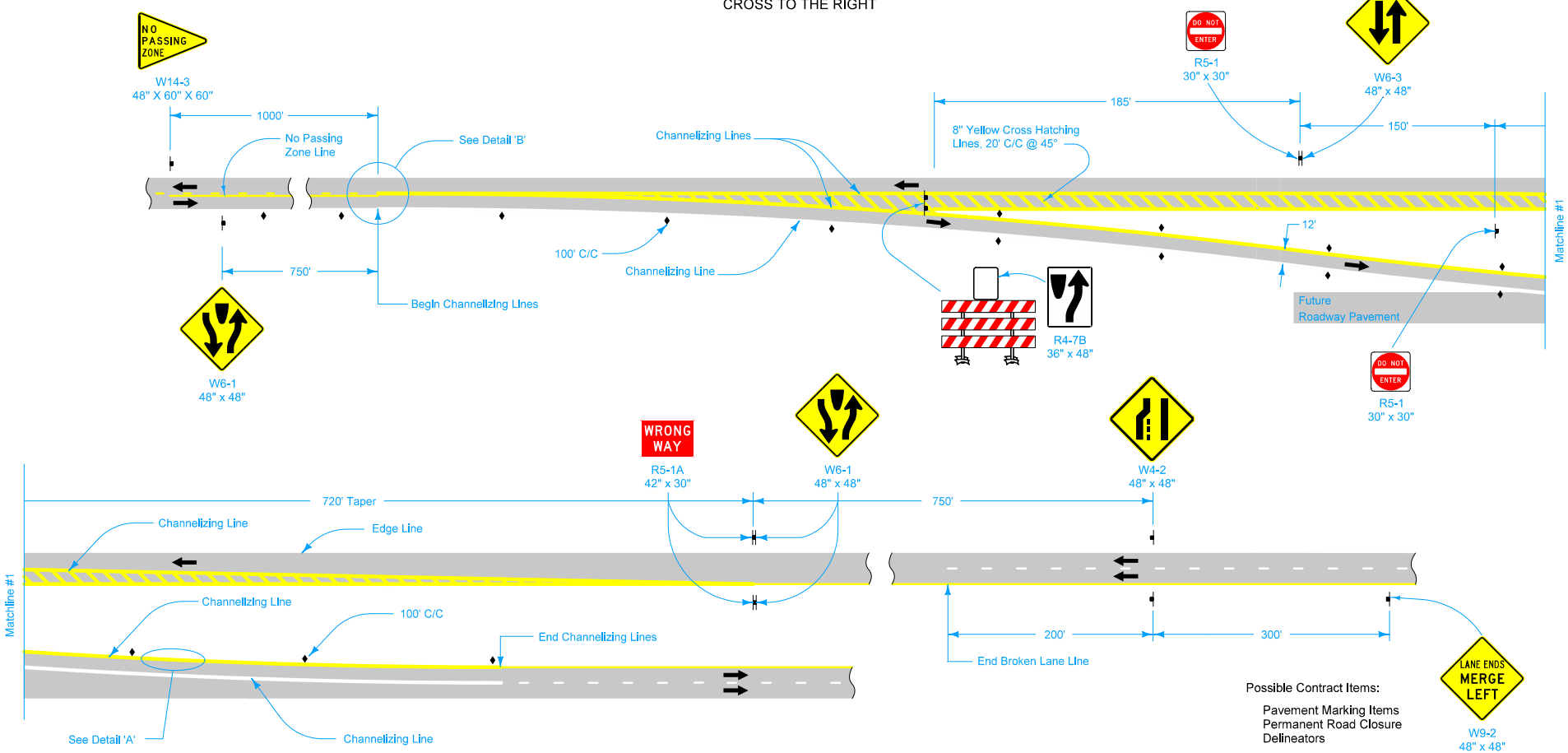

Possible Contract Items:

Pavement Marking Items
Permanent Road Closure
Delineators

Possible Tabulations: 102-4, 108-22

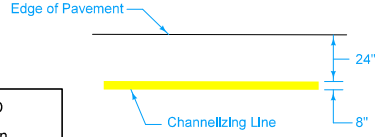

DETAIL 'A'
TYPICAL CHANNELIZING LINE PLACEMENT

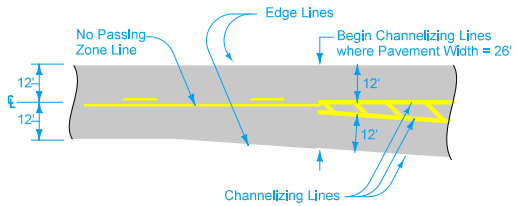

DETAIL 'B'
BEGINNING OF PAINTED MEDIAN

LEGEND

- Traffic Sign
- Type III Barricade
- Delineator
- Direction of Traffic

Warning signs shall be yellow with black legend and symbols.

Type III barricades shall conform to Section 3F.01 of the MUTCD.

Iowa Department of Transportation

STANDARD ROAD PLAN

REVISION	
4	04-17-12

TC-62

SHEET 1 of 2

REVISIONS: Changed title to add the word 'Divided'.

Deanna Maifield
APPROVED BY DESIGN METHODS ENGINEER

PERMANENT TWO-LANE TO FOUR-LANE DIVIDED TRANSITION

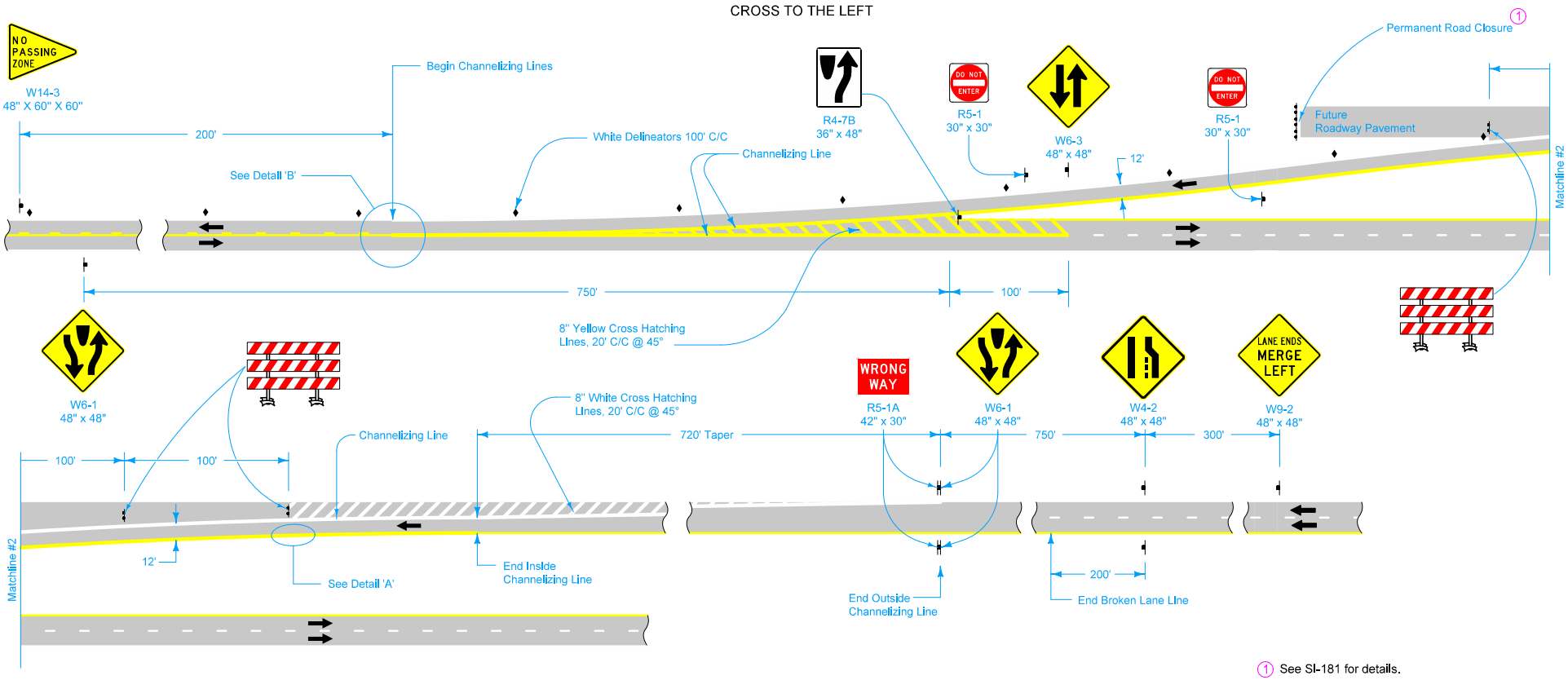

1 See SI-181 for details.

LEGEND

- Traffic Sign
- Type III Barricade
- Delineator
- Direction of Traffic

Iowa Department of Transportation

STANDARD ROAD PLAN

REVISION	
4	04-17-12

TC-62

SHEET 2 of 2

REVISIONS: Changed title to add the word 'Divided'.

Deanna Maifield
APPROVED BY DESIGN METHODS ENGINEER

PERMANENT TWO-LANE TO FOUR-LANE DIVIDED TRANSITION

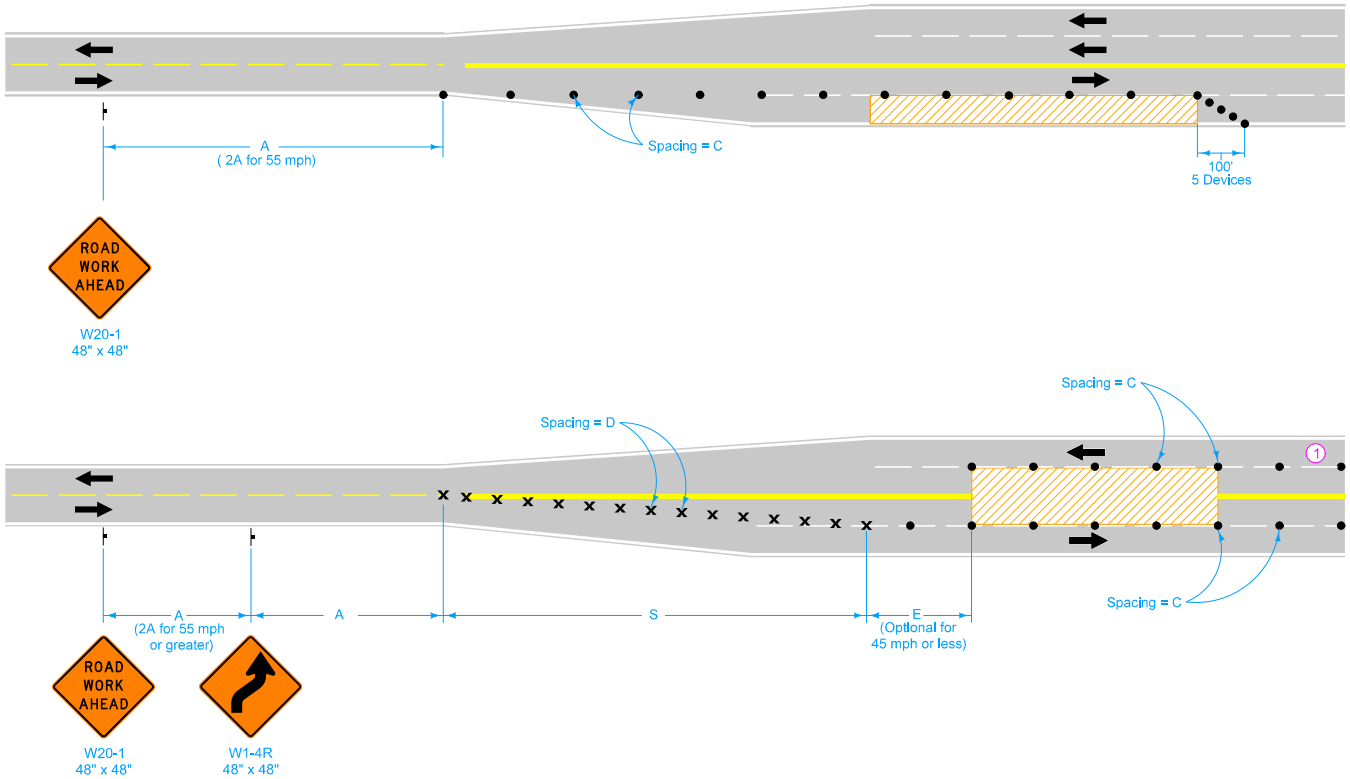

Possible Contract Item:
Traffic Control

LEGEND

- Traffic Sign
- 42" Channelizer
- Drum
- Work Area
- Direction of Traffic

SPEED LIMIT	A	C	D	E	S
25 or less	100'	40'	25'	0' - 200'	100'
30 - 35	250'	40'	30'	0' - 200'	120'
40 - 45	350'	80'	40'	0' - 400'	280'
50 - 55	500'	100'	50'	200' - 400'	350'

(1) Refer to TC-419 for lane closure details.

Iowa Department of Transportation

STANDARD ROAD PLAN

REVISION
New 04-17-12

TC-63

SHEET 1 of 1

REVISIONS: New.

Deanna Maifield
APPROVED BY DESIGN METHODS ENGINEER

LANE CLOSURE AT AUXILLIARY LANE

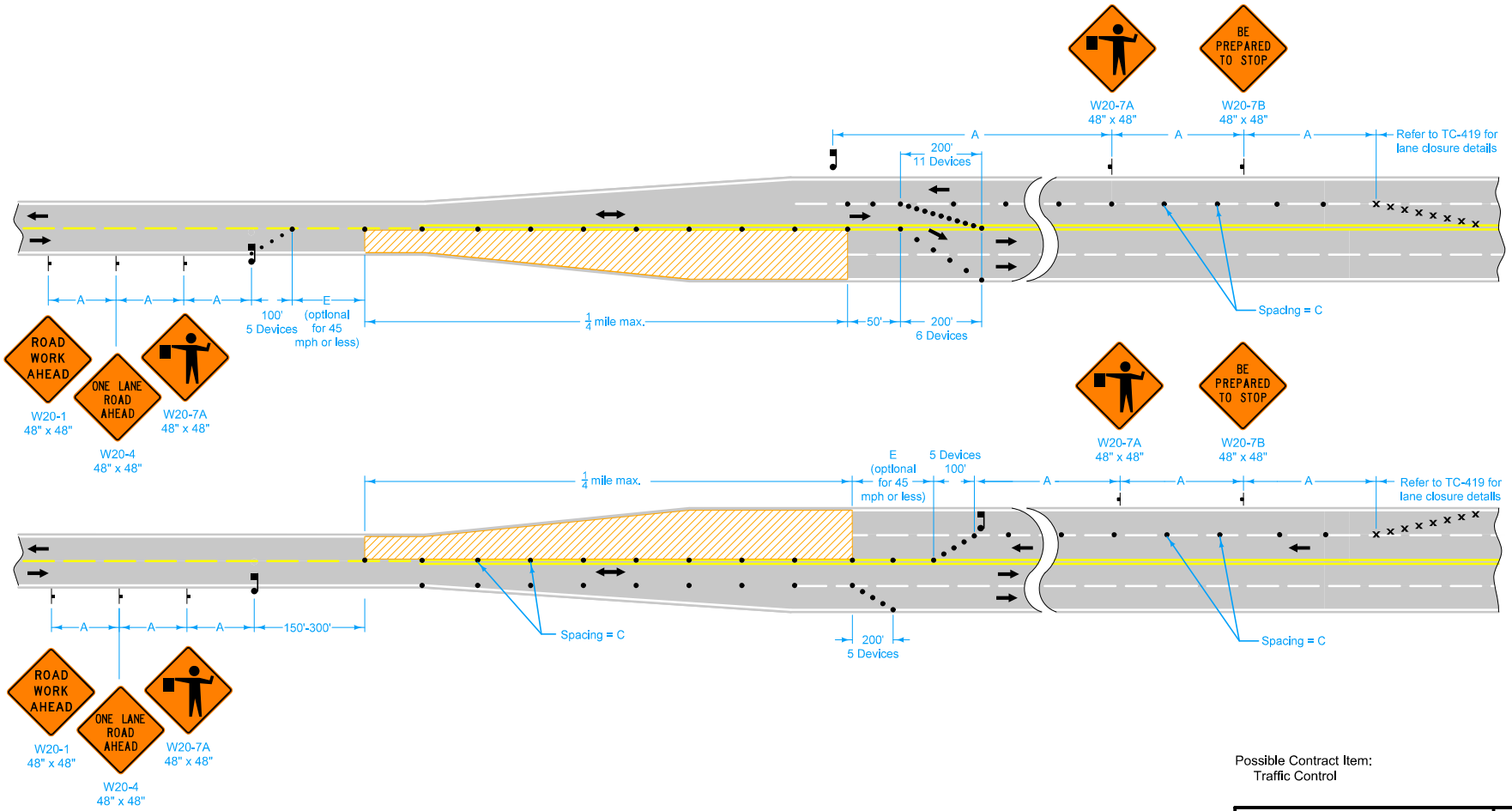

Possible Contract Item:
Traffic Control

LEGEND

- Traffic Sign
- 42' Channelizer
- Drum
- Work Area
- Direction of Traffic

SPEED LIMIT	A	C	E
25 or less	100'	40'	0' - 200'
30 - 35	250'	40'	0' - 200'
40 - 45	350'	80'	0' - 200'
50 - 55	500'	100'	200' - 300'

Iowa Department of Transportation

STANDARD ROAD PLAN

REVISION	
New	04-17-12

TC-64

SHEET 1 of 1

REVISIONS: New

Deanna Maifield
APPROVED BY DESIGN METHODS ENGINEER

LANE CLOSURE AT TWO-LANE TO FOUR-LANE TRANSITION WITH FLAGGER

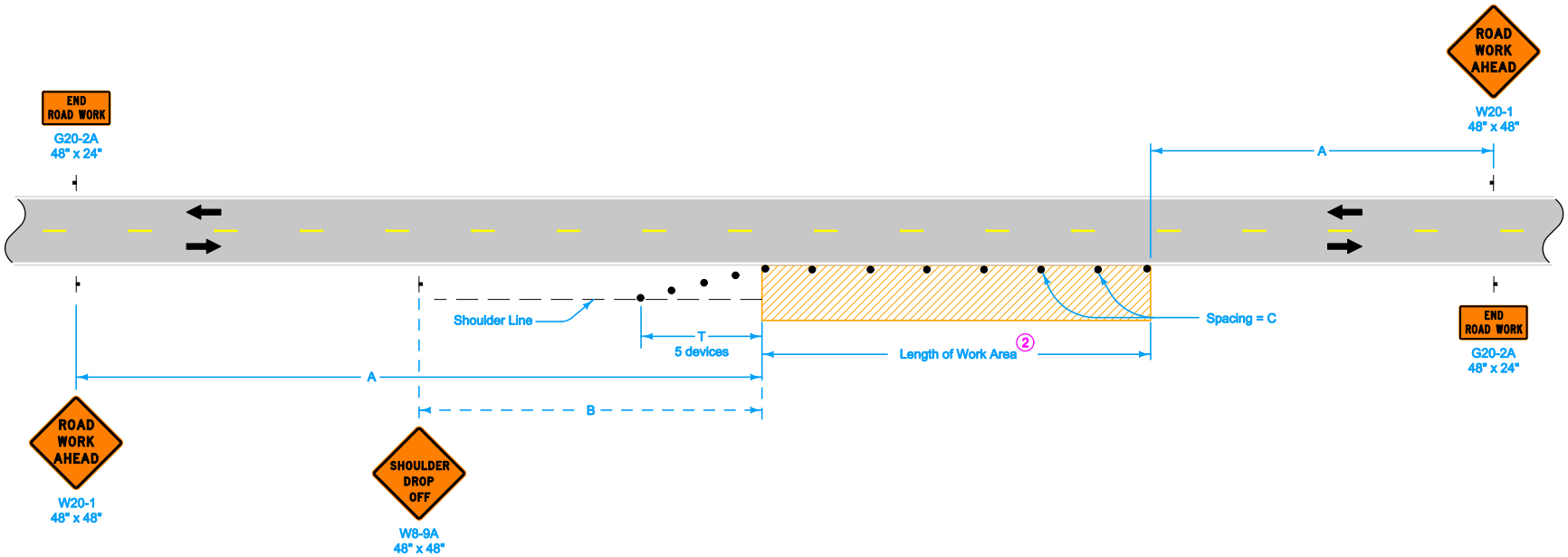

When a pavement edge drop-off exists, install a SHOULDER DROP-OFF sign.

Pavement edge drop-offs greater than a nominal 10 inches will not be allowed during non-working hours.

Shoulder edge drop-offs shall be mitigated according to Article 1107.08.K2 of the Standard Specifications.

① When the length of a pavement edge drop-off is 1000 feet or less, the temporary fillet requirement of Article 1107.08 of the Standard Specifications does not apply.

Space devices at 40 feet.

② For work areas less than 200 feet long, use channelizers spaced at 20 foot centers or use a vehicle with an amber revolving light or amber strobe light.

Possible Contract Item:
Traffic Control

LEGEND

- Traffic Sign
- 42" Channelizer
- Work Area
- Direction of Traffic

SPEED LIMIT (mph)	A	B	C ②	T
35 or less	500'	250'	40'	100'
40 - 45	700'	350'	80' ①	200'
50 or greater	1000'	500'	100' ①	200'

Iowa Department of Transportation

STANDARD ROAD PLAN

REVISION	
4	04-17-12

TC-202

SHEET 1 of 1

REVISIONS: Removed "or Vertical Panel" from 42" Channelizer in Legend.

Deanna Maifield
APPROVED BY DESIGN METHODS ENGINEER

SHOULDER CLOSURE (ONE LANE)

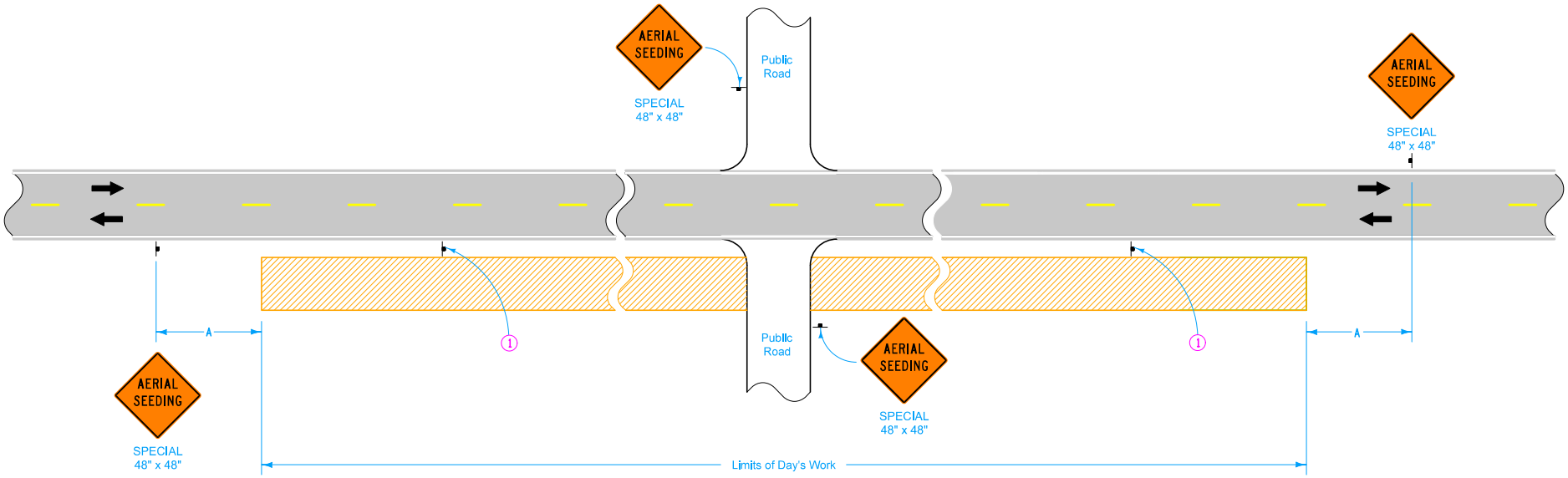

Possible Contract Item:

Traffic Control

1 AERIAL SEEDING signs shall be placed along the mainline at a maximum spacing of 3 miles.

LEGEND

- Traffic Sign
- Work Area
- Direction of Traffic

SPEED LIMIT (mph)	A
35 or less	250'
40 - 45	350'
50 or greater	500'

Iowa Department of Transportation

STANDARD ROAD PLAN

REVISION	
2	04-17-12

TC-203

SHEET 1 of 1

REVISIONS: No significant changes. Changed to color.

Deanna Maifield

APPROVED BY DESIGN METHODS ENGINEER

AERIAL SEEDING OPERATIONS

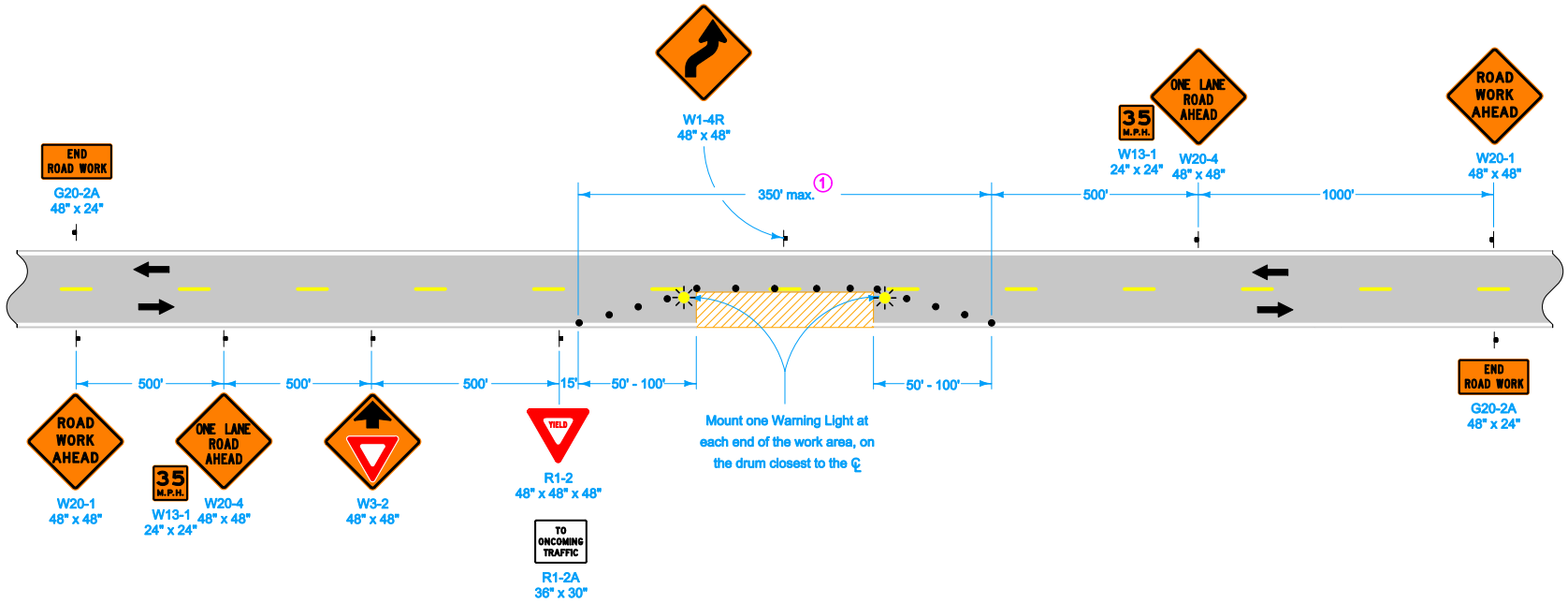

LEGEND

- Type 'A' Warning Light
- Traffic Sign
- Work Area
- Direction of Traffic
- 42" Channelizer

Do not use this layout when ADT exceeds 2000 vehicles.

Locate this layout at least 2,500 feet from any other work site layout.

Full-depth openings during non-working hours will not be allowed. Temporary plating, planking or filling may be necessary. Vehicles, unattended equipment, materials or stock-piled waste are not permitted between the shoulder lines during non-working hours.

For bridge deck overlay projects: The night before overlay operations begin, a bridge deck finishing machine and necessary materials may be placed on the roadway.

1 Do not use this layout if a No Passing Zone for the closed lane is located within this area.

Possible Contract Item:

Traffic Control

Iowa Department of Transportation

STANDARD ROAD PLAN

REVISION	
2	04-17-12

TC-211

SHEET 1 of 1

REVISIONS: Removed "or Vertical Panel" from 42" Channelizer in Legend. Removed Drum information already in the specifications.

Deanna Maifield

APPROVED BY DESIGN METHODS ENGINEER

LANE CLOSURE ON LOW VOLUME ROADWAY

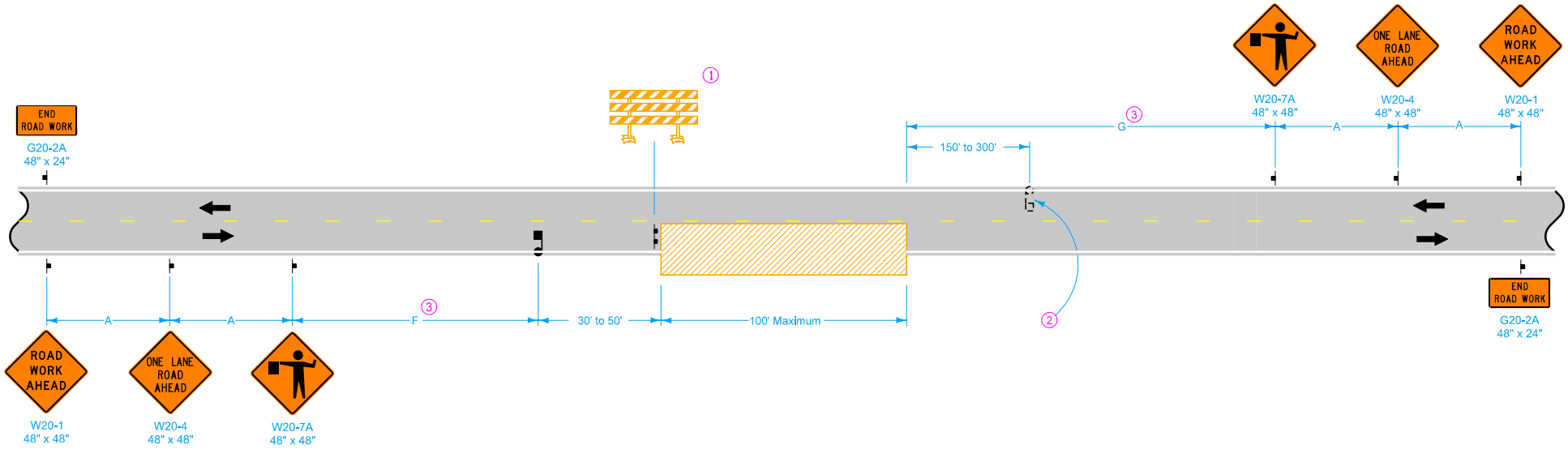

Possible Contract Items:

Traffic Control
Flaggers

LEGEND

- Traffic Sign
- Flagger
- Work Area
- Type III Barricade
- Direction of Traffic

SPEED LIMIT (mph)	A	F and G Range (3)	F + G Max.
35 or less	250'	250'-3250'	3500'
40 - 45	350'	350'-3350'	3700'
50 or greater	500'	500'-3500'	4000'

(1) A vehicle with an amber revolving or an amber strobe light may be substituted for the Type III barricade.

(2) A second flagger shall be required:

If the flagger's view of approaching traffic in the open lane is less than 1/4 mile or the work site is in an area of restricted sight distance (such as a "No Passing" zone); or

If excessive traffic delays are encountered.

(3) F and G distances are to remain as near minimum values as work permits. However, to be able to move the work area without moving the advance signing, F and G distances may be varied within the limits of the table. Maximum movement can be achieved by setting one F or G value at the minimum and the other value at its maximum.

Iowa Department of Transportation

STANDARD ROAD PLAN

REVISION 2 04-17-12

TC-212

SHEET 1 of 1

REVISIONS: No significant changes. Changed to color.

Deanna Maifield
APPROVED BY DESIGN METHODS ENGINEER

SPOT LOCATION LANE CLOSURE WITH FLAGGERS

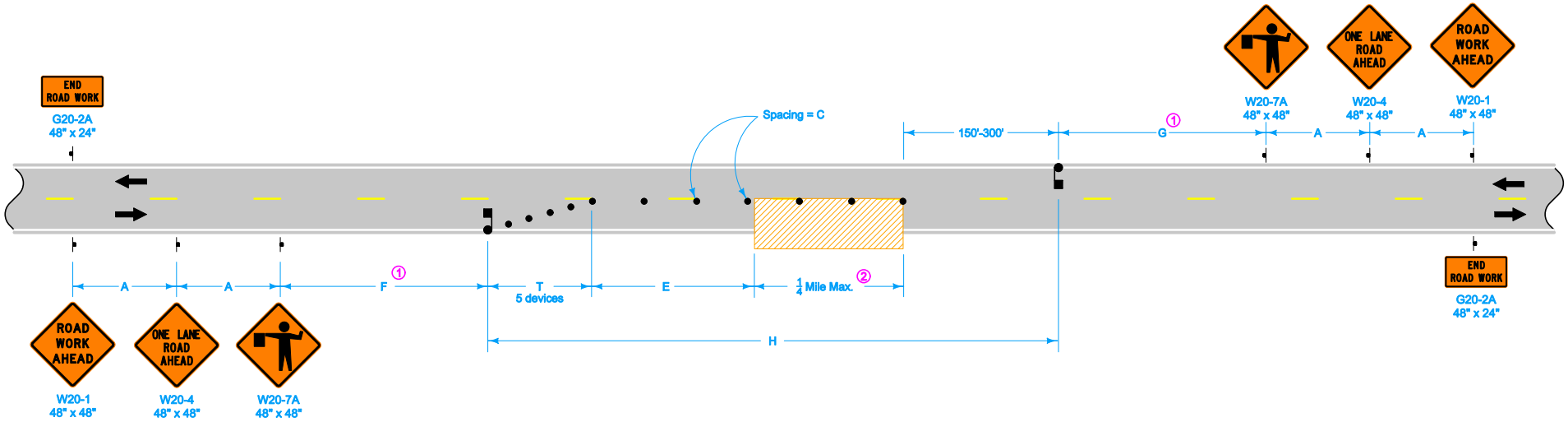

Possible Contract Items:
Flaggers
Traffic Control

LEGEND

- Traffic Sign
- Flagger
- 42" Channelizer
- Work Area
- Direction of Traffic

SPEED LIMIT (mph)	A	C	E	F and G Range ①	F + G Max.	H Max.	T
35 or less	250'	40'	0'-200'	500'-3000'	3500'	2000'	50'
40 - 45	350'	80'	0'-200'	700'-3000'	3700'	2000'	100'
50 or greater	500'	100'	200'-300'	1000'-3000'	4000'	2000'	100'

① Keep F and G distances as near to minimum values as work permits. However, to allow advancement of the work area without moving signs, F and G distances may be varied within the limits of the table. Maximum movement can be achieved by setting one F or G value at the minimum and the other value at its maximum.

② If length of work area exceeds 1/4 mile, use TC-214.

Iowa Department of Transportation

STANDARD ROAD PLAN

REVISION	
3	04-17-12

TC-213

SHEET 1 of 1

REVISIONS: Removed "or Vertical Panel" from 42" Channelizer in Legend.

Deanna Maifield
APPROVED BY DESIGN METHODS ENGINEER

LANE CLOSURE WITH FLAGGERS

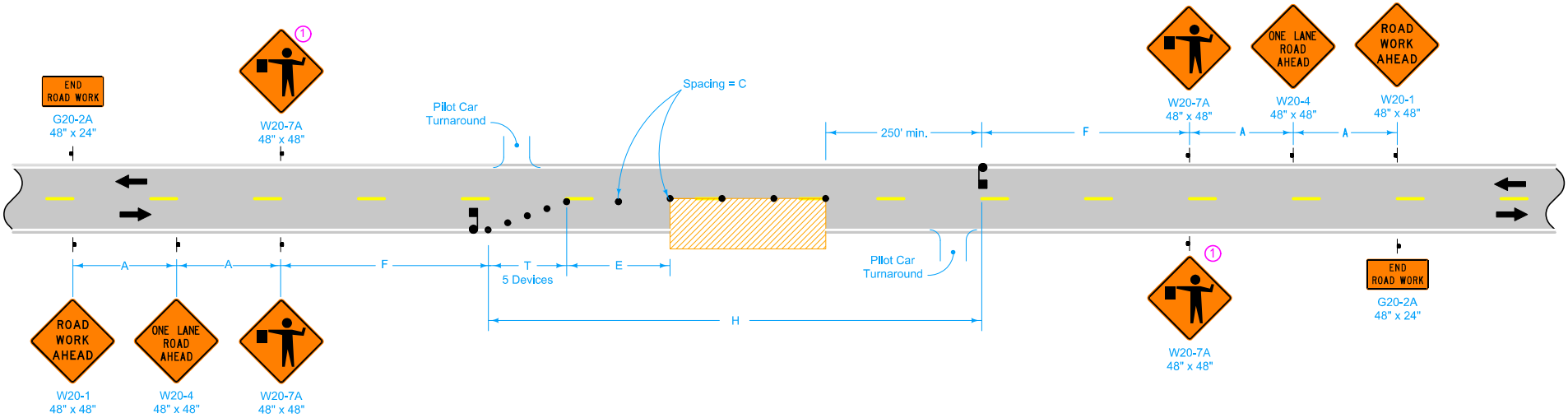

LEGEND

- Traffic Sign
- Flagger
- 42" Channelizer
- Work Area
- Direction of Traffic

SPEED LIMIT (mph)	ADT	A	C	E	F	H (2) max.	T
35 or less	up to 2,500	250'	40'	0'-200'	500'	2.5 mi.	50'
	2,500 - 5,000	250'	40'	0'-200'	500'	2.0 mi.	50'
	more than 5,000	500'	40'	0'-200'	1000'	1.5 mi.	50'
40 - 45	up to 2,500	350'	80'	0'-200'	700'	2.5 mi.	100'
	2,500 - 5,000	350'	80'	0'-200'	700'	2.0 mi.	100'
	more than 5,000	700'	80'	0'-200'	1400'	1.5 mi.	100'
50 or greater	up to 2,500	500'	100'	200'-300'	1000'	2.5 mi.	100'
	2,500 - 5,000	500'	100'	200'-300'	1000'	2.0 mi.	100'
	more than 5,000	1000'	100'	200'-300'	2000'	1.5 mi.	100'

(1) Sign optional for ADT less than 5,000.

(2) In rural areas during non-peak hours, the lane closure may be extended up to 1.0 mile beyond the maximum shown in the table. Once the traffic control devices have been placed to extend the lane closure, progress downstream until the H distance is once again within the limit shown in the table.

Possible Contract Items:
- Flagger
- Pilot Car
- Traffic Control

Iowa Department of Transportation

STANDARD ROAD PLAN

REVISION 4 04-17-12

TC-214

SHEET 1 of 1

REVISIONS: Removed "or Vertical Panel" from 42" Channelizer in Legend.

Deanna Maifield
APPROVED BY DESIGN METHODS ENGINEER

LANE CLOSURE WITH FLAGGERS FOR USE WITH PILOT CAR

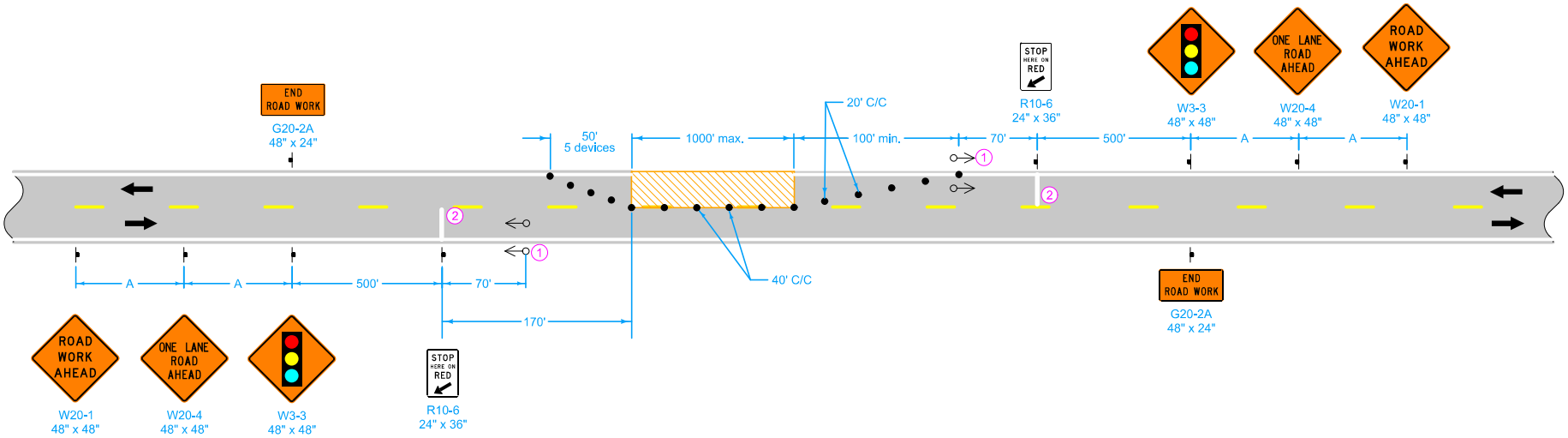

SPEED LIMIT (mph)	A
35 or less	250'
40-45	350'
50 or greater	500'

This layout is for conditions lasting up to three calendar days. For situations lasting longer than three days refer to TC-216.

Temporary Traffic Signals will meet the requirements of 2528.07 except for the following:

1. In lieu of a trailor or span-wire mounted system, signal heads may be located on the shoulders, one on each side of the roadway. Mount shoulder signal heads a minimum of 8 feet from the bottom of the signal head to the top of the ground surface.
2. 24-inch stop lines required during nighttime operation.

Possible Contract Item:
Traffic Control

LEGEND

- Traffic Signal
- Traffic Sign
- 42" Channelizer
- Work Area
- Direction of Traffic

TIMING FOR ACTUATED SIGNALS
Recommended Settings (secs)

Initial = 12.0
Extension = 2.5
Max. Green = 45.0
Yellow = 4.0
All Red = (see table)

Distance between stop lines	All Red* (secs)	Distance between stop lines	All Red* (secs)
450'	9 - 15	950'	19 - 33
550'	11 - 19	1050'	21 - 36
650'	13 - 22	1150'	23 - 39
750'	15 - 26	1250'	25 - 43
850'	17 - 29	1350'	27 - 46

* All Red values based on operating speeds between 20 mph and 35 mph

Iowa Department of Transportation

STANDARD ROAD PLAN

REVISION	
1	04-17-12

TC-215

SHEET 1 of 1

REVISIONS: Removed "or Vertical Panel" from 42" Channelizer in Legend.

Deanna Maifield
APPROVED BY DESIGN METHODS ENGINEER

LANE CLOSURE WITH SIGNALS (UP TO THREE DAYS)

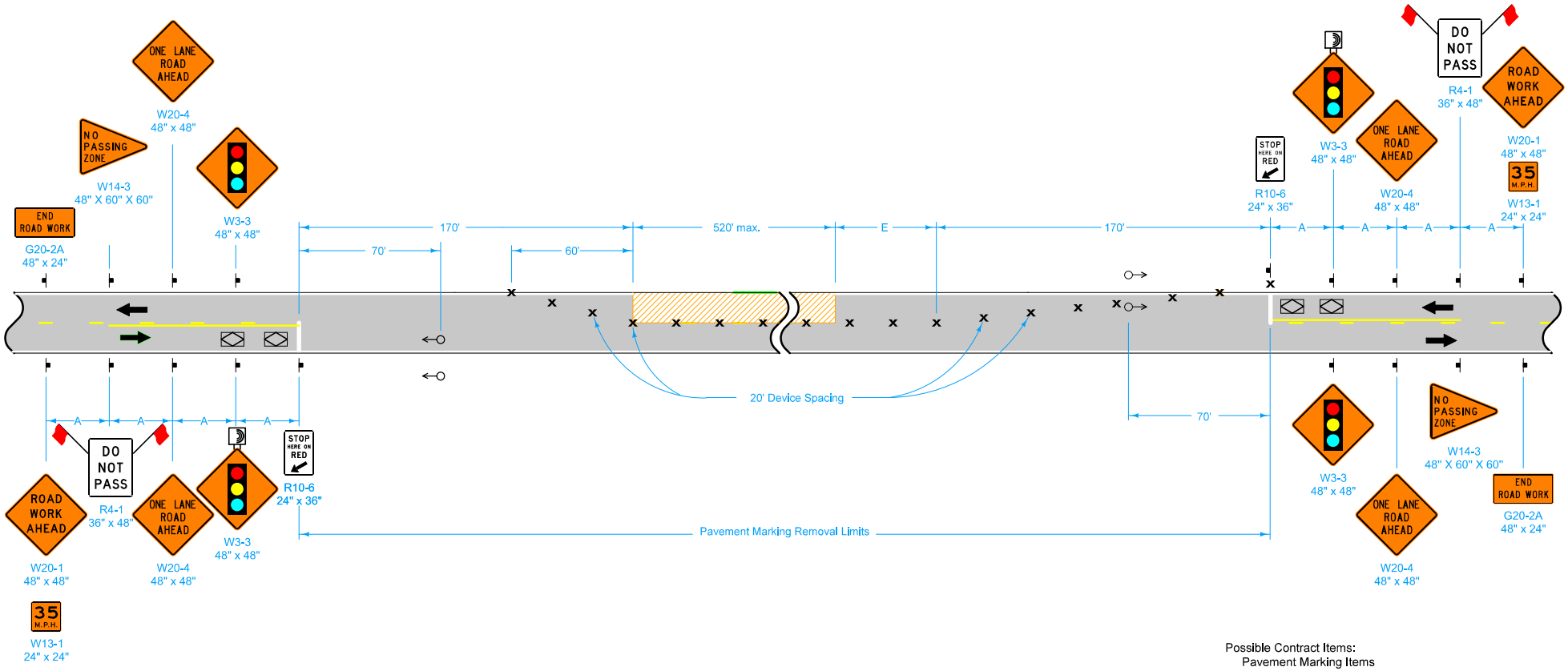

Possible Contract Items:
- Pavement Marking Items
- Pavement Markings Removed
- Temporary Traffic Signals
- Traffic Control

Possible Tabulations:
- 108-22
- 108-28

No drop-offs greater than pavement depth will be allowed during non-working hours.

No vehicles, unattended equipment, materials or stock-piled waste are permitted between the shoulder lines during non-working hours.

LEGEND

- Vehicle Detection Area
- Traffic Sign
- Drum
- Type 'B' High-Intensity Flashing Warning Light
- Work Area
- Temporary Traffic Signal
- Direction of Traffic

TIMING FOR ACTUATED SIGNALS

Recommended Settings, secs.

Initial = 12.0
Extension = 2.5
Maximum Green = 45.0
Yellow = 5.0
All Red = (see table)

Distance Between Stop Lines	All Red (secs.)*
1050'	20.4-35.7
950'	18.5-32.3
850'	17-30
750'	15-27
650'	14-23
550'	12-20

* Range of values are based on operating speeds between 20 and 35 mph

SPEED LIMIT (mph)	A	E
35 or less	250'	0'-50'
40 - 45	350'	0'-100'
50 or greater	500'	100'

Iowa Department of Transportation

STANDARD ROAD PLAN

REVISION 5 04-17-12

TC-216

SHEET 1 of 1

REVISIONS: No significant changes. Changed to color.

Deanna Maifield
APPROVED BY DESIGN METHODS ENGINEER

LANE CLOSURE WITH SIGNALS

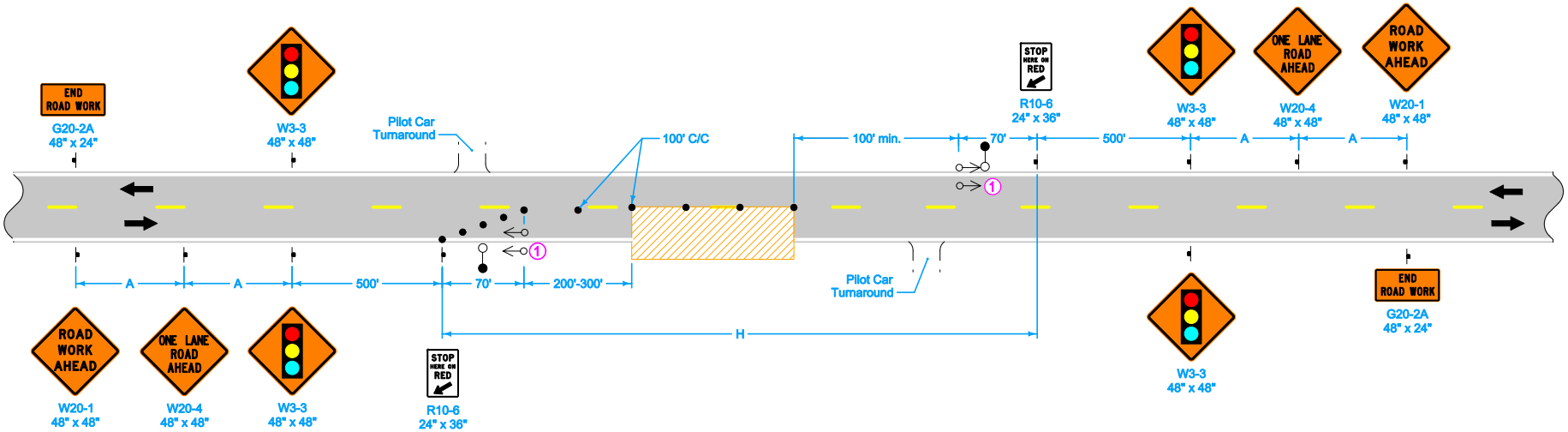

No detection area required.

Timing for Push-button Actuated Signals
- Initial Green = 15 sec.
- Green Ext. = 2.5 sec.
- Yellow = 4.0 sec.

Install push-button actuated traffic signals.
Program signals to rest in RED.
GREEN and GREEN EXTENSION only are initiated by flagger.

(1) In lieu of a trailer or span-wire mounted system, signal heads may be located on the shoulders, one on each side of the roadway. Mount shoulder signal heads a minimum of 8 feet from the bottom of the signal head to the top of the ground surface.

Possible Contract Items:
- Flagger
- Pilot Car
- Traffic Control

LEGEND
- Temporary Floodlighting
- Traffic Signal
- Traffic Sign
- 42" Channelizer
- Work Area
- Direction of Traffic

SPEED LIMIT (mph)	ADT	A	H
50 or greater	up to 2,500	500'	2.5 mi.
	2,500 - 5,000	500'	2.0 mi.
	more than 5,000	1000'	1.5 mi.

Iowa Department of Transportation

STANDARD ROAD PLAN

REVISION	
1	04-17-12

TC-218

SHEET 1 of 1

REVISIONS: Removed "or Vertical Panel" from 42" Channelizer in Legend.

Deanna Maifield
APPROVED BY DESIGN METHODS ENGINEER

LANE CLOSURE WITH PILOT CAR AND FLAGGER OPERATED SIGNALS

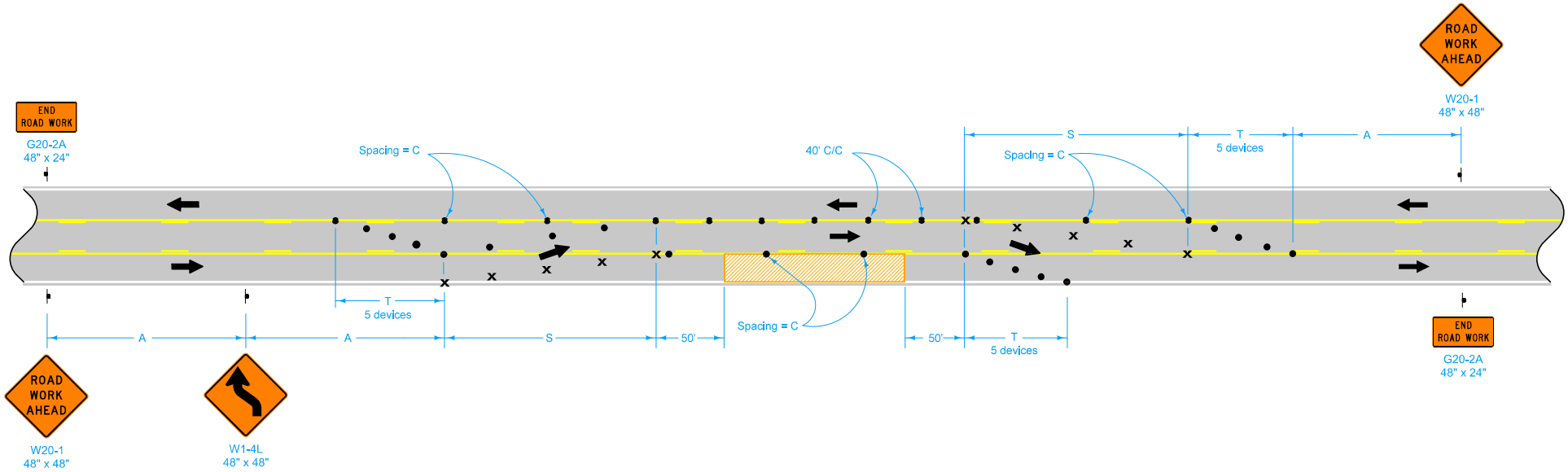

Possible Contract Item:

Traffic Control

LEGEND

- ● 42" Channelizer
- × Drum (1)
- Traffic Sign
- Work Area
- Direction of Traffic

SPEED LIMIT (mph)	A	C	D	S	T
25 or less	100'	40'	25'	100'	50'
30 - 35	250'	40'	30'	120'	50'
40 - 45	350'	80'	40'	280'	100'
50 or greater	500'	100'	50'	350'	100'

(1) Spacing = D for all drums.

Iowa Department of Transportation

STANDARD ROAD PLAN

REVISION 3 04-17-12

TC-228

SHEET 1 of 1

REVISIONS: Remove "or Vertical Panel" from 42" Channelizer in Legend.

Deanna Maifield

APPROVED BY DESIGN METHODS ENGINEER

LANE CLOSURE UTILIZING CONTINUOUS TWO-WAY LEFT-TURN LANE

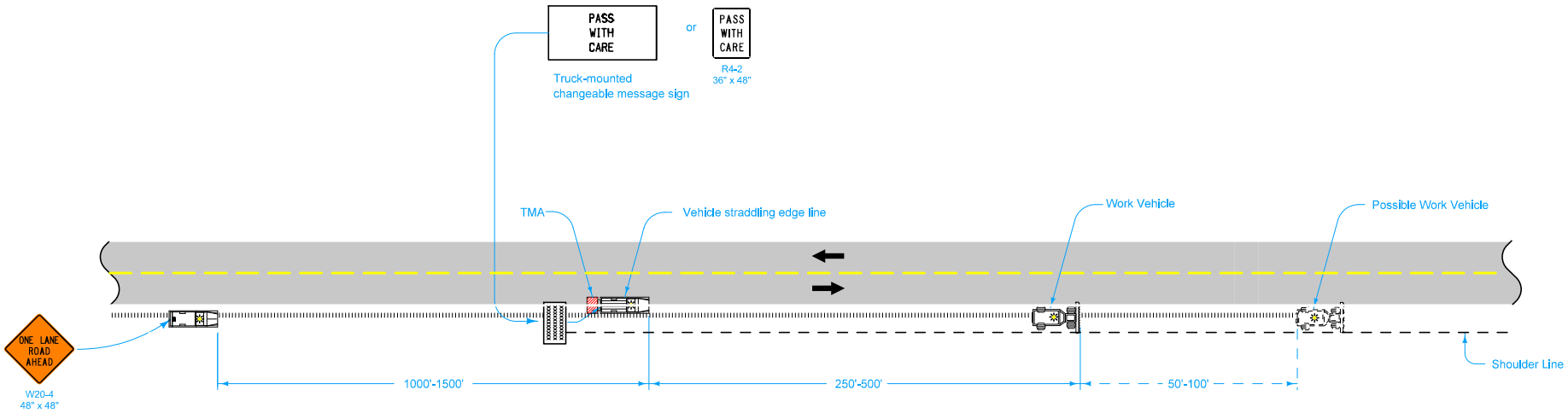

Possible Contract Item:

Traffic Control

All vehicles shall be equipped with an amber revolving light or an amber strobe light.

When fog sealing the milled rumble strips, place a 48" X 48" FRESH OIL sign (W21-2) at the beginning of the work area. Place additional FRESH OIL signs after each intersection and periodically through the work area so that signs are no more than 2 miles apart.

Operators should adjust their spacing, as necessary, to keep adjacent vehicles within view.

LEGEND

- Traffic Sign
- Truck Mounted Attenuator (TMA)
- Direction of Traffic

Iowa Department of Transportation

STANDARD ROAD PLAN

REVISION	
1	04-17-12

TC-232

SHEET 1 of 1

REVISIONS: No significant changes. Changed to color.

Deanna Maifield
APPROVED BY DESIGN METHODS ENGINEER

SHOULDER RUMBLE STRIP OPERATIONS

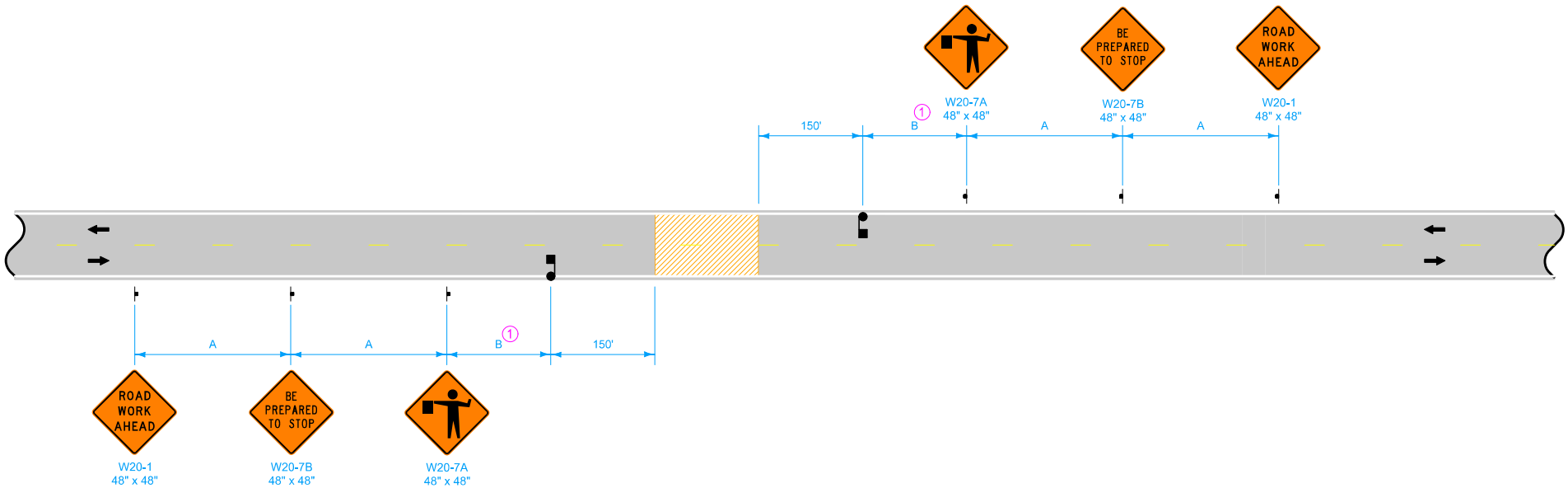

Possible Contract Item:

Traffic Control
Flaggers

LEGEND

- Traffic Sign
- Work Area
- Flagger
- Direction of Traffic

SPEED LIMIT (mph)	A	B 1 (minimum)
35 or less	250'	250'
40 - 45	350'	350'
50 or greater	500'	500'

This layout is intended for a preplanned closure of 20 minutes or less.

1 The Engineer will determine the storage length, B, necessary to accommodate stopped traffic during the closure.

Iowa Department of Transportation

STANDARD ROAD PLAN

REVISION	
2	04-17-12

TC-251

SHEET 1 of 1

REVISIONS: No significant changes. Changed to color.

Deanna Maifield
APPROVED BY DESIGN METHODS ENGINEER

TEMPORARY ROAD CLOSURE

SIGN PLACEMENT ON
TYPE III BARRICADES

Typical Sign Placement

Sign Placement with
Supplemental Sign

Iowa Department of Transportation

STANDARD ROAD PLAN

REVISION	
3	04-17-12

TC-252

SHEET 1 of 3

REVISIONS: Added Road Closure symbol for Safety Closures and graphics to show location of signs on Type III barricade. Changed title.

Deanna Maifield
APPROVED BY DESIGN METHODS ENGINEER

ROUTES CLOSED TO TRAFFIC

SITUATION 1 (RURAL)

Project Route Closure

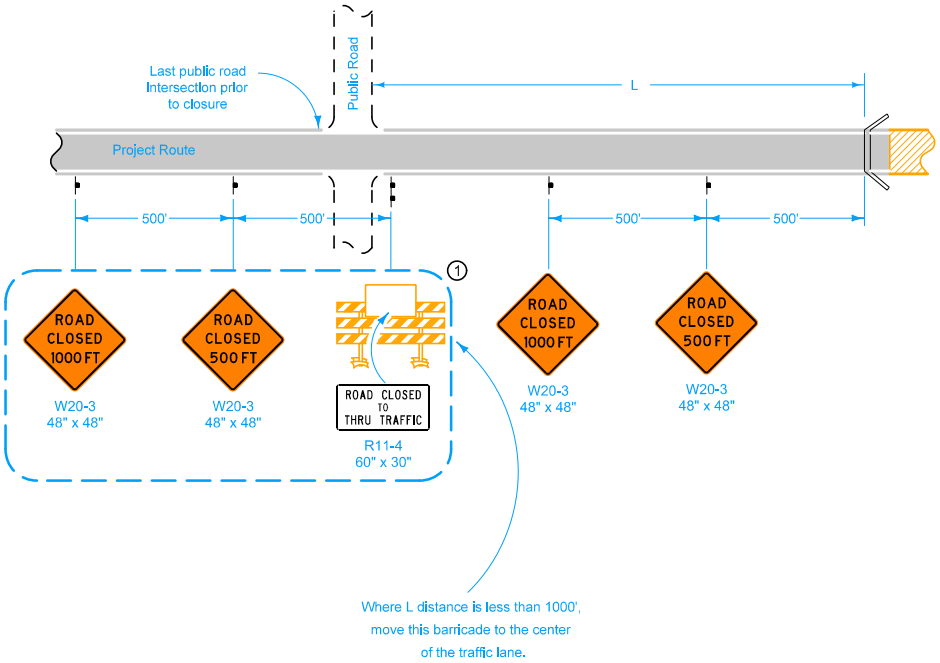

SITUATION 1 (URBAN)

Project Route Closure

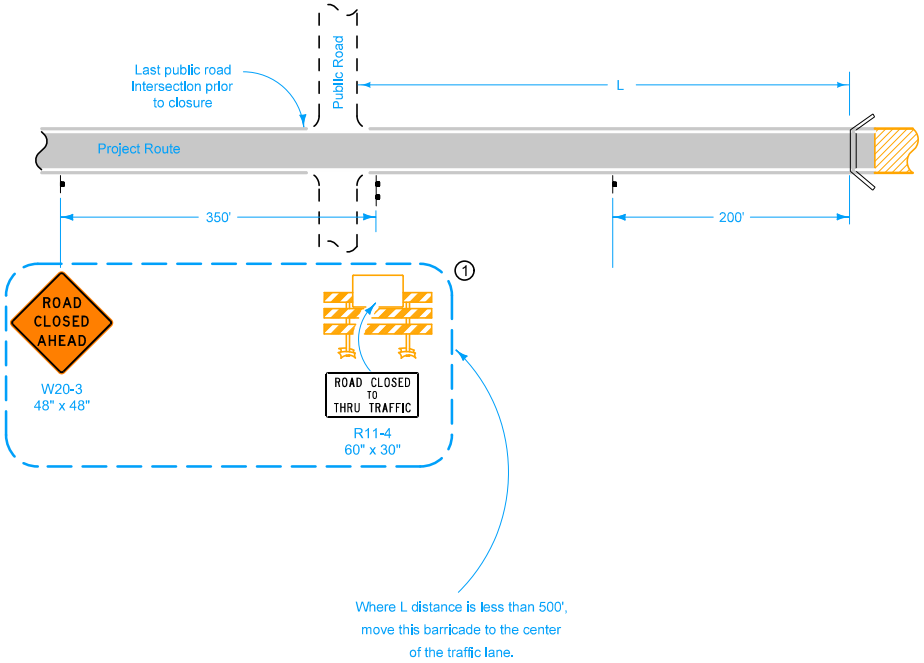

LEGEND

- Traffic Sign
- Type III Barricade
- Work Area
- Road Closure

(1) In situation 1, if the intersection is the point of detour these signs and barricade will become the responsibility of the contracting authority and may be modified by the contracting authority to fit detour signing.

Possible Contract Items:

Traffic Control
Safety Closures

Possible Tabulation:

108-13A

Iowa Department of Transportation

STANDARD ROAD PLAN

REVISION	
3	04-17-12

TC-252

SHEET 2 of 3

REVISIONS: Added Road Closure symbol for Safety Closures and graphics to show location of signs on Type III barricade. Changed title.

Deanna Maifield
APPROVED BY DESIGN METHODS ENGINEER

ROUTES CLOSED TO TRAFFIC

SITUATION 2

Public cross-traffic maintained.
No access to project.

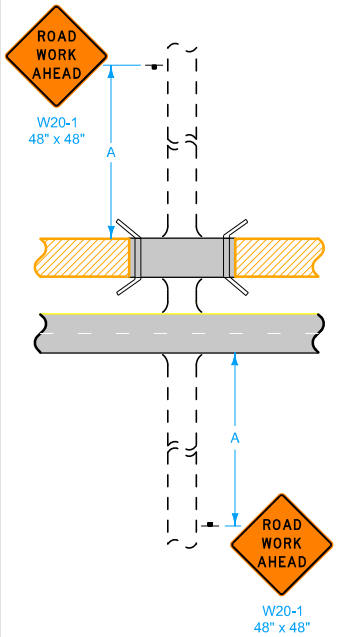

SITUATION 3

No access to project
(Applicable to T-intersections)

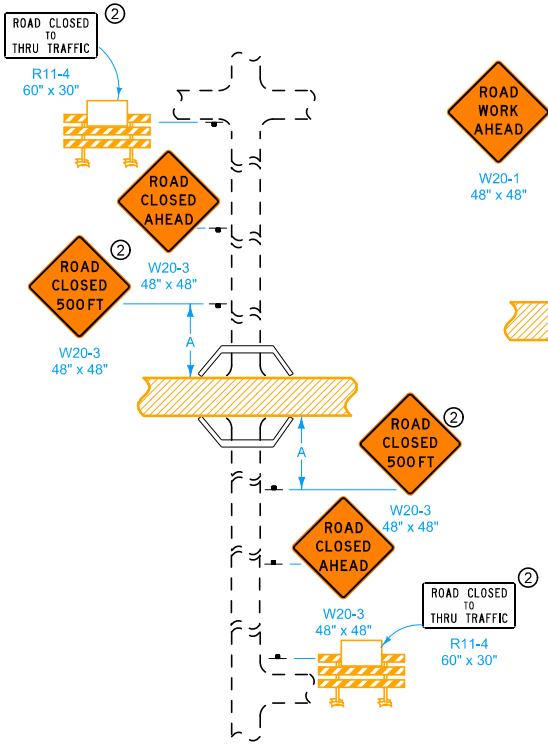

SITUATION 4

Public cross-traffic maintained.
No access to project.

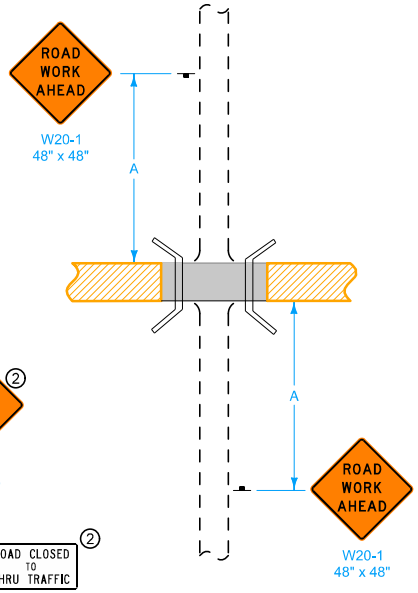

SITUATION 5

Public cross-traffic maintained.
Contractor and resident access.

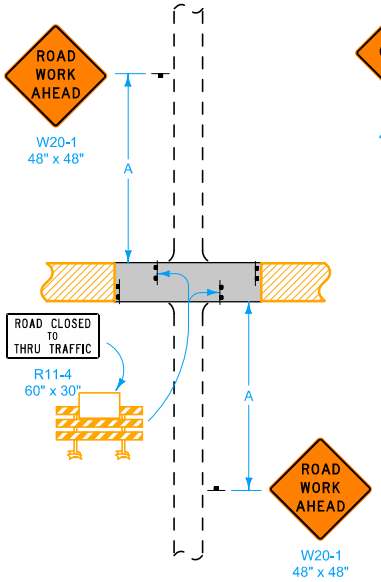

SITUATION 6

No public access. Contractor and resident access only. (Applicable to T-intersections)

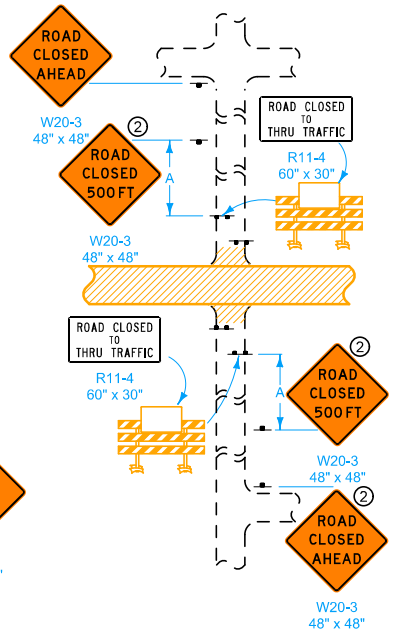

During suspension of work, (such as over winter):

- Use Situation 2 on two-lane to four-lane projects.
- Situation 5 is preferred where cross-traffic is maintained.

(2) In urban locations, remove the ROAD CLOSED 500 FT sign and replace it with the ROAD CLOSED AHEAD sign.

LEGEND

- Traffic Sign
- Type III Barricade
- Work Area
- Road Closure

Location	A
Urban	200'
Rural	500'

Iowa Department of Transportation

STANDARD ROAD PLAN

REVISION	
3	04-17-12

TC-252

SHEET 3 of 3

REVISIONS: Added Road Closure symbol for Safety Closures and graphics to show location of signs on Type III barricade. Changed title.

Deanna Maifield
APPROVED BY DESIGN METHODS ENGINEER

ROUTES CLOSED TO TRAFFIC

TWO-LANE DETOUR

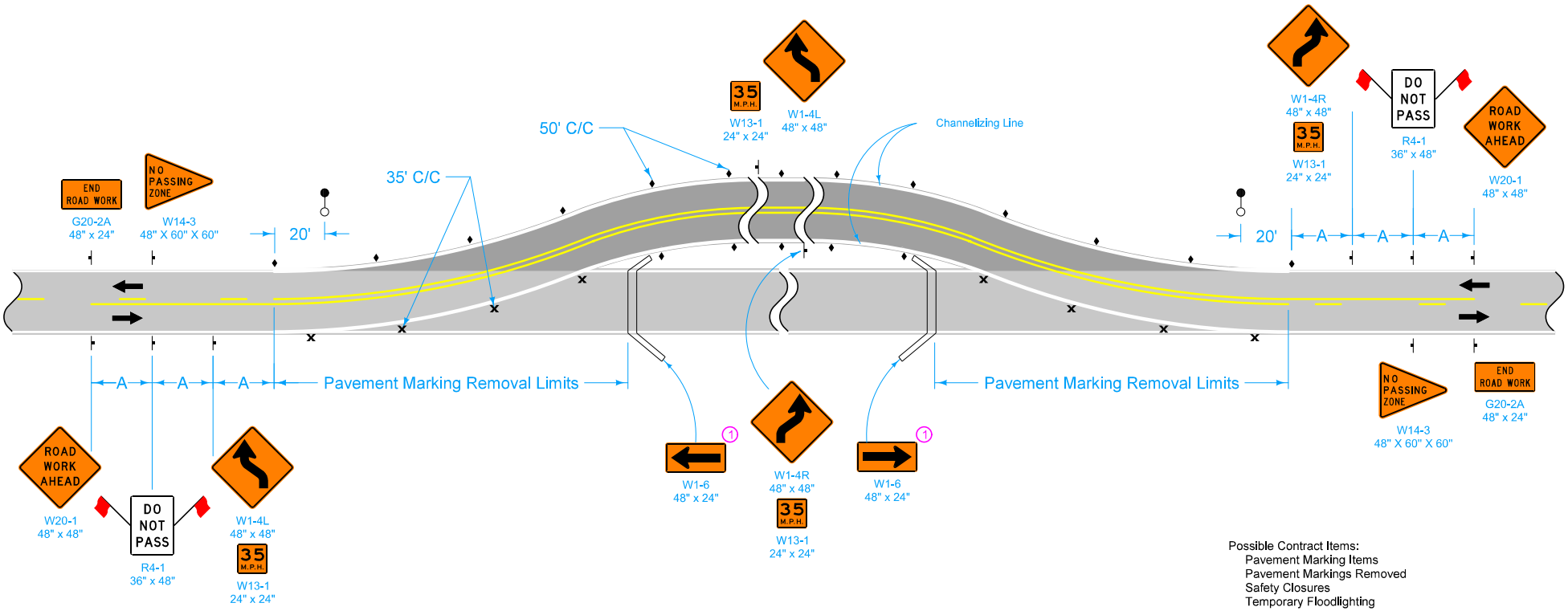

Possible Contract Items:
- Pavement Marking Items
- Pavement Markings Removed
- Safety Closures
- Temporary Floodlighting
- Temporary Delineators
- Traffic Control

Possible Tabulations:
- 108-13A
- 108-18
- 108-22
- 108-27

LEGEND

- Direction of Traffic
- Drum
- Single White Delineators (mount back to back)
- Road Closure
- Temporary Floodlighting
- Traffic Sign

SPEED LIMIT (mph)	A
35 or less	250'
40 - 45	350'
50 or greater	500'

The Engineer may change the advisory speed. If reduced below 35 mph, the Reverse Curve signs (W1-4L and W1-4R) change to Reverse Turn signs (W1-3La and W1-3Ra).

(1) Add below ROAD CLOSED (R11-2) sign already included in Safety Closure.

Iowa Department of Transportation

STANDARD ROAD PLAN

REVISION	
6	04-17-12

TC-253

SHEET 1 of 2

REVISIONS: Added Road Closure symbol for Safety Closures.

Deanna Maifield
APPROVED BY DESIGN METHODS ENGINEER

PAVED ON-SITE DETOUR

ONE-LANE DETOUR

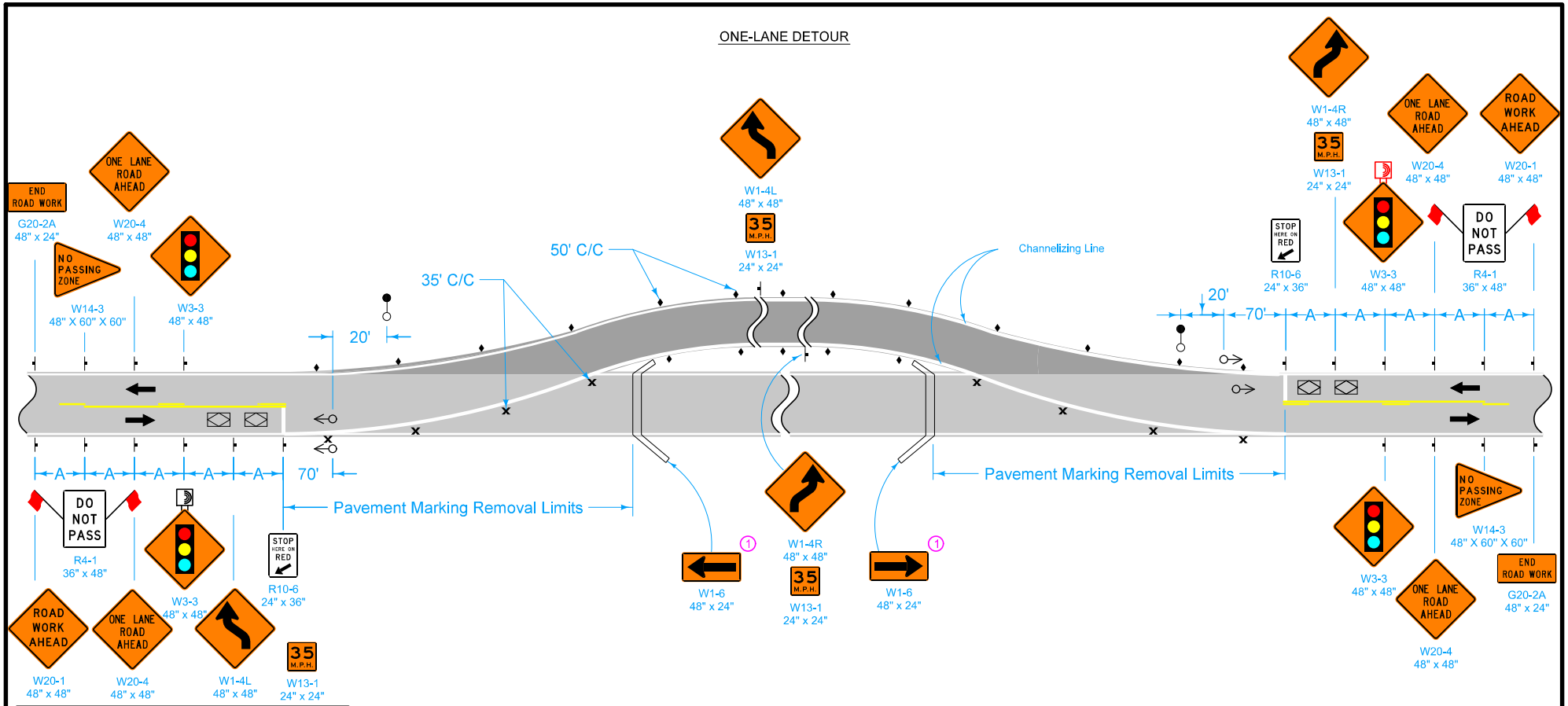

LEGEND

- Direction of Traffic
- Drum
- Single White Delineators (mount back to back)
- Road Closure
- Temporary Floodlighting
- Temporary Traffic Signal
- Traffic Sign
- Type 'B' High-Intensity Flashing Warning Light
- Vehicle Detection Area

(1) Add below ROAD CLOSED (R11-2) sign already included in Safety Closure.

TIMING FOR ACTUATED SIGNALS Recommended Settings, secs. Initial = 12.0 Extension = 2.5 Maximum Green = 45.0 Yellow = 3.0 All Red = (see table)				
	Distance Between Stop Lines	All Red (secs.)*	Distance Between Stop Lines	All Red (secs.)*
	400'	10	900'	21
	500'	12	1000'	23
	600'	14	1100'	25
	700'	16	1200'	28
	800'	19	1300'	30

* Range of values are based on an operating speed of 30 mph

SPEED LIMIT (mph)	A
35 or less	250'
40 - 45	350'
50 or greater	500'

Iowa Department of Transportation

STANDARD ROAD PLAN

REVISION	
6	04-17-12

TC-253

SHEET 2 of 2

REVISIONS: Added Road Closure Symbol for Safety Closures.

Deanna Maifield
APPROVED BY DESIGN METHODS ENGINEER

PAVED ON-SITE DETOUR

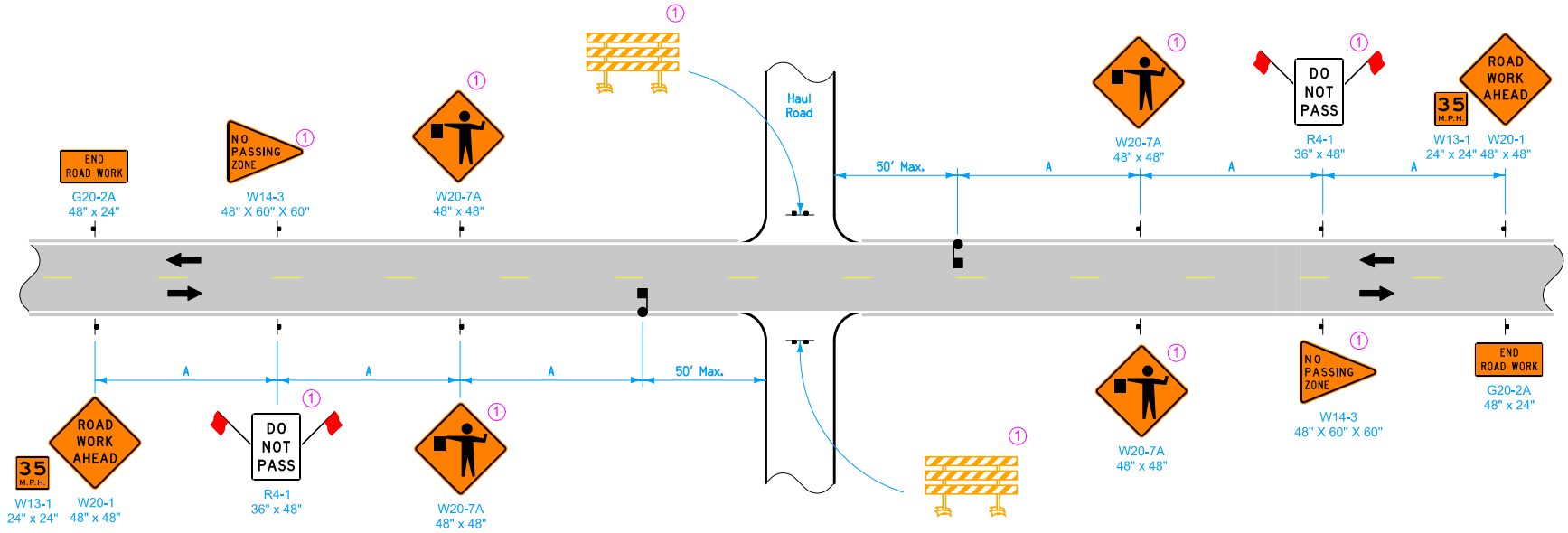

Possible Contract Items:

Traffic Control
Flaggers

(1) During nighttime hours or when the haul road is not in use, Type III Barricades shall be placed as shown and DO NOT PASS, NO PASSING ZONE and Flagger Symbol signs shall be covered or removed.

LEGEND

- Traffic Sign
- Type III Barricade
- Flagger
- Direction of Traffic

SPEED LIMIT (mph)	A
35 or less	250'
40 - 45	350'
50 or greater	500'

Iowa Department of Transportation

STANDARD ROAD PLAN

REVISION	
2	04-17-12

TC-272

SHEET 1 of 1

REVISIONS: No significant changes. Changed to color.

Deanna Maifield
APPROVED BY DESIGN METHODS ENGINEER

UNSIGNALIZED EQUIPMENT CROSSING

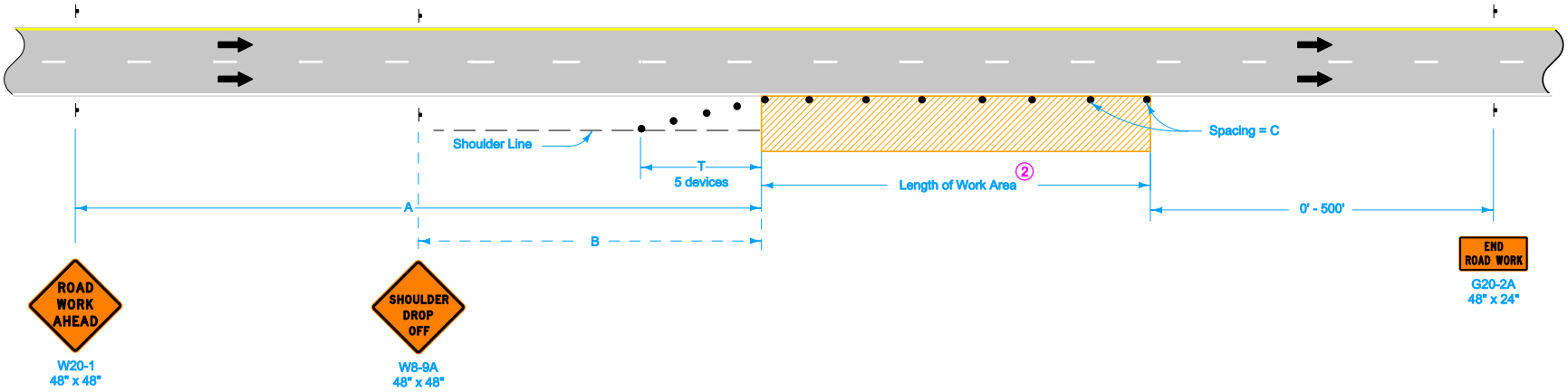

When a pavement edge drop-off exists, install a SHOULDER DROP-OFF sign.

Pavement edge drop-offs greater than a nominal 10 inches will not be allowed during non-working hours.

Shoulder edge drop-offs shall be mitigated according to Article 1107.08.K2 of the Standard Specifications.

Possible Contract Item:
Traffic Control

LEGEND

- Traffic Sign
- 42" Channelizer
- Work Area
- Direction of Traffic

SPEED LIMIT (mph)	A	B	C ②	T
40 or less	500'	250'	40'	100'
45 - 50	700'	350'	80' ①	200'
55 - 60	1500'	500'	100' ①	200'
65 - 70	1500'	500'	100' ①	230'

① When the length of a pavement edge drop-off is 1000 feet or less, the temporary fillet requirement of Article 1107.08 of the Standard Specifications does not apply.

Space devices at 40 feet.

② For work areas less than 200 feet long, use channelizers spaced at 20 foot centers or use a vehicle with an amber revolving light or amber strobe light.

Iowa Department of Transportation

STANDARD ROAD PLAN

REVISION	
4	04-17-12

TC-402

SHEET 1 of 1

REVISIONS: Removed "or Vertical Panel" from 42" Channelizer in Legend.

Deanna Maifield
APPROVED BY DESIGN METHODS ENGINEER

SHOULDER CLOSURE (MULTI-LANE)

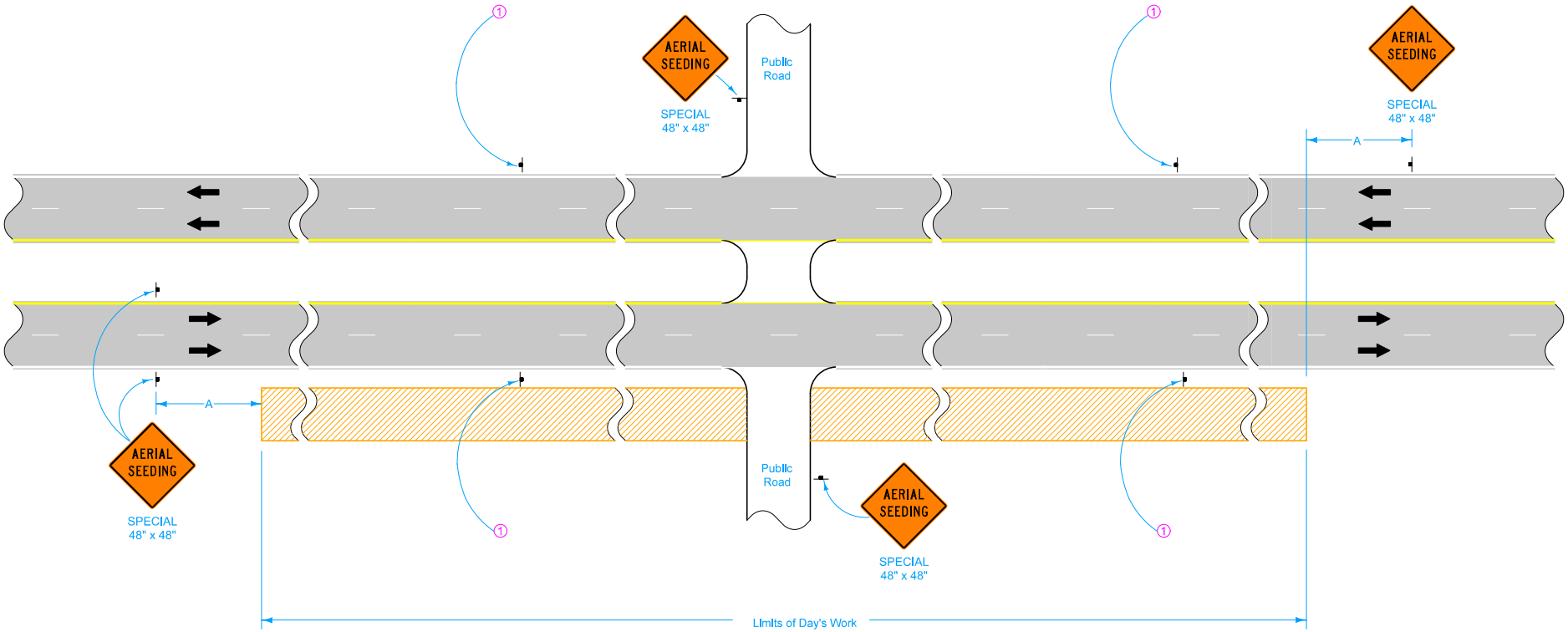

Possible Contract Item:

Traffic Control

1 AERIAL SEEDING signs shall be placed along the mainline at a maximum spacing of 3 miles.

LEGEND

- Traffic Sign
- Work Area
- Direction of Traffic

SPEED LIMIT (mph)	A
35 or less	250'
40 - 45	500'
50 or greater	500'

Iowa Department of Transportation

STANDARD ROAD PLAN

REVISION	
2	04-17-12

TC-403

SHEET 1 of 1

REVISIONS: No significant changes. Changed to color.

Deanna Maifield

APPROVED BY DESIGN METHODS ENGINEER

AERIAL SEEDING OPERATIONS

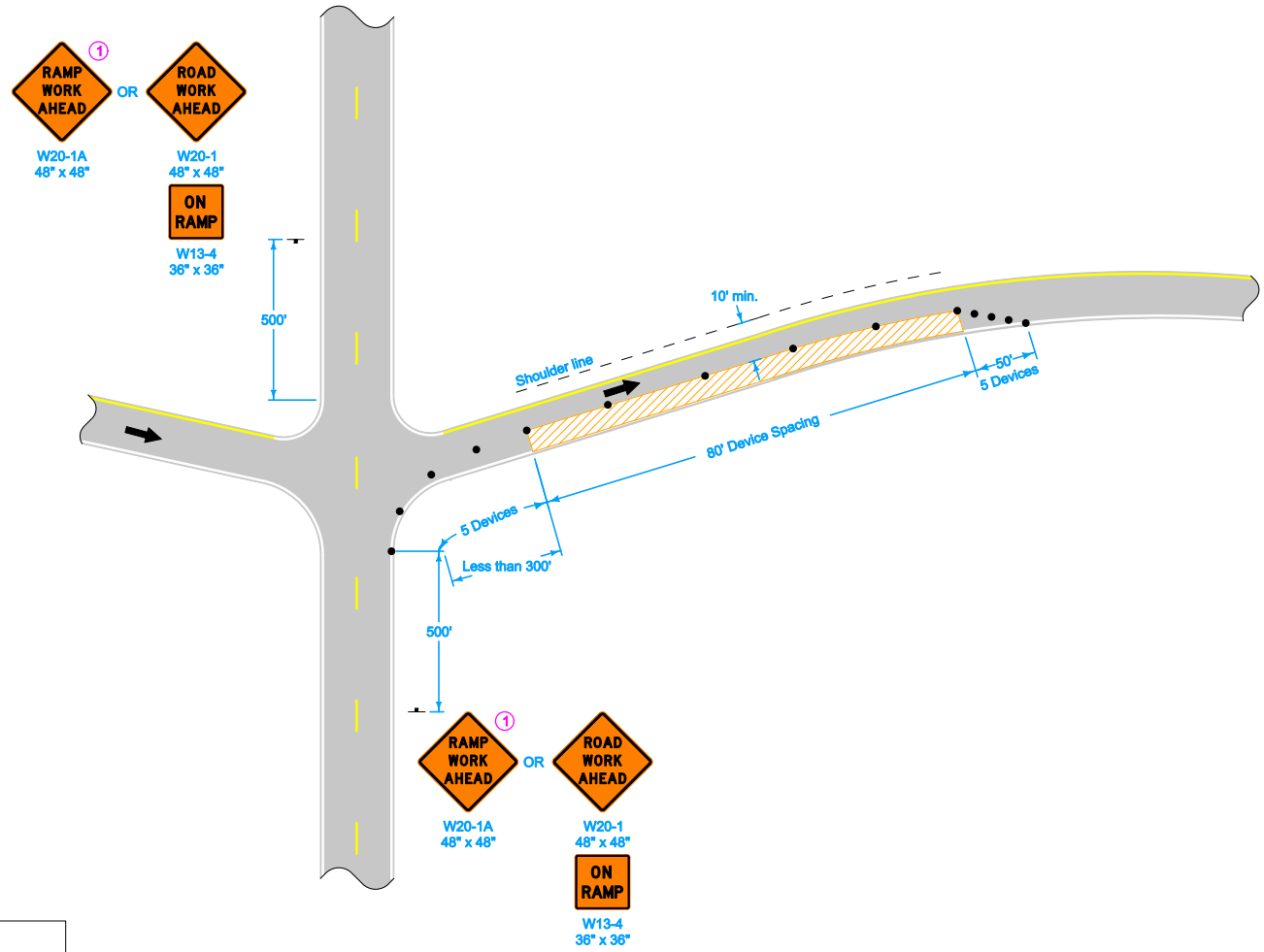

(1) Refer to SI-881 for sign details.

LEGEND

- Traffic Sign
- 42" Channelizer
- Direction of Traffic
- Work Area

Possible Contract Item:
Traffic Control

Iowa Department of Transportation

STANDARD ROAD PLAN

REVISION	
2	04-17-12

TC-416

SHEET 1 of 4

REVISIONS: Removed "or Vertical Panel" from 42" Channelizer in Legend.

Deanna Maifield
APPROVED BY DESIGN METHODS ENGINEER

PARTIAL LANE CLOSURE ON RAMPS

(1) Refer to SI-881 for sign details.

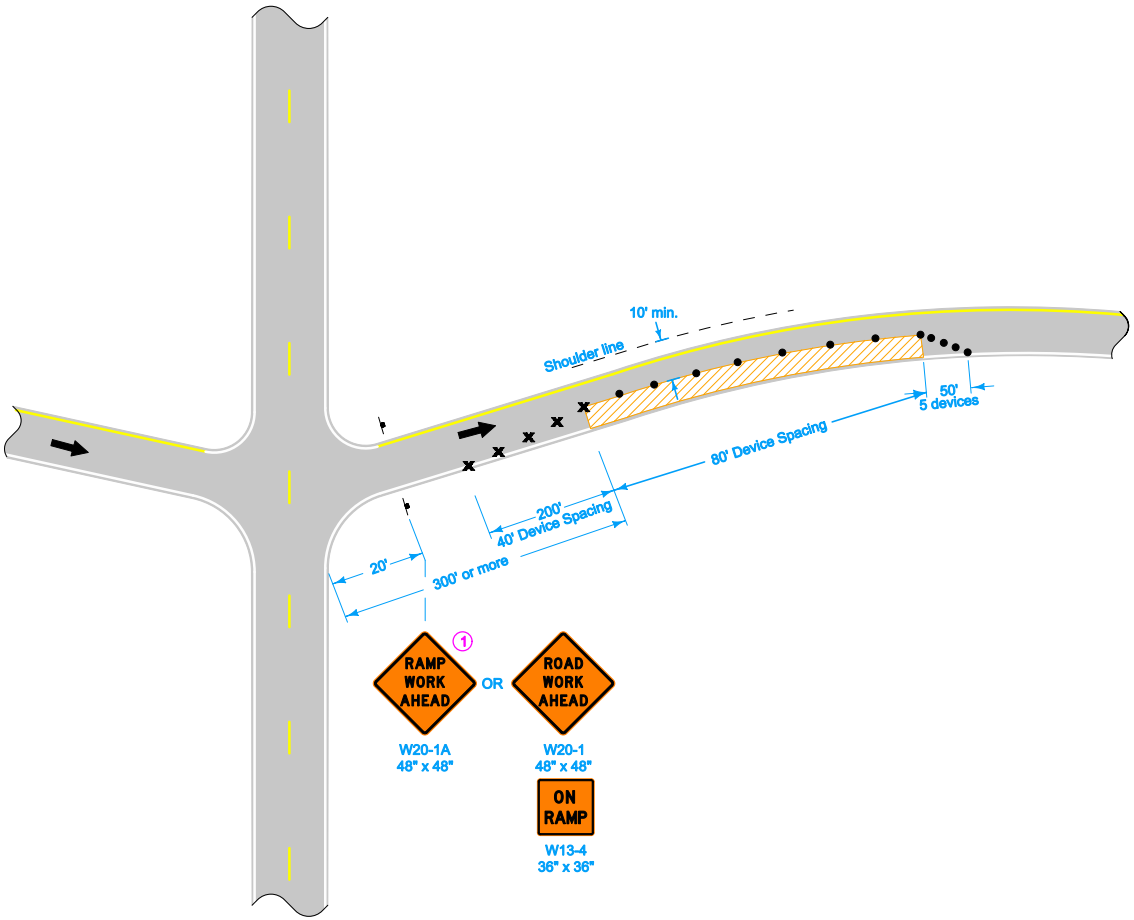

LEGEND

- Drum
- Traffic Sign
- 42" Channelizer
- Direction of Traffic
- Work Area

Iowa Department of Transportation

STANDARD ROAD PLAN

REVISION	
2	04-17-12

TC-416

SHEET 2 of 4

REVISIONS: Removed "or Vertical Panel" from 42" Channelizer in Legend.

Deanna Maifield
APPROVED BY DESIGN METHODS ENGINEER

PARTIAL LANE CLOSURE ON RAMPS

① Refer to SI-881 for sign details.

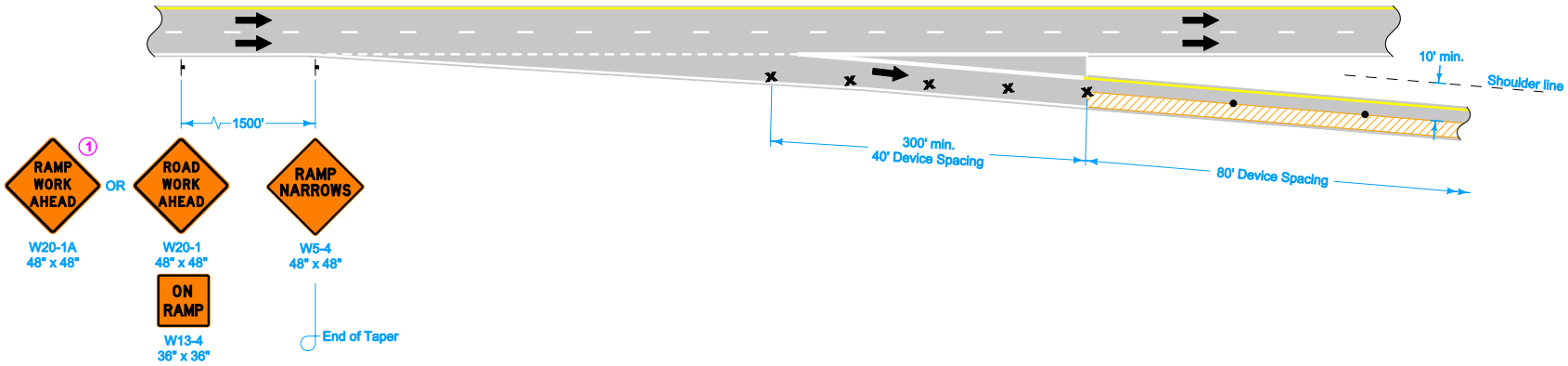

LEGEND

- Drum
- Traffic Sign
- 42" Channelizer
- Direction of Traffic
- Work Area

Iowa Department of Transportation

STANDARD ROAD PLAN

REVISION	
2	04-17-12

TC-416

SHEET 3 of 4

REVISIONS: Removed "or Vertical Panel" from 42" Channelizer in Legend.

Deanna Maifield
APPROVED BY DESIGN METHODS ENGINEER

PARTIAL LANE CLOSURE ON RAMPS

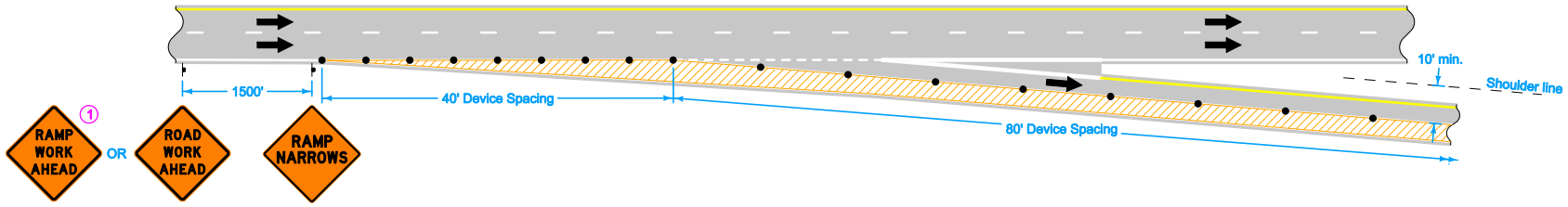

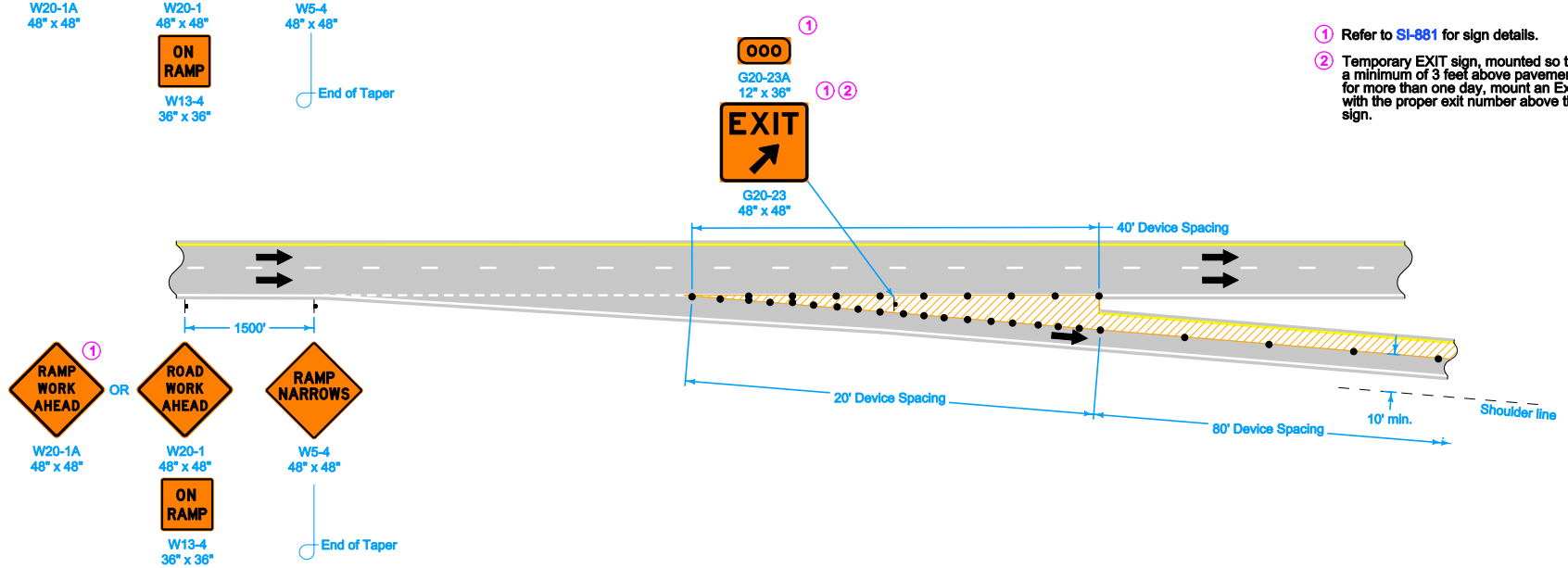

1. Refer to SI-881 for sign details.
2. Temporary EXIT sign, mounted so that bottom of sign is a minimum of 3 feet above pavement surface. If in place for more than one day, mount an Exit Number Panel with the proper exit number above the temporary EXIT sign.

LEGEND

- Traffic Sign
- 42" Channelizer
- Direction of Traffic
- Work Area

Iowa Department of Transportation

STANDARD ROAD PLAN

REVISION	
2	04-17-12

TC-416

SHEET 4 of 4

REVISIONS: Removed "or Vertical Panel" from 42" Channelizer in Legend.

Deanna Maifield
APPROVED BY DESIGN METHODS ENGINEER

PARTIAL LANE CLOSURE ON RAMPS

(1) A vehicle with an amber Vehicle Warning Light may be substituted for the Type III barricade.

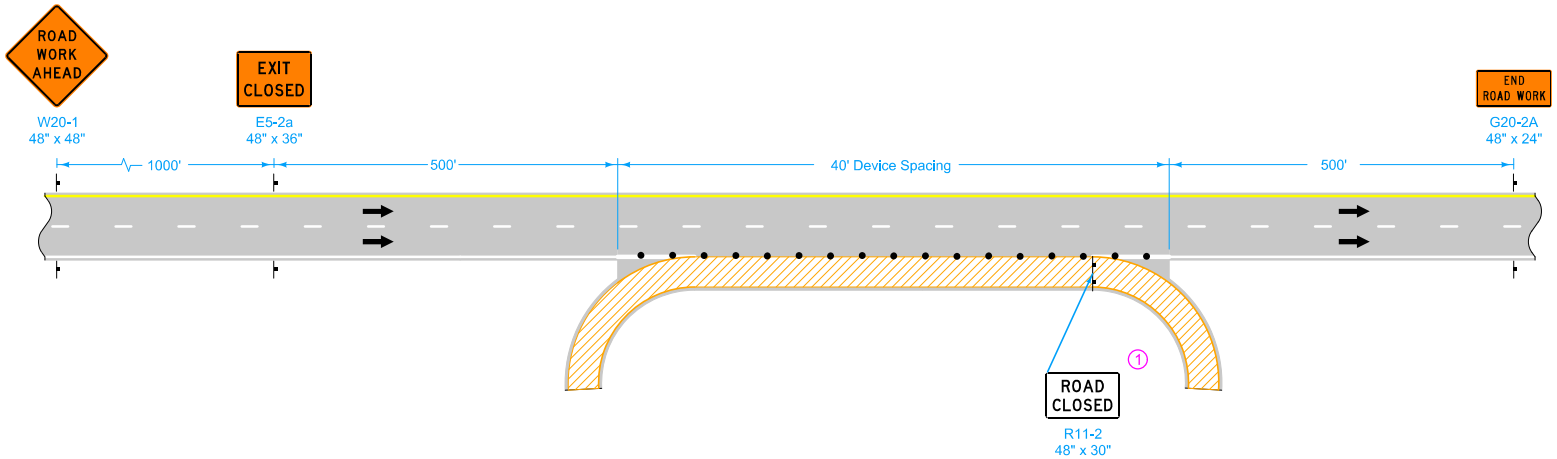

EXIT RAMP CLOSURE

Possible Contract Items:
Safety Closure
Traffic Control

Possible Tabulation:
108-13A

LEGEND

- Type III Barricade
- Traffic Sign
- 42" Channelizer
- Direction of Traffic
- Work Area

Iowa Department of Transportation

STANDARD ROAD PLAN

REVISION	
2	04-17-12

TC-417

SHEET 1 of 3

REVISIONS: Removed "or Vertical Panel" from 42" Channelizer in Legend.

Deanna Maifield
APPROVED BY DESIGN METHODS ENGINEER

RAMP CLOSURE

(1) A vehicle with an amber Vehicle Warning Light may be substituted for the Type III barricade.

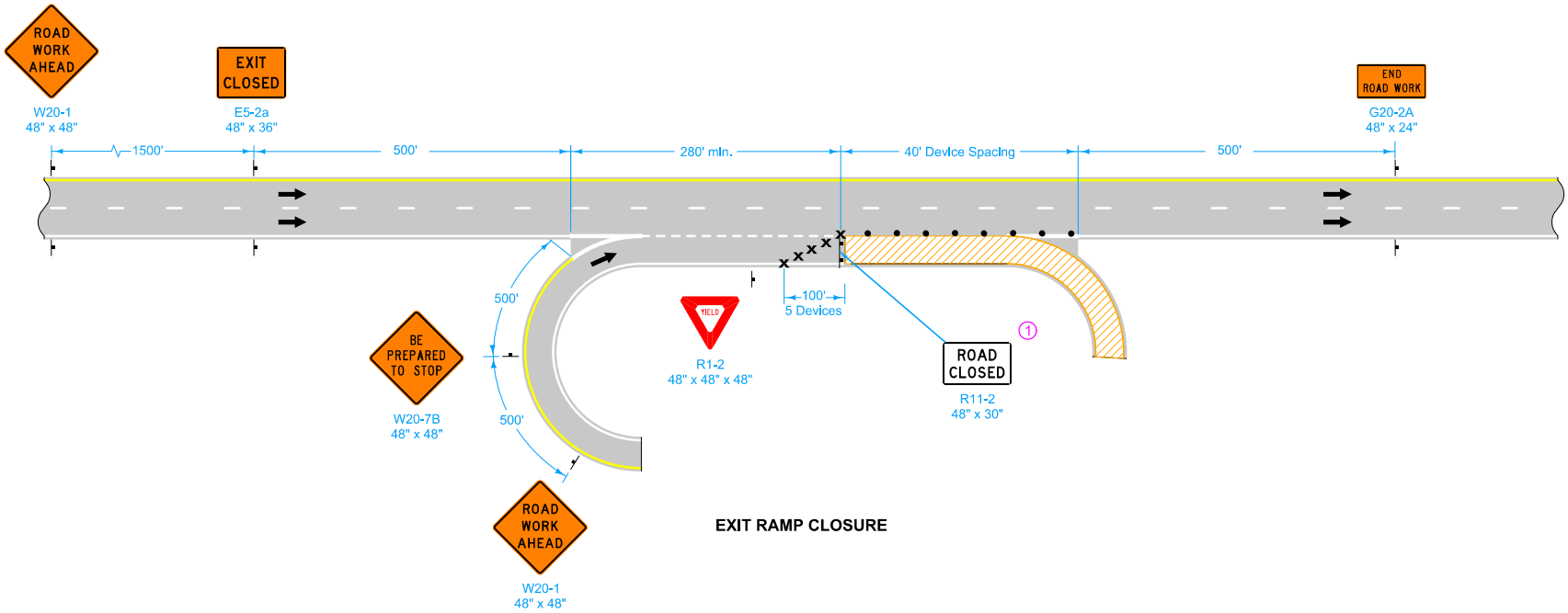

EXIT RAMP CLOSURE

LEGEND

- Type III Barricade
- Traffic Sign
- Drum
- 42" Channelizer
- Direction of Traffic
- Work Area

Iowa Department of Transportation

STANDARD ROAD PLAN

REVISION	
2	04-17-12

TC-417

SHEET 2 of 3

REVISIONS: Removed "or Vertical Panel" from 42" Channelizer in Legend.

Deanna Maifield
APPROVED BY DESIGN METHODS ENGINEER

RAMP CLOSURE

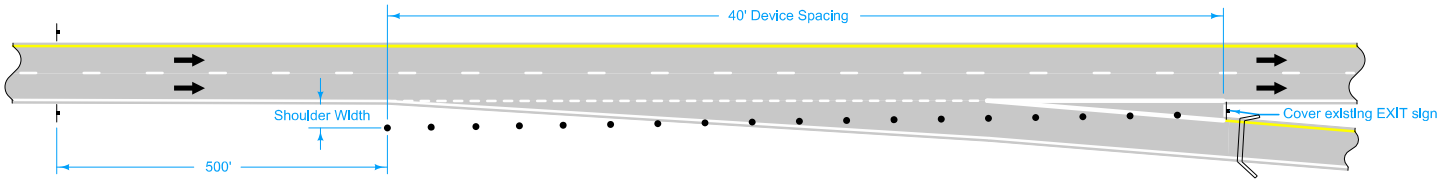

E5-2a
48" x 36"

EXIT RAMP CLOSURE

LEGEND

- Road Closure
- Traffic Sign
- 42" Channelizer
- Direction of Traffic

Iowa Department of Transportation

STANDARD ROAD PLAN

REVISION	
2	04-17-12

TC-417

SHEET 3 of 3

REVISIONS: Removed "or Vertical Panel" from 42" Channelizer in Legend.

Deanna Maifield
APPROVED BY DESIGN METHODS ENGINEER

RAMP CLOSURE

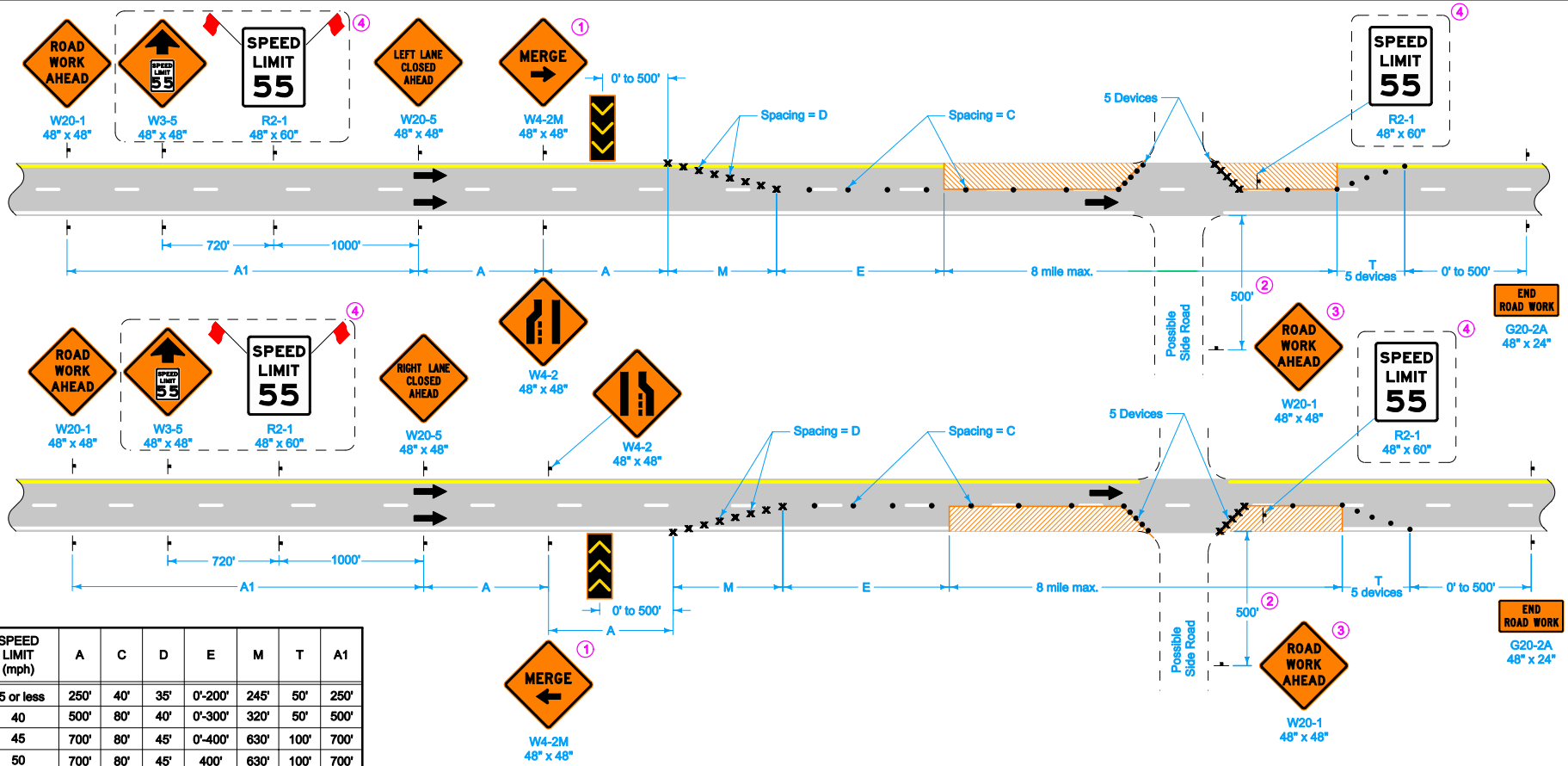

SPEED LIMIT (mph)	A	C	D	E	M	T	A1
35 or less	250'	40'	35'	0'-200'	245'	50'	250'
40	500'	80'	40'	0'-300'	320'	50'	500'
45	700'	80'	45'	0'-400'	630'	100'	700'
50	700'	80'	45'	400'	630'	100'	700'
55 - 60	1000'	100'	55'	600'	770'	100'	2000'
65 - 70	1000'	100'	65'	700'	910'	100'	2000'

LEGEND

- Direction Of Traffic
- Traffic Sign
- Drum
- 42" Channelizer
- Arrow Display
- Work Area

When the Average Daily Traffic (ADT) exceeds 20,000 vehicles per day or when a traffic queue extends beyond the advanced signing, place RIGHT/LEFT LANE CLOSED 4 MILES and RIGHT/LEFT LANE CLOSED 2 MILES signs (W20-5) on both sides of the roadway 4 miles and 2 miles in advance of the lane closure, respectively, as appropriate.

Where there is a lane line drop-off or rise, do not allow traffic to cross over the drop-off or rise; except for ramp locations where a BUMP (W8-1) sign is placed.

Drop-offs greater than a nominal 4 inches are not allowed during non-working hours.

1. Refer to SI-881 for sign details.
2. Where side road speed limit is 40 mph or less, a distance of 200 feet is allowed.
3. Place a ROAD WORK AHEAD sign on the opposite side of the intersection in a similar location.
4. For roadways with a posted speed limit of 60 mph or greater before road work:
   - Place SPEED LIMIT 55 signs prior to the lane closure as shown.
   - When the length of closure is greater than 1 mile, install SPEED LIMIT 55 signs in the closed lane at 1-mile intervals.
   - Remove or cover all existing signs that conflict with 55 mph speed limit while 55 mph speed limit is in effect.

Possible Contract Item:
Traffic Control

Iowa Department of Transportation

STANDARD ROAD PLAN

REVISION	
6	04-17-12

TC-418

SHEET 1 of 1

REVISIONS: Removed "or Vertical Panel" from Channelizer in Legend. Modified circle notes. Added Reduced Speed Ahead signs.

Deanna Maifield
APPROVED BY DESIGN METHODS ENGINEER

LANE CLOSURE ON DIVIDED HIGHWAY

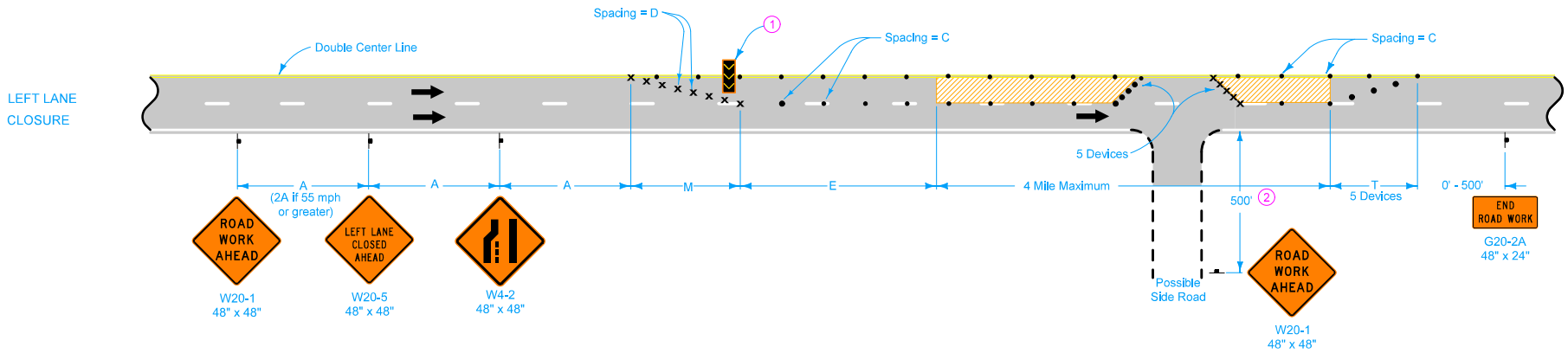

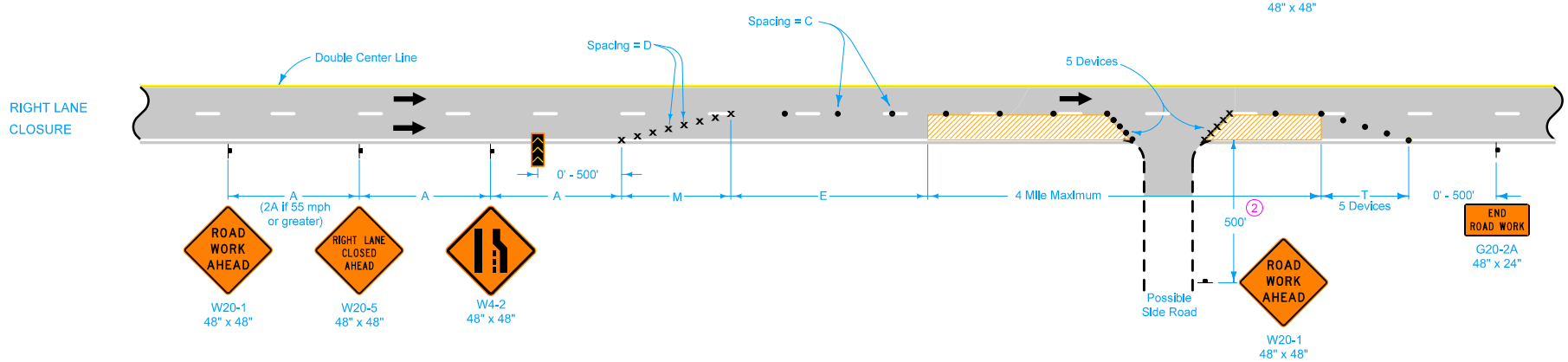

Possible Contract Item:

Traffic Control

LEGEND

- Traffic Sign
- Drum
- 42" Channelizer
- Arrow Panel
- Work Area
- Direction of Traffic

SPEED LIMIT (mph)	A	C	D	E	M	T
35 or less	250'	40'	35'	0'-200'	245'	50'
40	500'	80'	40'	0'-300'	320'	50'
45	700'	80'	45'	0'-400'	630'	100'
50	700'	80'	45'	400'	630'	100'
55 - 60	1000'	100'	55'	600'	770'	100'

Where there is a lane line drop-off or rise, do not allow traffic to cross over the drop-off or rise; except for ramp locations where a BUMP (W8-1) sign is placed.

Drop-offs greater than a nominal 4 inches are not allowed during non-working hours.

1. Place arrow panel within the closed lane behind the drums and as close to the beginning of the taper as practical.
2. Where side road speed limit is 40 mph or less, a distance of 200 feet is allowed.

Iowa Department of Transportation

STANDARD ROAD PLAN

REVISION 4 04-17-12

TC-419

SHEET 1 of 1

REVISIONS: Removed "or Vertical Panel" from 42" Channelizer in Legend. Incorporated circle note 1 in to Section 2528 of the Specifications.

Deanna Maifield

APPROVED BY DESIGN METHODS ENGINEER

LANE CLOSURE ON UNDIVIDED HIGHWAY

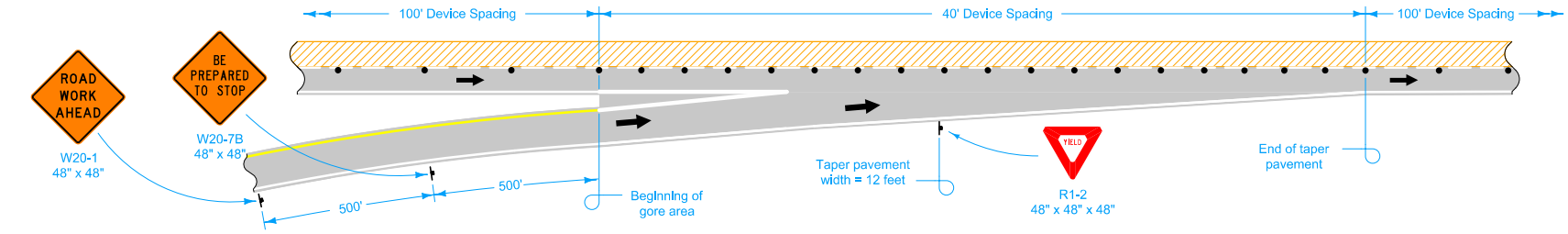

LEFT LANE CLOSURE THROUGH ENTRANCE RAMP

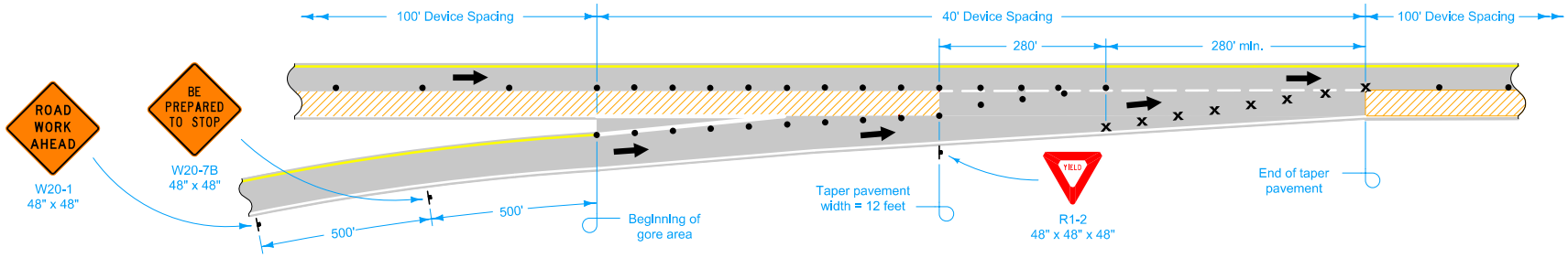

RIGHT LANE CLOSURE THROUGH ENTRANCE RAMP

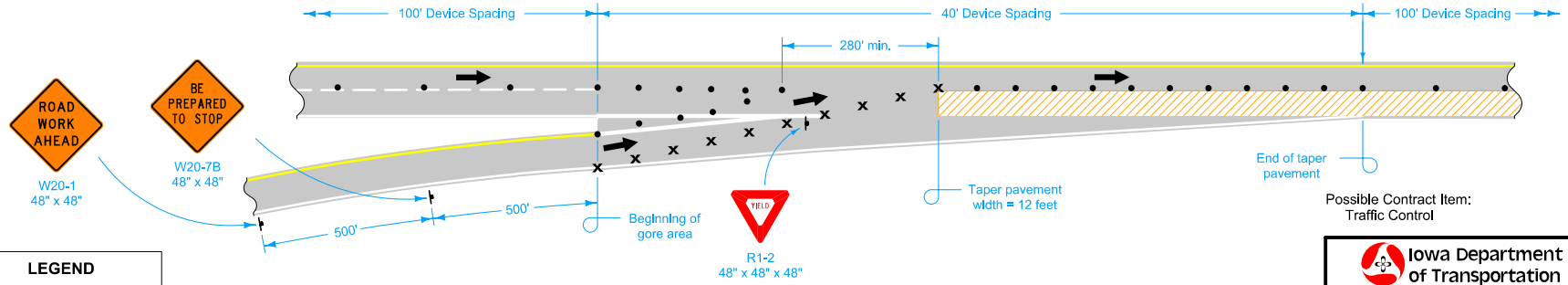

Possible Contract Item:
Traffic Control

STAGING THROUGH ENTRANCE RAMP

LEGEND

- × Drum
- Traffic Sign
- • 42" Channelizer
- Direction of Traffic
- Work Area

Iowa Department of Transportation

STANDARD ROAD PLAN

REVISION	
5	04-17-12

TC-420

SHEET 1 of 5

REVISIONS: Removed "or Vertical Panel" from 42" Channelizer in Legend.

Deanna Maifield
APPROVED BY DESIGN METHODS ENGINEER

LANE CLOSURE AT RAMPS

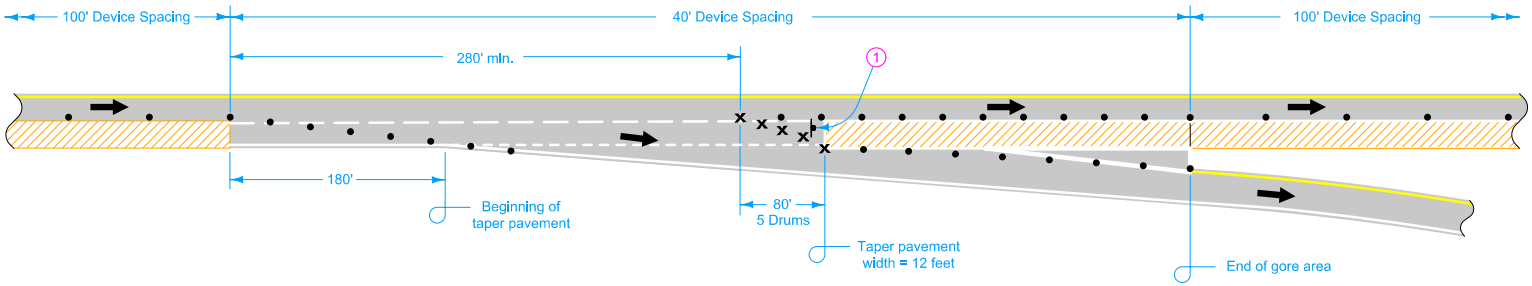

RIGHT LANE CLOSURE THROUGH EXIT RAMP

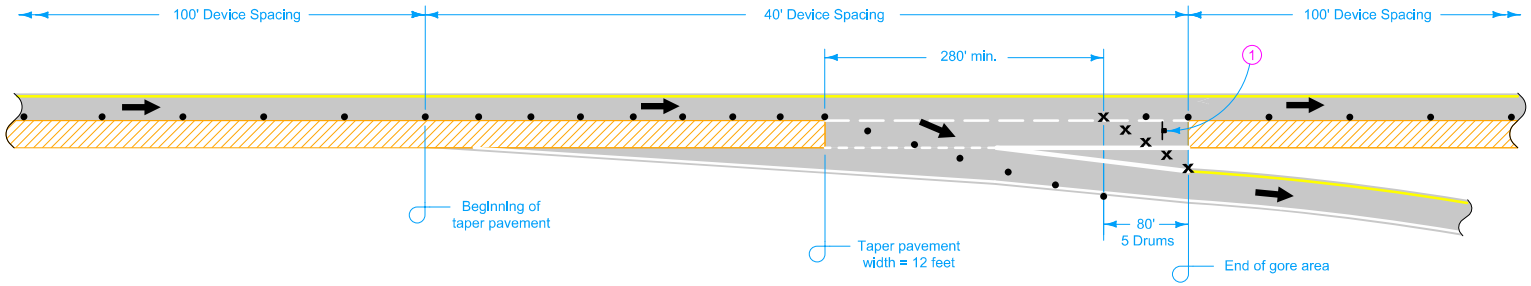

STAGING THROUGH EXIT RAMP

LEGEND

- × Drum
- Traffic Sign
- • 42" Channelizer
- Direction of Traffic
- Work Area

(1) Temporary EXIT sign, mounted so that bottom of sign is a minimum of 3 feet above pavement surface. If in place for more than one day, mount an Exit Number Panel with the proper exit number above the temporary EXIT sign. See SI-881 for details.

Iowa Department of Transportation

STANDARD ROAD PLAN

REVISION	
5	04-17-12

TC-420

SHEET 2 of 5

REVISIONS: Removed "or Vertical Panel" from 42" Channelizer in Legend.

Deanna Maifield
APPROVED BY DESIGN METHODS ENGINEER

LANE CLOSURE AT RAMPS

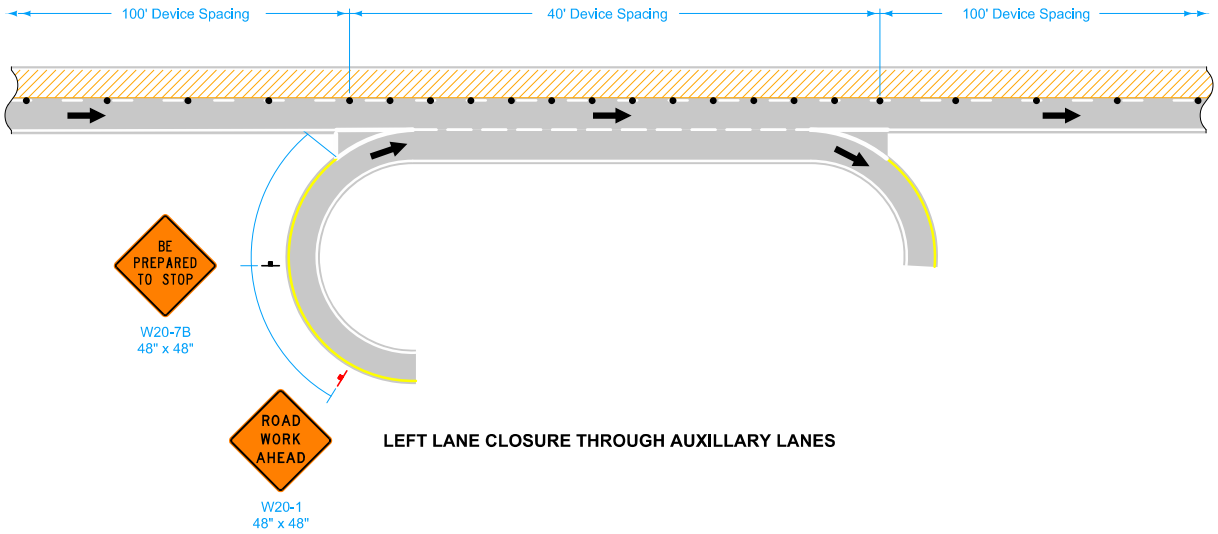

LEFT LANE CLOSURE THROUGH AUXILLARY LANES

LEGEND

- × Drum
- Traffic Sign
- • 42" Channellzer
- Direction of Traffic
- Work Area

Iowa Department of Transportation

STANDARD ROAD PLAN

REVISION	
5	04-17-12

TC-420

SHEET 3 of 5

REVISIONS: Removed "or Vertical Panel" from 42" Channellzer In Legend.

Deanna Maifield
APPROVED BY DESIGN METHODS ENGINEER

LANE CLOSURE AT RAMPS

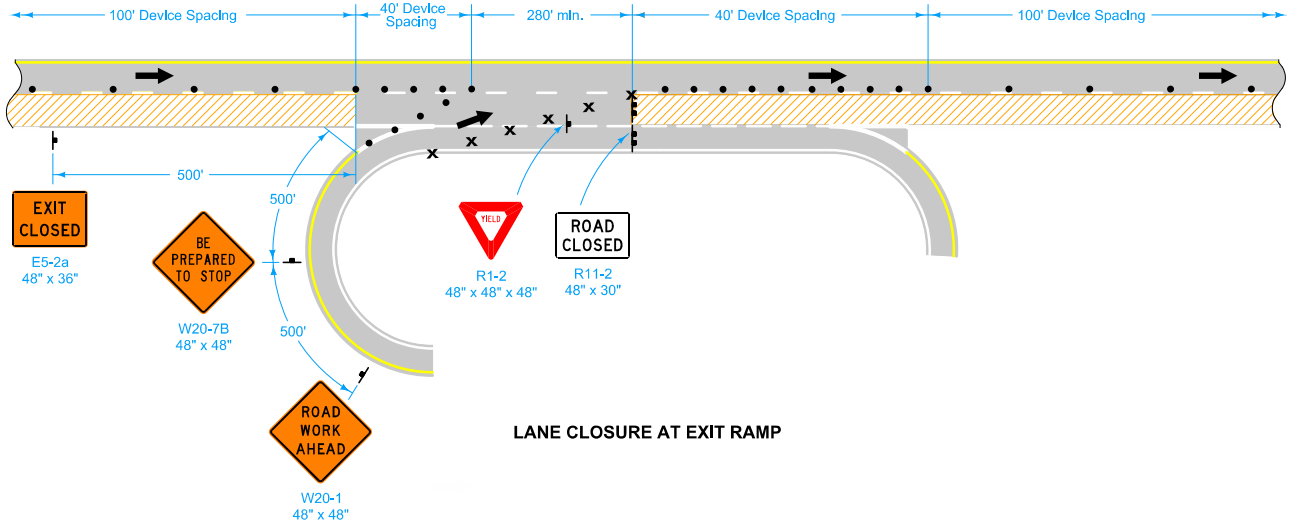

LANE CLOSURE AT EXIT RAMP

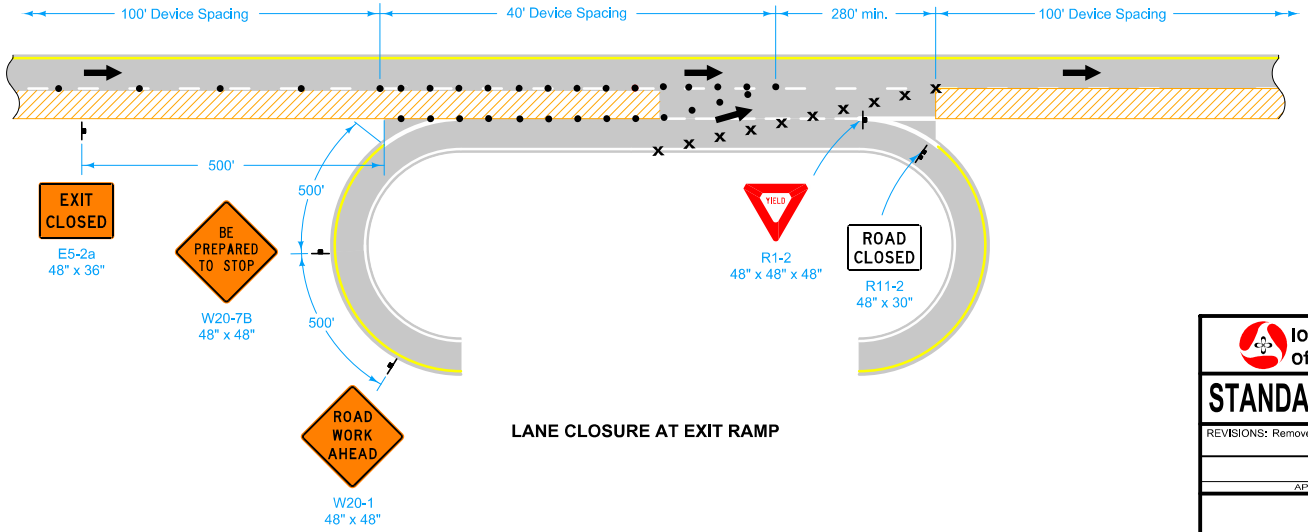

LANE CLOSURE AT EXIT RAMP

LEGEND

- × Drum
- Traffic Sign
- • 42" Channellzer
- Direction of Traffic
- Work Area

Iowa Department of Transportation

STANDARD ROAD PLAN

REVISION	
5	04-17-12

TC-420

SHEET 4 of 5

REVISIONS: Removed "or Vertical Panel" from 42" Channellzer In Legend.

Deanna Maifield
APPROVED BY DESIGN METHODS ENGINEER

LANE CLOSURE AT RAMPS

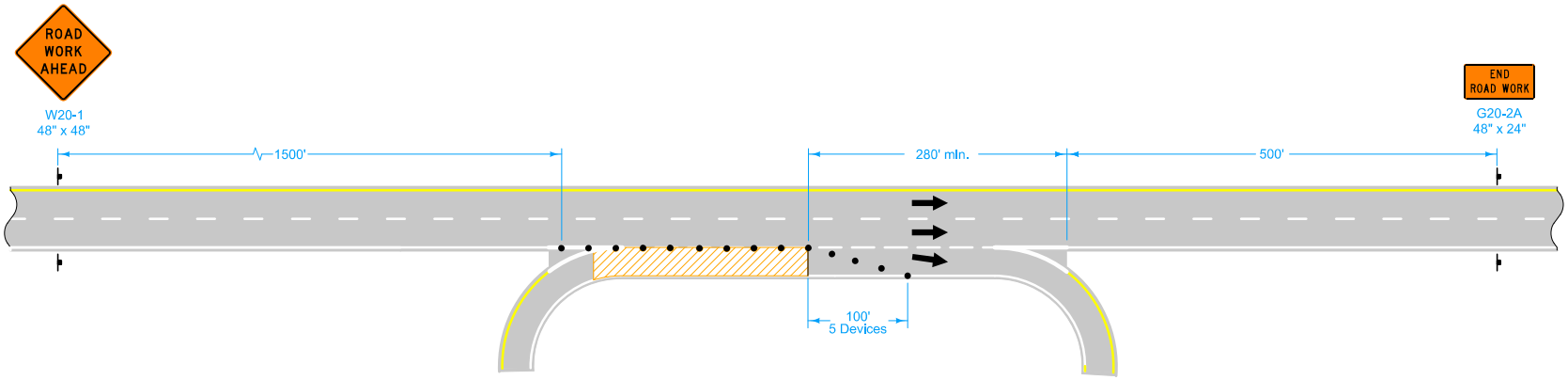

LANE CLOSURE AT EXIT RAMP

LEGEND

- × Drum
- Traffic Sign
- • 42" Channellzer
- Direction of Traffic
- Work Area

Iowa Department of Transportation

STANDARD ROAD PLAN

REVISION	
5	04-17-12

TC-420

SHEET 5 of 5

REVISIONS: Removed "or Vertical Panel" from 42" Channellzer In Legend.

Deanna Maifield
APPROVED BY DESIGN METHODS ENGINEER

LANE CLOSURE AT RAMPS

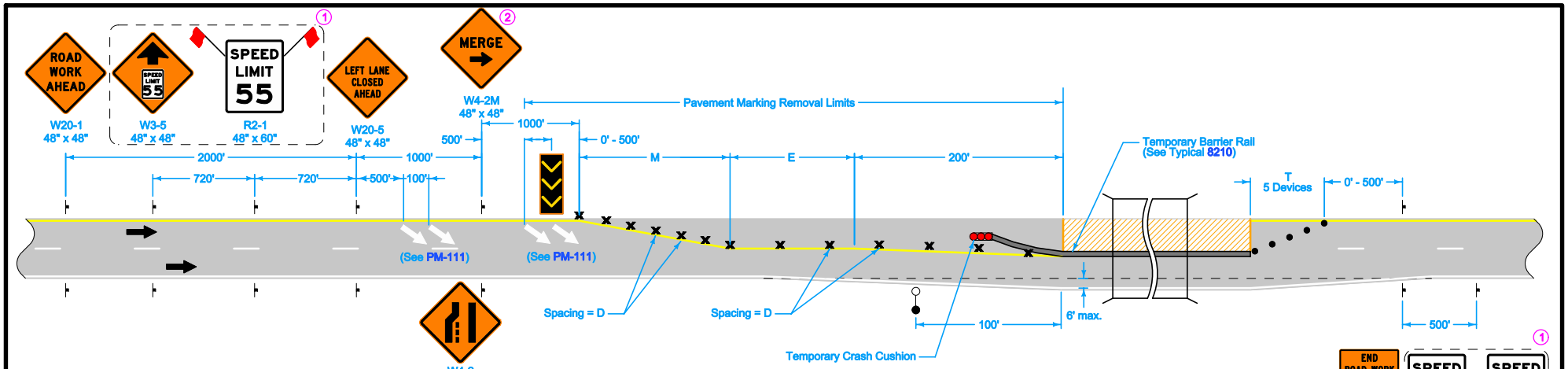

LEFT LANE CLOSURE

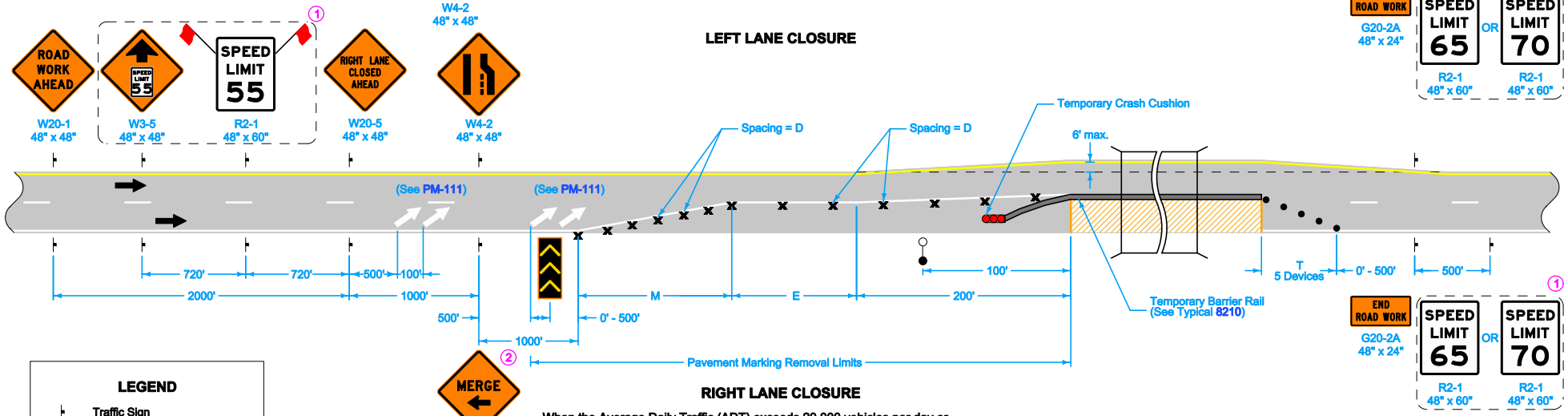

RIGHT LANE CLOSURE

When the Average Daily Traffic (ADT) exceeds 20,000 vehicles per day or when a traffic queue extends beyond the advanced signing, place RIGHT LANE CLOSED 4 MILES and RIGHT LANE CLOSED 2 MILES signs (W20-5) on both sides of the roadway 4 miles and 2 miles in advance of the lane closure, respectively.

(1) For roadways with a posted speed limit of 60 mph or greater before road work:

Place SPEED LIMIT AHEAD sign and SPEED LIMIT 55 sign prior to the lane closure as shown. Place SPEED LIMIT 65 or 70 beyond the work area as shown.

Remove or cover all existing signs that conflict with 55 mph speed limit while 55 mph speed limit is in effect.

(2) Refer to SI-881 for sign details.

LEGEND

- Traffic Sign
- Drum
- 42" Channelizer
- Arrow Panel
- Temporary Floodlighting
- Temporary Crash Cushion
- Work Area
- Direction of Traffic

SPEED LIMIT (mph)	D	E	M	T
45 - 50	45'	300'	630'	100'
55 - 60	55'	400'	770'	100'
65 - 70	65'	500'	910'	100'

Possible Contract Items:
- Painted Symbols and Legends
- Pavement Marking Items
- Pavement Markings Removed
- Symbols and Legends Removed
- Temporary Barrier Rail
- Temporary Crash Cushions
- Temporary Floodlighting

Possible Tabulations:
- 108-22
- 108-27
- 108-29
- 108-30
- 108-33

Iowa Department of Transportation

STANDARD ROAD PLAN

REVISION	
8	04-17-12

TC-421

SHEET 1 of 1

REVISIONS: Removed "or Vertical Panel" from 42" Channelizer in Legend. Added W20-5 signs.

Deanna Maifield
APPROVED BY DESIGN METHODS ENGINEER

LANE CLOSURE WITH TBR

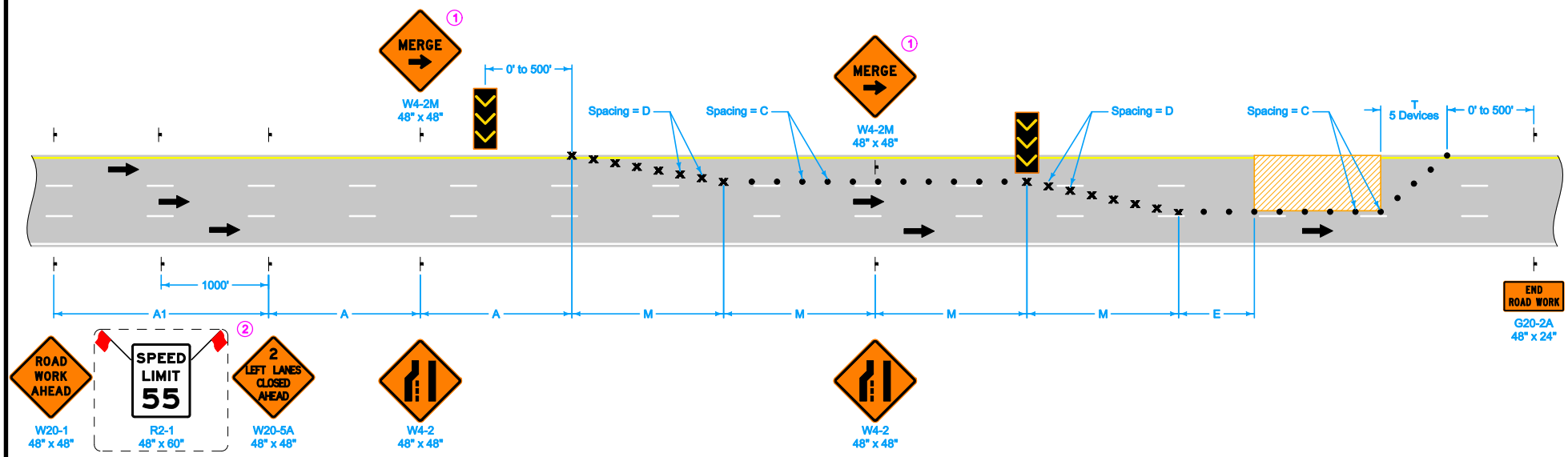

When the Average Daily Traffic (ADT) exceeds 20,000 vehicles per day or when a traffic queue extends beyond the advanced signing, place RIGHT/LEFT LANE CLOSED 4 MILES and RIGHT/LEFT LANE CLOSED 2 MILES signs (W20-5) on both sides of the roadway 4 miles and 2 miles in advance of the lane closure, respectively, as appropriate.

Where there is a lane line drop-off or rise, do not allow traffic to cross over the drop-off or rise; except for ramp locations where a BUMP (W8-1) sign is placed.

Drop-offs greater than a nominal 4 inches are not allowed during non-working hours.

Possible Contract Item:
Traffic Control

LEGEND

- Direction Of Traffic
- Traffic Sign
- Drum
- 42" Channelizer
- Arrow Display
- Work Area

SPEED LIMIT (mph)	A	C	D	E	M	T	A1
35 or less	250'	40'	35'	0'-200'	245'	50'	250'
40	500'	80'	40'	0'-300'	320'	50'	500'
45	700'	80'	45'	0'-400'	630'	100'	700'
50	700'	80'	45'	400'	630'	100'	700'
55 - 60	1000'	100'	55'	600'	770'	100'	2000'
65 - 70	1000'	100'	65'	700'	910'	100'	2000'

(1) Refer to SI-881 for sign details.

(2) For roadways with a posted speed limit of 60 mph or greater before road work:

Place SPEED LIMIT 55 signs prior to the lane closure as shown.

When the length of closure is greater than 1 mile, install SPEED LIMIT 55 signs in the closed lane at 1-mile intervals.

Remove or cover all existing signs that conflict with 55 mph speed limit while 55 mph speed limit is in effect.

Iowa Department of Transportation

STANDARD ROAD PLAN

REVISION	
6	04-17-12

TC-422

SHEET 1 of 1

REVISIONS: Removed "or Vertical Panel" from 42" Channelizer from Legend. Modified circle notes.

Deanna Maifield
APPROVED BY DESIGN METHODS ENGINEER

CLOSURE OF TWO ADJACENT LANES ON DIVIDED HIGHWAY

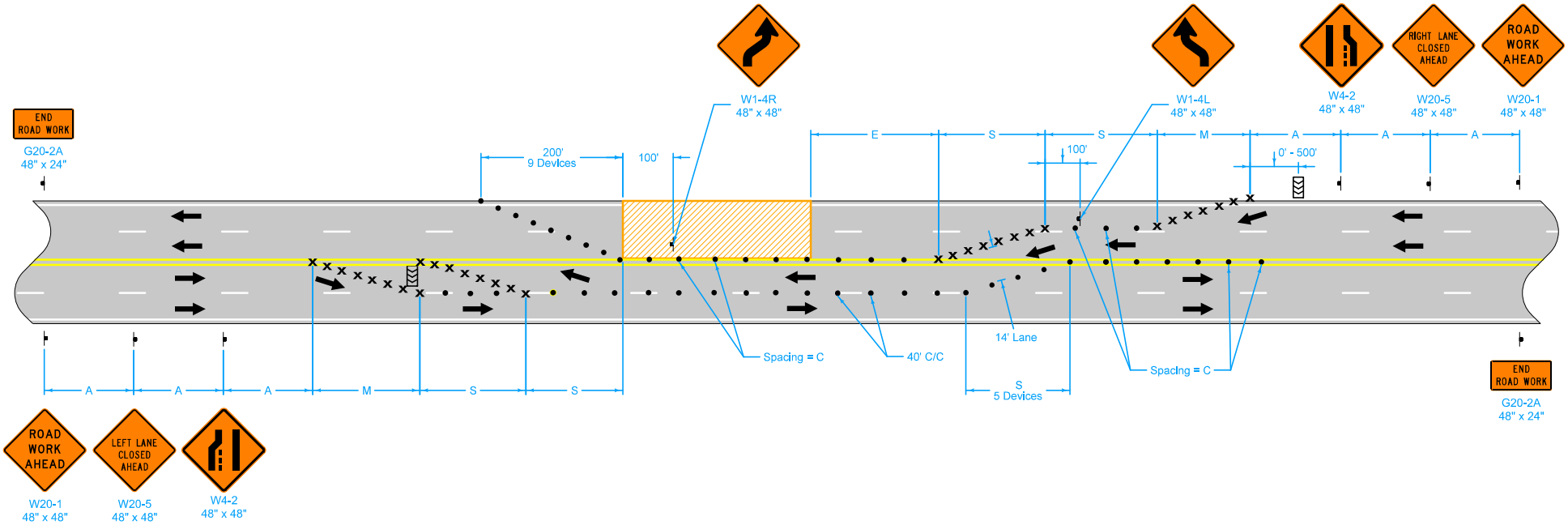

Possible Contract Item:
Traffic Control

LEGEND

- Traffic Sign
- Drum (1)
- 42" Channelizer
- Arrow Panel
- Work Area
- Direction of Traffic

SPEED LIMIT (mph)	A	C	D	E	M	S
35 or less	250'	40'	35'	0'-200'	245'	140'
40	500'	80'	40'	0'-300'	320'	160'
45	700'	80'	45'	0'-400'	630'	315'
50	700'	80'	45'	400'	630'	315'
55 - 60	1000'	100'	55'	600'	770'	385'

When this layout is used during nighttime hours and the width of the traffic lanes is 11 feet or less, use tubular markers to separate two-way two-lane traffic.

(1) Spacing = D for all drums.

Iowa Department of Transportation

STANDARD ROAD PLAN

REVISION	
4	04-17-12

TC-423

SHEET 1 of 1

REVISIONS: Removed "or Vertical Panel" from legend. Moved circle note 1 into specs. Changed "head-to-head" wording to "two-way two-lane" in general note.

Deanna Maifield
APPROVED BY DESIGN METHODS ENGINEER

CLOSURE OF TWO ADJACENT LANES ON UNDIVIDED HIGHWAY

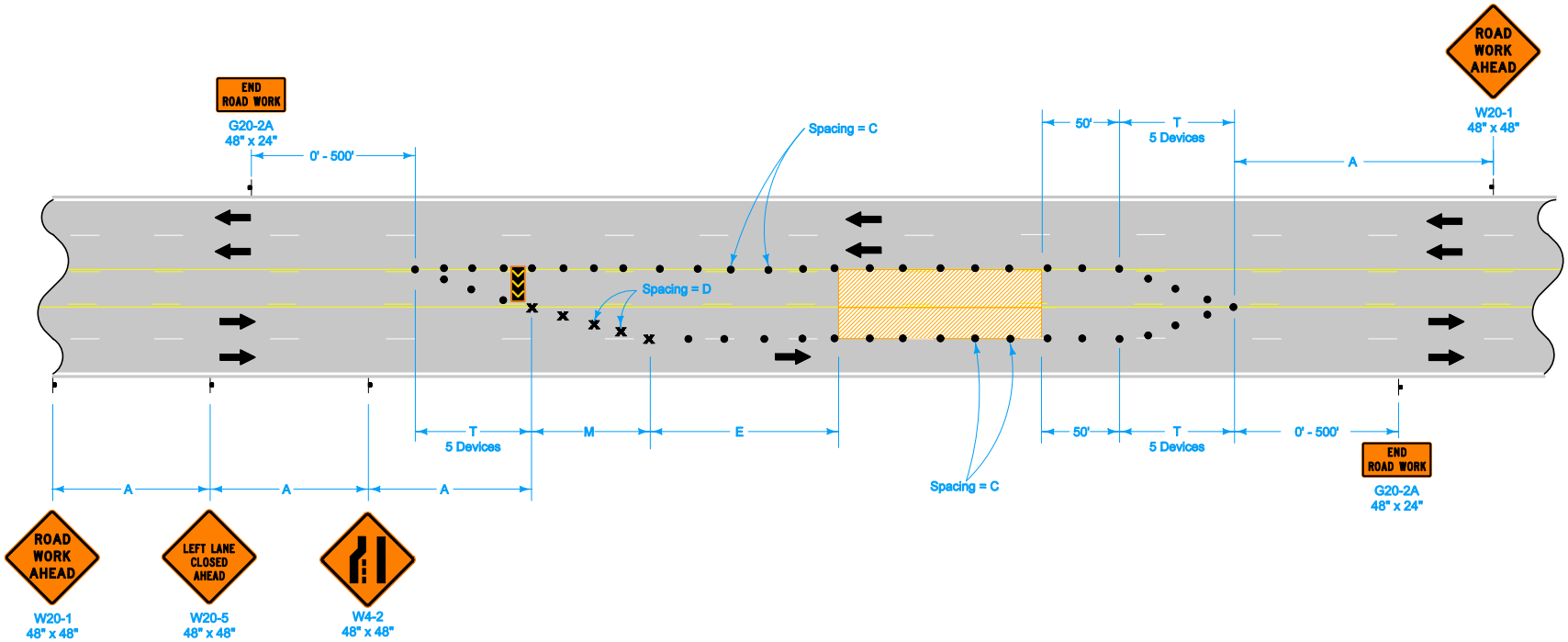

LEGEND

- 42" Channelizer
- Drum
- Traffic Sign
- Work Area
- Direction of Traffic
- Arrow Panel

SPEED LIMIT (mph)	A	C	D	E	M	T
35 or less	250'	40'	35'	0'-200'	245'	50'
40	500'	80'	40'	0'-300'	320'	50'
45	700'	80'	45'	0'-400'	630'	100'
50	700'	80'	45'	400'	630'	100'
55 - 60	1000'	100'	55'	600'	770'	100'

Possible Contract Item:

Traffic Control

Iowa Department of Transportation

STANDARD ROAD PLAN

REVISION	
4	04-17-12

TC-429

SHEET 1 of 1

REVISIONS: Removed "or Vertical Panel" from 42" Channelizer in Legend. Removed circle note 1.

Deanna Maifield

APPROVED BY DESIGN METHODS ENGINEER

CLOSURE OF CONTINUOUS TWO-WAY LEFT-TURN LANE AND ADJACENT LANE

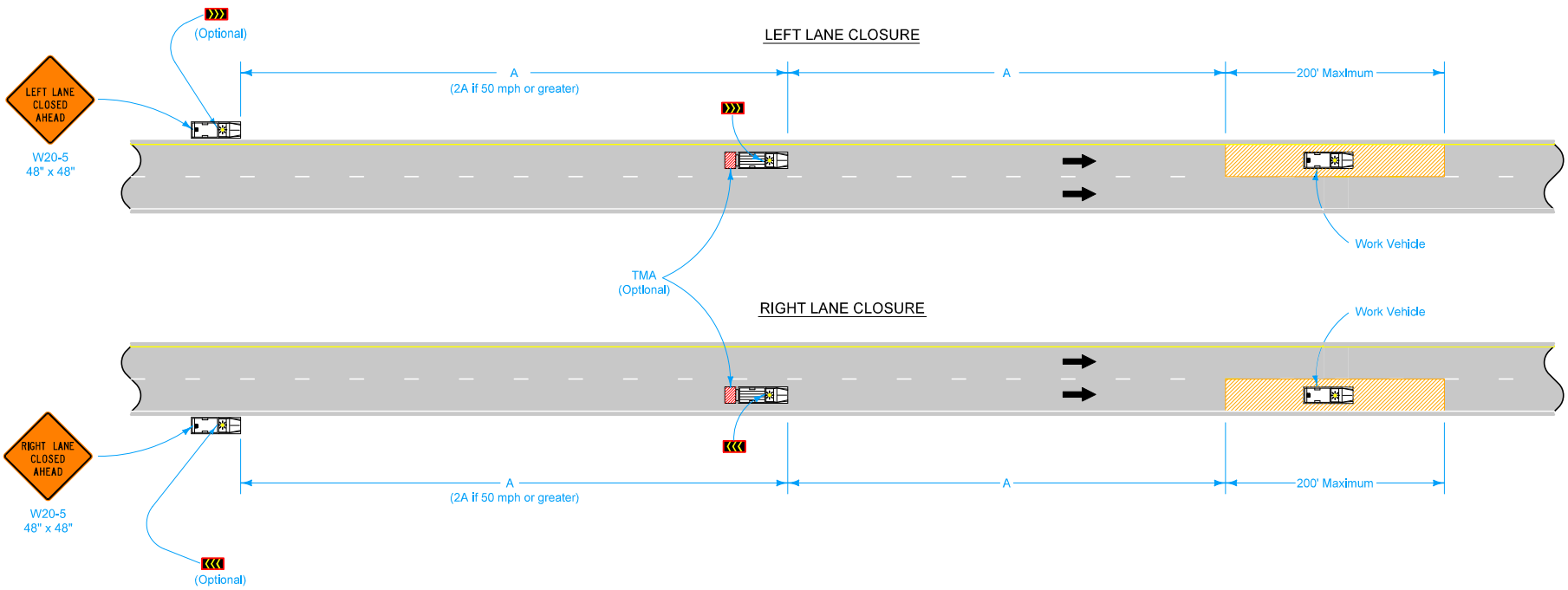

LEGEND

- Traffic Sign
- Work Area
- Arrow Panel
- Direction of Traffic
- Truck-Mounted Attenuator (TMA)

SPEED LIMIT (mph)	A
35 or less	300'
40 - 45	500'
50 - 55	500'
60 or greater	1000'

All vehicles shall be equipped with an amber revolving light or an amber strobe light.

This layout is intended for use with slow-moving operations involving stops not to exceed 30 minutes. For stops exceeding 30 minutes, use TC-418 or TC-419.

Possibe Contract Item:

Traffic Control

Iowa Department of Transportation

STANDARD ROAD PLAN

REVISION	
3	04-17-12

TC-431

SHEET 1 of 1

REVISIONS: No significant changes. Changed to color.

Deanna Maifield
APPROVED BY DESIGN METHODS ENGINEER

SLOW MOVING VEHICLE OPERATING IN THE TRAFFIC LANE

LEFT LANE CLOSURE

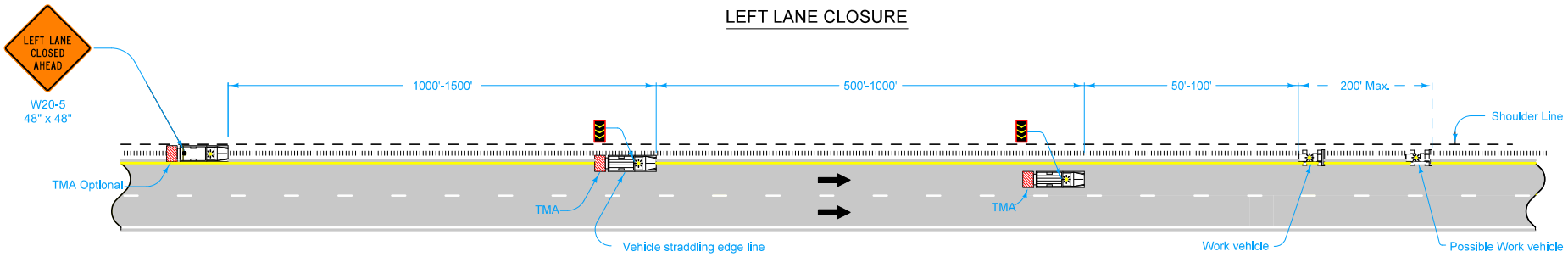

RIGHT LANE CLOSURE

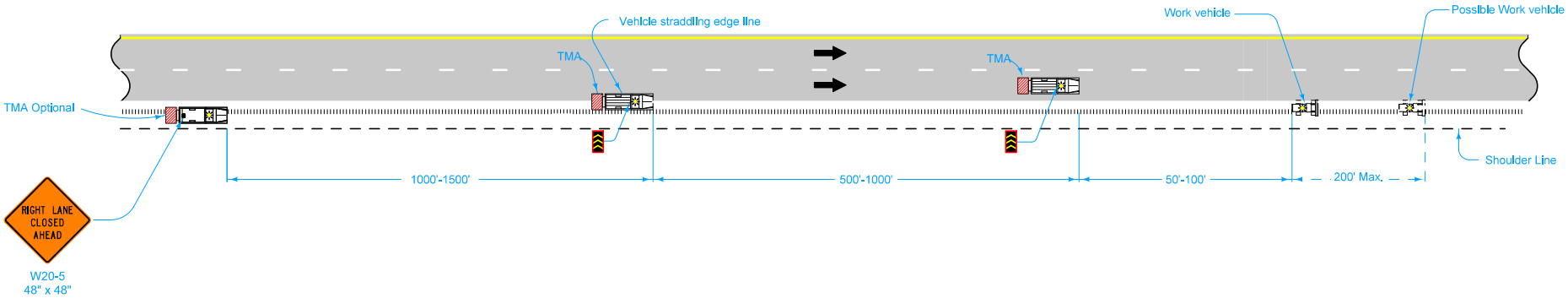

Possible Contract Item:

Traffic Control

All vehicles shall be equipped with an amber revolving light or an amber strobe light.

When fog sealing the milled rumble strips, place a 48" X 48" FRESH OIL sign (W21-2) at the beginning of the work area. Place additional FRESH OIL signs after each intersection and periodically through the work area so that signs are no more than 2 miles apart.

Operators should adjust their spacing, as necessary, to keep adjacent vehicles within view.

LEGEND

- Traffic Sign
- Arrow Panel
- Truck Mounted Attenuator (TMA)
- Direction of Traffic

Iowa Department of Transportation

STANDARD ROAD PLAN

REVISION	
1	04-17-12

TC-432

SHEET 1 of 1

REVISIONS: No significant changes. Changed to color.

Deanna Maifield

APPROVED BY DESIGN METHODS ENGINEER

SHOULDER RUMBLE STRIP OPERATIONS

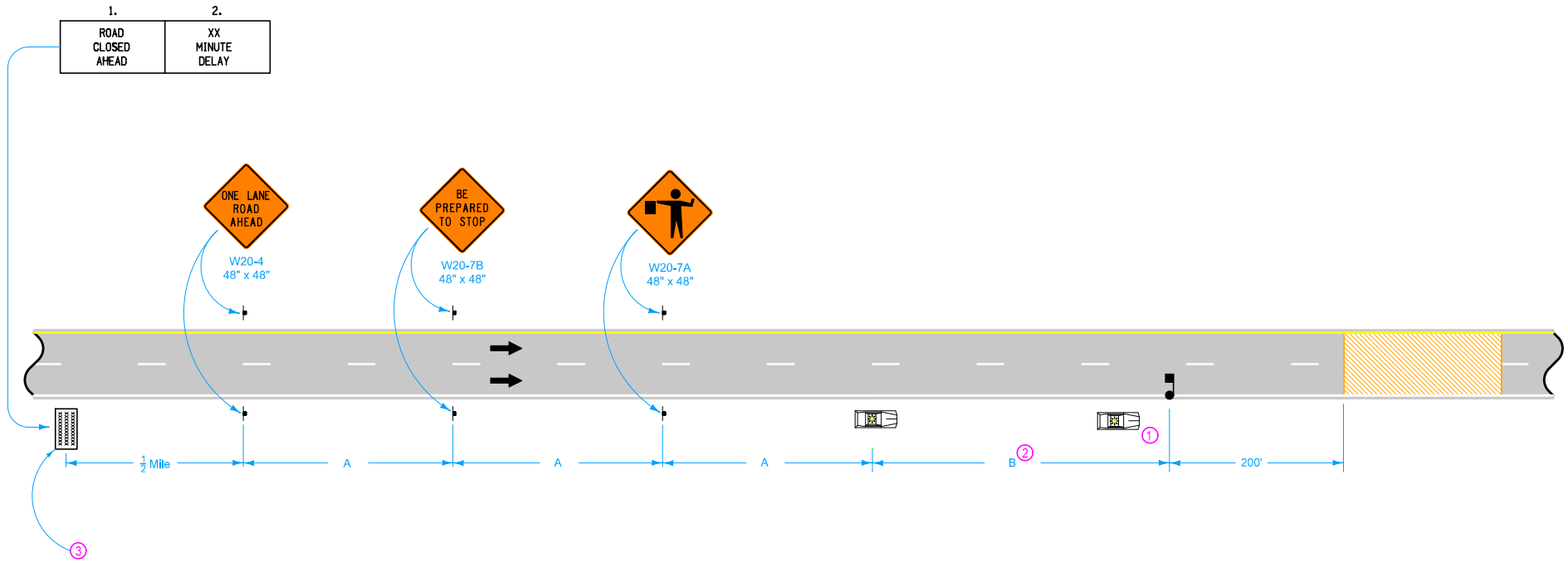

Possible Contract Items:

Traffic Control
Flaggers
Changeable Message Signs

LEGEND

- Traffic Sign
- Law Enforcement Vehicle
- Flagger
- Changeable Message Sign
- Work Area
- Direction of Traffic

SPEED LIMIT (mph)	A	B
35 or less	250'	250'
40 - 45	350'	350'
50 or greater	1000'	2500'

1. A vehicle with an amber revolving light or amber strobe light may substitute leading law enforcement vehicle.
2. This distance may be increased to provide adequate storage for stopped vehicles.
3. Optional for speed limits less than 55 mph.

Iowa Department of Transportation

STANDARD ROAD PLAN

REVISION 3 04-17-12

TC-451

SHEET 1 of 1

REVISIONS: No significant changes. Changed to color.

Deanna Maifield
APPROVED BY DESIGN METHODS ENGINEER

TEMPORARY ROAD CLOSURE ON DIVIDED HIGHWAY

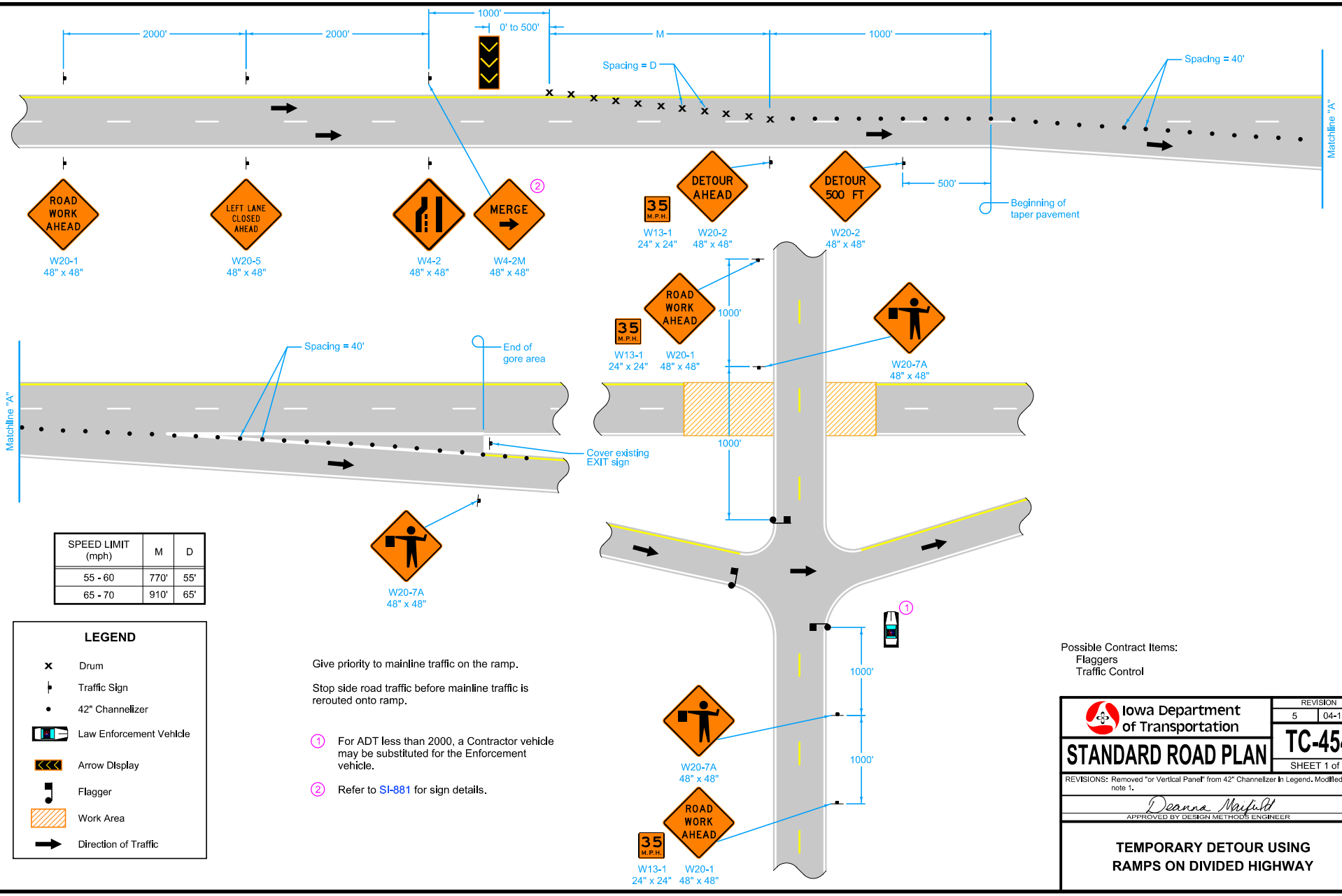

SPEED LIMIT (mph)	M	D
55 - 60	770'	55'
65 - 70	910'	65'

LEGEND

- × Drum
- Traffic Sign
- • 42" Channelizer
- Law Enforcement Vehicle
- Arrow Display
- Flagger
- Work Area
- Direction of Traffic

Give priority to mainline traffic on the ramp.

Stop side road traffic before mainline traffic is rerouted onto ramp.

(1) For ADT less than 2000, a Contractor vehicle may be substituted for the Enforcement vehicle.

(2) Refer to SI-881 for sign details.

Possible Contract Items:
Flaggers
Traffic Control

Iowa Department of Transportation

STANDARD ROAD PLAN

REVISION 5 04-17-12

TC-454

SHEET 1 of 1

REVISIONS: Removed "or Vertical Panel" from 42" Channelizer in Legend. Modified circle note 1.

Deanna Maifield
APPROVED BY DESIGN METHODS ENGINEER

TEMPORARY DETOUR USING RAMPS ON DIVIDED HIGHWAY