I-95 Corridor Crash Data Reporting Methods

Final Report

prepared for

I-95 Corridor Coalition

prepared by

Cambridge Systematics, Inc.
100 Cambridge Park Drive, Suite 400
Cambridge, Massachusetts 02140

date

June, 2010

I-95 Corridor Crash Data Reporting Methods

Final Report

prepared for

I-95 Corridor Coalition
Project 2-2-16-7C

prepared by

Cambridge Systematics, Inc.
100 Cambridge Park Drive, Suite 400
Cambridge, Massachusetts 02140

date

June, 2010

Table of Contents

Executive Summary **1**

1.0 Introduction **5**

- 1.1 Objective 5
- 1.2 Approach 5
- 1.3 Data Quality Measures 6
- 1.4 Report Overview 7

2.0 Current State of the Practice **8**

- 2.1 Crash Database Coordination 8
- 2.2 Legislation and Policies 9
- 2.3 Crash Report Forms 10
- 2.4 Crash Data Collection and Reporting Process 10
- 2.5 Crash Data Collection and Reporting Training 16

3.0 Impact of Technology on Crash Data Collection & Reporting **17**

- 3.1 Crash Data Collection Performance Measures 18
  - Performance 18
  - Roadway Clearance 20
- 3.2 Crash Data Reporting Performance Measures 20
  - Performance 21
- 3.3 Advantages of Electronic Crash Data Systems 22
- 3.4 Challenges to Implementing Electronic Crash Data Systems 23
- 3.5 System Costs 24

4.0 Crash Data Systems and Processes Best Practices **25**

- 4.1 I-95 Coalition States' Crash Data Collection and Reporting Processes Best Practices 25
- 4.2 National Best Practices in Crash Data Systems 29

5.0 Funding for Crash Data System Improvements 33
- 5.1 Funding Sources Commonly Used for Crash Data System Improvements 33
- 5.2 Additional Funding Sources for Crash Data System Improvements 35

6.0 Recommended Practices for Crash Data System Improvements 37
- 6.1 Recommendations for Addressing Common Challenges 37
  - Front-End Considerations 37
  - Crash Report Filing Requirements 38
  - Data Sharing 39
  - System Compatibility 39
  - Inflexible Systems 40
  - Agency Coordination and Cooperation 40
  - Resources and Funding 41
- 6.2 Data Quality Improvements 41
  - Data Collection at Crash Scene 43
  - Electronic Submission & Quality Assurance/Quality Control 43
  - Integration and Accessibility 43
  - Training 44

A. State Contact Information 45

B. State Planning Documents 49

C. Crash Reporting Requirements and Data Sharing Agreements 59

D. Model Minimum Uniform Crash Criteria 63

E. Training 66

F. Crash Data Collection and Reporting Technology 68

G. System Costs 76

List of Tables

2.1 Crash Data System Process 13
3.1 Crash Data Collection Performance Measures 19
3.2 Crash Data Reporting Performance Measures 21
4.1 I-95 Coalition States Best Practices and Efficiencies by Impacted Data Quality Measure 26
4.2 National Best Practices and Efficiencies by Impacted Data Quality Measure 30
6.1 Technologies & Strategies for Data Quality Improvements by Impacted Data Quality Measure . 42
A.1 Stakeholder Contact Information 45
A.2 State Highway Safety Office Contact Information 47
B.1 Traffic Records Strategic Plan: Crash System Objectives 49
B.2 Strategic Highway Safety Plan: Data Related Strategies 55
C.1 State Minimum Reporting Thresholds and Reporting Requirements 59
C.2 Data Sharing Agreements 62
E.1 Crash Data Collection and Reporting Training 66
F.1 Technology Used to Collect Crash Data 68
F.2 Technology Used for Crash Data Reporting 72
G.1 Projected Costs for Planned Crash Data Improvement Projects 77

List of Figures

2.1 Crash Data System Flow Chart – Massachusetts Current System 11
2.2 Crash Data System Flow Chart – Massachusetts Proposed Future System..... 12
3.1 Crash Data Collection Systems Used by Coalition States 17

Executive Summary

Access to timely and accurate crash data is essential to improving safety and efficiency on the I-95 Corridor's transportation network. Crash data are used throughout the corridor by law enforcement, departments of transportation, licensing agencies and other entities to make decisions on project planning and prioritization, implementation of technology and safety programs, resource allocation, and other activities. The purpose of this project was to:

- Study the current state of the practice regarding crash data collection and reporting in I-95 Coalition States;
- Identify the benefits and downsides of the current electronic crash data systems and procedures; and
- Identify best practices for timely and accurate data collection and reporting.

There was also a desire to understand if electronic crash collection could impact incident clearance times. The rationale underlying the study is that consistencies in electronic collection and reporting systems among the Coalition States could ultimately lead to a coordinated effort to develop an improved reporting methodology among the states which would benefit the safety and efficiency of this vast transportation network.

To identify the current crash data collection and reporting practices in the I-95 Coalition States, information collected included lead agencies responsible for maintaining the state's crash database, crash data system, and crash report form; crash data related performance measures; legislation, regulations, policies and procedures impacting crash report collection, submission, and accessibility; system implementation requirements including costs, training, multi-agency/multi-disciplinary reporting requirements and procedures; and other pertinent information.

State planning documents were obtained through the state highway safety offices (SHSOs), Traffic Records Coordinating Committees (TRCCs), and various on-line resources. In addition, state agency representatives completed surveys or were interviewed by the project team to gain additional information about each state's systems. Next, key elements of the states' crash data systems and related processes were compared to determine the impact of technology on crash data collection and reporting, including both the benefits and challenges to utilizing the latest technology. To guide the comparison of the crash data systems the six data quality measures established by the National Highway Traffic Safety Administration (NHTSA) were used; they include timeliness, accuracy, completeness, uniformity, integration, and accessibility.

Best practices and efficiencies in the Coalition States' crash data collection and reporting processes were identified through interviews with crash data collection managers and law enforcement agencies; and a review of the state Traffic Records Strategic Plans and NHTSA Section 408 State Traffic Safety Information System Improvement Grants applications. To augment the identification of best practices, states outside of the I-95 Corridor were studied to identify additional strategies that have been successful in improving the crash data collection and reporting process. A review of the NHTSA State Data Improvement Projects Clearinghouse and the Association of Transportation Safety Information Professionals (ATSIP) Best Practices Challenge winning projects was combined with surveys completed by ATSIP Executive Board members to gain insight on the most promising best practices which use technology to improve traffic records systems.

Funding

Potential funding sources, including Federal programs and other funding sources available to implement data improvements, were also researched, and are provided. Several of these resources are outside of the "typical" funding sources states presently use to fund traffic records improvement projects.

State, regional, and local agencies (e.g., law enforcement) interested in securing funding or assistance for traffic records system improvements, including equipment and training, should contact their state highway safety office (SHSO); contact information is provided in Appendix A, Table A.2. Much of the Federal funding specifically aimed at traffic records improvements flows through the SHSOs, which are required to administer a Traffic Records Coordinating Committee (TRCC). This statewide stakeholder committee facilitates the planning, coordination and implementation of projects to improve a state's traffic records system and oversees the Traffic Records Strategic Plan which details the state's most critical traffic records data issues. The TRCC is aware of other funding sources which are not administered by the SHSO to fund crash data system improvements. Typically all levels of law enforcement are represented by their respective state organization on the TRCC.

Recommendations

The Final Report concludes with recommendations for improving crash data systems, most of which focus on electronic crash data systems and procedures. These recommendations were gleaned from the best practices and efficiencies identified in this report and from information provided by the many practitioners who provided input to the project team through surveys and interviews. A condensed list of recommendations for state and local agencies follows; the recommendations are addressed in more detail in Chapter 6.0.

State Recommendations

- Obtain and incorporate feedback from law enforcement during the development of an electronic traffic records system to minimize deployment issues and provide technology that is easy to use in the field.
- Collaborate and coordinate with law enforcement agencies to develop a consistent standard for data collection in the state.
- Provide funding assistance to agencies to reduce the burden of implementing an electronic crash data collection and reporting system.
- Provide assistance to law enforcement agencies by providing configuration assistance, regular upgrades, help desk assistance, and training to promote use of the electronic system.
- Proactively promote the use of the electronic crash data system to law enforcement agencies throughout the state by sharing the financial benefits associated with reduced staff time and mailing costs, and the benefits of quicker access to improved data for decision making.
- Hire law enforcement liaisons (LELs) dedicated to encouraging the use of electronic crash data systems and the need for data standards to law enforcement agencies, and assisting agencies with improving their crash reporting.
- Provide training to law enforcement officers on the many stakeholders who use the crash data, how it is used, and the importance of capturing accurate crash location data (e.g., data are used for identifying high crash locations and countermeasure strategies).
- Develop data sharing procedures and agreements with various stakeholders to manage the risk of liability issues.
- Develop crash data standards for law enforcement agencies to adhere to when creating crash reporting modules within their records management system (RMS) to alleviate issues associated with system compatibility and provide uniform reporting standards.
- Work with vendors and law enforcement agencies to provide the capability to submit crash data electronically to the state database.
- Consider potential future upgrades when evaluating potential systems and search for systems that provide flexibility for future upgrades.

Local Recommendations

- Actively participate in the State's Traffic Records Coordinating Committee (TRCC) to encourage collaboration among agencies responsible for traffic crash records systems or work though the agency's respective state organization to provide input to the TRCC and to obtain funding and training information and support.
- Institute an administrative policy to require officers to report crash locations at the scene.
- Provide adequate training on using GPS equipment for officers in the field.
- Work with vendors and the state agency to provide the capability to submit crash data electronically to the state database.
- Consider potential future upgrades when evaluating potential systems and search for systems that provide flexibility for future upgrades.

1.0 Introduction

Crash data are essential to improving safety and efficiency on the I-95 Corridor's transportation network. Crash data can be analyzed to identify safety hot spots along the corridor and factors contributing to crashes. The results can be used to identify areas in need of specific safety applications, technologies, programs, practices, and enforcement. The timely transmission of crash data is critical for identifying areas and situations prone to incidents and their causes. Frequently, however, this data is not accessible in a timely manner to law enforcement, Departments of Transportation (DOTs), and other entities which rely on crash data to make critical management and operational decisions. Often there is a significant lag time in the available data, and the crash reports are frequently inaccurate or incomplete.

1.1 Objective

The objective of this project was to identify the current state of practice and best practices in I-95 Corridor Coalition States' crash data collection and reporting systems to improve the timeliness, accuracy, and accessibility of crash data among the Coalition States. This report provides the Coalition States with a comprehensive reference tool which identifies:

- Current state of the practice with respect to crash data collection and reporting in I-95 Coalition States, including the process and procedures, methodologies, policies and legislation; lead agencies responsible for such data collection; implementation requirements including costs, training, multi-agency/multi-disciplinary reporting requirements and procedures; and other such pertinent information;
- Benefits and challenges related to the electronic crash data reporting systems and procedures currently in place; and
- Recommendations as to best practices for crash data reporting including methods for timely and accurate data collection, transmission, and dissemination.

1.2 Approach

To meet the objectives of this study, information was gathered from a number of sources, including: a review of state planning documents (e.g., Traffic Records Strategic Plans and Section 408 grant applications); telephone interviews conducted with representatives from the agencies responsible for the crash data collection and reporting system; and surveys completed by

state agencies (e.g., DOTs and state law enforcement agencies) and members of the Association of Transportation Safety Information Professionals (ATSIP). This information was supplemented by a scan of existing literature on crash data systems in Corridor States and at the national level.

1.3 Data Quality Measures

While the data collection systems and practices vary among the Coalition States, there are common measures which can be used to evaluate data quality. The National Highway Traffic Safety Administration (NHTSA) has established the following six data quality measures, commonly referenced as the "six pack":

Timeliness	•A measure of how quickly an event is available within a data system
Accuracy	•A measure of how reliable the data are, and if the data correctly represent an occurrence
Completeness	•A measure of missing information, including missing variables on the individual crash forms, as well as underreporting of crashes
Uniformity	•A measure of how consistent information is coded in the data system, and/or how well it meets accepted data standards
Data Integration	•A measure of how well various data systems (e.g., roadway inventory, driver licensing, EMS, etc.) are connected or linked
Accessibility	•A measure of how easy it is to retrieve and manipulate data in a system, in particular by those entities that are not the data system owner

This Final Report compares key elements of the states' crash data systems and related processes to identify best practices and efficiencies to help Coalition States improve the timeliness, accuracy, and accessibility of state crash data collection and reporting.

1.4 Report Overview

This Final Report serves as the final deliverable for Project 2-2-16-7C, *Study Crash Data Reporting Methods*, and summarizes the findings of the research conducted on the I-95 Coalition States' crash data collection and reporting systems and procedures. The report provides a compilation of the following:

- Current state of the practice – overview of the current state of the practice in crash data collection and reporting among the Coalition including crash data system coordination, policies and procedures, crash report forms, processes, and training.
- Crash data collection and reporting technology – identification of technologies currently being utilized by the Coalition States in the crash data collection and reporting processes, as well as an evaluation of the impacts of technology on crash data collection and reporting and roadway clearance times.
- Best practices in crash data systems and processes – identification of notable or best practices implemented in the Coalition States to improve the timeliness, accuracy, completeness, uniformity, integration, and accessibility of their crash data collection and reporting systems. National best practices in crash data collection and reporting systems also are identified.
- Funding for crash data system improvements – list of funding sources currently used by states for record system improvements, as well as additional funding sources for crash data system improvements not commonly used by states.
- Recommended practices for implementing crash data system improvements – recommendations for implementing crash data system improvements, organized around typical challenges encountered which includes factors to consider prior to selecting improvements.

The remaining chapters of this report summarize our findings and recommendations.

2.0 Current State of the Practice

Management of crash data systems requires coordination and cooperation among various stakeholders. Crash data systems are typically maintained by one organization, but often rely on data and input from a variety of agencies within the state. State legislation and organization policies shape the way traffic records systems are administered and implemented, and can greatly impact the effectiveness and efficiency of these systems. State crash reporting requirements and procedures, along with penalties for non-reporting, often dictate the timeliness and completeness of crash data submitted.

This chapter provides an overview of the current state of the practice in crash data collection and reporting among the Coalition States including crash data system coordination, policies and procedure, crash report forms, processes, and training.

2.1 Crash Database Coordination

While crash data systems are typically managed by one agency, there is ongoing coordination and cooperation among various stakeholders. Key stakeholders include lead agencies responsible for maintaining state crash databases and the crash data system, crash report form, and Traffic Records Coordinating Committee (TRCC) member agencies and organizations. Appendix A provides contact information for these key crash data system stakeholders.

Key Stakeholders Include:

- Crash Database Managers
- Crash Data System Managers
- Crash Report Form Managers
- Traffic Records Coordinating Committees (TRCC)

It is beneficial for the lead agency maintaining the crash data system to coordinate with agencies managing other state databases, such as vehicle registration, driver license, and Emergency Medical Services (EMS) to provide linkage between the databases. Coordination and collaboration can be accomplished through participation in the state's TRCC. TRCCs are statewide stakeholder committees created to facilitate the planning, coordination and implementation of projects to improve a state's traffic records system. The TRCC is a partnership of state and local interests from the transportation, law enforcement, criminal justice, and health professions. The TRCC fosters understanding among stakeholders and provides an appropriate venue to formulate mutually beneficial projects for improving the accessibility, timeliness, accuracy, completeness, uniformity, and integration of statewide traffic-related information.

Various state planning documents identify goals, objectives, strategies, and performance measures for improving traffic records systems. These documents are developed with input from numerous safety stakeholders and should be coordinated with consistent goals and objectives for crash data system improvements. The individual strategies or projects are the means for meeting the goals and objectives, and the performance measures are used to evaluate the effectiveness of the project in terms of meeting the objective. For example, if the objective is to improve the timeliness of crash data entry into the crash database through implementation of an electronic system, the number of days from the date of the crash to the entry date into the crash database would be an appropriate performance measure.

State planning documents for Coalition States were obtained and reviewed to identify the status of the states' traffic records system and activities planned to improve the states' crash data systems. The state planning documents included Strategic Highway Safety Plans (SHSPs), Highway Safety Performance Plans (HSPPs), Traffic Records Strategic Plans, the most recent Section 408 grant application, and most current Traffic Records Assessment report. Appendix B provides a summary of the Coalition States' traffic records improvement strategies included in these plans.

2.2 Legislation and Policies

The effectiveness and efficiency of a traffic records system can be significantly impacted by state legislation and organization policies. These policies shape the way traffic records systems are administered and implemented. State reporting requirements and procedures, along with penalties for non-reporting, often dictate the timeliness and completeness of crash data submitted. Crash data collection and reporting requirements and data sharing agreements for I-95 Coalition States have been compiled and assessed. Law enforcement agencies in Coalition States are typically required to report if a fatality, injury, or property damage exceeding a determined dollar amount occurs. Crash reporting requirements and minimum reporting thresholds are provided in Appendix C.

...policies shape the way traffic records systems are implemented and administered.

State legislation and organization policy can also impact the accessibility of crash data to various stakeholders. Many states have developed data sharing agreements that help foster data sharing and collaboration among various stakeholders. Table C.2 in Appendix C identifies existing agreements in the Coalition States.

2.3 Crash Report Forms

Crash report forms are the primary means through which crash data are collected and subsequently entered into state crash data systems. Unfortunately, there is a lack of uniformity among state crash forms, and in some states not all law enforcement agencies use the same crash form. The crash report forms may contain different data elements or definitions. This lack of uniformity makes it difficult to accurately compare and analyze crash data from differing states which may lead to misleading results. State crash forms can be obtained from the NHTSA website (http://www.nhtsa-tsis.net/crashforms/Pages/state_map.htm).

Many states are incorporating the Model Minimum Uniform Crash Criteria (MMUCC) into their data collection efforts. MMUCC represents a voluntary and collaborative effort to generate uniform crash data that are accurate, reliable, and credible for data-driven highway safety decisions within a state, between states, and at the national level. Implementation of MMUCC elements will enable accurate data sharing and analysis at all levels and lead to implementation of effective highway safety programs. Additional information on MMUCC data elements is provided in Appendix D.

2.4 Crash Data Collection and Reporting Process

Each Coalition State utilizes a unique process for crash data collection and reporting. These processes are tailored to fit the current crash collection and reporting technologies used by a state and are modified when new technology is incorporated into the system. These modifications include implementation of electronic data transfer, digital scanning of crash reports and crash diagrams, or development of various data analysis tools for end users. One of the easiest ways to comprehend a state's crash data system process is to display it visually through a flow chart. Figure 2.1 illustrates an example of a crash data system process utilized by one Coalition State, Massachusetts, which currently relies primarily on paper-based crash data collection.

Each Corridor state utilizes a unique process for crash data collection and reporting.

As shown in Figure 2.1, the Massachusetts crash data component is created from a mix of two primary data sources: the Motor Vehicle Crash Police Report and the Motor Vehicle Crash Operator Report. The two sources of crash data are collected from law enforcement officers and drivers, respectively, with preference given to police reports of crashes for creation of the official crash record. Operator reports, submitted by involved drivers, are entered into the official record if the officer report is missing or lacks complete data. Both the police and operator reports are capable of documenting the time, location, environment, and characteristics of individual crashes. Crash reports are received annually by the Massachusetts Registry of Motor Vehicles

(RMV) and entered into the Crash Data System (CDS). Data are added to the CDS through receipt of both paper and electronic crash reports. Paper reports require manual data entry by RMV clerks while electronic crash reports are received electronically through a file transfer protocol portal set up by the RMV with individual law enforcement agencies operating one of the currently supported Records Management Systems (RMSs). The current process is labor-intensive and includes manual entry (and subsequent re-entry) of crash data at a number of points throughout the process.

Figure 2.1 Crash Data System Flow Chart – Massachusetts Current System

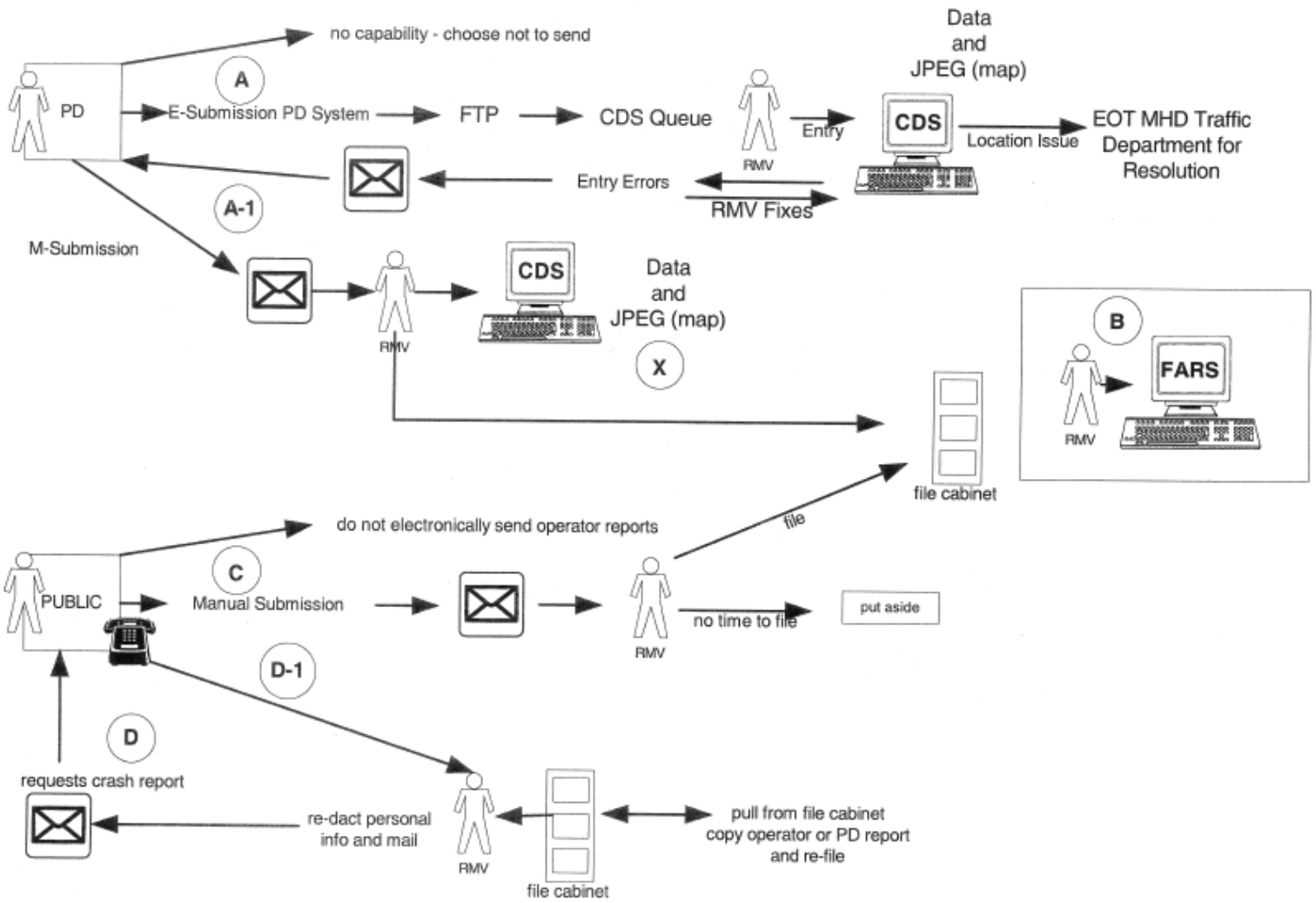

Figure 2.2 diagrams a proposed future crash system for Massachusetts, which aims to improve the efficiency of the process and accessibility of the crash data for end users. As shown in Figure 2.2, the future crash data system flow chart incorporates more advanced technology into the process, including scanning of the crash reports and crash diagrams; enhanced electronic crash data submission from local law enforcement agencies to the state crash data manager; and a web-based system for crash data retrieval and analysis by partner agencies.

Figure 2.2 Crash Data System Flow Chart – Massachusetts Proposed Future System

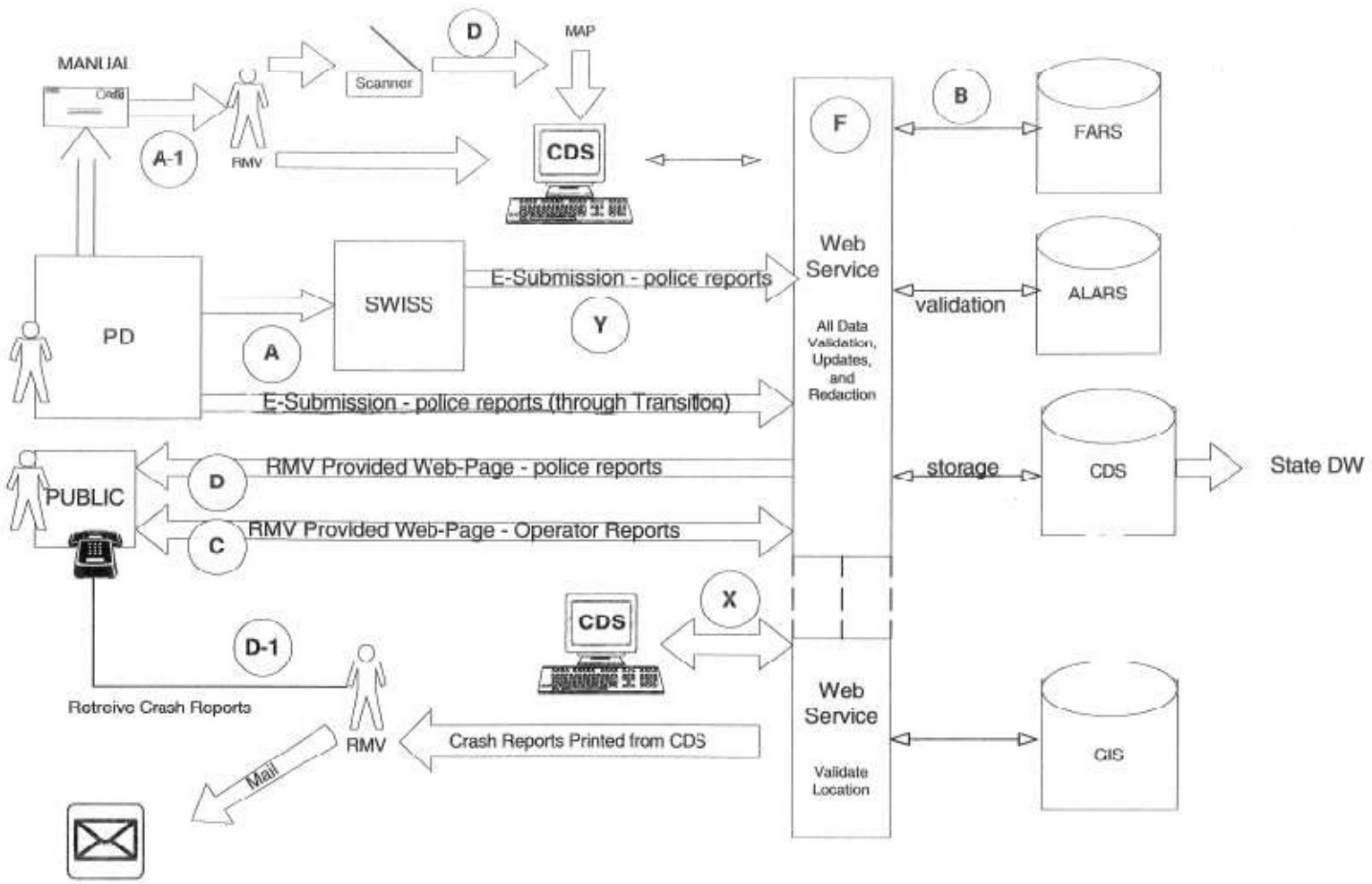

Each state's process may vary from Massachusetts' existing and proposed processes, but these examples provide a general understanding of the steps involved in the crash data collection process. A description of each states process is provided in Table 2.1. As the future process in Figure 2.2 illustrates, technology can simplify the collection process.

Table 2.1 Crash Data System Process

State	Process
Connecticut	A copy of the Connecticut Uniform Vehicle Accident Report (PR-1) is required to be forwarded to the Connecticut Department of Transportation (ConnDOT) within five days after the investigation is completed for all reportable crashes. Approximately 115,000 crashes are reported each year by state and local law enforcement. ConnDOT maintains an Accident History File (AHF), which is a system for storing coded crash information for later retrieval and analysis. Although some agencies in the state have electronic crash reporting systems, all crash reports are received by ConnDOT as paper copies of the PR-1. Crashes involving fatalities are intercepted and processed separately by the FARS staff. Generally speaking, the AHF has a relatively limited mission: to meet the internal needs of ConnDOT. Consequently there is no statewide crash repository that is designed to meet the needs of all who require crash information. ConnDOT does respond to external requests for crash information, but the data are too limited to serve the various and numerous traffic safety stakeholders. Many crash data users obtain crash information from sources other than ConnDOT, including the Department of Public Health as well as the various local police agencies that maintain their own data. ConnDOT produces an extensive suite of standard reports on a regular basis, including the Connecticut Accident Summary Tables (CAST), Traffic Accident Surveillance Report (TASR) and Suggested List of Surveillance Study Sites (SLOSSS). They also provide raw crash data in various forms. However, there is no standard crash data query and analysis tool that is available to data users from the various constituencies.
Delaware	All drivers involved in a crash are required to report the crash to the jurisdictionally responsible agency. The enforcement agency responding must complete a crash report for all reportable crashes exceeding the minimum reporting threshold and submit to the Delaware State Police (DSP) Traffic Unit within ten days for entry in the crash system. Many agencies in the state complete crash reports even though they do not meet the reporting threshold. Delaware upgraded their crash records from a paper-based system to an electronic data capture system through the use of the Traffic and Criminal Software product (TraCS). As of January 1, 2007, all DSP and local enforcement officers are submitting reports via TraCS. Data required for historical statistical analysis requires retrieval of data from both the existing paper-based file and the TraCS based file. A locator tool based on the Delaware Department of Transportation's (DelDOT) centerline file was developed to enable the reporting officer to open a map of the state in TraCS and drill down to crash location. Presently there is no active linkage between the paper-based crash files and the electronic TraCS crash files. There is a linkage between TraCS and roadway files, but not with other records systems such as motor vehicle data, driver history, or emergency medical services. Additionally, TraCS does not have a mapping component in the locator tool to allow a visual display that could be used to determine where selective enforcement and safety programs could be applied; however, a future project will address this deficiency.

State	Process
Florida	The State of Florida processes more than 250,000 crash reports annually. These reports are submitted by more than 350 law enforcement agencies to the Florida Department of Highway Safety and Motor Vehicles (DHSMV) where information from the reports is entered into the state's official crash file. This system is presently completely paper-based and reports are submitted on the paper crash report. Presently each law enforcement agency using TraCS and SmartRMS submits the electronic reports to its local server but has to print paper reports to send to DHSMV where they are placed in the processing queue with the other reports for data entry. Also, the development of an XML format for data transfer between the servers and the main crash database still needs to be put in place. Unfortunately, a number of agencies are using third party vendor products that are now unable to transmit electronically. Presently these agencies must print paper reports to submit to the state. There is typically a several-month backlog of crash reports, e.g., state crash files are not closed out and available for analysis until up to a year after the calendar year.
Georgia	Georgia's crash report database is statutorily assigned to the Georgia Department of Transportation (GDOT). The system consists of: paper creation in the field by law enforcement, submission to the GDOT, microfilm storage and labeled identification, and manual data entry. There is a field based crash location tool that ensures a more accurate location of each crash as referenced by the officer. Much of the geo-locating of each individual crash is done programmatically in batch following data entry and the results go through a quality assurance process.
Maine	The State's principal crash records repository is maintained by the Maine State Police (MSP). The Maine crash database relies 100 percent on electronically collected and transmitted crash reports. Most law enforcement agencies use the Maine Crash Reporting System (MCRS) field data collection software developed by MSP, accounting for about 70 percent of all crash reports. A few agencies use a third party vendor data collection product, but those reports are submitted to the MSP similarly to the MCRS transmittals. Accordingly, the MSP crash file is generally ready for production of statewide annual statistics within a few weeks from the end of the calendar year. The MSP provides a daily copy of the database to the Maine Department of Transportation (MDOT). The MDOT staff enhances the location information on the reports with additional roadway variables, at the same time correcting inaccurate location references. At the same time the MDOT drops and truncates certain elements, such as reports below the reporting threshold. Of concern is the inaccessibility to users outside the two major crash data custodial agencies (MSP and MDOT). Most non-MSP and non-MDOT users must submit requests for data to MSP or MDOT and rely largely on custom ad hoc reports. The State expects to expand web capabilities to include web-based access to crash data by law enforcement.
Maryland	About 100,000 crash reports annually are submitted by all law enforcement agencies to the Central Records Division (CRD) of the Maryland State Police (MSP) where they are entered into the Maryland Automated Accident Reporting System (MAARS). The State currently does not receive any crash reports electronically. The crash reports are validated by CRD and non-personal information is transferred to the State Highway Administration business intelligence reporting system, MSCAN, for analysis and distribution.
Massachusetts	The statewide Crash Data System (CDS) is maintained by the Registry of Motor Vehicles (RMV) and is populated by crash reports sent to the RMV both electronically and on hard copy forms. While users have good access to RMV data and rely on it for their programming and planning needs, the State nevertheless is facing serious challenges in its attempts to provide crash data to users throughout the highway safety community. The current condition of the crash file renders it very unreliable as a source of data to drive decisions in program planning and policy-setting by the State's highway safety managers.

State	Process
New Hampshire	The New Hampshire Department of Safety (NHDOS) stores the crash files on a relational database. The vast majority of the crashes on the NHDOS crash files are reported on the State of New Hampshire Uniform Police Traffic Accident Report (form DSMV-159). Report submittals vary from weekly to monthly, quarterly, or longer. The DMV reports accident report submittals take an average of 69 calendar days to reach them. Approximately 240 police agencies submit crash reports. The New Hampshire State Police submit approximately 30 percent of the reports and the remaining 70 percent by local agencies. NHDOS submits crash record files on data tapes to the New Hampshire Department of Transportation (NHDOT) for GIS analysis, which provides roadway location, roadway characteristics, and roadway classification of the crash site. The current crash data collection process is predominately a manual process and crash data validations do not include electronic checks for correctness or completeness.
New York	New York State has over 11 million licensed drivers and registered vehicles, and approximately 800,000 motor vehicle crashes are reported annually to the Department of Motor Vehicles (DMV). To meet the increasing need for data and data analysis to support traffic safety initiatives, New York is continuing to expand and upgrade its automated traffic records systems. For the past five years, New York has been in the process of implementing the electronic ticket and crash reporting system known as TraCS (Traffic and Criminal Software). As of May 2006, the New York State DMV receives approximately 45 percent of the tickets and 15 percent of the crash reports electronically.
North Carolina	Crash data are entered into the Crash Reporting System (CRS) managed by the Division of Motor Vehicles (DMV) within the North Carolina Department of Transportation (NCDOT). Crash reports are received by DMV's Traffic Records Branch in both paper and electronic format, although at present the electronic submission of crash reports is done on a limited basis and does not account for a large proportion of the data. Analysis of crash component data is supported in a number of ways. The DMV Traffic Records Branch has the capability to run standard and ad hoc queries and answers thousands of such requests each year. Multiple years of crash data are accessible through the Traffic Engineering Accident Analysis System (TEAAS) providing a series of standard queries to produce aggregate data analysis reports. Reports may be run on one or more years of data and separately for various political jurisdictions (cities, counties or statewide). Local and state engineers as well as other authorized users can run queries online using the TEAAS tool. The University of North Carolina (UNC), Highway Safety Research Center (HSRC) maintains multiple years of crash data in a SAS data format and performs analyses on behalf of the Governor's Highway Safety Program (GHSP) and others. The HSRC maintains a web-based analysis tool for public use – the North Carolina Crash Data Query Website at http://www.hsrc.unc.edu/crash/. In addition to these various analytic resources, DMV makes copies of the data available to authorized users who can then perform their own analyses using the raw data. In most cases, the data are supplied without personal identifiers (names, addresses, etc.). Finally, the DMV Traffic Records Branch and Division of Highways, Traffic Engineering Branch, Traffic Safety Unit , cooperate to produce the annual Crash Facts report.
Pennsylvania	Pennsylvania police are required to investigate any crash where at least one person is injured and/or at least one of the involved vehicles is so damaged that it must be towed from the scene. They then report the crash to the Pennsylvania Department of Transportation (PennDOT) on a Commonwealth Police Crash Reporting Form or its electronic equivalent. Once there, the data are reduced and placed in a master data base for processing. Most of the data extracts coming into PennDOT are ad hoc requests from researchers, engineering firms, college students, and interested citizens; however, its "Crash Facts and Statistics" booklet is published to PennDOT's official web site once each year.

State	Process
Rhode Island	Crash forms are received through electronic collection from state and local police departments. E-Citation module modifications are now complete, allowing police departments to make corrections to tickets before transmitting. Deployment of mobile hardware to police departments will be completed in March 2010.
South Carolina	About 110,000 crash reports are submitted annually to the South Carolina Department of Public Safety (SCDPS), which maintains the South Carolina Collision and Ticket Tracking System (SCCATTS). This system houses the South Carolina Traffic Collision Master File obtained from data contained on the TR-310 Traffic Collision Report Form. SCCATTS serves as the statewide repository for collision and citation data and also employs a GIS component. The other major user, the South Carolina Department of Transportation (SCDOT), gets a copy of the file from SCDPS and converts it to an Access database for their engineering analysis needs. The system is totally paper dependent, requiring manual data entry. A few local law enforcement agencies are using field data collection software but the state is unable, as of yet, to receive the data electronically. Despite the absence of electronic data transfer, the data are very up to date, with collision reports being entered on daily basis.
Virginia	The Traffic Records Electronic Data System (TREDS) is the Virginia Department of Motor Vehicles (DMV) core system of record for all Virginia crash reporting. The FR300 crash report is completed for all crashes in which a fatality, injury or $1,500 or more in damage is estimated. Officers may create reports electronically (on-line or offline) or manually. If reported electronically, the crash is submitted as soon as the officer has a connection. The crash is then reviewed by supervisory personnel at the law enforcement agency. Once approved by law enforcement, it is electronically submitted to TREDS where it passes through 300+ business edit checks. It is either accepted immediately to TREDS or placed in the DMV Virginia Highway Safety Back Office review queue if there are any business rule violations or a driver match cannot be made with the DMV Driver system. If submitted manually, the report is scanned into TREDS, verified through OCR correction software and then either auto-accepted or placed in the DMV Virginia Highway Safety Back Office review queue as above. DMV processes in excess of 120,000 reportable crashes annually.

2.5 Crash Data Collection and Reporting Training

Proper training of all individuals responsible for crash data reporting and collection, including law enforcement and crash report system administrators, can improve data accuracy and integrity. Law enforcement should not only be trained on the proper techniques of crash data collection but also on the importance of the crash data. Crash data administrators should be trained on how to establish and manage procedures for handling incomplete or inaccurate reports.

All of the responding states reported having some sort of training on crash data collection and reporting. The majority of the states cited law enforcement as the target audience for training with most of the training being provided at the police academy. Many states require that instructors are experts in the field and have worked on crash reconstruction teams, which investigate fatal crashes. While few Coalition States indicated training for crash data administrators, much of this training may be considered on–the-job training instead of a formal training course. Appendix E provides a summary of the type of training provided, target audience, training agency and instructor requirements.

3.0 Impact of Technology on Crash Data Collection & Reporting

Technology incorporated into the crash data collection process (e.g., electronic data capture) can improve the timeliness, accuracy, completeness, and accessibility of the states' crash data. As shown in Figure 3.1, most Coalition States utilize electronic crash data collection or a combination of both electronic- and paper-based collection. Detailed information about each Coalition State's crash data collection reporting and technologies can be found in Appendix F. This chapter provides an evaluation of the impacts of technology on crash data collection and reporting and roadway clearance times. Performance measures on the timeliness of crash data were collected through interviews with state crash data managers and law enforcement, state Section 408 applications, state Traffic Records Strategic Plans, and the NHTSA Traffic Records Inventory.

Figure 3.1 Crash Data Collection Systems Used by Coalition States

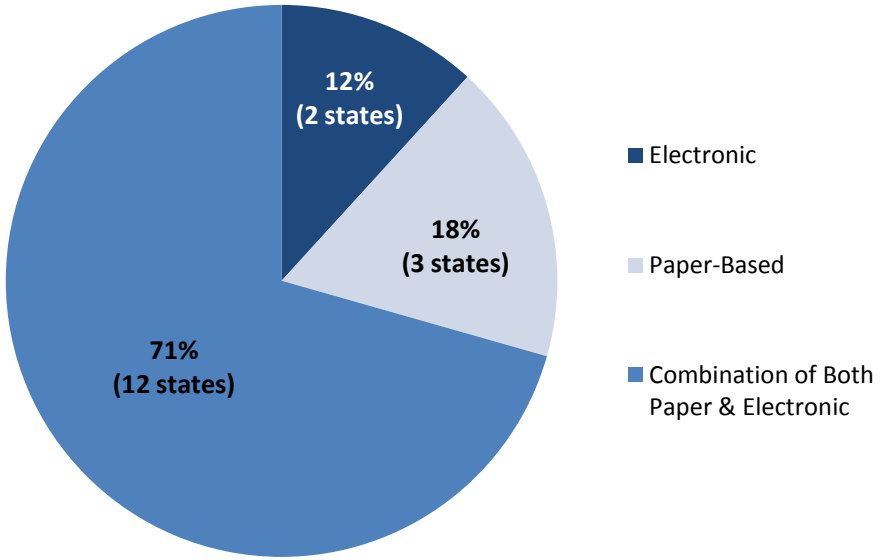

3.1 Crash Data Collection Performance Measures

Deploying electronic crash collection modules can improve the timeliness, accuracy, and accessibility of crash data being collected by law enforcement agencies at the scene of a crash. The goal to provide more timely and accurate crash data to law enforcement agencies, DOTs, Departments of Motor Vehicles (DMVs), and other key stakeholders through the use of technology has resulted in some states providing access to crash data within one week of the crash date or sooner. "Real-time" data allows law enforcement and transportation safety professionals to respond more quickly to escalating traffic safety trends and "hot spots" and helps ensure limited resources are allocated to areas with greatest need.

Deploying electronic crash collection modules can improve the timeliness, accuracy, and accessibility of crash data being collected by law enforcement agencies at the scene of a crash.

When law enforcement electronically submits crash reports, the data entry step (at the state crash repository) in the data collection process is virtually eliminated. Most electronic crash data systems have internal audits that do not allow officers to submit reports with missing data, which improves completeness. This section provides an evaluation of the quantitative impacts of technology on crash data collection and reporting and roadway clearance times.

Performance

Table 3.1 provides the average time from a crash incident to submittal of the crash report, the average timeframe for subsequent entry of crash report into the state's crash database, and the total average time from a crash to entry in the state's database for both electronic and paper systems. Performance measures provided in Table 3.1 clearly indicate electronic crash systems have improved the timeliness of the crash data collection process in the Corridor States. Law enforcement agencies reported a significant decrease in the average timeframe for crash report collection for electronic versus paper-based reporting, and state data managers reported significant improvements in the timeliness of crash report entry into the state database and increased efficiency with electronic data collection. Law enforcement agencies also reported increased efficiencies in collecting data at the scene through the use of electronic systems that automatically populate various data fields, reducing the data entry time. Some law enforcement agencies have set up electronic feeds with real time crash data maps, which are submitted to the DOT's operations center. This allows DOTs to have real time information pertaining to road closures and requests for services.

States also reported fewer errors and more complete reports with electronic systems compared to paper-based systems. For example, the Pennsylvania State Police reported an average of 8.5 errors on paper reports versus 0.5 errors for electronic reports, indicating a significant increase in accuracy with implementation of electronic crash data collection.

Table 3.1 Crash Data Collection Performance Measures

State	Average Time from Crash to Report Submittal		Average Time from Report Submittal to Entry in Crash Database		Total Average Time from Crash to Entry in Crash Database	
	Paper	Electronic	Paper	Electronic	Paper	Electronic
Connecticut	1 month	1 month	11 months	11 months	12 months	12 months
Delaware	10 days	10 days	2-4 weeks	At submittal	3-5 weeks	10 days
Florida	NR	30 days	NR	At submittal	90 days	30 days
Georgia	U/K	U/K	U/K	U/K	45 days	U/K
Maine	NR	5 days	NR	19 days	180 days	24 days
Maryland	U/K	N/A	U/K	N/A	2 months	N/A
Massachusetts	53 days	16 days	407 days	64 days	460 days	80 days
New Hampshire	69 days	NR	14 days	NR	83 days	NR
New Jersey	35 days	N/A	10 days	N/A	45 days	N/A
New York	30-45 days	13 days	51-79 days	79 days (manual review)	81-124 days	92 days
North Carolina	NR	24 hours	NR	24 hours	35 days	24 hours
Pennsylvania	32 days	10 days	12 days	16 days	44 days	27 days
South Carolina	NR	N/A	NR	N/A	35 days	N/A
Vermont	U/K	U/K	3 months	33 days	U/K	U/K
Virginia	NR	N/A	7 days	N/A	NR	N/A

Note: N/A – Information not applicable; state has recently initiated or does not have electronic collections system.

NR – Not reported.

U/K – Information unknown to state data manager.

Roadway Clearance

The Pennsylvania State Police (PSP) was the only law enforcement agency contacted that could provide a quantitative measure of the timeliness of roadway clearance times "before and after" implementation of electronic data capture, and therefore no substantive conclusions could be made regarding technology's impact on incidence clearance times. In addition, the crash clearance time performance measures provided by the PSP did not indicate any change in roadway clearance times upon implementation of an electronic crash data collection system. Some law enforcement officials indicated that there are too many variables in the field when investigating a crash to accurately measure roadway clearance times for pre- and post-implementation of electronic crash data collection. For instance, the type of crash being investigated (i.e., personal injury, property damage, or fatality) has a direct effect on how long the officer would be involved in processing a crash report and clearing the roadway. Other variables affecting roadway clearance times include how many people are involved in the collision, how many vehicles are involved in the crash, traffic conditions, weather conditions, and roadway type. Another common circumstance cited affecting roadway clearance timeliness and crash report completion is if an officer begins completing a crash report and is interrupted by something requiring attention at the scene of the collision. These individuals acknowledged that unless a specific measuring method or process is applied, they are unable to provide performance data related to roadway clearance.

Other law enforcement officials suggested that it would be inaccurate to presume that automation would have any impact on roadway clearance times. Upon arrival, officers first check for injuries, and when the human needs are addressed, work to clear the vehicles out of the travel lanes as quickly as practical (with the exception of a fatal crash, where the roadway is closed until the scene can be reconstructed). Information such as driver license, registration, insurance cards, and crash statements are obtained only after the travel lanes have been cleared. In many cases officers do not address the crash report (regardless if electronic or paper-based) until the scene is cleared and all parties are on their way, and report writing is often done in a non-crash scene location.

3.2 Crash Data Reporting Performance Measures

Technology can impact the timeliness and accessibility of crash data files made available to partner agencies for data analysis purposes.

Technology can impact the timeliness and accessibility of crash data files made available to partner agencies for data analysis purposes. Most states have set cut-off dates to "freeze" crash data included in closed-out calendar year crash files provided to end users (e.g., partner agencies). However, it is not unusual for states to continue collecting crash data from law enforcement agencies after the year has been "closed"; some states are required to do so pursuant to state statute.

Performance

According to Coalition State survey responses, states are not tracking pre- and post-electronic crash system implementation timeliness for closing out a calendar year of crash files or the time it takes for crash data to become available to stakeholders or the public. However, the crash reporting performance measures included in Table 3.2, which documents the timeliness of crash data reporting for electronic and paper-based crash systems, can be used as a baseline to guide future tracking of crash reporting timeliness. Although states may not be currently tracking this performance measure, improvements in the timeliness of crash data entry into the system will ultimately improve the timeliness of the data availability. For example, prior to Vermont implementing a system to electronically collect crash data from the police departments, crash data were not typically entered into the database until almost 18 months after the crash; but with the electronic reporting system, the 2008 state crash data file was closed out and available for use in May of 2009, which represents a significant improvement in timeliness.

Table 3.2 Crash Data Reporting Performance Measures

State	Crash Data System Used	Timeframe for Closing Out Calendar Year of Crash Data	Time Until Data are Available to Partners/ Public
Connecticut	Paper/Electronic	> 1 year	> 1 year
Delaware	Electronic	4-5 months	NR
Florida	Paper/Electronic	6 months	NR
Georgia	Paper/Electronic	NR	NR
Maine	Electronic	2 months	2 months
Maryland	Paper	5-6 months	5-6 months
Massachusetts	Paper/Electronic	NR	NR
New Jersey	Paper	4 months	5 months
New York	Paper/Electronic	9 months	9 months
North Carolina	Paper/Electronic	NR	35 days
Pennsylvania	Paper/Electronic	3-5 months	3-5 months
Vermont	Paper/Electronic	3 months	5 months

Note: NR – Not reported.

3.3 Advantages of Electronic Crash Data Systems

Support for implementation of electronic crash data systems is influenced by the cost of paper-based crash collection and manual reporting procedures, and untimely reporting associated with these systems. For example, paper-based processes require crash forms to be sorted and mailed to different locations and manually entered, perhaps multiple times, into different systems. An electronic crash system provides a number of advantages, including:

- Crash data can be entered and verified at the roadside, which improves data quality;
- Electronic systems that incorporate barcoding can reduce the amount of time it takes an officer to collect information at the crash scene and improve accuracy by allowing the officer to scan the driver license to input person data once without having to key in the information, sometimes multiple times;
- Electronic systems that incorporate drawing tools can reduce the amount of time it takes an officer, once trained, to complete a crash report and improve the uniformity and accuracy of the crash diagram;
- A properly designed system (e.g., keyboard shortcuts, on-line help) can increase officer efficiency at the roadside, which will provide more time to address other duties;
- Electronic systems provide internal audits to ensure the report is complete before submission and improve accuracy;
- Field-based location tools and GPS can improve the accuracy of the location data;
- Linking databases can provide efficiencies with other data systems and increase analytic capabilities for data users;
- Electronic records can be transmitted directly to the agencies administering the crash data systems, which improves timeliness and saves costs by eliminating the requirement to sort and mail forms; and
- By capturing crash data electronically, manual data entry is eliminated, which improves both quality (e.g., reduced errors due to illegible reports) and timeliness and reduces staffing needs for data entry.

3.4 Challenges to Implementing Electronic Crash Data Systems

One of the most significant challenges to implementing electronic crash data systems, especially on a state or multi-state basis, is to achieve consensus that an electronic crash system is a top priority. Challenges to implementing an electronic crash data system may include:

- The state must identify ways to encourage use of the electronic system when agencies are not required through legislation or policy to submit crash reports electronically;
- Multiple agencies using various electronic crash data collection systems which are not compatible with the existing crash database;
- Agencies use different paper-based crash forms with data elements which do not match, and consensus becomes difficult when determining which crash data elements will become standard for electronic capture;
- Some existing systems are difficult to upgrade or update (e.g., add new data fields);
- Wireless network coverage is not universally available, which can hinder a law enforcement officer's ability to transmit crash data directly from the field;
- Law enforcement agencies do not have the necessary equipment or funding available to purchase the equipment;
- Electronic systems often require upgrades, which necessitates additional funding and support staff;
- Although GPS systems are intended to provide accurate location data, agencies have reported inaccurate data when crash reports are not completed at crash scene;
- Law enforcement needs additional technical support and training to implement an electronic system; and
- Data sharing across agencies (e.g., crash, EMS data) may present legal or other issues.

3.5 System Costs

Crash data collection and reporting systems are complex and may have multiple "owners" of different components within the system. These systems are typically developed, implemented, and upgraded in phases, through multiple projects and funding sources, over several years. The majority of Coalition States were unable to provide specific expenditures for development and implementation improvements to their current crash data systems.

Georgia reported implementing a "zero-cost solution" for the state. This was achieved by allowing a vendor limited exclusive rights to the sale of crash data on behalf of GDOT. Two states reported current contract amounts over multiple years (e.g., eight year/$8 million contract for Connecticut, and $3 million to $5 million in New York for the state crash repository's contract with amendments). Example project costs are provided in Appendix G.

4.0 Crash Data Systems and Processes Best Practices

The Coalition States continue to evolve their crash data collection and reporting processes through the use of new or improved software and technology, training, and other process efficiencies. This chapter identifies notable or best practices implemented in the Coalition States to improve the timeliness, accuracy, completeness, uniformity, integration, and accessibility of their crash data collection and reporting systems. This chapter also identifies some national best practices in crash data collection and reporting systems.

4.1 I-95 Coalition States' Crash Data Collection and Reporting Processes Best Practices

Best practices and efficiencies in I-95 Corridor Coalition States' crash data collection and reporting processes were identified through interviews with crash data collection managers and law enforcement agencies; a review of the state Traffic Records Strategic Plans and NHTSA Section 408 State Traffic Safety Information System Improvement Grants applications; the NHTSA State Data Improvement Projects Clearinghouse; and Association of Transportation Safety Information Professionals (ATSIP) Best Practices Challenge winning projects.

The best practices and efficiencies identified among the Coalition States are cross-referenced with NHTSA's six data quality performance measures (timeliness, accuracy, completeness, uniformity, integration, and accessibility) in Table 4.1, which is followed by a detailed description of the best practice. In addition to the best practices already implemented in the Coalition States, some promising practices currently being planned or deployed are identified.

Table 4.1 I-95 Coalition States Best Practices and Efficiencies by Impacted Data Quality Measure

State	Accessibility	Accuracy	Completeness	Data Integration	Timeliness	Uniformity
Delaware		E-Crash	E-Crash	E-Crash	E-Crash	E-Crash
Florida	TRIPP	Law enforcement training		Unified roadway base map/TRIPP		
Georgia	Internet query system	Location tool		Internet query system/ location tool		
Maine			MCRS		MCRS	MCRS
Maryland	MSCAN	eMAARS	eMAARS		eMAARS	
New Jersey	EMS data linkage	EMS data linkage	EMS data linkage	EMS data linkage	EMS data linkage	EMS data linkage
North Carolina					TraCS	
South Carolina	SCCATTS	SCCATTS	SCCATTS	SCCATTS	SCCATTS	
Vermont	Web-Crash	Web-Crash	Web-Crash		Web-Crash	WebCrash
Virginia			Commercial vehicle data extraction			

- **Delaware's** crash data collection is currently 100 percent electronic. Delaware was using Traffic and Criminal Software (TraCS); however, the state was not able to customize TraCS to meet all their data needs. As a result, Delaware developed a new electronic crash data system called E-Crash which was implemented on December 28, 2009. The system was designed with the flexibility to be updated as necessary, and it is a user friendly system with on-line help. E-Crash enables law enforcement to enter crash data more efficiently by auto-populating data elements which are not applicable to the crash; reducing the amount of time it takes for a law enforcement officer to complete a crash report. For example, if the crash involved a bus, the officer would input the information on the bus; otherwise, the screen would not appear. The system

also eliminates some reporting errors found with TraCS, such as the ability to enter crash dates and birthdates occurring in the future, and the system has expanded the data elements to be MMUCC compliant. The E-Crash system is linked to driver license, vehicle registration, and citation information.

- **Florida** has developed a workshop on how to accurately complete a Florida crash report for law enforcement officers, trainers, community service aides, and city/county traffic planners. The workshop covers common errors made on crash reports which were identified by the Law Enforcement Training Committee of the Traffic Records Coordinating Committee (TRCC). In an effort to provide a foundation for consistent GIS data exchange, Florida is currently establishing a unified roadway base map to include all roads for all public entities. The unified base map will facilitate data collection of lengths and point items, establish methods for data sharing, and establish partnerships and cooperative agreements with various agencies to ensure data accuracy and consistency. Florida is also currently developing a Traffic Records Information Repository and Analysis System to integrate crash data from multiple agencies in a secure, scalable data warehouse, and developing a web-based integrated crash data system to provide analytical, mapping, and statistical reporting tools to interested end-users.
- **Georgia** is utilizing a map-based location tool that references Georgia Department of Transportation (GDOT) base maps to provide a more accurate location of each crash as referenced by the officer. This tool ensures GDOT engineers are able to link to data within the Department's roadway characteristics file which is critical to safety analyses. Georgia is currently developing an internet query system for the state's crash data available over the Division of Public Health's publicly accessible health data query system to enhance crash and injury surveillance capacity.
- **Maine** has all of the crash reports submitted to the state electronically through the Maine Crash Reporting System (MCRS), which is provided to local agencies. MCRS was designed to minimize the data collection burden on the officer through careful design of the interface, and provides keyboard shortcuts for all major functions. Diagramming functionality, which is deemed crucial to crash analysis by many transportation safety stakeholders, is built-in and audit checks are performed to ensure complete reporting of crash data. The system is currently being upgraded to increase MMUCC compliance.
- **Maryland** has implemented a new crash reporting system called the Enhanced Maryland Automated Accident Reporting System (eMAARS). Along with the development of the E-TIX Crash Reporting Application (CRA), eMAARS will allow for the electronic submission of data to the Maryland State Police Central Records Division (CRD). eMAARS is a web based data entry system for handling the paper crash reports, whereas CRA will be the new electronic form deployed on officers' vehicles. Each of these systems (E-TIX, CRA, and eMAARS) make up the Automated Crash Reporting System (ACRS). Law enforcement agencies will not be able to adopt electronic collection data all at once, so the State is building applications that present a few options to law enforcement agencies for submitting to CRD. Development of the eMAARS data entry component and the E-TIX electronic submission component are slated to be completed at the end of 2010.

- **New Jersey** is currently working to integrate Emergency Medical Services (EMS) field data from vehicular crashes with crash data. This project will improve the completeness, accuracy, timeliness, and uniformity of electronically transmitted crash data available in the state repositories. The project will also enable the Office of Emergency Medical Services, Department of Transportation, Department of Health and Senior Services, and the Motor Vehicle Commission to download data in a uniform format as well as compile various standard summaries for use in local safety programs which will improve accessibility.
- **North Carolina's** DMV supplies TraCS software, training, and tier support free to any interested law enforcement agency in the state. Encouraging law enforcement agencies to use TraCS will improve the timeliness of crash data into the system.
- **South Carolina** has developed the South Carolina Collision and Automated Traffic Ticketing System (SCCATTS) electronic crash data system. SCCATTS is currently being field deployed with the Highway Patrol and Transport Police, including: field testing, software implementation, hardware deployment, and training. The deployment of the SCCATTS system will improve the timeliness, accuracy, and completeness of the state's crash data. Barcoding of South Carolina vehicle registration is being planned for 2010 deployment. Barcoding will reduce the amount of time it takes for officers to fill out a report and improve the accuracy and completeness of the reports. A second phase of the SCCATTS project will include interfaces with related databases which will improve the accessibility of the data.
- **Vermont** law enforcement is not required to use the electronic crash data collection system. To build a system that would be attractive for law enforcement agencies to use, the state worked with law enforcement from all levels to determine the best look and feel for a web application/user interface. The law enforcement feedback was incorporated into the development of the web-Crash system which allows law enforcement to submit reports electronically. Currently all Vermont State Police and 50 of the 65 local agencies are electronically submitting crash reports. The state has realized improvements in the timelines, accuracy, completeness, and uniformity of the collected data in the crash file. The web-Crash system provides participating law enforcement agencies with query abilities to run ad hoc reports, providing increased accessibility.
- **Virginia** was the Association of Transportation Safety Information Professionals (ATSIP) 2008 Best Practices Challenge winner for their *DMV Advanced CMV Data Extraction* project. Prior to this project, commercial motor vehicle data was only captured on a Virginia State Police commercial supplemental report (SP 50), which is separate from the statewide FR300 crash report form. While the state police were submitting these reports to the Federal Motor Carrier Safety Administration (FMCSA) via the SafetyNet database, no commercial vehicle crash data were being collected by local law enforcement agencies resulting in a statewide underreporting of commercial motor vehicle and bus crashes of 40 to 50 percent. The project team improved the quantity and quality of the data by extracting and analyzing the missing and incomplete commercial motor vehicle data from Virginia's crash/highway safety information systems. The project has resulted in a 166 percent increase of fatal and non-fatal large truck and bus crash records added to SafetyNet and the Motor Carrier

Management Information System (MCMIS), improving the completeness of large truck and bus related fatal and non-fatal crash data. In 2007, Virginia developed a new uniform crash form that merged the SP 50 and the FR300 to enable both local and state law enforcement to collect uniform commercial motor vehicle crash data; the new form also increased MMUCC compliance.

4.2 National Best Practices in Crash Data Systems

To provide a better perspective of the current state of the practice in crash data systems, additional documentation was reviewed to identify best practices and efficiencies at the national level. The majority of the identified best practices are techniques for overcoming the challenges of implementing an electronic system but also include some unique methods for improving the data quality measures.

National best practices and efficiencies have been identified through the ATSIP best practices challenge, the national TRCC, Governors Highway Safety Association (GHSA), and the NHTSA State Data Improvement Projects Clearinghouse. Table 4.2 cross-references the identified best practices and efficiencies with NHTSA's six data quality performance measures and is followed by a detailed description of the best practices.

Table 4.2 National Best Practices and Efficiencies by Impacted Data Quality Measure

State	Accessibility	Accuracy	Completeness	Data Integration	Timeliness	Uniformity
Arizona		Returned report tracking system	Returned report tracking system			
Illinois		MCR			MCR	
Indiana		eCVRS	eCVRS		eCVRS	eCVRS
Iowa	CMAT	TraCS	TraCS		TraCS	
Kansas		LEL FARS analyst coordination	LEL FARS analyst coordination			
Kentucky		E-CRASH	E-CRASH		E-CRASH	E-CRASH
Louisiana		Law enforcement funding	Law enforcement funding		Law enforcement funding	
Michigan		TCRS	TCRS			
Minnesota		Crash data standards	Crash data standards	Crash data standards		Crash data standards
Ohio		Vendor coordination	Vendor coordination		Vendor coordination	

- **Arizona** is currently developing a tracking system to ensure reports returned to law enforcement for correction are returned for re-entry into the crash database. The tracking system will help ensure accurate and complete crash reports.
- **Illinois** is offering grants to local law enforcement agencies interested in adopting their Mobile Capture and Reporting System (MCR) to subsidize the purchase of printers for officers' cars (MCR-P) and for agencies with an existing crash reporting system to offset the costs of creating an electronic submittal process utilizing the XML format (MCR-XML) published by the state in order to entice local agencies to submit their crash reports electronically. The state is also expanding the marketing, training, and support programs for MCR to reach additional law enforcement agencies. As more agencies shift to electronic reporting the timeliness and accuracy of the crash data will improve, and the manual data entry workload of the DOT will be reduced.

- **Indiana** has become a leader in electronic crash reporting with their Electronic Vehicle Crash Records System (eVCRS). Initially the system was challenged by the lack of computers in police units and reluctance to change to a computer based report. The state provided eCVRS, configuration assistance, regular upgrades, and help desk to agencies free of charge. To encourage local agencies to enroll in eVCRS, they were provided with laptops and urged to enroll by law enforcement liaisons (LELs). From December 2005 to December 2008, the electronic submission rate increased from 32 percent to 98 percent. The system also improved submission times from seven percent of reports submitted in five days or less in 2004 compared to 77 percent submitted within the same time frame in 2008. Data quality has also improved from a 40 percent error rate to three percent during this same time period. The system includes an electronic barcode scanning capability that allows officers to auto load driver and vehicle information into the crash report, reducing the amount of time it takes to fill out a report and improving accuracy and completeness of reports. The system also includes an Easy Street draw program which eliminates hand drawing of crash diagrams and improves the uniformity of collision diagrams. Electronic reporting has reduced operating costs for participating agencies due to reduced mailing cost and staff time.
- **Iowa** has been a national leader in developing and implementing collaborative crash data tools to gather, integrate, and analyze data. Iowa DOT led the development of the Traffic and Criminal Software (TraCS) electronic crash data collection system, which is in use in 17 states. The state developed the Crash Mapping Analysis Tool (CMAT) to provide law enforcement and other local agencies access to their own data. The DOT provides free analysis software and training to all state crash data users.
- **Kansas** has been able to improve the accuracy and completeness of blood alcohol content (BAC) reporting by having the Law Enforcement Liaisons (LELs) coordinate with the state Fatality Analysis Reporting System (FARS) Analyst. Annually in June, the FARS Analyst provides the LELs with a list of all of the previous year fatal crash reports with missing BAC data. During visits with local law enforcement agencies with incomplete records the LELs attempt to obtain the BAC data from supplemental reports (not forwarded to the FARS Analyst) or coroner's reports. If neither is available, the LEL follows up with the reporting officer and requests a supplemental report be submitted as soon as possible. For incomplete data submitted by the Kansas Highway Patrol (KHP), the LEL meets with command staff to discuss the issue, and KHP headquarters sends a memo to all KHP troops with a list of incomplete reports directing them to obtain and submit the supplemental reports. In the fall, the LELs are provided an updated list of missing reports for follow up action. As a result of the LEL's direct contact with law enforcement agencies, the number of fatal crash reports with unknown BACs has been drastically reduced due to failure to submit reports, and the LELs have enhanced relationships with law enforcement agencies.
- **Kentucky's** *Open Portal Solution (KyOPS) Mapping* project was identified as a runner up in the ATSIP 2008 Best Practices Challenge. Kentucky State Police's KyOPS software suite provides officers throughout the state with a tool to electronically submit reports including an E-CRASH application for crash reports. The application provides quality control edits to ensure

the accuracy of the reports. The E-CRASH reports are automatically processed, stored, managed, and maintained in the crash data and document repositories. At project submittal, over 40 percent of the crash reports were submitted using the E-CRASH application. KyOPS also includes an application that allows officers to collect driver, passenger, and witness information from 37 states by scanning a driver's license with a 2-D barcode. This feature is embedded in the E-CRASH application.

- **Louisiana's** Department of Transportation and Development has hired a law enforcement expert (LEE), which is similar in function to a state highway safety office's law enforcement liaison (LEL), who identifies problematic agency crash reporting trends and works with law enforcement agencies individually to address and resolve their specific crash reporting problems. In some cases the state is providing funding to law enforcement agencies to purchase new computer hardware and/or software to assist with the accuracy, completeness, and timeliness of submission.
- **Michigan** developed and integrated an automated crash locating tool into their Traffic Crash Reporting System (TCRS). The tool utilizes a geographical interface that allows officers to select a crash location which is validated with real-time data. A quality assessment check was run after deployment of the locator tool, and it was found that approximately 98 percent of the reported crashes were being located into the TCRS.
- **Minnesota** developed and published crash data standards for law enforcement agencies to adhere to when creating crash reporting modules within their records management system (RMS). The standards were the foundation for implementing a crash database interface for law enforcement to electronically submit reports from their RMS and provided uniform reporting standards.
- **Ohio** has several vendors providing law enforcement agencies with electronic crash data collection systems, many of which do not enable electronic submission of crash reports to the Ohio Department of Public Safety (ODPS). ODPS is currently providing funding and working with vendors and large law enforcement agencies to provide the capability to submit crash data electronically to the State. Electronically submitting reports will improve the timeliness of the crash data, and since electronically submitted reports are subject to edit checks, the accuracy and completeness of the crash records will also improve.

5.0 Funding for Crash Data System Improvements

State, regional, and local agencies (e.g., law enforcement) interested in securing funding or assistance for traffic records system improvements, including equipment and training, should contact their state highway safety office (SHSO; contact information is provided in Appendix A, Table A.2. Much of the Federal funding specifically aimed at traffic records improvements flows through the SHSOs, which are required to administer a Traffic Records Coordinating Committee (TRCC). This statewide stakeholder committee facilitates the planning, coordination and implementation of projects to improve a state's traffic records system and oversees the Traffic Records Strategic Plan which details the state's most critical traffic records data issues. The TRCC is aware of other funding sources which are not administered by the SHSO to fund crash data system improvements. Typically all levels of law enforcement are represented by their respective state organization on the TRCC.

The Coalition States have identified many crash data system improvement projects in their traffic records strategic plans and Section 408 grant applications. The most commonly cited funding sources for crash data system improvement projects are the Section 402 State and Community Highway Safety grant program, the Section 408 Traffic System Information System Improvement grant program, state, county, and local funds.

5.1 Funding Sources Commonly Used for Crash Data System Improvements

The following are funding sources the Coalition States have used:

23 U.S.C. 402: State and Community Highway Safety Grants – Supports a full range of highway safety behavioral programs, including the following countermeasure programs: impaired driving, occupant protection, police traffic services (e.g., enforcement), emergency medical services, traffic records, motorcycle safety, pedestrian and bicycle safety, non-construction aspects of road safety, and speed enforcement. A minimum of 40 percent of a state's Section 402 funds must be expended by local governments, or be used for the benefit of local governments. To receive Federal highway safety grant funds, SHSOs must submit an annual Highway Safety Performance Plan (HSPP) and Highway Safety Annual Report to the National Highway Traffic Safety Administration (NHTSA).

23 U.S.C. 408: State Traffic Safety Information System Improvement Grants – Encourages states to adopt and implement effective programs to improve the timeliness, accuracy, completeness, uniformity, integration, and accessibility of state data needed to identify priorities for national, state, and local highway and traffic safety programs; to evaluate the effectiveness of efforts to make such improvements; to link the state's data systems, including traffic records, with other data systems within the state; and to improve the compatibility of the state's data system with national data systems and data systems of other states.

23 U.S.C. 154 and 164 Transfer Funds – States in which Federal-aid highway funds are transferred based on noncompliance with 23 U.S.C. 154 Open Container Requirements or 23 U.S.C. 164 Minimum Penalties for Repeat Offenders for Driving While Intoxicated or Under the Influence can transfer certain Federal Aid highway construction funds into the Section 402 program for use in alcohol countermeasure programs or into Section 148, Highway Safety Improvement Program (HSIP). Funds specified for alcohol countermeasures may be used for data improvements relevant to alcohol programs only. If a state transfers funds into the HSIP, funds can be used for highway safety data activities.

23 U.S.C. 406: Safety Belt Performance Grants – Encourages states to enact and enforce primary safety belt laws. A state may use these grant funds for any behavioral or infrastructure safety purpose under Title 23, for any project which corrects or improves a hazardous road location or feature, or proactively addresses highway safety problems. At least $1 million of each state's allocation must be obligated to behavioral highway safety activities.

Commercial Vehicle Analysis Reporting System (CVARS) – CVARS is a cooperative effort between NHTSA and the Federal Motor Carrier Safety Administration (FMCSA) to provide grant funding to states in order to improve the collection and reporting of all truck and bus crash-related data into the motor carrier management information system. This project enters into agreements with state agencies to train state employees and Motor Carrier Safety officials to develop an improved national data system of all crashes involving commercial motor vehicles containing carrier and driver identifiers, and citation and conviction data for the purposes of carrying out enforcement programs, and a new national analytical data system similar to the Fatality Analysis Reporting System (FARS) for the purpose of traffic safety problem identification, program evaluation, planning, and other safety related issues.

Motor Carrier Safety Assistance Program (MCSAP) - States are authorized and encouraged to use a portion of their MCSAP funds for data collection and analysis as well as improvements to existing systems. A portion of MCSAP funds are available for High Priority Projects (Section 4107) that can include commercial motor vehicle safety data improvement initiatives. Periodically, reallocated funding becomes available which may be spent on data improvements.

5.2 Additional Funding Sources for Crash Data System Improvements

Reviewing the funding sources associated with the Coalition States' planned data improvements revealed additional funding sources which have been untapped. These identified gaps may provide states with additional funding to expedite planned projects or expand projects to address data quality deficiencies identified in their planning documents. The funding resources identified below may be used under certain circumstances to improve crash data processes systems.

Crash Data Improvement (CDI) – Discretionary funds intended to support efforts in states to improve the collection and analysis of commercial motor vehicle crash data and maintain a high level of quality data reported to FMCSA's Motor Carrier Management Information System (MCMIS) crash file.

23 U.S.C. 410: Alcohol-Impaired Driving Countermeasures Incentive Grants – Provides an incentive to states to implement effective programs to reduce traffic safety problems resulting from impaired driving. Funding may be utilized for law enforcement training, which can lead to improvements in data collection timeliness and accuracy.

23 U.S.C. 148: Highway Safety Improvement Program (HSIP) – HSIP funds may be used for planning, development and operation of a system for managing highway safety and for data improvements as they relate to the state HSIP and the state Strategic Highway Safety Plan (SHSP).

23 U.S.C. 505: State Planning and Research Funds – These funds may be used to develop and maintain safety-related data systems needed to conduct studies of the safety of the surface transportation system, as well as to develop and maintain a system for managing highway safety.

Safety Data Improvement Program (SaDIP) - The SaDIP grant provides discretionary grants to States for activities to improve the accuracy, timeliness and completeness of safety data including, but not limited to, large truck and bus crash data, roadside inspection, data enforcement data, driver citation data, and registration data. Funds can be used to purchase equipment, train law enforcement officers in collecting crash data, hire temporary staff to manage data quality improvement programs, revise outdated crash report forms, and code and enter crash data.

National Highway System (NHS) and Surface Transportation Program (STP) – NHS and STP funds may be used for safety data systems as they relate to the planning, development, and operation of a system for managing highway safety.

Edward Byrne Memorial Justice Assistance Grant (JAG) - JAG funds may be used for state and local initiatives, technical assistance, training, personnel, equipment, supplies, contractual support, information systems for criminal justice, and criminal justice-related research and evaluation activities that will improve or enhance law enforcement programs and planning, evaluation, and technology improvement programs.

Guidance to states on accessing funding sources for crash data system improvement projects may be found through collaboration with the states' NHTSA regional office and/or Federal Highway Administration (FHWA) division office. These agencies serve as a resource and can provide additional direction on the applicability and restrictions of a potential funding source for a particular project. County and local agencies are encouraged to contact their respective state organization who works with the state's Traffic Records Coordinating Committee (TRCC) to identify funding opportunities for crash data system improvements.

6.0 Recommended Practices for Crash Data System Improvements

This section provides recommendations to address typical challenges encountered in implementing improvements and improvement strategies for data quality improvements. The recommendations are based on best practices and input received from states and other traffic records professionals.

6.1 Recommendations for Addressing Common Challenges

Various challenges are encountered when upgrading or implementing advanced crash data system technologies. This section reviews the common challenges (as identified in Section 3.4) states face during this process, followed by recommendations and/or proven successful practices for addressing these challenges.

Front-End Considerations

Several factors should be considered prior to designing and implementing a new electronic crash data system or identifying upgrades for an existing system. States should identify the ultimate desired capabilities or outcomes for the system, instead of focusing on current system capabilities. For example, the current system may not be capable of linking crash data to other data systems (EMS, roadway, vehicle, etc.); however data linkage is a desired outcome for the future system.

When implementing an electronic system for the first time, the state should investigate existing technology utilized by law enforcement agencies. Agencies may already be using technology for crash data collection which may not be compatible with all systems. While it may not be practical or feasible to select a system compatible with all existing technology, it is beneficial to identify and consider systems that would accommodate the majority of system users.

> *"States should look toward interim and phased solutions rather than trying to overhaul an entire system at once."*
> *- Bob Rasmussen, ATSIP President*

Limitations in funding, resources, and manpower limit the ability to completely overhaul an entire system at one time. States should incorporate interim solutions and phased upgrades over multiple years to make system improvements more feasible and achievable.

Crash Report Filing Requirements

Law enforcement agencies are not required (by law or through administrative policy) to submit crash reports electronically to the state.

- ✓ Identify ways to encourage the use of an electronic system when revising the law is not a practical solution. States have found success by obtaining and incorporating feedback from law enforcement during the development of the system. Involving law enforcement in the development process results in a sense of ownership of the system and promotes a more user friendly system which officers are more likely to use.

- ✓ Provide free training and technical support, and assist with grant funding to law enforcement agencies to reduce the burden of implementing an electronic system and to encourage use of the system. Consider hiring law enforcement liaisons (LELs) dedicated to assisting agencies improve their crash reporting.

- ✓ Proactively market the use of the electronic system to law enforcement agencies throughout the state to promote use of the system. Agencies may not clearly understand the benefits of adopting the system, which may work as a deterrent. Promote the system by marketing the financial benefits associated with reduced staff time and mailing costs. Law enforcement liaisons can also be a resource for promoting the use of electronic systems to law enforcement agencies.

Agencies in various states have reported inaccurate location data when using GPS systems (e.g., crash reports may not be completed at the crash scene thereby causing inaccurate GPS recording).

- ✓ Educate police enforcement on the importance of capturing accurate crash location data (e.g., data are used for identifying high crash locations and countermeasure strategies).

- ✓ Provide adequate training on using GPS equipment for officers in the field.

- ✓ Institute an administrative policy to require officers to report crash locations at the scene.

Data Sharing

Data sharing across agencies (e.g., crash, EMS data) may present legal or other issues.

- ✓ Actively participate in the State's Traffic Records Coordinating Committee (TRCC) to encourage collaboration among agencies responsible for traffic records systems.

- ✓ Develop data sharing procedures and agreements with various stakeholders to manage the risk of liability issues.

System Compatibility

Law enforcement agencies within a state are using various electronic collection systems which are not compatible with the existing crash database.

- ✓ Develop crash data standards for law enforcement agencies to adhere to when creating crash reporting modules within their records management system (RMS) to alleviate issues associated with system compatibility and provide uniform reporting standards. The standards can serve as a foundation for implementing a crash database interface for law enforcement to electronically submit reports from their RMS. Provide assistance in identifying funding or grants for law enforcement agencies, and work with vendors and law enforcement agencies to provide the capability to submit crash data electronically to the state database. Coordination is critical for solving existing compatibility issues.

Inflexible Systems

The existing state crash data system is difficult to upgrade or update (e.g., add new data fields).

- ✓ Consider potential future upgrades when evaluating potential systems and search for systems that provide flexibility for future upgrades. Some states have opted to develop their own systems instead of using existing systems provided by vendors to provide for more flexibility.

Agency Coordination and Cooperation

Law enforcement agencies in the state currently use different paper-based crash forms with various data elements collected, and agreement has not been reached regarding which crash data elements will become standard for electronic capture.

- ✓ Collaborate and coordinate with the law enforcement agencies to develop a consistent standard for data collection in the state.
- ✓ Deploy law enforcement liaisons (LELs) to educate agencies on the need for data standards and to coordinate with the various agencies.
- ✓ Actively participate in the State's Traffic Records Coordinating Committee (TRCC) to encourage collaboration among agencies responsible for traffic records systems. Collaborative efforts promote an integrated state data system and can reduce duplicate efforts in analysis and reporting.

Resources and Funding

Law enforcement agencies do not have the necessary equipment or funding available to purchase the equipment.

- ✓ State agencies should assist law enforcement in identifying funding or grants to obtain computer hardware and/or software required for electronic data capture and submittal and consider hiring law enforcement liaisons dedicated to assisting agencies improve their crash reporting.

- ✓ County and local agencies are encouraged to contact their respective state organization who works with the state's Traffic Records Coordinating Committee (TRCC) to identify funding opportunities for equipment and/or software to improve their crash data system.

Law enforcement agencies need additional technical support and training to implement an electronic system.

- ✓ State agencies should provide assistance to law enforcement agencies by providing configuration assistance, regular upgrades, help desk assistance, and training to law enforcement agencies to promote use of the electronic system.

- ✓ County and local agencies are encouraged to contact their respective state organization who works with the state's Traffic Records Coordinating Committee to identify funding opportunities for training and technical support for crash data system improvements.

6.2 Data Quality Improvements

States have demonstrated success in deploying various technologies and strategies into crash data systems to improve data quality. For example, some states use electronic barcode scanning to retrieve person information to improve the efficiency of crash data collection at the site which has also improved the accuracy and completeness of submitted crash reports. Table 6.1 provides a summary of various technologies and/or strategies to consider for crash data quality improvements sorted by the data quality measure which is impacted and followed by a discussion of the technologies/strategies.

Table 6.1 Technologies & Strategies for Data Quality Improvements by Impacted Data Quality Measure

Technology/Strategy	Accessibility	Accuracy	Completeness	Data Integration	Timeliness	Uniformity
Data Collection at Crash Scene						
Barcode scanning of driver license and vehicle registration		X	X			
Crash locating tool		X				
Electronic collision diagram drawing applications		X				X
Electronic Submission & Quality Assurance/Quality Control						
Electronic submittal capability		X	X		X	
Crash data standards		X	X			X
Electronic submission validation rules and audits		X	X			
Tracking system for reports returned to law enforcement for edits		X	X		X	
Integration and Accessibility						
Data sharing agreements	X			X		
Statewide data warehouse	X			X		
Establish unified roadway base map	X	X				X
Integrate crash data systems with other state databases	X	X	X	X		X
Provide partners with internet query capabilities	X					
Training						
Stress importance of many uses of crash data and need for quality data collection						
Continued law enforcement training		X	X			X

Data Collection at Crash Scene

- Use field-based location tools and GPS capabilities in the data collection process to provide more accurate crash location data. Crash location is a critical component of safety analysis. Accurate location data is necessary to identify potential hot spots for safety improvement and can lead to systemic improvements.

- Provide an electronic drawing application to enforcement agencies for collision diagrams to ensure collision diagrams are uniform and to improve accuracy. Collision diagrams are an essential component of safety analysis; the diagrams provide a visual representation of the crash occurrence by demonstrating the direction of travel and surrounding circumstances.

Electronic Submission & Quality Assurance/Quality Control

- Provide the capability for law enforcement agencies to submit crash reports electronically to improve the accuracy and timeliness of the crash data by eliminating the manual data entry process. Validation rules and audits should be a key component of the system to eliminate errors and incomplete reports.

- Develop crash data standards for agencies to adhere to when creating crash reporting modules within their records management system to promote system compatibility and provide uniform reporting standards.

- Institute a tracking system for reports returned to law enforcement for clarification or corrections to help ensure reports are returned resulting in more complete and accurate data.

Integration and Accessibility

- Establish a unified roadway base map to include all roads for all public entities. The unified base map will facilitate data collection of lengths and point items, establish methods for data sharing, and establish partnerships and cooperative agreements with various agencies to ensure data accuracy and consistency.

- Make crash data accessible to the state's safety stakeholders to promote cooperation and coordination of safety efforts.

- Develop data sharing agreements to reduce potential liability risks.

- Integrate the crash database with other state databases, which can supplement the crash data with additional information related to the characteristics of the roadway, vehicle, driver, or medical consequence and provide a more accurate picture of the crash.
- Develop a secure data warehouse to integrate data from multiple agencies.
- Develop web-based tools to provide partners with analytical, mapping, and statistical reporting tools.

Training

- Provide continued training of law enforcement to promote accurate and uniform crash data.
- Stress the importance of crash data in all training provided to law enforcement on crash data collection.
- Identify the most common errors made in crash report completion and develop training classes to teach proper procedures.

A. State Contact Information

Table A.1 Stakeholder Contact Information

State	Lead Agency for Crash Data Collection	Lead Agency for Crash Data Reporting	Crash Data System Contact	Crash Form Contact	TRCC Key Contact
Connecticut	Connecticut Department of Transportation (ConnDOT)	All agencies accountable to send to ConnDOT	Vacant	Sebastian Puglisi ConnDOT, Accident Records Section	Joseph Cristalli, ConnDOT, Transportation Safety Section
Delaware	Delaware State Police (DSP)	Delaware State Police in conjunction with Delaware Department of Transportation	Tammy Hyland, Department of Safety and Homeland Security, DSP	Captain William Alexander, Department of Safety and Homeland Security, DSP	Vacant
District of Columbia	U/A	U/A	Carole Lewis, District Division of Transportation, Safety Division	U/A	U/A
Florida	Department of Highway Safety and Motor Vehicles (DHSMV)	DHSMV	Joe Santos, Florida Department of Transportation	Susan Nash, DHSMV, Division of Administrative Services	Roger Doherty, Florida Department of Transportation
Georgia	Georgia Department of Transportation, Office of Traffic Operations	Georgia Department of Transportation, Office of Traffic Operations	Norm Cressman, Georgia Department of Transportation	Norm Cressman, Georgia Department of Transportation	Michael Smith, Governor's Office of Highway Safety
Maine	Maine State Police	Maine State Police/ Maine Department of Transportation	Duane Brunell, Maine Department of Transportation, Systems Management Division	Christopher Grotton, Maine State Police, Traffic Safety Unit	Lauren Stewart, Bureau of Highway Safety
Maryland	Maryland State Police (MSP), specifically the Central Records Division (CRD)	MSP and the Maryland State Highway Administration	Ida Williams, Department of Maryland State Police, Central Records Division	Ida Williams, Department of Maryland State Police, Central Records Division	Doug Mowbray/ Neil Pedersen, Maryland State Highway Administration, Office of Administrator
Massachusetts	Massachusetts Registry of Motor Vehicles (RMV)	All law enforcement agencies accountable to send to RMV	Karen Perduyn, Massachusetts RMV	Karen Perduyn, Massachusetts RMV	Sheila Burgess, Executive Office of Public Safety and Security, Highway Safety Division

State	Lead Agency for Crash Data Collection	Lead Agency for Crash Data Reporting	Crash Data System Contact	Crash Form Contact	TRCC Key Contact
New Hampshire	U/A	U/A	Roberta Bourque, New Hampshire Department of Safety/DMV	Roberta Bourque, New Hampshire Department of Safety/DMV	Debra Garvin, New Hampshire Highway Safety Agency
New Jersey	Police Departments statewide	NJDOT	William Beans, NJDOT, Bureau of Safety Programs	William Beans, NJDOT, Bureau of Safety Programs	William Beans, NJDOT, Bureau of Safety Programs
New York	New York State Department of Motor Vehicles (NYSDMV)	NYSDMV	Michael McMullen/Robin Long, NY State Dept. of Motor Vehicles	Lynda Nowik, NYSDMV, Accident Records Bureau	Anne Dowling, NY Institute for Traffic Safety Management and Research
North Carolina	NCDOT Division of Motor Vehicles/Traffic Records Branch	NCDOT Division of Motor Vehicles/Traffic Records Branch	Ethel Keen, NCDOT Division of Motor Vehicles/Traffic Records Branch	Ethel Keen, NCDOT Division of Motor Vehicles/Traffic Records Branch	John Stokes, North Carolina Department of Transportation
Pennsylvania	Police agencies in the state	Pennsylvania Department of Transportation (PennDOT)	William Hunter, PennDOT, Bureau of Highway Safety and Traffic Engineering	William Hunter, PennDOT, Bureau of Highway Safety and Traffic Engineering	William Hunter, PennDOT, Bureau of Highway Safety and Traffic Engineering
Rhode Island	U/A	U/A	U/A	U/A	Daniel DiBiasio, Rhode Island Department of Transportation, Office on Highway Safety
South Carolina	South Carolina Department of Public Safety (SCDPS), specifically the Office of Highway Safety, located within SCDPS.	SCDPS, Office of Highway Safety	Tami McDonell/ Emily, Thomas SCDPS, Office of Highway Safety	Tami McDonell, SCDPS, Office of Highway Safety	Tami McDonell, SCDPS, Office of Highway Safety
Vermont	Vermont State Police, County Sheriff departments, local law enforcement	Vermont Agency of Transportation (VAOT)	Mary Spicer, VAOT, and Stephen J. Reckers, Vermont Department of Public Safety	Stephen J. Reckers, Vermont Department of Public Safety	Stephen J. Reckers, Vermont Department of Public Safety
Virginia	Virginia Department of Motor Vehicles, Highway Safety Office	Virginia Department of Motor Vehicles, Highway Safety Office	Lam Phan, Department of Motor Vehicles, Highway Safety Office	Lam Phan, Department of Motor Vehicles, Highway Safety Office	Angelisa Jennings, Department of Motor Vehicles, Highway Safety Office

Note: U/A – Information unavailable.

Agencies interested in securing funding or assistance for traffic records system improvements, including equipment and training, should contact their state highway safety office (SHSO). Much of the Federal funding specifically aimed at traffic records improvements flows through the SHSOs which are required to administer a Traffic Records Coordinating Committee (TRCC), a statewide stakeholder committee which oversees the state's most critical traffic records data issues. SHSO coordinator contact information is provided in Table A.2. Additional SHSO information can be obtained at the Governors Highway Safety Association (GHSA) website (http://www.ghsa.org/html/links/shsos.html).

Table A.2 State Highway Safety Office Contact Information

State	SHSO Coordinator	State	SHSO Coordinator
Connecticut	Joseph Cristalli, Jr. Transportation Principal Safety Program Coordinator Department of Transportation, Transportation Safety Section 2800 Berlin Turnpike, P.O. Box 317546 Newington, CT 06131-7546 **Phone**: 860-594-2412 **Fax:** 860-594-2374 **Email:** joseph.cristalli@po.state.ct.us **Website:** http://www.ct.gov.dot	Delaware	Tricia Roberts, Director Office of Highway Safety P.O. Box 1321 Dover, DE 19903-1321 **Phone:** 302-744-2745 **Fax:** 302-739-5995 **Email:** tricia.roberts@state.de.us **Website:** www.ohs.delaware.gov
District of Columbia	Carole A. Lewis, Chief Transportation Safety Division, District Department of Transportation Frank D. Reeves Center, 2000 14th Street, NW – 7th Floor Washington, DC 20009 **Phone:** 202-671-0492 **Fax:** 202-671-0617 **Email:** carole.lewis@dc.gov **Website:** www.ddot.dc.gov	Maryland	Vernon F. Betkey, Jr., Director Maryland Highway Safety Office Maryland State Highway Administration 7491 Connelley Drive Hanover, MD 21076 **Phone:** 410-787-5824 **Fax:** 410-787-4020 **Email:** vbetkey@sha.state.md.us **Website:** www.marylandroads.com
Massachusetts	Sheila Burgess-Hill, Director Highway Safety Division, Office of Grants & Research Executive Office of Public Safety & Security 10 Park Plaza, Suite 3720, Boston, MA 02116 **Phone:** 617-725-3307 **Fax:** 617-725-0260 **Email:** sheila.burgess-hill@state.ma.us **Website:** www.mass.gov/highwaysafety	New Hampshire	Peter Thomson, Coordinator Highway Safety Agency 78 Regional Drive – Building 2 Concord, NH 03301-8530 **Phone:** 603-271-2131 **Fax:** 603-271-3790 **Email:** pthomson@nhhsa.state.nh.us **Website:** www.nh.gov/hsafety

State	SHSO Coordinator	State	SHSO Coordinator
New Jersey	Pam Fischer, Director Division of Highway Traffic Safety Department of Law & Public Safety P.O. Box 048 Trenton, NJ 08625-0048 **Phone:** 609-633-9272 **Fax:** 609-633-9020 **Email:** pam.fischer@lps.state.nj.us **Website:** www.nj.gov/oag.hts/index.html	New York	Chuck DeWeese, Assistant Commissioner Department of Motor Vehicles Governor's Traffic Safety Committee 6 Empire State Plaza, Room 414 Albany, NY 12228 **Phone:** 518-474-0972 **Fax:** 518-473-6946 **Email:** cdeweese@dmv.state.ny.us **Website:** www.nysgtsc.state.ny.us
North Carolina	Don Nail, Assistant Director Governors Highway Safety Program 215 East Lane Street Raleigh, NC 27601 **Phone:** 919-733-3083 **Fax:** 919-733-0604 **Email:** dnail@ncdot.gov **Website:** www.ncdot.org/programs/ghsp	Pennsylvania	Glenn C. Rowe, P.E., Acting Director Bureau of Highway Safety & Traffic Engineering Pennsylvania Department of Transportation P.O. Box 2047 Harrisburg, PA 17105-2047 **Phone:** 717-787-7350 **Fax:** 717-783-8012 **Email:** glrowe@state.pa.us **Website: w**ww.dot.state.pa.us/internet/bureaus/pdBHSTE.nsf
Rhode Island	Janis Loiselle, Administrator Office on Highway Safety Department of Transportation 2 Capitol Hill - Suite 106 Providence, RI 02903-1124 **Phone:** 401-222-3260 ext. 4436 **Fax:** 401-222-3942 **Email:** jloisell@dot.ri.gov **Website:** www.dot.state.ri.gov/programs/safety	South Carolina	Phil Riley, Director Office of Highway Safety Department of Public Safety P.O. Box 1993 Blythewood, SC 29016-1993 **Phone:** 803-896-9950 **Fax:** 803-896-9978 **Email:** philriley@scdps.net **Website:** www.scdps.org/ohs
Vermont	Jeanne Johnson, Coordinator Governor's Highway Safety Program Department of Public Safety 5 Park Row Waterbury, VT 05671-3201 **Phone:** 802-241-5501 **Fax:** 802-241-5558 **Email:** jejohnso@dps.state.vt.us **Website:** www.vthighwaysafety.com	Virginia	David Mitchell, Deputy Commissioner Virginia Highway Safety Office Department of Motor Vehicles P.O. Box 27412, 2300 West Broad Street Richmond, VA 23269 **Phone:** 804-367-8140 **Fax:** 804-367-6631 **Email:** david.mitchell@dmv.virginia.gov **Website:** www.dmv.state.va.us, www.dmvnow.com

B. State Planning Documents

The Strategic Highway Safety Plan (SHSP) and Traffic Records Strategic Plan are the two state planning documents which detail the state's most critical traffic records data issues and identify projects and initiatives the state is implementing to improve their traffic records systems. These documents were reviewed to identify the data-related strategies with the potential to impact state crash data collection and reporting. This information is summarized in Table B.1 and Table B.2.

Table B.1 Traffic Records Strategic Plan: Crash System Objectives

State	Traffic Records Strategic Plan
Connecticut	Convert the existing crash records system to a comprehensive, statewide system to serve the broader highway safety community by doing the following: Maintain plans to begin entering all reportable crashes in the Connecticut Department of Transportation (ConnDOT) AHF system starting with 2007 data. Begin entering the two thirds of the data elements now omitted. Complete plans to revise the crash form to include additional elements (such as cell phone usage) and to increase the level of compliance with the Model Minimum Uniform Crash Criteria (MMUCC). Implement the plan to electronically transfer reportable crashes from Connecticut State Police (CSP) to ConnDOT and to upgrade the data entry system for paper reports. Develop an XML schema as the statewide standard for uploading crash data to ConnDOT and use the CSP data transfer project as a pilot.
Delaware	Enter all crash reports (partial or complete) into the TraCS database by end of officer's shift. Enter all non-fatal crash reports into TraCS in entirety within 3 days of incident. Enter partial data for fatal crashes into TraCS within 3 days of a crash. Transfer "approved" TraCS data from Delaware State Police (DSP) to Delaware Department of Transportation (DelDOT) every 7 days. Complete edit checks and revisions to crash locations within 2 weeks following receipt of data from DSP. Expand TraCS to increase MMUCC compliance. Expand TraCS to include median crossover and run off the road crashes.

State	Traffic Records Strategic Plan
Delaware *(continued)*	Expand TraCS to increase compliance with FMCSA reporting requirements.
	Require TraCS users to complete all fields to improve completeness of crash data *(long term goal).*
	Provide training on the locator tool to increase accuracy of crash locations in TraCS.
	Allow various authorized users to access crash data for statistical analysis.
Florida	Facilitate the electronic transfer of crash data for the Florida Highway Patrol (FHP).
	Work with software vendors to facilitate the electronic submission of crash reports by local law enforcement agencies.
	Facilitate the development of a web-based system for local law enforcement agencies to submit crash reports to Florida Department of Highway Safety and Motor Vehicles (DHSMV).
	Develop standard interpretations of crash report data elements.
	Improve the instruction manual for the 2003 crash form.
	Revise the instruction manual for the new 2010 crash form.
	Evaluate data elements in terms of the investigating officer's ability to make the necessary evaluation.
	Offer crash report form training to law enforcement agencies related to improve accuracy and completeness, including information on commercial motor vehicle crashes.
	Update the crash report forms to include more MMUCC elements and attributes, including some required commercial motor vehicle elements not currently reported.
	Implement the revised crash report form.
	Facilitate the use of crash data in performance-based budgeting and program planning.
	Provide the expertise to develop methodology for locating crashes that take place off the state road system.
	Locate crashes off the state road system.
	Migrate the crash location system from TeleAtlas to the unified roadway base map.
Georgia	Complete beta testing the electronic submission of crash records, and publish the transmission specifications and all appropriate documentation to all law enforcement agencies (LEAs) and their vendors. Make this documentation available on the Georgia Department of Transportation (GDOT) website.
	Begin accepting crash records electronically to the Oracle database as soon as possible.
	Develop an outreach program to get as many LEAs as possible to report crash data electronically to the statewide crash file. Allowing electronic submission now can help reduce the timeframe for entry in the crash file dramatically and help make the crash data and the annual crash file available for analysis sooner.
	Reduce the timeframe for submission of crash reports to meet the statutory guidelines.

State	Traffic Records Strategic Plan
Maine	Create a single, comprehensive statewide crash file that serves as the basis for a traffic records data warehouse. This would eliminate the discrepancies between the two existing files and also eliminate the dissemination issues as it would be viewed as the official crash file.
	Expand the capabilities of the back-end report function to allow more web-based ad hoc query capability by user agencies.
	Pursue ongoing training efforts beyond academy-based training to address the problem areas of the crash report so as to minimize errors and maintain the quality of the crash file.
	Reevaluate the decision to exclude non-reportable crashes and continue to keep the special logging road crash reports in the crash file so the entire crash experience of the state can be evaluated.
	Task the TRCC to be involved in the migration of the crash file software platform to the .NET framework.
Maryland	Improve the timeliness of the crash system as measured in terms of an increase of:
	Percent of electronic reports submitted to Maryland State Police (MSP) Central records within 24 hours.
	Percentage of crash records reported to FMCSA within 90 days over a 12-month period.
	Improve the timeliness of the crash system as measured in terms of a decrease of:
	Number of days for close of annual crash data reporting file.
	Improve the completeness of the crash system as measured in terms of an increase of:
	Total number of electronically collected crash reports using web-based GPS system for location.
	Obtain update of most recent calendar year's datasets (police crash report, hospital/emergency room record, EMS, citation, licensing, registration, toxicology data).
	Percent of records with complete vehicle information.
	Percent of records with complete vehicle information (Vehicle Identification fields in State Motor Carrier Division crash database).
	Percentage of crash reports submitted to Central Records and entered into eMAARS that are 100% MMUCC-compliant.
	Improve the completeness of the crash system as measured in terms of a decrease of:
	Percentage of eligible drivers with blanks/unknown in the BAC field.
	Improve the accessibility of the crash system as measured in terms of an increase of:
	Percentage of satisfaction with CODES Data Request Form based on survey.
Massachusetts	Expand the mission and participation for guiding improvements to Massachusetts' traffic records system.
	Evolve the Traffic Records Coordinating Committee (TRCC) into a two-level organization for strategic planning and standards setting with broad representation from all stakeholders.
	Build an organizational structure to include representation from all stakeholders to serve as the TRCC.
	Conduct a Massachusetts traffic records and safety forum.

State	Traffic Records Strategic Plan
Massachusetts *(continued)*	Improve the quality, accessibility, and usefulness of traffic records data. Establish a comprehensive data quality management process. Develop Standard data sets and data definitions. Expand the data warehouse. Promote improved acquisition, migration, and access to existing information for all users. Develop a comprehensive functional definition or model for the desired system. Expand capabilities of users and analytic support tools. Implement centralized storage/access to roadway, EMS, and trauma data with links to crash information. Promote technology to allow data entry close to the point of origin and electronic transfer to central files.
New Jersey	Improve process for submitting crash reports. Reduce time from when crashes occur to receipt of crash data. Expand electronic collection of data at the scene. Implement Electronic Data Transfer from police departments to state police to the New Jersey Department of Transportation (NJDOT). Integrate driver, vehicle, and roadway data. Revise the New Jersey crash report (NJTR-1). Integrate GIS/GPS into all traffic records applications. Modify NJDOT Crash Records website to be more user friendly. Create a directory of information sources.
South Carolina	Improve collection and management of core traffic records data systems. Implement state-of-the-art electronic field data collection for law enforcement statewide to improve timeliness, accuracy, completeness, accessibility, consistency, and data integration. Improve traffic records data integration, access, and analysis. Support electronic data sharing. Improve access to data and analytic resources. Improve management and coordination of traffic records system improvements. Implement user-support tools and resources for the TRCC and others in the traffic safety community.

State	Traffic Records Strategic Plan
Vermont	Establish Electronic Reporting System.
	Establish web-based interface module for the electronic crash repository.
	Upgrade Public Safety Spillman System to better interface with the electronic crash repository and other systems (DMV and Judicial Bureau).
	Develop crash data interface for all Vermont police departments' records management systems.
	Establish an interface between Burlington's CAD/RMS system (New World) and the Crash Repository.
	Develop crash data interface for remaining local Vermont police departments' records management systems.
	Develop a crash system interface with the Department of Motor Vehicles and SafetyNet systems.
	Implement Geographic Positioning System location protocol.
	Develop analytical reporting capability for law enforcement agencies.
	Establish statewide Mobile Data Collection.
	Identify and implement modernization upgrades to Department of Motor Vehicles.
	Revise Operator Report Form required by the Department of Motor Vehicles.
	Implement an Emergency Medical Service uniform electronic data system.
	Maintain the Crash Reporting System database currently used by the Agency of Transportation as the centerpiece of the electronic crash reporting system.
	Establish a formal data quality control process for crash reports to include measurements of timeliness, completeness, and accuracy.
	Develop links from the Crash Repository to all law enforcement systems (e.g. Department of Public Safety, Safetynet, VIBRS, CAD systems), to include a link and notification to the Fatal Analysis and Reporting System analyst.
	Develop a link between the Crash Reporting System and the Driver Improvement and Commercial Vehicle Enforcement records at the Department of Motor Vehicles.
	Develop a link between the Crash Reporting System and Agency of Transportation roadway inventory.
	Create an electronic link between the Crash Reporting System and the Emergency Medical Services reporting system.
	Participate in National Highway Safety Administration (NHTSA) Crash Outcome Data Evaluation System (CODES).
	Develop a crash data internet site with queriable analysis capability and different levels of access (e.g. police, analysts, legislators, policy developers, public.)
Virginia	Streamline the CAP Work Center process to reduce the data entry backlog of crash reports and correct errors in system.
	Add overtime hours to reduce backlog.
	Add edit checks to database to automatically alert data entry specialist if incorrect information has been keyed.

State	Traffic Records Strategic Plan
Virginia *(continued)*	Develop a Traffic Records Electronic Data System (TREDS), in partnership with VDOT, DMV, and VSP. Design a state-of-the-art traffic records management system that is capable of the features necessary to support the highway safety data business needs of all stakeholders. Design the TREDS project to meet the needs and requirements of users to include the following: Streamline and simplify data collection for law enforcement. Increase efficiency and data quality by use of automated edit checks. Provide the ability to process crash reports electronically. Provide electronic submission of reports to DMV. Eliminate data entry by multiple agencies to the same report. Eliminate manual data entry and backlog of reports. Design flexible architecture to address different analysis needs. Provide more robust and accessible reporting capabilities. Provide a map interface. Design the TREDS Project to capture and improve information on all commercial vehicles (statewide) involved in crashes and upload to federal SafetyNet database at VSP. Conduct an analysis of Virginia's crash form and database. Identify missing MMUCC data elements and add them to the Virginia crash report and crash database as necessary.

Table B.2 Strategic Highway Safety Plan: Data-Related Strategies

State	Strategic Highway Safety Plan
Connecticut	Promote standardized reporting of motor vehicle crash data in the state. Complete data element capture from the PR-1 crash report for all roadways, including non-injury property damage only crashes on local roads.
	Coordinate and promote GIS/GPS technologies, base map development and sharing of geospatial information for location referencing of motor vehicle crash, citation, EMS response, and other highway traffic safety related events.
	Implement an electronic PR-1/XML crash reporting standard for agencies to use in submitting their crash data in a standard electronic format.
	Establish a traffic records/crash data warehouse to provide a complete system for data storage, access, and analysis of motor vehicle traffic crash and related traffic records data for all involved stakeholders.
	Join and participate in the Driver License Agreement (DLA).
	Promote a train-the-trainer crash report training workshop involving crash records, highway safety, research, and law enforcement to reinforce the importance of capturing timely and accurate safety event data.
	Implement an electronic EMS run reporting system to collect data on every 911 call, focusing on National EMS Information System (NEMSIS) data element requirements.
Delaware	Develop an integrated traffic crash data collection system to increase accuracy, uniformity, completeness, integration, accessibility, and timeliness.
	Create query tools.
	Continue linkage of crash, hospital discharge, and EMS data through CODES.
	Promote public use and accessibility of traffic crash data.
	Integrate data systems.
District of Columbia	Improve quality of safety data by establishing programs for quality assurance, incentives, and accountability.
	Provide managers and users of highway safety information with resources for effective use of data.
	Establish means to coordinate collection, management, and use of highway safety information among all.
	Establish group of highway safety professionals trained in analytical methods for evaluating safety information.
	Establish/Promote technical standards for HSIS that are critical to operating effective SMS programs.
	Establish ongoing performance measurement system to evaluate cost-effectiveness of safety investments.
Florida	Improve coordination among data collection agencies to promote an integrated statewide traffic records data system.
	Increase the number of law enforcement agencies using TraCS, an electronic data collection system for use in reporting traffic crash information.
	Increase use of geographic information systems (GIS) capabilities for plotting crash location data.
	Promote availability and utilization of electronic crash data from the DHSMV, printable crash reports, geographic information system (GIS) mapping and analysis tools, and crash-typing software.

State	Strategic Highway Safety Plan
Florida *(continued)*	Provide training on data analysis, e.g. turning data into useful information.
	Provide web access to appropriate data and analyses for the media and the public.
	Improve timeliness and accuracy of data collection, analysis processes, and systems including the linkage of crash, roadway, driver, medical, CODES, enforcement, conviction, homeland security data, etc.
	Implement TraCS and other compatible electronic systems for the collection of data.
	Expand the local agencies' roles and resources to improve safety data.
	Improve and expand the warehousing and accessibility of safety data.
	Continually update data definitions in accordance with Model Minimum Uniform Crash Criteria (MMUCC).
Georgia	Implement the "Strategic Plan for Traffic Records Improvement" included within the "State Traffic Safety Information System Improvement Grant".
	Complete the electronic crash reporting network connection.
	Georgia Traffic Records Coordinating Committee facilitates the automation of specific traffic records system components and processes, with priority being given to crash and citation record systems.
	A full time Georgia Traffic Records Coordinator provides guidance and leadership in the Strategic Plan implementation.
	Promote and support appropriate technology and research initiatives related to highway safety and traffic records in Georgia.
	Support CODES, which links traffic records to allow in-depth analysis.
Maine	Review data tracking systems to ensure that relevant data are collected and interpreted.
Maryland	Develop infrastructure and policies that increase appropriate access to timely, accurate, and complete highway safety-related data.
	Develop an impaired tracking system through citation, disposition, and treatment.
	Revise the policy and crash analysis system to identify hazardous locations and identify appropriate safety improvements on all public roads.
	Develop a uniform, standardized crash reporting threshold requirement that more adequately addresses safety needs and improvements.
	Develop systems to identify, assess, and evaluate roadway elements, intersections, spots, sections, corridors, and routes on all road systems (including rural roads) that exhibit abnormal numbers and/or rates of crashes.
Massachusetts	Outreach to Local and State Police (regarding completeness of crash report form).
	Police Training on Crash and Citation Reporting.
	Massachusetts Ambulance Trip Record Information System (MATRIS) and Statewide Trauma Registry.
	Increase electronic submission to the Crash Data System.
	Commonwealth-wide process for sharing data.
	Standard Massachusetts Highway Safety Data Reports.
	Support activities to improve data collection procedures and data quality, including the use of electronic license swiping equipment for police officers.

State	Strategic Highway Safety Plan
New Hampshire	Conduct a NHTSA high-level deficiency evaluation of NH traffic record systems.
	Enhance traffic crash data collection items: DMV Traffic Accident Report, Form DSMV-159, DSMV-160, and DSMV-161.
	Conduct traffic records assessment.
	Continue support for the development and implementation of the Crash Record Management System (CRMS) project and planned phases.
	Link crash and medical outcome data sets to develop an integrated data system to facilitate population-based outcome measurements, geographic comparisons, trend analysis, and research.
	Begin analysis of partial data sets for incorporation into commonly prepared plans, studies, and outreach materials.
	Develop and conduct crash data collection training.
	Develop centralized traffic record data repository (traffic record data warehouse).
New Jersey	Expansion of Pilot Emergency Medical Services Electronic Patient Care Reporting System.
	EMS Electronic Patient Care Reporting System for EMS Volunteers Co-location of Fatal Data Units.
	Integration of EMS and Crash Records Data.
	GPS Unit acquisition for Police Departments.
	Vehicle Identification Number (VIN) Validation Program.
	Blood Alcohol Count (BAC) Export Program.
New York	Continue the expansion of TraCS to police agencies and courts throughout New York State to improve the timeliness and accuracy of crash, ticket, and disposition data in the state's traffic records systems.
	Implement enhancements to the Accident Information System to improve the availability of timely, accurate, and complete crash data.
	Code non-reportable property damage crashes not currently captured by the AIS to improve the completeness and timeliness of the crash data available for use in identifying and analyzing high crash locations.
	Enhance the Traffic Safety Law Enforcement and Disposition (TSLED) system by automating additional types of transactions.
	Expand access to the Driver's License file and implement improvements to increase the accuracy, completeness, and timeliness of the driver information available in the file.
North Carolina	No SHSP Strategies related to data.
Pennsylvania	Increase the electronic submission of crash records input by partners.
	Implement a program for improving the quality of police prepared data.
	Increase the capabilities and capacity in data analysis and statistical evaluation for improving quality and timeliness of crash reports.
	Improve reliability and accessibility of local road crash information.
	Implement top 3 recommendations of NHTSA records assessment: 1) Establish active TRCC, 2) Develop strategic plan for crash data improvement, and 3) Implement crash data quality control program.
	Improve data accessibility by partners and data users (CDART) Prophecy, CODES, etc.

State	Strategic Highway Safety Plan
Rhode Island	Improve the collection and analysis of data related to safety belt use.
	Improve the collection of speed and aggressive driving-related data.
	Develop a method to collect speed and aggressive driving-related data from crash reconstruction reports for fatal and serious injury crashes and forward data to RIDOT.
South Carolina	Improve location coding for all rural roads and residential streets.
	Improve query abilities on existing systems.
	Pursue and complete the integration of crash data into ITMS so it can be graphically represented for statewide, regional, and metropolitan planning purposes.
	Implement a continuously operating help desk to accommodate law enforcement personnel in crash reporting.
	Implement electronic data capture.
	Refine and expand automated GPS Collision location captures.
	Implement a project to append road inventory data to each crash record.
	Improve the quality and timeliness of crash data.
	Continue rollout phase of South Carolina Collision and Ticket Tracking System (SCCATTS).
	Develop system capabilities to share violation and suspension information among jurisdictions according to DLA Standards.
	Implement all system requirements for MCSIA.
	Implement electronic interface with SC court for transmission of CDL and CMV violations.
Vermont	Implement local program for identifying and prioritizing high crash locations.
Virginia	Realign the TRCC to have a more multidisciplinary membership.
	Adopt a state traffic safety information systems strategic plan through TRCC with implementation of the Traffic Records Electronic Data System (TREDS) project as a cornerstone.
	Adopt the National Agenda for improvement of highway safety information systems.
	Capture data elements related to large truck deaths.
	Capture crash injury outcomes using CODES to link statewide traffic records with injury outcome data and support highway safety decision making at all levels.
	Automate the FARS data available online and from DMV.

C. Crash Reporting Requirements and Data Sharing Agreements

Table C.1 State Minimum Reporting Thresholds and Reporting Requirements

State	Minimum Reporting Thresholds	Crash Reporting Requirements
Connecticut	$1,000+ property damage	Section 14-108a of the Connecticut Motor Vehicle Laws, requires any police officer, agency or individual that investigates a reportable motor vehicle crash to forward one copy of the police crash report to ConnDOT upon completion of the investigation. The state has a single report form, Connecticut Uniform Police Accident Report, Form PR-1 (revised 12/1994).
Delaware	$1,500+ property damage	Section 4203 (d) of the Delaware Laws, Title 21, requires that the driver of any vehicle which is involved in a vehicular collision must immediately report the collision to the police agency in the jurisdiction where the crash occurred if the collision included any of the following: injury or death to any person, the collision occurred on public property and resulted in property damage in excess of $500 or more, or the collision appeared to involve a driver whose physical ability was impaired by alcohol and/or drugs. Police agencies are to investigate the collision and complete the State of Delaware Uniform Traffic Collision Report (UTCR, revised 1987) form supplied by the Delaware Department of Safety and Homeland Security. Delaware police agencies report crashes electronically to the Delaware Department of Safety and Homeland Security. All agencies use the same crash reporting requirements. This statute does not stipulate a time requirement for report submission.
District of Columbia	$250+ property damage	
Florida	Alcohol involvement, or leaving the scene	Section 316.068(2) of the Florida Statues, stipulates that every crash report required to be made in writing must be made on the appropriate form approved by the Department of Highway Safety and Motor Vehicles. The state has two forms, the Florida Traffic Crash Report – Long Form HSMV-9003 (revised 01/2002) and Law Enforcement Short Form Report HSMV-90006 (revised 03/2002).
Georgia	$500+ property damage	Section 40-6-278 of the Official Code of Georgia, establishes the Department of Transportation as the agency officially responsible for collecting and maintaining crash data. The GDOT Commissioner has the authority to prescribe the rules and procedures for crash data collection which are used by all state, county, or municipal police officers. The form used by police is the Georgia Uniform Motor Vehicle Accident Report (12/2003).

State	Minimum Reporting Thresholds	Crash Reporting Requirements
Maine	$1,000+ property damage	Section 2251(a) of the Maine Revised Statutes, requires the Chief of the State Police to prepare and supply forms and approve the format for electronic submission for crash reports. Police Traffic Accident Report Form 13:20A (revised 04/1997) is the crash report form used in Maine. The state's reporting requirements are currently being redefined and slated for a second quarter release of the new Maine Crash Reporting Form. This form revision is a result of a TRCC initiated multi-agency working group where input was received from state and local law enforcement, Maine Bureau of Highway Safety, Maine DOT, Maine EMS, and Maine Bureau of Motor Vehicles.
Maryland	Immobilizing property damage, or citizen demand	State of Maryland Motor Vehicle Accident Report (MSP Form#1, 01/1993) is currently being used although a new draft form dated 05/2009 has been submitted to NHTSA for review. Section 20-113(b) of the Maryland Code requires reports to be made on appropriate forms and states that each written crash report must be made on the form required by the Motor Vehicle Administration. Maryland Public Safety Section 2-306 (http://law.justia.com/maryland/codes/gps/2-306.html) gives the authority to the Secretary of the Department of State Police.
Massachusetts	$1,000+ property damage	Massachusetts General Law Chapter 90, Section 26 requires every person operating a motor vehicle which is involved in a crash in which any person is killed or injured or in which there is damage in excess of $1,000 to any one vehicle or other property to submit a written report to the Registrar of Motor Vehicles (RMV), within five days after the crash. A copy of the report must be sent to the law enforcement agency in the jurisdiction where the crash occurred. Law enforcement agencies are required to notify the RMV of the crash in their jurisdiction within fifteen days, in a form prescribed by the RMV. However, there is no penalty for non-reporting by law enforcement agencies. The Motor Vehicle Crash Operator Report (CRA-23, revised 2005) is the RMV form used to report crashes in the state. The data collected must be shared with Mass Highway.
New Hampshire	$1,000+ property damage	Section 264:26 of the New Hampshire Statutes stipulates that the commissioner shall prescribe a "uniform police investigation report of accident" in the form prescribed by the New Hampshire Department of Safety. The form used is Motor Vehicle Accident Report DSMV 400 (revised 12/1996). This statute does not stipulate a time requirement for report submission to the state.
New Jersey	$500+ property damage	New Jersey Statutes Annotated 39:4-131 states an officer investigating a crash must submit a completed report within five days after investigation of the crash to the Motor Vehicle Commission. The New Jersey Police Crash Investigation Report (NJTR-1, revised 01/2006) is furnished by the Motor Vehicle Services.
New York	$1,000+ property damage	Statutory requirements for crash reporting are identified in Section 605 of New York's Vehicle and Traffic Law. All drivers involved in the crash are required to file a Report of Motor Vehicle Accident (form MV-104) with the DMV no more than 10 days after the crash if the property damage of any person is $1,001 or more. If a person is injured or killed, drivers are required to immediately notify the police and all drivers involved in the crash and the police must file form MV-104 which is available for print and online. Failure to report a crash is a misdemeanor for the drivers; but there is no penalty for law enforcement.

State	Minimum Reporting Thresholds	Crash Reporting Requirements
North Carolina	$1,000+ property damage	North Carolina General Statute 20-166.1 requires the Division of Motor Vehicles to provide forms or procedures for submitting crash data and approves the format for the crash report. Crash Form DMV-349 (revised 2000) is used by all law enforcement agencies to report motor vehicle crashes. The statute also requires that the investigating agency submit the report to the Division within 10 days after the investigation of the crash is completed. A violation of any provision of Section 20-166.1 is a misdemeanor.
Pennsylvania	Immobilizing damage	Section 3751 of Title 75, Pennsylvania's Consolidated Statutes (Vehicle Code) requires police agencies to investigate all crashes involving death, injury, and/or towable damage to any one vehicle. The investigating agency must report the crash within 15 days to the Department of Transportation on the Commonwealth of Pennsylvania Police Crash Report Form (AA-500, revised 2004) which is designed and supplied by the Department and available in paper or two electronic formats.
Rhode Island	$500+ property damage	Effective January 1, 2003, Section 31-26-9 of the State of Rhode Island General Laws, Title 31, requires law enforcement officers to submit crash reports electronically to the Rhode Island Accident Data Export Manager over the Rhode Island Law Enforcement Telecommunication System (RILETS). The State of Rhode Island Uniform Crash Report must be submitted to the department of transportation within fourteen days of the investigation or preparing the report. Any person convicted of failing to make a report as required in this chapter shall be convicted of a civil violation of the chapters shall be punished by a fine of not more than five hundred dollars ($500) as provided in Section 31-27-13.
South Carolina	$1,000+ property damage	Section 56-5-1270 of the South Carolina Code of Laws, requires law enforcement officers who investigate motor vehicle crashes to forward the written report to the Department of Motor Vehicle within 24 hours after completing the investigation. Section 56-5-1300 requires the Department of Public Safety to prepare and supply the crash report forms to law enforcement agencies. Traffic Collision Report Form (TR-310, revised 1/2001) is the form used by Law Enforcement in South Carolina.
Vermont	$1,000+ property damage	Under Section 1016 of the Vermont Statues Annotated, Title 23, copies of completed crash investigations must be forwarded to the Vermont Department of Motor Vehicles within 30 days after the crash is investigated. State of Vermont Uniform Crash Report (revised 06/2005) is used by law enforcement to report crashes; both written and electronic reports are accepted.
Virginia	$1,500+ property damage	Section 46.2-373 of the Code of Virginia requires every law enforcement officer who in the course of duty investigates a motor vehicle crash resulting in injury to or death of any person or total property damage to an apparent extent of $1,500 or more, either at the time of and at the scene of the crash or thereafter and elsewhere, by interviewing participants or witnesses shall, within twenty-four hours after completing the investigation, forward a written report of the crash to the Department. The report shall include the name or names of the insurance carrier or of the insurance agent of the automobile liability policy on each vehicle involved in the crash.

Table C.2 Data Sharing Agreements

State	Data Sharing Agreements
Connecticut	The Connecticut State Police has a data sharing agreement with 10 local agencies for crash data.
Georgia	There have been efforts over the years to create a data warehouse for the State of Georgia, but without a mandate from higher up (i.e. the Legislature or Governor); these efforts have fallen apart due to disputes over ownership. Citation and driver's license information are owned by the Georgia Department of Driver Services and law prevents them from readily sharing this information with other state agencies. While Georgia Department of Transportation (GDOT) does have an incident response database for its Highway Emergency Response units, this data is limited to the metro Atlanta area at this time.
Maine	The Maine State Crash Reporting System database has interfaces to the Bureau of Motor Vehicles system that exports crash data including driver and insurance information. The database has interfaces to the Maine Department of Transportation Crash Analysis System which is linked to the roadway system.
Maryland	Maryland is a CODES state, CODES is run by the University of Maryland National Study Center for Trauma and EMS and they have agreements with MVA, Central Records, Hospitals, Medical Examiner, Courts, etc. for data sharing and analysis (a de facto data warehouse).
Massachusetts	The crash database is linked to driver's licenses information. The database is able to validate license information for instate drivers. Data must be shared with the Massachusetts Highway Department.
New Hampshire	New York State Department of Motor Vehicles (NYSDMV) has data sharing MOUs with various traffic safety organizations, the New York State Department of Health, and the New York State Department of Transportation. NYSDMV also does geo-locating of crashes through a multi-agency agreement for NYSDOT.
South Carolina	South Carolina Department of Motor Vehicle (SCDMV) is the agency responsible for updating driver records based on citations. Currently the SCDMV Office of Highway Safety (OHS) is not linked to the state's judicial or emergency response (South Carolina Department of Health and Environmental Control (DHEC)) departments. However, the link between SCDMV, OHS, DHEC and the Court's system is part of the South Carolina Collision and Ticket Tracking System (SCCATTS) project.
Virginia	Virginia DMV Highway Safety Office, through its Traffic Record Electronic Data System (TREDS), has data sharing agreements with DMV driver division, Virginia State Police, Emergency Medical Services, Supreme Court of Virginia, NHTSA (federal FARS), FMCSA, CODES, Medical Examiner, Department of Transportation, and Virginia Community College System for motorcycle student training information.

D. Model Minimum Uniform Crash Criteria

The Model Minimum Uniform Crash Criteria (MMUCC) recommends voluntary implementation of a minimum set of standardized data elements to promote comparability of data within the highway safety community and help states collect consistent crash data for a wide range of traffic safety planning applications. The MMUCC Guideline was developed in 1998 and has been updated every five years, with the third version (MMUCC 3.0) released in 2008.

The four main categories of MMUCC data describe the characteristics of the crash, vehicle(s), person(s), and roadway involved. Crash data elements identify the date, time, location, first and most harmful events weather condition, light condition, and type of intersection related to the crash. Vehicle data include elements such as the vehicle identification number, make, model, model year, type, function, actions, impact, sequence of events, and damaged areas. Person data elements capture age, sex, injury status and type for all involved persons, in addition to driver status and non-motorist status information, alcohol and drug involvement for all drivers and non-motorists. Person data describing the vehicle number, seating position, use of safety equipment is also collected for all vehicle occupants. Roadway data elements include roadway curvature, grade, widths of lane(s) and shoulder(s), roadway lighting, and traffic control type at intersection, among others.

To reduce the burden on law enforcement not all MMUCC data elements are collected at the scene of the crash. Some data elements can be derived by converting data collected into new information. As an example, a database can convert a driver's birth date collected at the scene to the driver's age at the time of the crash. In MMUCC 3.0, ten MMUCC data elements are derived from the 75 data elements collected on the crash report at the crash scene. An additional 22 elements such as driver license status, injury description, and roadway functional class can be obtained after linkage to driver history, injury, and roadway inventory databases (in comparison, MMUCC 2.0 recommended 111 elements in the crash database, with ten derived elements and 24 linked elements; the data elements were updated to reflect new data elements relevant to emerging highway safety issues).

MMUCC Data Elements: Collected at the Scene

Crash Data Elements

- Case Identifier
- Crash Data and Time
- Crash County
- Crash City/Place
- Crash Location
- First Harmful Event
- Location of First Harmful Event Relative to the Trafficway
- Manner of Crash/Collision Impact
- Source of Information
- Weather Conditions
- Light Condition
- Roadway Surface Condition
- Contributing Circumstances

Vehicle Data Elements

- Motor Vehicle Identification Number
- Motor Vehicle Type and Unit Number
- Motor Vehicle Registration State and Year
- Motor Vehicle License Plate Number
- Motor Vehicle Make
- Motor Vehicle Model Year
- Motor Vehicle Model
- Motor Vehicle Body Type Category
- Total Occupants in Motor Vehicle
- Special Function of Motor Vehicle in Transport
- Emergency Motor Vehicle Use
- Motor Vehicle Posted/Statutory Speed Limit
- Direction of Travel Before Crash
- Trafficway Description
- Total Lanes in Roadway
- Roadway Alignment and Grade
- Traffic Control Device Type
- Motor Vehicle Maneuver/Action
- Areas of Impact
- Sequence of Events
- Most Harmful Event for this Motor Vehicle
- Bus Use
- Hit and Run
- Extent of Damage/Removal
- Contributing Circumstances, Motor Vehicle
- Motor Carrier Identification
- Gross Vehicle Weight Rating/Gross Combination Weight Rating
- Vehicle Configuration
- Cargo Body Type
- Hazardous Materials (Cargo Only)

Person Data Elements

Level 1: All Persons Involved

- Date of Birth
- Sex
- Person Type
- Injury Status

Level 2: All Occupants

- Occupant's Motor Vehicle Unit Number
- Seating Position
- Restraint Systems/Helmet Use
- Air Bag Deployed
- Ejection

Level 3: All Drivers

- Driver License Jurisdiction
- Driver License Number, Class, CDL and Endorsements
- Driver Name
- Driver Actions at Time of Crash
- Violation Codes
- Driver Distracted By
- Condition at Time of Crash

Level 4: All Drivers and Non-Motorists

- Law Enforcement Suspects Alcohol Use
- Alcohol Test
- Law Enforcement Suspects Drug Use
- Drug Test

Level 5: Non-Motorists

- Non-Motorist Number
- Non-Motorist Action/Circumstance Prior to Crash
- Non-Motorist Actions/Circumstances at Time of Crash
- Non-Motorist Location at Time of Crash
- Non-Motorist Safety Equipment
- Unit Number of Motor Vehicle Striking Non-Motorist
- Transported to Medical Facility By Derived from Collected Data
- Age

MMUCC Data Elements: Derived from Collected Data/Obtained After Linkage to Other Data

Crash Data Elements

- Crash Severity
- Number of Motor Vehicles Involved
- Number of Motorists
- Number of Non-Motorists
- Number of Non-Fatally Injured Persons
- Number of Fatalities
- Alcohol Involvement
- Drug Involvement
- Day of Week

Person Data Elements

Level 3: All Drivers

- Driver License Restrictions
- Driver License Status
- Drug Test Result

Level 6: All Injured Persons

- Injury Area
- Injury Description

Roadway Data Elements

- Bridge/Structure Identification Number
- Roadway Curvature
- Grade
- Part of National Highway System
- Roadway Functional Class
- Annual Average Daily Traffic
- Widths of the Lane(s) and Shoulder(s)
- Width of Median
- Access Control
- Railway Crossing ID
- Roadway Lighting
- Pavement Markings, Longitudinal
- Presence/Type of Bicycle Facility
- Traffic Control Type at Intersection
- Mainline Number of Lanes at Intersection
- Side-Road Number of Lanes at Intersection
- Total Volume of Entering Vehicles

E. Training

Table E.1 Crash Data Collection and Reporting Training

State	Type of Training Offered	Target Audience	Training Agency	Instructor Requirements
Connecticut	Crash report form and crash investigation	New law enforcement recruits	Police academy - state police	Sworn member of law enforcement
Delaware	Introductory course on TraCS	Law enforcement	Police academy - state police	Officers with intense crash investigation experience who have served on crash reconstruction units - fatal crashes
Florida	Crash form completion – fields and rules	Law enforcement	Individual law enforcement agencies and Institute of Police Technology & Management	NR
Georgia	Introduction to crash form completion, electronic field based reporting tool	Law enforcement	Georgia Public Safety Training Center	NR
Maine	40 hours of basic crash investigation offered biannually at law enforcement academy	Law enforcement	Maine State Police Traffic Safety Unit	Certified crash reconstruction specialists
Maryland	Crash report form and crash investigation	Entry level law enforcement	Police academy	Certified by Maryland Police and Correctional Training Commission (MPCTC)
Massachusetts	Crash report form and crash investigation	Law enforcement	Local jurisdictions	Law enforcement officer
New Jersey	NJTR-1 crash form, crash investigation, and Federal Motor Carrier Training	Law enforcement	State university (includes e-learning) and police academies	NR

State	Type of Training Offered	Target Audience	Training Agency	Instructor Requirements
New York	Mail sorting and scanning, indexing of information needed to identify and locate report in AIS, matching of reports on same crash (police and motorist), conversion of key data elements for entry in AIS, and location coding.	DMV employees	DMV	Supervisors with appropriate program and system knowledge
	Training and support of TraCS	State and local police	State police	NR
North Carolina	DMV 349 crash report form and electronic crash reporting	Law enforcement agencies and state highway patrol	DMV, state highway patrol, community colleges, local agencies (internal training)	NR
Pennsylvania	Classroom training is provided by the State's six law enforcement liaisons in Police Crash Reporting	All local police that request it	North Central Highway Safety Network	The instructors must be employees of the Safety Network
South Carolina	Crash report completion	Law enforcement officers	South Carolina Criminal Justice Academy	NR
Vermont	Crash report form and use of the electronic web crash application, including data entry, record search, and query tools.	All law enforcement statewide	Vermont Agency of Transportation	Knowledge of crash application use and familiarity with the crash form and requirements
Virginia	Basics of crash report completion, law enforcement back end work flow, reporting, and analytics are taught at law enforcement academies, online training through web-based videos, and one-on-one sessions. Virginia State Police provides troopers specialized crash reconstruction. Additional training: automated crash report and crash diagram; Basic & Advance and Motorcycle Crash Reconstruction; Human Factors in Crash Reconstruction; Special Topics/Crash Reconstruction Refresher; Crash Analysis focusing on the strategic use of crash records data; Annual Traffic Records Conference.	Virginia State Police, local Law Enforcement, highway safety officials and other authorized users.	Law enforcement academies, Transportation Safety Training Center (TSTC) at Virginia Commonwealth University, and Virginia Highway Safety Office at DMV.	Trainers and subject matter experts in the field with advanced knowledge of full TREDS crash collection and reporting application.

Note: NR – None reported.

F. Crash Data Collection and Reporting Technology

Crash Data Collection Technology

A variety of electronic crash systems are currently utilized throughout the Coalition States. Some states have vendor-built systems, while others have developed systems in-house. Table F.1 provides an inventory of crash data collection technology used by the Coalition States, including whether the crash system is paper-based or electronic; technology used for identifying crash locations; the type of systems used for data entry into the law enforcement agency crash system; and subsequent submittal of crash data/reports to the state crash data repository.

Table F.1 Technology Used to Collect Crash Data

State	Crash Data System	Technology Used to Identify Crash Locations	Single Police Accident Report (PAR) Used by the State and All County/Local Jurisdictions	Crash Data Collection Software Provided to Police Agencies	Database Used for the Master Crash Data
Connecticut	The Connecticut State Police (CSP) currently uses both paper and electronic reporting; however, with the recent passing of signature, CSP anticipates transitioning to totally electronic.	Crash locations are captured at the scene by trunk modems in the officer cruisers.	NR	CAPTAINs, NexGen (RMS)	Oracle Database
Delaware	The state is currently using an electronic system, TraCS. However, in early 2010 a new E-Crash system will be initiated.	The state uses a locator tool which pinpoints location by latitude/longitude coordinates and GIS mapping.	Yes	TraCS	NR
Florida	The crash data system is a combination of paper and electronic. For collection of crash data, the technology and software utilized is determined by each law enforcement agency. For maintenance and distribution of crash data, the technology and software utilized is Oracle and open source with custom code.	GPS is not currently used to record location data. However, the Department is in the process of implementing a new crash form. This new form will utilize GPS when available.	NR	NR	Oracle Database

State	Crash Data System	Technology Used to Identify Crash Locations	Single Police Accident Report (PAR) Used by the State and All County/Local Jurisdictions	Crash Data Collection Software Provided to Police Agencies	Database Used for the Master Crash Data
Georgia	Georgia uses a combination of both paper and electronic crash systems. GDOT completed modernization of its crash repository in 2009 so as to allow the receipt of electronic crash data, including publishing an extensive listing of data validation rules/edits and a XML transfer.	While some law enforcement agencies do utilize GPS for locating crashes, the most effective method observed and utilized by GDOT is a map-based location tool using GDOT's base maps. This ensures GDOT engineers are able to link data within GDOT's Roadway Characteristics file.	Yes	TraCS	IBM DB2
Maine	100 percent of crashes submitted to the state repository are submitted electronically. The Maine Crash Reporting System is comprised of a state Oracle database with an import service that collects data from local agencies. The state database has web and client based report tools. Maine is developing a major upgrade to the Maine Crash Reporting System that will use Microsoft.NET technologies and incorporate the newly revised 2010 Maine Crash Report form. Approximately 70% of the crashes reported in Maine are collected with the Maine Crash Reporting System. The remaining 30% are collected using local law enforcement records management system that exports data and is imported into the Maine Crash Reporting System.	GPS is not currently used for locating crashes. The Maine Crash Reporting System uses GIS maps where the officer clicks on the map to indicate crash location. This location is recorded as links and nodes in the electronic crash report that directly locates the crash on the roadway.	Yes	State-developed crash reporting software is provided to law enforcement agencies and third party Records Management System.	Oracle Database
Maryland	Maryland's crash data system is paper based, but a few counties and several Maryland State Police (MSP) barracks collect electronically; however, the MSP Central Records Division (CRD) only accepts paper at this time. Acceptance of electronic data will be in development in the next few months.	GPS is used by the MSP with electronic citations. It is assumed that some counties do collect GPS on scene but CRD does not accept this data at the present time.	Yes	None	Oracle 11g Database

State	Crash Data System	Technology Used to Identify Crash Locations	Single Police Accident Report (PAR) Used by the State and All County/Local Jurisdictions	Crash Data Collection Software Provided to Police Agencies	Database Used for the Master Crash Data
Massachusetts	The crash system consists of a combination of both electronic (30%) and paper (70%). Electronic crash reporting was implemented in 2003.	GPS is used in some jurisdictions. The state police use GPS to accurately record latitude and longitudes of crashes. Very few local jurisdictions use GPS. Lack of resources cited.	Yes	None	ORACLE database written with Visual Basic on a stand-alone platform, which was developed in-house.
New Jersey	The crash system is paper based, but the state is currently pilot testing electronic data transfer with five police departments.	GPS is used by some police departments. Geocode reports through a nightly programmatically process when SRI and distance/milepost are identified.	NR	NR	Oracle Database
New York	Both electronic and paper reporting is used. The New York State repository is the Accident Information System (AIS). AIS utilizes Kofax scanning software to create images, and releases them to AIS, which is comprised of an Oracle data and ODOC workflow product. (PDF/TIF image of the reports are presented to users on data entry screens and data from these are entered manually by staff, converted to XML format and stored in AIS).	GPS coordinates can be used, but it is not mandated.	Yes	TraCS	Oracle Database
North Carolina	A combination of electronic and paper-based reporting is used. Crash Reporting System (CRS) and TraCS are used.	GPS is not used on the DMV electronic reporting form. Anticipated implementation of a location toll in 2010.	NR	TraCS	Oracle Database
Pennsylvania	Trash data system consists of paper and electronic. There are two different platforms to submit data electronically. The State Police uses the TraCS system to report all crashes on I-95. Crash data are uploaded to the state repository via a FTP site. Captivia software used to scan crash reports. An in- house data portal is used to maintain collected data for DOT.	Some agencies have GPS units. Crash form includes a space for latitude and longitude if GPS unit is available.	Yes	No	IBM DB2

State	Crash Data System	Technology Used to Identify Crash Locations	Single Police Accident Report (PAR) Used by the State and All County/Local Jurisdictions	Crash Data Collection Software Provided to Police Agencies	Database Used for the Master Crash Data
South Carolina	The state currently has a paper-based system. However, South Carolina is in the process of implementing an electronic process (called South Carolina Collision and Automated Traffic Ticketing System, SCCATTS) but it will be many years before it is complete. The data are housed at the state's Central Information Office. The South Carolina Department of Public Safety (SCDPS), Office of Highway Safety (OHS), also maintains a MasterFile that is used to conduct various statistical programs.	The officers who are completing the collision reports have handheld GPS units but the information is not always recorded on the collision report accurately.	NR	NR	ADABASE
Vermont	Vermont utilizes both electronic and paper-based crash reporting, but is moving closer to 100 percent electronic. Vermont Agency of Transportation (VAOT) has created a web based reporting tool called Web Crash. Paper reporting is manually entered into SQL server database, and electronic reports are exported to same database.	Yes	Yes	Yes	Microsoft Access
Virginia	Traffic Records Electronic Data System (TREDS) supports both manual and electronic crash reporting. DMV is in the process of transitioning all Virginia law enforcement agencies to electronic.	GPS coordinates are mandated for all electronic crash reports. Some paper reports also capture GPS coordinates.	Yes	Visual Statement Report Beam customized and integrated with DMV custom back-end	SQL Server 2005

Note: NR – Not reported.

Crash Data Reporting Technology

This section presents an inventory of crash data reporting technology and administrative policies for Coalition States. Table F.2 summarizes the technology used for crash data reporting by Coalition States, users of the technology/software, and crash data linkages to other databases (i.e., Citation, Driver License, Vehicle Registration, and EMS).

Table F.2 Technology Used for Crash Data Reporting

State	Technology/Database Used for Data Analysis	Technology/Software Users of Crash Data	Crash Data Linkage to Other Databases (Citation, Driver License, Vehicle Registration, and EMS)
Connecticut	NR	NR	NR
Delaware	NR	Everyone involved in crash data collection and reporting	E-crash will be linked to driver license, citation, and vehicle registration.
District of Columbia	NR	NR	NR
Florida	NR	Law Enforcement, Government, Private Industry, and Citizens.	Citation, driver license
Georgia	IBM DB2, Microsoft Access and Excel All crash report images are available electronically in pdf format. Images can be accessed via the mygdot portal - also in process of migrating to a GDOT contracted vendor – Open Portal Solutions (OPS). OPS will provide a new portal which will allow designated users access to crash data collected as well as web-based ad hoc data querying tools. Basic mapping tools will be provided as well. GDOT continues to make the crash data available to users via its Crash Analysis Reporting Environment software in conjunction with the University of Alabama.	Individual Law Enforcement Agencies throughout the state. GDOT also uses the software internally to make changes or pass updates to individual crash reports received. This function is primarily used for commercial vehicle crashes.	None
Maine	Analysis based on Oracle Database using query tools (ad hoc)	State and local law enforcement use the MCRS Windows client application that can be configured at the agency for standalone or agency-wide network use. This local agency software contains basic reporting capabilities.	Driver license
Maryland	Oracle 11g	SHA DBAs, Towson University (grantee), front end use by CRD staff	None

State	Technology/Database Used for Data Analysis	Technology/Software Users of Crash Data	Crash Data Linkage to Other Databases (Citation, Driver License, Vehicle Registration, and EMS)
Massachusetts	Oracle Database, along with other programs	The Registry of Motor Vehicles, Executive Office of Public Safety and Security, MassHighway, and State Police (Commercial Motor Vehicle Unit).	Driver license
New Hampshire	Microsoft Access and Excel	NR	NR
New Jersey	SAS Database Data warehouse is updated every night and data are available to a limited user base.	Analytical software tool available to outside users (currently over 450 users). The tool utilizes static crash data, which is updated twice a year.	None
New York	Use Microsoft Access, SQL and SAS to extract and program data from Oracle Database	Accident Records and the Certified Document Center (document sales)	Citation, driver license
North Carolina	Oracle Database	North Carolina Division of Motor Vehicles	Vehicle registration, driver license, roadway
Pennsylvania	IBM DB2. An internet web portal is available for police to upload reports to the statewide database.	Police departments and DOT	Citation, driver license
Rhode Island	NR	NR	NR
South Carolina	SAS Database	The OHS Statistician, Research Manager, and FARS analyst.	NR
Vermont	Microsoft Access and SAS Database. Queries on the database are done via programs built into the SQL server program. OHS uses SAS record search, and query tools.	VAOT uses the software to conduct queries and provide reports to anyone requesting it including consultants (both private and State), Health Department staff, law enforcement, researchers, public. Engineering, law enforcement, education, health, and EMS can use crash data for safety initiatives. Data entry application is used by statewide law enforcement. Secure password access necessary.	None
Virginia	Microsoft SQL Server 2005 including SSIS, SSAS, and SSRS. TREDS is the single system of record for data analysis and reporting. The system has role-based security that will deliver the analysis and reporting at various levels requested. It has a unique data warehouse design to support data mining specific for user specifications. Crash data reporting is available for canned/custom reports on historical and real-time crash and other highway safety related data.	Virginia Highway Safety Office, Department of Motor Vehicles, Virginia State Police, local Law Enforcement, Virginia Department of Transportation. TREDS just implemented September 2009. Additional authorized users will increase to include CODES, EMS, Courts, general public, legislative representatives, other state and federal entities.	Current integration with DMV Driver database for driver verification and reporting, motorcycle student databases, with VDOT for location accuracy. Future links planned for EMS, BAC, Hospital outcomes, citation outcomes, special law enforcement programs and other highway safety related databases.

State	Technology/Database Used for Data Analysis	Technology/Software Users of Crash Data	Crash Data Linkage to Other Databases (Citation, Driver License, Vehicle Registration, and EMS)
Virginia *(continued)*	TREDS also has the ability to map crash data on specific locations and provide high crash location analysis based on law enforcement reporting of latitude/longitude. TREDS has the ability to demonstrate "hot spots" locations for improved, targeted enforcement, education and awareness efforts. Integrated motorcycle student training data allows the Virginia Highway Safety Office to link crash data for enhanced correlation analysis of motorcycle crashes in Virginia. TREDS' future reporting and analysis plans include incorporating other state data systems to its crash system for one of a kind enhanced reporting.		

Note: NR – Not reported.

Electronic Crash Data Systems Implementation

Several of the Coalition States are currently in the process of pilot testing or implementing electronic data collection systems. The following pilot projects are in progress:

- **Connecticut** is currently in the middle of an electronic crash data collection system pilot project. The crash data collection is currently a combination of paper-based and electronic, but the agency anticipates transitioning to totally electronic.
- **Delaware** implemented a new crash data collection system (E-Crash) on December 28, 2009. This system was developed specifically for the state and offers more flexibility compared to TraCS (previous system). E-Crash is designed to be efficient and user friendly and should reduce the amount of time for officers to complete a crash report. Officers received training on the new system prior to implementation, which provided the officers an opportunity to test the system and recommend changes to be incorporated into the system before it went on-line.

- **Georgia** will be pilot testing a new electronic crash report called NE Crash in three law enforcement agencies during February 2010.
- **Maryland** does not currently have a statewide electronic crash data system in place. A few counties are using electronic data collection systems, but they are currently required to submit paper forms for inclusion in the state crash database. However, Maryland has recently awarded a grant to CapWIN to develop an electronic crash report. The grant funding is going to the Maryland State Police and they are hiring developers from CapWIN to help develop the Automated Crash Reporting System (ACRS) application which will utilize the technology developed for the E-TIX electronic citation system.
- **New Jersey** has recently begun pilot testing an electronic crash data collection technology with five departments.

G. System Costs

Planning documents reviewed by the project team, and information provided by the states, yielded only two specific examples of expended project costs.

Vermont reported the following costs were expended through September 28, 2009:

- $675,000 in vendor contracts to build their Web Crash electronic crash data collection system;
- $400,000 for agreements with law enforcement agencies for staff time, vendor staff time, cost to upgrade or modify their CAD/RMS application, etc.; and
- $30,000 for hardware and software for the Vermont Agency of Transportation and stakeholders.

Virginia's Section 408 grant application detailed funding expended on crash data collection and reporting systems projects in 2008, including:

- $2,000,000 (estimated 2006-to-date) for a consulting team to plan, design, develop, and implement the new Traffic Records Electronic Data System (TREDS) system.
- $116,462.36 for TREDS software, system maintenance, and training to begin the design of the comprehensive, traffic records automated system.
- $66,000 for the project to reduce the backlog of crash reports in the TREDS crash database and subsequently, its roadway database.
- $37,000 to change, reprint, and distribute the MMUCC compliant, scannable police crash form.
- $20,000 to provide statewide train-the-trainer training on the new FR300 Police Crash Report to over 400 local and state law enforcement trainers.
- $26,737 for staff to perform database programming modifications in the state's crash database, Centralized Accident Processing System (CAP), to enable collection of new fields and attributes from the new FR300P.

While not as precise, additional insight may be gained from funding budgeted for projects. Several states identified project costs in their most recent Section 408 grant applications or Traffic Records Strategic Plans. Project descriptions and projected costs are provided in Table G.1. It should be noted that the yearly costs provided in Table G.1 are not necessarily cumulative. Projects may have been put on hold and funding may have been requested for an additional year to proceed with the project.

Table G.1 Projected Costs for Planned Crash Data Improvement Projects

State	Projected Project Cost	Project Description
Connecticut (June 2009 Traffic Records Strategic Plan)	$188,000 in 2009, with $450,000 budgeted from 2006-2008	E-Crash Reporting to DOT/GPS-GIS/Crash-Roadway-ADT File Integration - The first phase of this three-phase project included developing and implementing an electronic version of the PR-1, and a crash data processing system to provide for receipt of PR-1 crash data in an electronic data format from the Connecticut State Police. Phase II focused on ensuring that ConnDOT had a reliable and easy-to-use means of manually entering and editing records); and making use of the latitude/longitude information to simplify and speed the data entry/validation process and to support future map-based reporting and query capabilities to supplement the current tabular reports. Presently the coders have easy access to high-resolution on-line maps which they can use to reconcile the police diagrams and narrative with the mile point data from the Roadway Inventory System (RIS), accurate to 0.01 miles. In Phase III a PC database system will be developed which will have the ability to input crash data from hardcopy, edit entered data, generate reports and complete ad hoc queries, and integrate data from other data files such as roadway and ADT files with the crash file.
Delaware (FY 2009 408 grant application)	$50,000 in 2007, $10,000 in 2008, $2,500 in 2009, and $2,500 projected for 2010 and 2011	TraCS Users Manual/Data Dictionary/Training - Develop a training manual and data dictionary for TraCS software. Develop training materials for TraCS software for police officers to improve accuracy of crash data collection.
	$330,000 in 2007 and $100,100 annually from 2008-2011	CHAMPS - Develop a GIS-based tool to enable highway safety and law enforcement personnel to analyze, plot, and export crash data for accurate problem identification and resource allocation.
	$15,000 in 2008 and $1,000 in 2009 and 2010	TraCS/SDM Data Transfer - Develop a system/procedure for electronically transferring TraCS data from the Delaware Department of Transportation (DelDOT) to the Delaware State Police (DSP) on a regular basis.
Florida (June 2009 Traffic Records Strategic Plan)	$149,050 in 2009, and $169,950 in 2010	Florida Web-Based Crash Data Collection, Reporting, and Analysis - Develop a web-based integrated crash data system that will provide web-based analytical, mapping, and statistical reporting tools to all the interested end-users. It will also provide a web-based electronic crash data collection system for law enforcement agencies that currently don't use electronic data collection.

State	Projected Project Cost	Project Description
Florida (June 2009 Traffic Records Strategic Plan) *(continued)*	$156,000 in 2009, and $100,000 in 2010	Local Agency Support - Department of Highway Safety and Motor Vehicles to hire staff to continue working with local law enforcement agencies to develop methods for electronically submitting crash reports. Staff will also work to enhance access to the crash database by local and state agencies and to implement the changes to the Florida crash form that have been recommended by the Crash Form Revision Committee to make it more MMUCC compliant
	$19,810 in 2009	Provide tuition funding for up to 100 law enforcement officers, trainers, community service aides, and city/county traffic planners to attend an eight-hour Traffic Crash Reporting Form Workshops on how to accurately complete a Florida crash report.
	$550,000 in 2009	Off State Road Crash Location and Roadway Characteristic Information – Consultant services to enhance previously developed applications for use in the geolocation of crashes on local roads, for projecting local roadways characteristic data where is not otherwise available, and for developing reporting tools.
	$50,850 in 2010	Fund tuition for up to 250 law enforcement officers, non-sworn crash investigators, local traffic records personnel, and agency/academy trainers will be reimbursed so that they can attend an eight-hour Traffic Crash Reporting Form Workshop on how to accurately complete the new Florida traffic crash report form. The new report form, which includes additional MMUCC elements, is scheduled to be implemented on January 1, 2010. The workshop will cover the changes to the report form and common errors that are made on crash reports.
	$174,000 in 2010	Florida Automated Traffic Geographical Information System (FATGIS) - Install and setup ESRI software; to provide a data stream for near real-time data from crash database; to normalize data elements; and to create standard queries, standard reports, and custom reports. Software and hardware will be purchased for the activity.
	$334,400 in 2010	Traffic Safety Information System - Deliver a secure solution for querying core traffic records data sets that are common to the six systems that make up the Traffic Safety Information System. A Traffic Records Electronic Data System (TREDS) project manager and a business analyst will be hired to complete the Project Vision document; develop a Project Charter, Data Dictionary, Operational Work Plan, and Project Schedule and Budget; design Business Requirements; and develop Interface models, specifications, and data security and privacy guidelines.
Georgia (2009 408 grant application)	$100,000 per year from 2006-2009	TraCS - Deploy TraCS at interested law enforcement agencies (LEAs), including installing TraCS, training LEA personnel, and providing essential support for those LEAs that wish to use TraCS. TraCS provides powerful analysis tools for LEAs for both crash and citation data, and for comparisons between the two data sets. These tools identify crash hot spots, circumstances and causation factors, and allow LEAs to evaluate the effectiveness of their enforcement activities. The general plan for this project is to complete operational deployment of TraCS in the pilot Cobb County Police Department, and hire additional TraCS Support Team staff.
	$100,000 in 2006 and $50,000 in years 2007-2009	TraCS Upgrades - Continue developing TraCS for more complete, accurate, and efficient LEA reporting, including development of map based location tools, hand-held devices, standard interface between GCIC and crash reporting tools, and incident related reports.

State	Projected Project Cost	Project Description
Maine (2009 408 grant application)	$245,000 in 2009 and $397,978 in 2010	Maine Crash Reporting System (MCRS) Upgrade - Phase I of the project will update the technical foundation of the system, increase MMUCC compliance of the data collected; and incorporate a common data schema for ease of data transfer between the variety of software programs and agencies.
	$345,000 in 2010	MCRS Upgrade Phase II - Enhance and/or upgrade the existing crash reporting system with agency interfaces and reporting and analysis capabilities.
	$14,110 in 2010	BMV XML Data Exchange Standard Update - Update to reflect changes made to the State of Maine Crash Report Form which is in the process of being updated to improve MMUCC compliance. The project will also update the BMV's processing of crash data using new standard to accommodate any changes in the BMV's business rules due to data changes.
	$160,000 in 2010	MCRS Upgrade Phase III - Create a BMV query (operator and vehicle registration) auto fill function that will backfill operator and vehicle data entry fields using a remote query to a BMV database, and create a Crash Data Warehouse that will provide Maine crash data analysts with dynamic drill-down, data mining, decision support functionality, and pivot table analysis capabilities.
Maryland (2009 408 grant application)	$475,310 in 2009 and $275,330 in 2010	Automated Crash Reporting System (CRS) – Develop an automated CRS which will be made available to laws enforcement agencies. Development will begin with a partnership of Maryland State Police and Capital Wireless Integrated Network (CapWIN).
	$1,650,000 in 2007	Enhanced Maryland Automated Accident Reporting System (eMAARS) - eMAARS makes use of scanners in place of microfilm processing and uses a streamline web entry tool with database driven validation to process the crash reports submitted on paper and enables for the first time electronic submission of crash reports upgrade the State Police Central Records crash reporting system.
	$214,300 in 2008, $315,000 in 2009 and $340,000 in 2010	Maryland Safety Collection and Analysis Network (MSCAN) – MSCAN is a future backend tool to the eMAARS product. The primary focus of MSCAN is to provide analytical tools for engineers and State Highway business partners at the local level.
South Carolina (June 2009 Traffic Records Strategic Plan)	$8,000,000	South Carolina Collision and Ticket Tracking System (SCCATTS) - The South Carolina Department of Public Safety maintains the SCCATTS which houses citation data, violation data, and crash data. SCCATTS serves as the statewide repository for collision and citation data and also employs a GIS component. This multi-year project involves completion of implementation of SCCATTS in the Highway Patrol and Transport Police, including field testing, software implementation, hardware deployment, and training.
	$68,000	Implementation of barcoded documents for the South Carolina DMV - Implementation of barcoding will have a major impact on data quality for crash and citation because information will be captured automatically.