Alaska Department of Transportation & Public Facilities

Alaska University Transportation Center

A Design of an Interface Board between a MRC Thermistor Probe and a Personal Computer

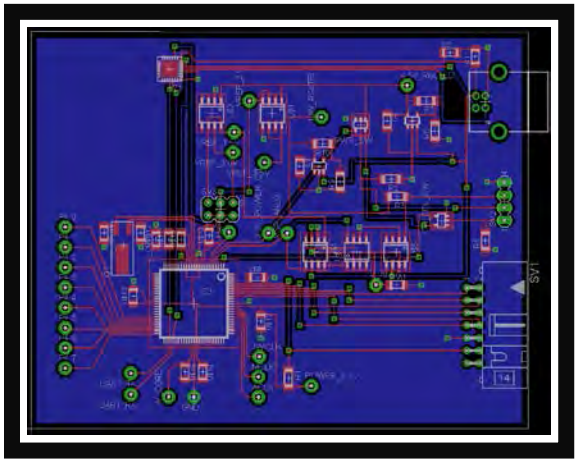

Dejan Raskovic

Electrical and Computer Engineering

University of Alaska Fairbanks

http://go.alaska.edu/draskovic email:draskovic@alaska.edu

225 Duckering Building Telephone: (907) 474-5256

Fairbanks, AK 99775-5915 Fax: (907) 474-5135

September 30, 2013

Prepared By:

Alaska University Transportation Center
Duckering Building Room 245
P.O. Box 755900
Fairbanks, AK 99775-5900

Alaska Department of Transportation Research, Development, and Technology Transfer
2301 Peger Road
Fairbanks, AK 99709-5399

INE #13.003

Report Number 4000102C

REPORT DOCUMENTATION PAGE

Form approved OMB No.

Public reporting for this collection of information is estimated to average 1 hour per response, including the time for reviewing instructions, searching existing data sources, gathering and maintaining the data needed, and completing and reviewing the collection of information. Send comments regarding this burden estimate or any other aspect of this collection of information, including suggestion for reducing this burden to Washington Headquarters Services, Directorate for Information Operations and Reports, 1215 Jefferson Davis Highway, Suite 1204, Arlington, VA 22202-4302, and to the Office of Management and Budget, Paperwork Reduction Project (0704-1833), Washington, DC 20503

1. AGENCY USE ONLY (LEAVE BLANK)	2. REPORT DATE	3. REPORT TYPE AND DATES COVERED
4000102C	September 30, 2013	FINAL

4. TITLE AND SUBTITLE

A Design of an Interface Board between a MRC Thermistor Probe and a Personal Computer

5. FUNDING NUMBERS

AKSAS #50533/T2-12-19
INE #13.003
Federal 4000102C

6. AUTHOR(S)
Dejan Raskovic
Electrical and Computer Engineering

7. PERFORMING ORGANIZATION NAME(S) AND ADDRESS(ES)
Alaska University Transportation Center
Duckering Building Room 245
P.O. Box 755900
Fairbanks, AK 99775-5900

8. PERFORMING ORGANIZATION REPORT NUMBER

INE #13.003

9. SPONSORING/MONITORING AGENCY NAME(S) AND ADDRESS(ES)

Alaska Department of Transportation and Public Facilities
Research, Development &Technology Transfer
2301 Peger Rd
Fairbanks, AK 99709-5399

10. SPONSORING/MONITORING AGENCY REPORT NUMBER

4000102C

11. SUPPLEMENTARY NOTES

Prepared in cooperation with the Alaska Department of Transportation and Public Facilities

12a. DISTRIBUTION / AVAILABILITY STATEMENT

No restrictions.

12b. DISTRIBUTION CODE

13. ABSTRACT (Maximum 200 words)

The main purpose of this project was to design and build a prototype of an interface board between an MRC temperature probe (thermistor array) and a personal laptop computer. This interface board replaces and significantly improve the capabilities of an existing MRC RD100 readout instrument. The new interface board provides the user to test a new installation as well as read instantaneous thermistor array. The report also documents the outputs of the MRC temperature probe for future and the operational characteristics of both the MRC RD100 and the new interface board.

14. KEYWORDS : thermistors((Qtbcit), electrical circuits(Qtbci), temperature sensors(Dmgut), temperature measurement(Dmch), Temperature measuring instruments(Gumsv)

15. NUMBER OF PAGES
106

16. PRICE CODE
N/A

17. SECURITY CLASSIFICATION OF REPORT	18. SECURITY CLASSIFICATION OF THIS PAGE	19. SECURITY CLASSIFICATION OF ABSTRACT	20. LIMITATION OF ABSTRACT
Unclassified	Unclassified	Unclassified	N/A

Notice

This document is disseminated under the sponsorship of the U.S. Department of Transportation in the interest of information exchange. The U.S. Government assumes no liability for the use of the information contained in this document.

The U.S. Government does not endorse products or manufacturers. Trademarks or manufacturers' names appear in this report only because they are considered essential to the objective of the document.

Quality Assurance Statement

The Federal Highway Administration (FHWA) provides high-quality information to serve Government, industry, and the public in a manner that promotes public understanding. Standards and policies are used to ensure and maximize the quality, objectivity, utility, and integrity of its information. FHWA periodically reviews quality issues and adjusts its programs and processes to ensure continuous quality improvement.

Author's Disclaimer

Opinions and conclusions expressed or implied in the report are those of the author. They are not necessarily those of the Alaska DOT&PF or funding agencies.

SI* (MODERN METRIC) CONVERSION FACTORS

APPROXIMATE CONVERSIONS TO SI UNITS

Symbol	When You Know	Multiply By	To Find	Symbol
	LENGTH			
in	inches	25.4	millimeters	mm
ft	feet	0.305	meters	m
yd	yards	0.914	meters	m
mi	miles	1.61	kilometers	km
	AREA			
in^2	square inches	645.2	square millimeters	mm^2
ft^2	square feet	0.093	square meters	m^2
yd^2	square yard	0.836	square meters	m^2
ac	acres	0.405	hectares	ha
mi^2	square miles	2.59	square kilometers	km^2
	VOLUME			
fl oz	fluid ounces	29.57	milliliters	mL
gal	gallons	3.785	liters	L
ft^3	cubic feet	0.028	cubic meters	m^3
yd^3	cubic yards	0.765	cubic meters	m^3
	NOTE: volumes greater than 1000 L shall be shown in m^3			
	MASS			
oz	ounces	28.35	grams	g
lb	pounds	0.454	kilograms	kg
T	short tons (2000 lb)	0.907	megagrams (or "metric ton")	Mg (or "t")
	TEMPERATURE (exact degrees)			
^oF	Fahrenheit	5 (F-32)/9 or (F-32)/1.8	Celsius	^oC
	ILLUMINATION			
fc	foot-candles	10.76	lux	lx
fl	foot-Lamberts	3.426	candela/m^2	cd/m^2
FORCE and PRESSURE or STRESS				
lbf	poundforce	4.45	newtons	N
lbf/in^2	poundforce per square inch	6.89	kilopascals	kPa

APPROXIMATE CONVERSIONS FROM SI UNITS

Symbol	When You Know	Multiply By	To Find	Symbol
	LENGTH			
mm	millimeters	0.039	inches	in
m	meters	3.28	feet	ft
m	meters	1.09	yards	yd
km	kilometers	0.621	miles	mi
	AREA			
mm^2	square millimeters	0.0016	square inches	in^2 m^2
square meters		10.764	square feet	ft^2 m^2
square meters		1.195	square yards	yd^2
ha	hectares	2.47	acres	ac
km^2	square kilometers	0.386	square miles	mi^2
	VOLUME			
mL	milliliters	0.034	fluid ounces	fl oz
L	liters	0.264	gallons	gal
m^3	cubic meters	35.314	cubic feet	ft^3 m^3
	cubic meters	1.307	cubic yards	yd^3
	MASS			
g	grams	0.035	ounces	oz
kg	kilograms	2.202	pounds	lb
Mg (or "t")	megagrams (or "metric ton")	1.103	short tons (2000 lb)	T
	TEMPERATURE (exact degrees)			
^oC	Celsius	1.8C+32	Fahrenheit	^oF
	ILLUMINATION			
lx	lux	0.0929	foot-candles	fc
cd/m^2	candela/m^2	0.2919	foot-Lamberts	fl
FORCE and PRESSURE or STRESS				
N	newtons	0.225	poundforce	lbf
kPa	kilopascals	0.145	poundforce per square inch	lbf/in^2

*SI is the symbol for the International System of Units. Appropriate rounding should be made to comply with Section 4 of ASTM E380. (Revised March 2003)

*SI is the symbol for the International System of Units. Appropriate round

Table of Contents:

1 INTRODUCTION 3

1.1 OBJECTIVE 3
1.2 PROCEDURE 3

2 CHARACTERIZATION OF THE MRC RD100 TEMPERATURE READ OUT 3

2.1 OBJECTIVE 3
2.2 PROCEDURE AND RESULTS 3
2.2.1 RD100 Operation 5
2.2.2 Electrical characteristics 5

3 CHARACTERIZATION OF THE MRC THERMISTOR PROBE 9

3.1 OBJECTIVE 9
3.2 PROCEDURE AND RESULTS 11

4 IMPLEMENTATION - PROTOTYPE #1 14

4.1 OBJECTIVE 14
4.2 DESIGN PROCEDURE AND JUSTIFICATION 14
4.3 TESTING RESULTS FOR PROTOTYPE #1 15
4.4 CONCLUSION 15

5 IMPLEMENTATION - PROTOTYPE #2 16

5.1 OBJECTIVE 16
5.2 DESIGN PROCEDURE AND JUSTIFICATION 16

6 IMPROVEMENTS AND IMPLEMENTATION - PROTOTYPE #3 (THE FINAL PROTOTYPE) 18

6.1 SIMPLIFIED SYSTEM MODEL 18
6.2 PROTOTYPE #3 DESIGN 19
6.2.1 Observation, Discussion and Reasoning 19
6.2.2 Details of Prototype #3 Hardware Implementation 20
6.2.2.1 MSP430 Microcontroller 20
6.2.2.2 USB Interface 20
6.2.2.3 Voltage Regulation 20
6.2.2.4 Signal adjusting 21
6.2.2.5 References Voltage generation (not shown on the simplified model) 22

7 EMBEDDED SOFTWARE DEVELOPMENT 23

7.1 OBJECTIVE 23
7.2 DESIGN PROCEDURE AND JUSTIFICATION 23
7.3 CALIBRATION AND TESTING 24
7.4 PRINTED CIRCUIT BOARD DESIGN 25

8 FUTURE WORK 26

APPENDICES 27

List of Figures:

Figure 1. RD100 readout device, displaying measurements for channel 2 4
Figure 2. Front of the RD100's circuit board, showing different components 4
Figure 3. Back of the RD100's circuit board, showing the four wire connections 4
Figure 4: Details of the RD100's printed circuit board..... 5
Figure 5. Select Channel signal, 5.66 V with 112 ms width..... 6
Figure 6. Illustration of the scenario when SELECT CHANNEL button is held down..... 7
Figure 7. Power (green) and Select channel (yellow) signals when RESET is pressed and then released.... 7
Figure 8. Power signal (green) and V_analog signal when RESET is pressed and then released 8
Figure 9. Read out temperature vs. voltage profile..... 8
Figure 10. Thermistor array with its connection cable (the ruler placed alongside is 1 m long) 10
Figure 11. Physical connection between thermistor array (side A) and RD100 device (side B). 11
Figure 12. Probe's Analog Circuit Model 12
Figure 13. Thermistor resistance profile..... 13
Figure 14. Temperature v. voltage for Prototype #3 14
Figure 15. Prototype #2 power switch..... 17
Figure 16. Prototype #2 analog front end..... 17
Figure 17. Simplified model of the RD100 and thermistor array system 18
Figure 18. Simplified model of the improved system design..... 19
Figure 19. Low-Noise Adjustable Voltage Regulator 21
Figure 20. package (SOT23) and logic diagram of the SN74LVC1G66 switch 21
Figure 21. Circuit schematic implementing a difference amplifier used for signal adjusting..... 22
Figure 22. Voltage divider to generate reference voltages 22
Figure 23. Screenshot of a terminal program displaying user interface and data format 24
Figure 24. Modified prototype #2..... 25
Figure 25. PCB layout (Prototype#3)..... 26

Figure A. 1 Embedded software block diagram..... 28

Figure C. 1: Prototype #1 Schematic Diagram 30
Figure C. 2: Prototype #1 board layout (representative only)..... 30

Figure D. 1: Prototype #2 schematic diagram..... 31
Figure D. 2: Prototype #2 Board Layout..... 32

Figure E. 1: Prototype #3 schematic diagram - microcontroller..... 33
Figure E. 2: Prototype #3 schematic diagram – communication, signal conditioning, and power 34
Figure E. 3: Prototype #3 Board Layout 35

List of Tables:

Table 1. RD100 Wiring Color Code 6
Table 2. Thermistor Array Wiring Color Code 10
Table 3. Probe IC Model Numbers and Descriptions 11
Table 4. Data points 13
Table 5. Testing results of linearity between voltage and temperature 13

Executive Summary

The main purpose of this project was to design and build a prototype of an interface board between an MRC temperature probe (thermistor array) and a personal laptop computer. This interface board is expected to replace and significantly improve the capabilities of an existing MRC RD100 readout instrument.

The project was successful in developing a prototype of the device that is functional, has been tested, and performs as expected.

Acknowledgments

I would like to thank the Alaska DOT and the AUTC for the opportunity to work on this proposal, and I hope that we will have a chance to work together again in the near future. Special thanks goes to Billy Connor, AUTC director, for bringing the project to us and providing the matching funding, Howard Helkenn, for his patience in answering many questions of the undergraduate student who worked on this project, and Kathy Petersen for managing the grant in the most efficient way possible. Finally, I would like to mention two students that worked tirelessly on this project. Joe Stribrny, an undergraduate student, successfully juggled this project, a tutoring job, and finishing his EE program while enrolled in ROTC, until the moment he had to leave. Bertrand Dushime, a graduate student, took over without pay because the funds were long gone, implemented numerous improvements, and made everything work. I am very grateful to both of them.

1 INTRODUCTION

1.1 Objective

The purpose of this project was to design a PC interface for the Measurement Research Corporation (MRC) thermistor probe. This interface would replace the model RD100 temperature readout and provide a modern interface to existing field installations throughout Alaska.

1.2 Procedure

The first step of the research was to characterize the probe and RD100. We tried to contact the Measurement Research Corporation, but without any success. We concluded the MRC was now defunct and that we would have to develop the interface without any support from the manufacture.

The second step was to observe the operation of the probe and the RD100. To do this, we first had to determine the correct connections between the RD100 and the probe, because wrong instructions were sent with the devices. After observing the system in action, we began the electrical characterization of the system using various electrical instruments.

Finally, a series of three prototypes were designed, the required parts specified, the printed circuit boards (PCB) designed, and sent to the PCB manufacturer (except for the final prototype). While waiting for the PCB's to arrive, the students worked on improving the embedded software. When prototype boards would arrive, we would populate and test the prototypes.

Using the results from each prototype, additional tests on the probe and RD100 were developed and conducted. Information gained from these tests was used to design the next prototype.

Testing of the third prototype was successful and marked the completion of the project.

2 CHARACTERIZATION OF THE MRC RD100 TEMPERATURE READ OUT

NOTE: Some of the discoveries were made after the first or second prototype was made. This section summarizes all of the findings.

2.1 Objective

The purpose of characterizing the MRC Probe was to determine the electrical characteristics of the probe to allow us to develop an interface to it.

2.2 Procedure and Results

The first step was to attempt to connect the RD100 to the probe through the electrical hub provided to us by ADOT and see if the system worked properly. Since the wires from the RD100 and the probe did not coordinate we had to make assumptions as to the correct wiring, following the instructions received with the device. We assumed the red and black wires from the RD100 were power and ground respectively. This step was unsuccessful since the RD100 failed to display a reasonably valid

temperature. Our next step was to open the RD100 case and determine the correct color-coding of the wiring. Our assumption was proved to be false after examining the wires entering the RD100's PCB. The signal names were silkscreened onto the board as described in Table 1. This was later confirmed by Howard Helkenn, ADOT highway data manager. He explained that they had had problems with the MRC inconsistently color coding their devices from version to version.

Figures 1-4 show the details of the RD100 readout device.

Figure 1. RD100 readout device, displaying measurements for channel 2

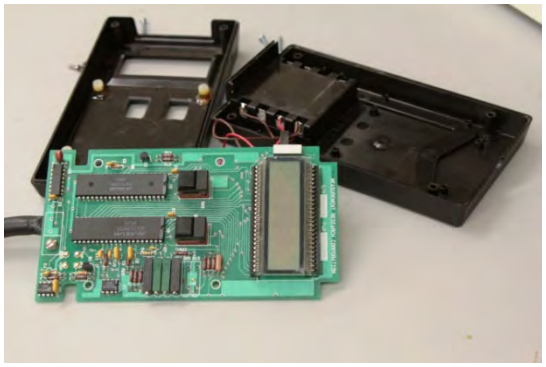

Figure 2. Front of the RD100's circuit board, showing different components

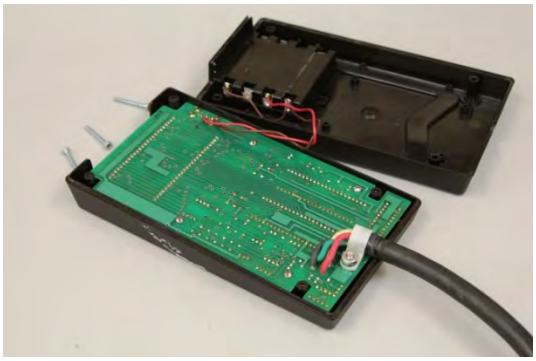

Figure 3. Back of the RD100's circuit board, showing the four wire connections

Figure 4: Details of the RD100's printed circuit board

2.2.1 RD100 Operation

The RD100 performs four main functions.

1. **Powering** the thermistor array
2. **Selecting channels**: Channels are selected in an ascending order consecutively from channel 1 to the last channel available. This function is controlled by the SELECT CHANNEL button.
3. **Resetting**: The reset function clears the reading and sets both the RD100 and the thermistor array to the initial state ready to take a measurement from channel 1. This function is controlled by the RESET button.
4. **Processing data and displaying measurements**: The RD100 takes measurements from the thermistor array, process the signal and display the measurements on the LCD screen. The display consists of the channel number followed by a corresponding temperature given in Fahrenheit, from -99.9 to 99.9.

2.2.2 Electrical characteristics

The RD100 is powered by two 9 V batteries. After an unsuccessful attempt to characterize the RD100 by tracing and examining its printed circuit board and components; the RD100 was examined as a black box where its electrical behavior was analyzed by applying specific inputs.

The RD100 has an ON/OFF switch button which obviously turns on and off the RD100 device. It also has CHANNEL SELECT and RESET buttons that perform the select channel and reset functions as described above.

The RD100 uses a four-wire interface described in Table 1.

Table 1. RD100 Wiring Color Code

Wire Color	**Red**	**Tan/White**	**Black**	**Green**
Signal Name/function	Power	Ground	Channel select	V_analog (Temperature signal)

Description and behavior of identified signals

Power (Red wire): The red wire provides a constant 5 V power supply to the thermistor array whenever the RD100 is turned on. The current drawn by the thermistor is in the order of micro Amperes (µA) and varies depending on the temperature; the peak current detected was 18.0 µA at 97.8 F.

Ground (Tan/White wire): This is the common ground for both the RD100 and the thermistor array.

Channel Select (Black wire): The channel select signal is initially 0 V. As soon as the Channel Select button is pressed, it generates a pulse of 5.66 V and stays high as long as the select button is held down (binary signal active high). The select channel button has to be held down for at least 100 ms for a channel to change (for reference, a normal push of a button with neither hurry nor prolonged holding lasts about 200 ms). Figure 5 shows the channel select signal when the CHANNEL SELECT button is pushed.

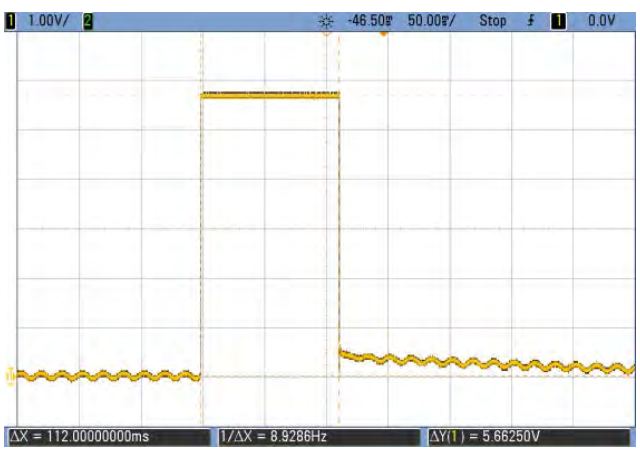

Figure 5. Select Channel signal, 5.66 V with 112 ms width

When the CHANNEL SELECT button is held down for an extended time (approximately more than 1.25 seconds), it cycles through more than one channel with a frequency close to 1 Hz. Initially, our prototypes followed the same timing that RD100 uses, approximately 220 ms off, 880 ms on. Later we switched to a 50-50 signal, which can be emulated by a clock signal with frequency of 1 Hz and the

Channel Select signal. The channel changes on a rising edge of the clock whenever the Select Channel is high (AND logic). Figure 6 illustrates the scenario when the CHANNEL SELECT button is held down.

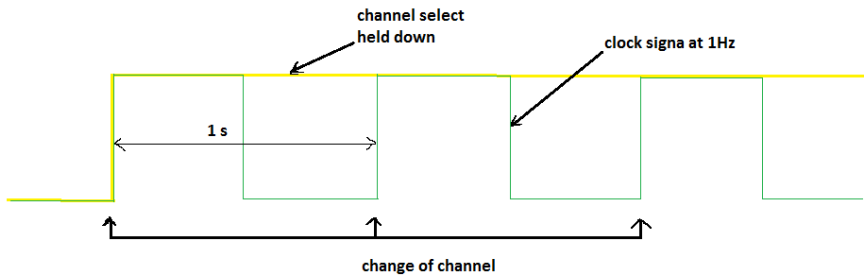

Figure 6. Illustration of the scenario when SELECT CHANNEL button is held down

V_analog (Green wire): The V_analog signal which is proportional to measured temperature is an input signal to the RD100 readout device. However, it has an offset voltage of 3.4 V that can be measured when the RD100 is turned on with no thermistor array connected. This fact greatly affected the design of Prototype #3.

When the RESET button is pressed, all the signals are shut down. After the button is released, the power signal goes back to 5V, the V_analog signal goes to 3.5V, and the Select channel signal stays at zero until the CHANNEL SELECT button is pressed. Figure 7 and Figure 8 show the behavior of different signals when the RESET button is pressed.

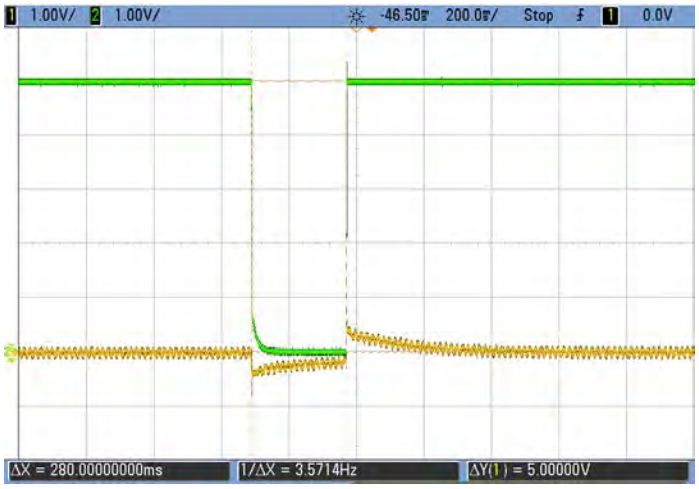

Figure 7. Power (green) and Select channel (yellow) signals when RESET is pressed and then released

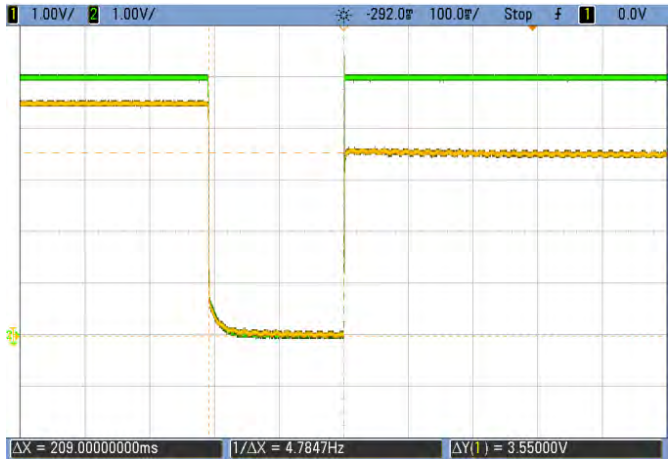

Figure 8. Power signal (green) and V_analog signal when RESET is pressed and then released

In Figure 8, V_analog signal was initially around 4.5 V measuring room temperature (~ 69F) and after the reset, V_analog went to 3.5 V.

The next step was to determine the calibration of the RD100. To do this, a variable voltage was applied to the RD100 V_analog wire using a DC voltage supply and the corresponding temperature readout was determined. Figure 9 shows the RD100's Temperature vs. Voltage profile and linear regression with a reduced set of data points.

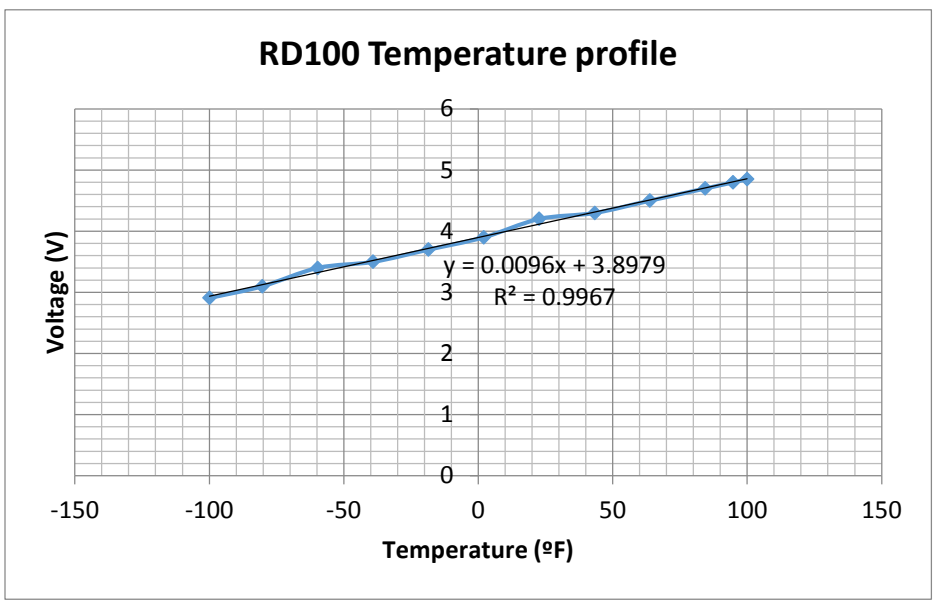

Figure 9. Read out temperature vs. voltage profile

The RD100 is capable of reading temperatures from 99.9 F to -99.9 F with V_analog ranging from 4.852 V to 2.909 V. Its temperature profile is linear with voltage indicating that there is hardware linearization of the thermistor implemented within the probe.

Based on the results from this portion of testing, the set of following requirements for the prototypes were developed. These requirements were adjusted after later testing on the probe and again after testing on the 1st prototype:

- Power must be supplied at 4.98 V ± 0.04 V
- The chip select signal is 0.0V while reading channels and must pulse to 5.5 V for at least 0.125 ms to cycle through the channels and held low 220 ms between channel switches.
- The prototype must sample analog voltages ranging from 4.852 V to 2.909 V.

These results were later relaxed based on additional tests performed, especially after the characterization of the MRC thermistor probe was completed.

3 Characterization of the MRC Thermistor Probe

3.1 Objective

The objective of this portion of the project was to electrically characterize the MRC Thermistor Probe to allow us to adjust and relax our requirements in order to use available power sources (5.0 ± 0.25 V USB power) and microcontroller-level signals (3.3 V on TI's MSP430). Also, we needed to verify that a 4.5 V pulse could change the channel instead of the 5.66 V normally generated by the RD100.

The current thermistor array is 185 cm long and has fifteen thermistors that can be visually identified, with the first thermistor (Channel 1) being the closest to the wire connection. This identification allows generating different temperatures at specified channels for testing purposes. The following image shows the thermistor array and its long connection cable.

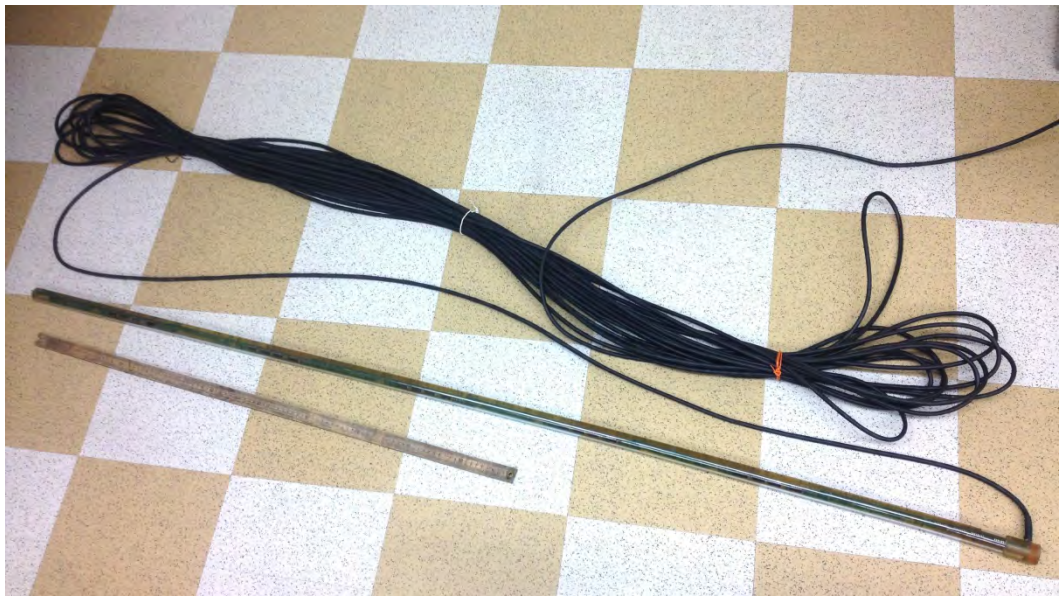

Figure 10. Thermistor array with its connection cable (the ruler placed alongside is 1 m long)

The thermistor array has four wire connections described in Table 2. Notice that the color coding of the thermistor differs from the RD100's color coding.

Table 2. Thermistor Array Wiring Color Code

Wire Color	**Red**	**Black**	**Orange**	**Blue**
Signal Name/function	Power	Ground	Channel Select	V_analog (Temperature signal)

Description and behavior of identified signals

- **Power (Red wire):** The Vcc for the thermistor array
- **Ground (Black wire):** The common ground for both the RD100 and the thermistor array
- **Channel Select (Orange wire):** A control signal (input, binary, active high) that controls the sequencing of channels.
- **V_analog (Blue wire):** The V_analog signal which is proportional to measured temperature can be viewed as an output signal from the thermistor array. When there is no readout device connected to it, it measures slightly less than the value of the Vcc applied to the thermistor array.

Figure 11 shows the correct physical connections between the RD100 device and the thermistor array. From top to bottom, the signals are as follows: V_analog, Channel Select, Power and Ground.

Figure 11. Physical connection between thermistor array (side A) and RD100 device (side B).

3.2 Procedure and Results

The first step was to try to identify the components in the probe. Because the entire probe is encased in semi-clear resin material, the only method we could use was observation through a magnifying glass. The integrated circuits (IC) in the probe were identified as various analog multiplexers and switches. Table 2 lists the IC's we were able to identify and their brief descriptions. The data sheets for these IC were examined and it was found they could all operate at lower voltages. We choose 4.5 V because that allowed us to regulate the USB power, with a minimum voltage of 4.75V, to 4.5 V, using a low dropout voltage regulator.

Table 3. Probe IC Model Numbers and Descriptions

IC model number:	CD4051BC	SN54HC393	SN54HC393
Description:	Analog Multiplexer Vss Range: 3-15 V	Data Selector Vss Range: 2-6 V	Binary Counter Vss Range: 2-6 V

We took current draw readings for the power signal. The probe drew 0.923 mA while switching channels, and approximately 13.4 µA otherwise.

The next step was to determine if the channel select could be sourced directly from the microcontroller general-purpose input output (GPIO) which generates 3.3 V digital signals. Attempts to toggle the channel by touching the channel select wire to 3.3 V were unsuccessful due to the lack of debouncing. When a debounced switch was used, voltages as low as 3.0 V consistently resulted in a channel switch. Voltages of 2.5 V produced more inconsistent channel switching.

Further characterization of the analog signal was also conducted. For the first prototype, we were working under the assumption that the probe contained the circuitry as shown in Figure 12.

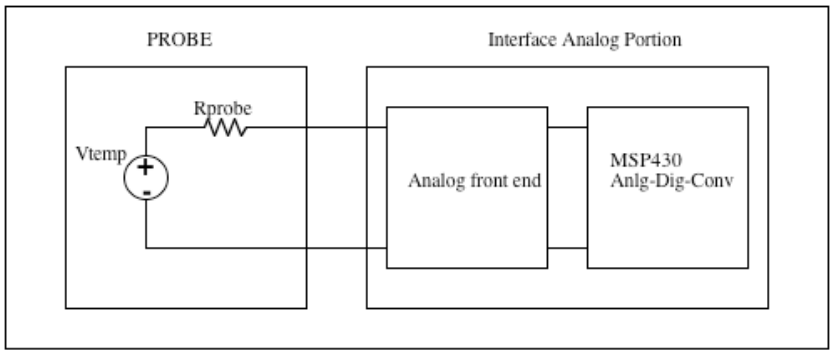

Figure 12. Probe's Analog Circuit Model

The Rprobe was assumed to be constant and the Vtemp was the temperature dependent component. The analog front end had the task of transforming the elevated voltages from the probe to the lower voltages the MSP430 could accept. This model was proved to be incorrect after testing the prototype #1. The Vtemp was found to be constant at the probe supply voltage and the Rprobe was the temperature dependent component. Nevertheless this model was the basis of the prototype #1. The Rprobe was measured as approximately 75.0 kΩ and used for the design of prototype #1.

The expected analog voltages with the reduced 4.5 V power supply were determined by subtracting 0.5 V from the 5.0 V power supply. So, for prototype #1 expected analog voltage range with the reduced 4.5 V power supply was expected to be between 4.352 V and 2.409 V.

Testing on the probe after the analog portion of the first prototype failed showed the Vtemp was actually the constant parameter set at the probe supply voltage and the Rtemp was actually the temperature dependent thermistor that obeyed the Steinhart-Hart Equation given in Equation (1).

$$\begin{aligned} &\frac{1}{T} = a + b\ln(R) + c\ln^3(R); \\ &\text{T is absolute temperature in Kelvin,} \\ &\text{R is thermistor resistance in } \Omega, \\ &\text{a, b, and c are thermistor coefficients} \end{aligned} \tag{1}$$

The thermistor coefficients were determined by taking three independent data points and creating a system of equations. Table 4 shows the three data points used. Using these data points, the coefficients were calculated and a model for the Rprobe in Equation (2) was developed.

$$T = \frac{1}{4.561x10^{-3} - 271.35x10^{-6}\ln(R) + 1.473x10^{-6}\ln^3(R)} \tag{2}$$

Figure 13 shows this temperature vs. resistance profile. Since the profile is non-linear, the most efficient way of analyzing circuits with the thermistor is numerically.

Table 4. Data points

Temperature (F)	41.9	69.0	84.4
Temperature (K)	278.65	293.71	302.26
Resistance (Ω)	72,506	34,306	20,505

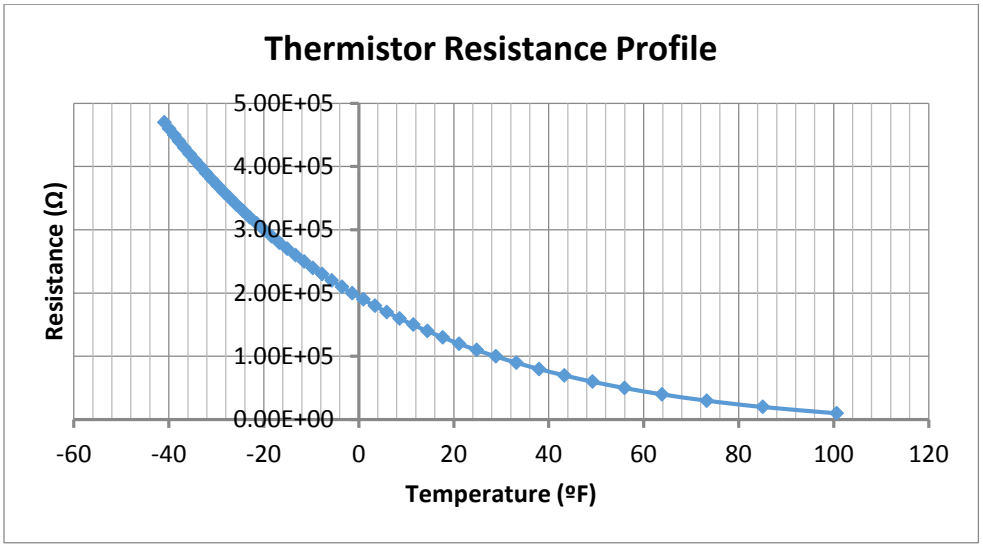

Figure 13. Thermistor resistance profile

A common practice suggests a shunt resistor paired with the thermistor for linearization. We had to assume that the designers of the thermistor probe did the same. The testing results proved that the current thermistor array has a linear relation between voltage and temperature. The results are shown in Table 5 and Figure 14.

Table 5. Testing results of linearity between voltage and temperature

	Temperature Reading (F)	**Voltage Measured (V)**
Channel 1	84.8	4.69
Channel 2	90.6	4.74
Channel 3	86.5	4.70
Channel 4	78.3	4.62
Channel 5	72.4	4.56
Channel 6	69.3	4.53
Channel 7	68.2	4.52
Channel 8	67.7	4.52
Channel 9	67.2	4.51
Channel 10	67.2	4.51

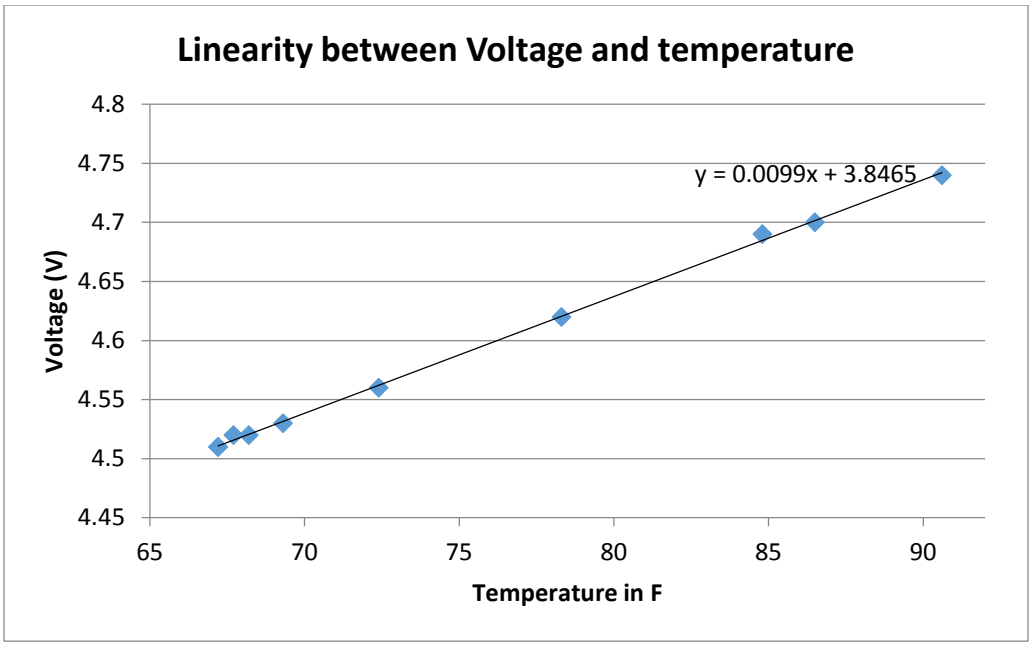

Figure 14. Temperature v. voltage for Prototype #3

Consequently, it was concluded that the thermistor probe is internally linearized, and there was no need to include a linearization module in the design process.

4 Implementation - Prototype #1

4.1 Objective

The main objective of the first prototype was to test the following components and sub-circuits:

- CP2102 UART-USB Bridge
- REF5045IDGKT 4.5V Reference
- Probe Power Switch (AND gate implementation)
- 20 kΩ Precision Voltage Divider
- Analog channel low pass filter and voltage divider.

4.2 Design Procedure and Justification

The CP2102 UART-USB bridge was chosen because we had previous experience with it in other projects. This chip provides USB connectivity to the interface and has an added bonus in a form of its onboard 3.3 V regulator that could be used to power the MSP430 board.

The REF5045IDGKT 4.5 V reference was chosen because it had a very tight 0.05 % tolerance and low 3 ppm/˚C temperature coefficient. It also had a low dropout voltage of less than 0.25 V provided the load current is less than 2.5 mA. These specifications made this component ideal for our application.

The probe power switch was designed with an AND gate to allow the MSP430's 3.3 V GPIO to control the power switch. The AND gate (Part Number: SN74AHCT1G08DBVR) was chosen because it had an appropriate gate threshold voltage. It was thought the AND gate would supply the output current from its power terminal. We hoped this implementation would limit the amount of components we would have to layout and solder.

The analog portion of the interface consisted of a ½ ratio voltage divider and low pass filter. The voltage divider would transform the analog voltage range to 2.176 V to 1.205 V. The 20 kΩ precision voltage divider was used to create the ADC reference voltages that would allow greater precision reading the probes analog voltage line. The reference voltages ranged from 2.25 V to 1.125 V giving the ADC a precision of 275 µV/bit. A voltage divider was chosen to create the reference voltages over precision voltage references because they allow greater flexibility in choosing the generated voltage and because it created a dependence on the 4.5 V reference generator, so inaccuracies in the 4.5 V reference would be compensated in the ADC references.

Initially, 6-pin RJ11 phone connectors were selected to make connecting the interface to the probe and MSP430 microcontroller easier. This option was later abandoned in favor of other means of connection.

4.3 Testing Results for Prototype #1

REF5045IDGKT 4.5 V reference tested at 4.5023 or 0.051% error. This is close to the specified tolerance. The error in the voltage divider circuit was also within specifications; expected voltage range of the ADC positive voltage reference given the 4.5023 V reference was 2.2509 V to 2.2514 V. The measured value was 2.2512 V, almost directly in the middle of the expected range.

The CP2102 UART-USB bridge worked as expected with no external components.

The analog portion of the circuit failed to operate correctly because the internal resistance was taken with the RD100 connected (it was assumed the RD100's analog end had a high and therefore negligible impedance). A test with the RD100 disconnected was conducted. The open circuit voltage was quite very nearly the supply voltage; the small voltage drop was probably the effect of meter loading. This result indicated the probes analog portion followed the topology presented in Figure 12 with Vtemp equal to the supply voltage and the Rprobe equivalent to the thermistor profile presented in Figure 13.

The AND Gate power switch did not work as intended. Upwards of 30 mA on the power control pin was required to turn the output on. The MSP430 is not capable of supplying this current so an alternate power switch was designed for prototype #2.

4.4 Conclusion

The implementation and testing of prototype #2 provided some very important results. The prototype helped us confirm that the CP2102, REF5045, and RNCF precision resistor chips are suitable for continued use. However, the power switch and analog front end did not function as intended.

The surface mount capacitors and resistors were originally chosen to be 0402 SMD packages and later modified to 0603 SMD packages. These resistors proved very small and hard to solder requiring the time consuming use of a pick and place machine. Further prototyping should use 1206 SMD packages. The extra expense of board space and larger parts is smaller than the expense of time required to place and solder the smaller parts.

We also concluded that the second prototype should include more test points to ease testing and to allow later modification of the prototype.

5 Implementation - Prototype #2

5.1 Objective

The objective of the second prototype was to make the improvements to prototype #1, incorporate the MSP430 onto the interface board, and to fit the board to the Sparkfun (sparkfun.com) project box (Sparkfun Part Number: #WIG-08601).

5.2 Design Procedure and Justification

The first failure of prototype #1, the power switch, was redesigned using a PMOS and NPN transistor (see Figure 15). The NPN transistor was used to transform the MSP430's 3.3 V GPIO into a 5 V GPIO signal. The PMOS transistor acts as the actual switch and is activated when the power control pin is toggled high. It is expected to create a ~0.2 V voltage drop to the power voltage. This should be negligible.

The analog portion of the interface was the second failure of prototype #1 and was redesigned as shown in Figure 16. One opamp is used as a unity gain buffer to ensure the second opamp circuit, acting as a level shifter, without disturbing the voltage divider. The level shifter circuit was tested with the probe using a power supply as the reference voltage. This circuit worked well and was incorporated into the second prototype to correct the error that arose from the inaccurate probe model used in the prototype #1.

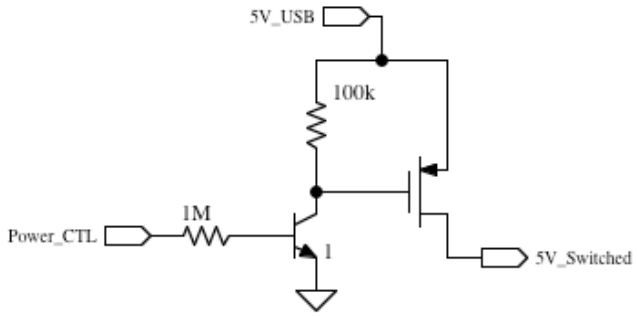

Figure 15. Prototype #2 power switch

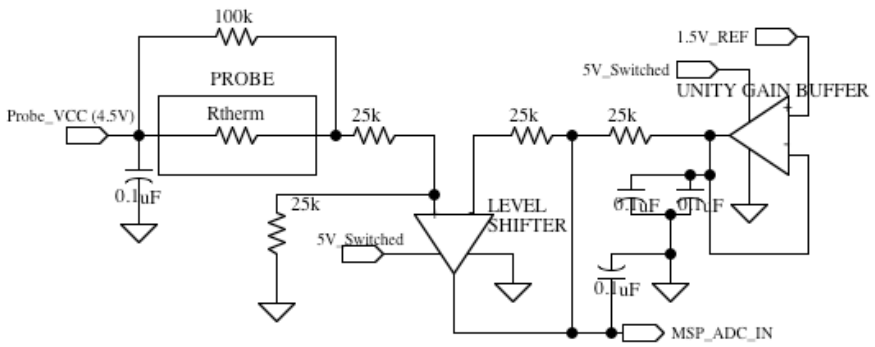

Figure 16. Prototype #2 analog front end

The voltage divider circuit was redesigned to use resistor arrays. These components offer the advantage of requiring fewer components while providing adequate precision.

The SMD capacitors were chosen in the 1206 package and resistors were chosen in through hole packages to facilitate easier soldering. It is hoped the time-consuming pick-and-place machine should only be used for placing the 4.5 V reference generator, the CP2102 UART-USB bridge, and the MSP4305438A.

Additionally, numerous test points were incorporated in the second prototype. The test points, octagonal shaped, are distinguished from routing vias, square shaped. The test points are silk screened on the bottom of the board. The components names are silk screened on the top side of the board. LED's were incorporated into this prototype to show the status on various power signals. Three additional LED's were laid out to be wired at a later time if desired.

The board outline was laid out to fit the Sparkfun project box specified in the objective. The USB port, the JTAG access point, and the probe access point were laid out to lay in the project box opening. The board outline from prototype #1 came from the manufacture, OSH Park, cut 0.07" off on the sides so an additional buffer of 0.1" was added to each side of the outline to ensure errors at the manufacture

could be corrected in house. It will be required to adjust the outline with a coping saw and/or belt sander. It is advised that a clamped rail, as used on a table saw, be utilized on the coping saw when making these adjustments. The belt sander should be used for finishing the trimming and making more fine adjustment of the outline size.

Contingency components were also laid out. 1.5 V and 2.5 V reference generators were laid out in case the voltage divider circuits proved ineffective. These would have to be manually wired in should they become required. Several MSP430 GPIO pins were also broken out in case additional control pins were required.

As planned, the board was partially populated using a pick-and-place machine. The machine was operated by a different student, trained to use it, but he unfortunately made a number of errors, which resulted in additional time spent on fixing those errors.

6 Improvements and Implementation - Prototype #3 (the final prototype)

6.1 Simplified System Model

Figure 17 illustrates a simplified model of the RD100 connected to the thermistor array. Testing results and calculations proved the value of the resistor inside RD100 to be around 77 KΩ.

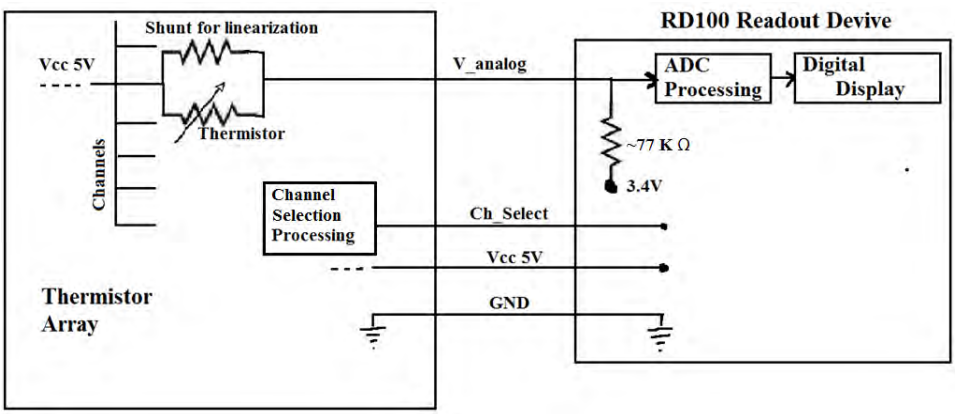

Figure 17. Simplified model of the RD100 and thermistor array system

From the Steinhart-Hart Equation's observation, it is clear that the temperature is inversely related to the thermistor resistance value. From examining this model, it is obvious that for high temperatures the thermistor resistance will be close to zero, resulting in V_analog being close to Vcc. However, V_analog will never be equal or greater than Vcc. For extremely low temperatures, the thermistor resistance will increase, consequently increasing the voltage across the thermistor. However, V_analog will never drop below or be equal to the offset voltage (3.4 V in this case). Consequently, V_analog will always be contained between Vcc (5 V) and the offset voltage (3.4 V).

6.2 Prototype #3 design

In this final prototype, the system was simplified and the design was improved. Figure 18 shows the new model.

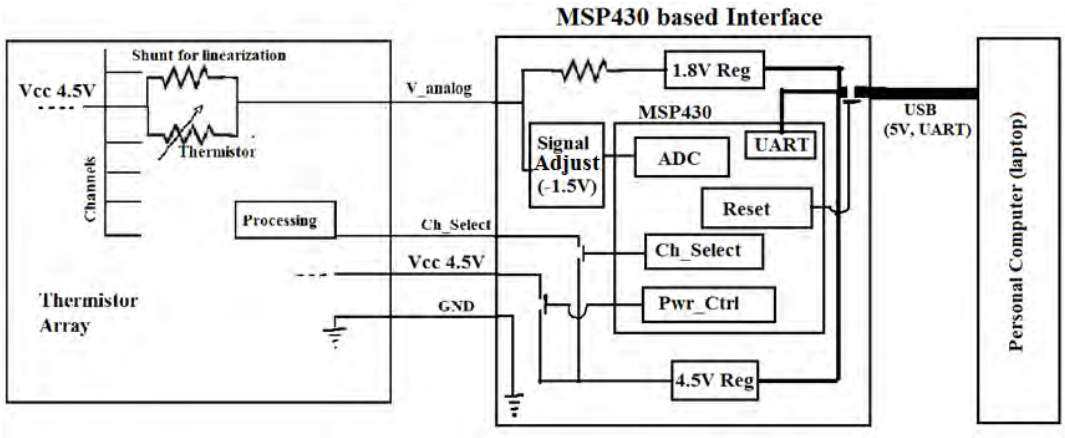

Figure 18. Simplified model of the improved system design

6.2.1 Observation, Discussion and Reasoning

The new MSP430-based interface design has five principal modules:

- **MSP430 Microcontroller**: Used for control and processing (UART communication, Channel Select and Reset functions, ADC processing, etc.)
- **USB interface**: To accommodate physical connection between the board interface and a personal computer. The MSP430 based interface board gets powered and also communicates with a personal computer (UART Communication) through the USB interface.
- **Signal adjusting:** This module is composed by different components serving the purpose of adjusting the analog signal before it reaches MSP430's ADC. As discussed, V_analog is always contained between Vcc and the offset voltage. For this specific design, V_analog is contained between 4.5 V (Vcc) and 1.8 V (note the change from the original design). Adjusting this signal by subtracting 1.5 V gives a signal ranging from 3.0V to 0.3V suitable for the MSP430F5438A microcontroller.
- **Voltage regulations**: Voltage regulators provide necessary voltage for specific tasks. 4.5V is used for both powering the thermistor array and to generate the Select Channel signal. 1.8V is used to generate the offset voltage required for temperature measurement.

  4.5 V was chosen to avoid inaccuracies that could be caused by the use of different personal computers. Although the standard voltage expected out of a USB connection from a personal computer is 5 V, this value can slightly change from one computer to another, consequently affecting the accuracy of conversion. The voltage of 4.5 V was chosen assuming that even the computer providing the lowest voltage through USB will still provide more than 4.6 V, which would be high enough to generate 4.5 V using our low dropout voltage regulator.

Two constraints have dictated the choice of 1.8 V for the offset voltage:

- Firstly, a wide range of V_analog was favored. With V_analog ranging from 1.8 V to 4.5 V, it gives a range of 2.7 V for the measurement span versus the original system ranging from 3.4 to 5 V yielding a range of only 1.6 V.
- Secondly, considering the V_analog adjustment, the offset voltage had to be high enough so that when V_analog is adjusted by subtracting 1.5 V, the adjusted signal stays within a practical range of the MSP430's ADC (0 to 3.3V).

- **Reference voltage generation:** This module consists simply of a series of high-precision voltage dividers that generate various reference voltages used throughout the design.

Notice that there is neither a module for linearization (since it is already done inside the thermistor array), nor a separate module for calibration (since the calibration is mostly achieved through the software).

6.2.2 Details of Prototype #3 Hardware Implementation

6.2.2.1 MSP430 Microcontroller

Texas Instruments MSP430 F5438A microcontroller was used for this project. The microcontroller is powered by 3.3 V generated by the USB interface (CP2102). One of the reasons MSP430 was selected is because the system can be implemented using a very small number of external components – a JTAG connector for programming, a 32768 Hz crystal for the clock, and several necessary pins for UART (USCI_A1) and ADC12 modules. Few other pins are also wired for diverse functions including Reset, channel select, power control, and few others for debugging purpose (clocks, several signal test points, etc.). More details about the MSP430 F5438A microcontroller hardware implementation of the microcontroller can be viewed in the schematic diagram in Appendix E.

6.2.2.2 USB Interface

The USB interface is mainly composed of a USB-B shield connector and a CP2102 USB to UART bridge chip. The USB-B shield connector enables physical connection between the MSP430 based interface board and a personal computer, with a USB-B connector on the board's side and USB-A connector on the computer side. More details about the hardware implementation of the USB interface can be viewed in the schematic diagram in Appendix E.

6.2.2.3 Voltage Regulation

The objective of the voltage regulation components is to generate constant voltage desired for diverse purpose. Constant 4.5 V is used to power the thermistor array and to generate a timed pulse that serves as Channel Select signal. Both the power and Channel Select signal are controlled through analog switches by 3.3 V signals generated from MSP430 (also a part of a new design). Constant 1.8 V is used for calibration purposes, to enable accurate measuring of the V_analog signal.

During testing, a single bilateral analog switch (SN74LVC1G66) was used, while the 1.8 V and 4.5 V were generated from an external power supply. When the final board (prototype #3) is populated, all of these voltages will be generated by the interface board.

MIC5219 Adjustable Regulators in a SOT23-5 package were used in the PCB design to generate both 4.5 V and 1.8 V voltages. They were selected based on their low dropout voltage, typically 10 mV for I_{OUT} less than or equal to 100 µA, and for a convenient package for soldering. They can provide up to 1.5 A of current, which is way more than enough for our design. Figure 19 shows the circuit schematic for the MIC5219 Adjustable Regulator and the formula for output voltage configuration.

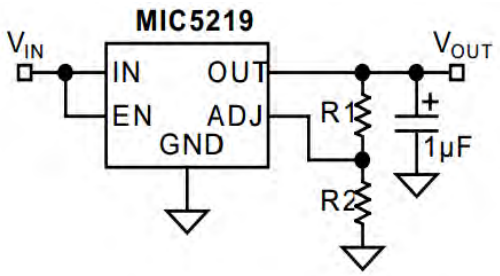

$$V_{OUT} = 1.242V\left(\frac{R2}{R1}+1\right)$$

Figure 19. Low-Noise Adjustable Voltage Regulator

For the switches, we used the SN74LVC1G66 Single Analog/ Bilateral Switch in a SOT23 package. Figure 20 shows the logic diagram for the switch. Although not mentioned in the data sheet a pull down resistor is required for these switches to work in our design.

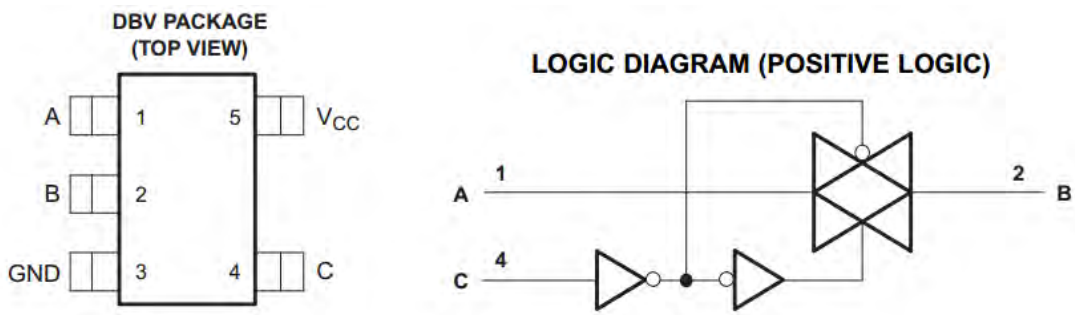

Figure 20. package (SOT23) and logic diagram of the SN74LVC1G66 switch

6.2.2.4 Signal adjusting

As discussed above, V_analog is contained between Vcc and the offset voltage which in this case are 4.5 V and 1.8 V respectively. The adjusting circuitry subtracts 1.5 V from V_analog to obtain a signal that ranges from 0.3 V to 3.0 V, which is a voltage range suitable for the MSP430 ADC's module using a 3.0 V external reference. Figure 21 shows the implementation of the signal regulation using a difference amplifier. (Note: In Figure 21, with R1 = R2 = R3 = R4, V_analog (adjusted) = V_analog – 1.5 V)

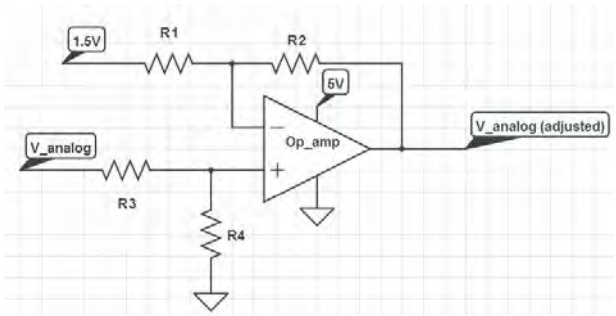

Figure 21. Circuit schematic implementing a difference amplifier used for signal adjusting

For the PCB design, ORNTV25K/25K Vishay 5-reistor (25 kΩ each) Voltage divider SO08 package was used for more precision, while the OP2727 Dual Rail-to-Rail OPAMP chip was used for the op_amp. It is powered by 5 V while the highest input signal is expected to be less than 4.5V; consequently it is assured that the device will not chop off the signal.

The signal adjusting module is preceded by a voltage buffer which prevents the resistors of the signal adjusting module to load the V_analog signal.

6.2.2.5 References Voltage generation (not shown on the simplified model)

Another important part of the current design consists of generating different reference voltages for diverse purposes. This consists mainly of providing 1.5 V used for V_analog adjustment and the 3.0 V reference voltage for the MSP430's ADC module. The configuration used is shown in Figure 22.

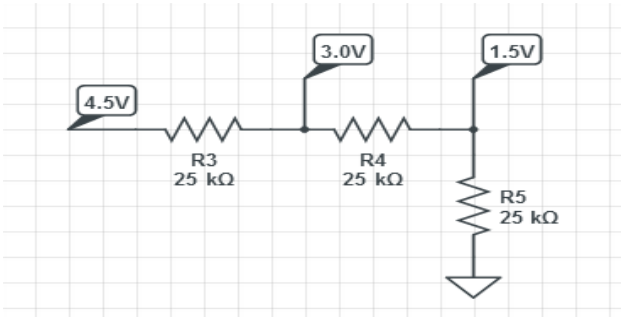

Figure 22. Voltage divider to generate reference voltages

For the PCB design, ORNTV2.0K/10K and ORNTV25K/25K Vishay 5-resistor Voltage dividers in SO08 package were used.

7 EMBEDDED SOFTWARE DEVELOPMENT

7.1 Objective

The objective of the software development was to create a simple program to allow the following functions:

- UART communications with the CP2102 UART bridge
- Sample and average the output of the interfaces analog front end on command from the UART and at time intervals specified through the UART communications.
- Send the calibrated temperature data to the connected computer through the UART interface.
- Allow the MSP430's real time clock's (RTC) date time group to be set through UART interface.
- Control the probe with the digital signals power control (POWER_CTL) and channel select (CH_SEL).

7.2 Design Procedure and Justification

The embedded program running on the MSP430 interface board was written in C, using CrossStudio 2.1 programming environment from Rowley. The program uses USB-based UART communication between a personal computer and the interface board. The baud rate is currently set to 9600, 8-bit, 1-stop bit, no parity, but it can go as high as 1 Mpbs if needed. In the current state of the project, the user needs to install any terminal program on the PC to enable a serial communication with communication ports.

In order to reduce measurement error, a Sequence-Of-Channels mode is used to collect 8 consecutive samples from each of the channels; the average of those measurements is calculated and used in calculations. The sampling time is set to 30 us. The program uses an external reference voltage of 3.0 V. The PCB was designed with an option of changing the reference voltages by placing a jumper to an appropriate connection. Other available reference voltages are 1.5 V and 2.0 V if the range of temperatures to measure or the instrument calibration change in the future.

The channel select pulse width is set to 150 ms (wide enough to ensure the change between consecutive channels), and an idle time of 200 ms before taking measurements. This delay prevents the measurements to be affected by a possible flickers occurring during channel changing. The idle time after each reset signal is 250 ms. If needed, these delays can be easily changed in the code.

Please refer to Appendix A for a complete code block diagram for the embedded program, including the ISR's.

Figure 23 shows a screenshot of the program running on a PC, with user input.

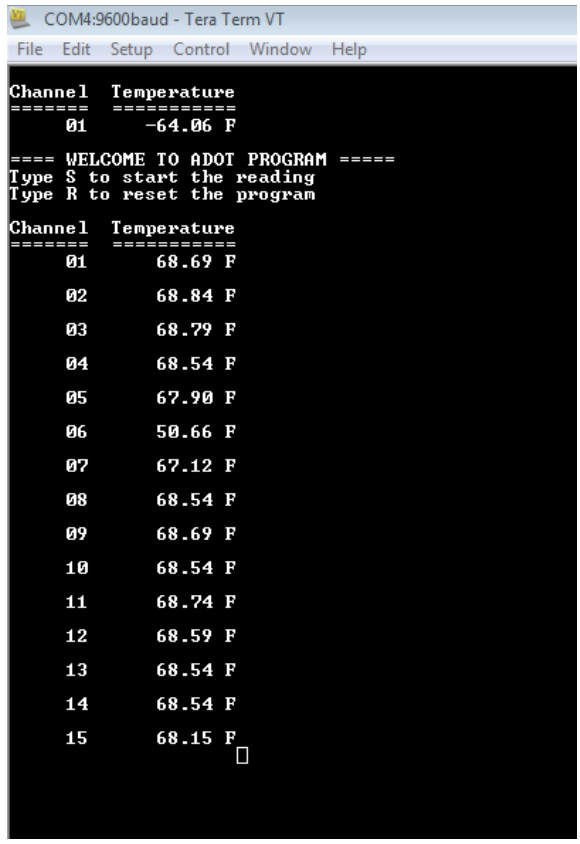

Figure 23. Screenshot of a terminal program displaying user interface and data format

7.3 Calibration and Testing

Testing the ADC code with an analog signal generated by a DC power supply and the actual probe subjected to different temperatures proved the external reference was correctly set.

UART communications and command parsing routines worked as expect. The string library functions greatly simplified the code.

Since it was proven that there is a linear relation between V_analog and the temperature measurements; the calibration consisted in solving a straight-line equation $y = m\,x + b$, with x being the V_analog processed value, and y being the corresponding temperature.

To solve a straight-line equation, two points of the line are needed. To find the coordinates of these points, the process consisted in generating different temperatures by either positioning an ice packet or blowing hot air using a hair dryer to a specific thermistor and wait for short period of time (3 minutes approximately).

Subsequently, the original RD100 device was used to measure and record the temperature. With the least delay possible, we would swap our interface board and the RD100 to measure and compare the temperatures and voltages. After recording the measurements from two different temperatures, the equation could be solved. Finally, to ensure the linearity of the relation, a third point

of temperature (room temperature) was taken to confirm that it lies on the line joining the two points previously measured. This experiment was repeated for various temperatures.

Based on measured data, the slope (m) was solved to be 56.1043 whereas the y-intercept (b) was found to be -52.8635. These values are the only change that could be made after the PCB for prototype #2 was already fabricated.

Because the PCB for the final design was not produced, the testing consisted of using the heavily modified prototype #2 PCB, with additional components added using a breadboard. Although this testing should provide results very similar to the ones that would obtained using the final board, some refining might be required in software for the final calibration because of possible slight difference in components values and last-minute changes. Figure 24 shows the testing of the system consisting of a modified prototype #2 board and additional components on a breadboard.

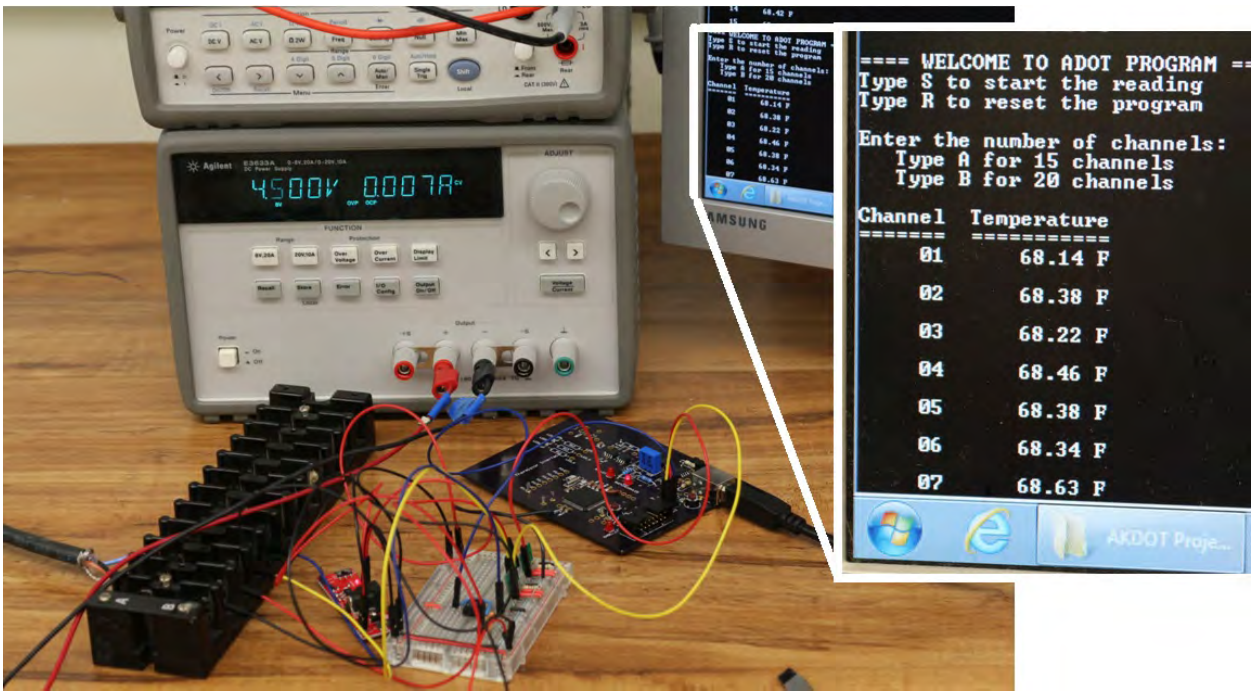

Figure 24. Modified prototype #2

The testing did not cover the entire range of temperatures where the product might be used. The initial testing was done for temperature ranging from 44 F to 98 F. The testing was hindered the lack of time and by limited possibilities of generating desired temperature, especially temperature below 40 F. As discussed in Section 8, additional testing in a cold room would be required.

However, for the testing performed the prototype worked flawlessly.

7.4 Printed Circuit Board Design

The printed circuit board was designed using EAGLE 6.4.4 software. The selection of components was based on availability, size and practicability in soldering. All the capacitors used are

surface mount with C1206K packaging; all the resistors used are surface mount with M1406 packaging. Figure 25 gives a big picture of the PCB layout. More details can be found in Appendix E.

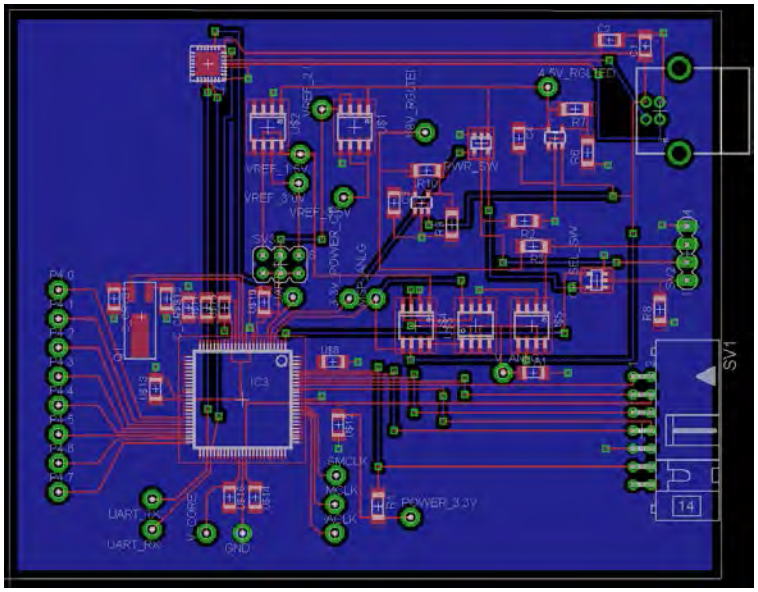

Figure 25. PCB layout (Prototype#3)

Some details such as the spacing between connections or the connection width might be changed depending on the manufacturer selected to produce the final board.

8 Future Work

The research performed in this project allowed us to become familiar with the equipment used for temperature monitoring on Alaska roads. While challenging in the beginning, because of the age of the equipment used, we managed to create a solid knowledge basis for future research. These are the main proposed topics for further research and development:

- Further testing of Prototype #3, using either a cold room at the Geophysical Institute or the temperature-controlled chamber in Duckering building.
- Final implementation of the device, which would include populating the final board, placing it into an enclosure practical for the filed work, and developing a more user-friendly PC software.
- Developing a cheap wireless device that can be left on various sites throughout the state, to allow for easier data readouts.
- Improving the interface to allow real-time or near-real-time long-distance monitoring through a combination of cellular, WiFi, and wired connections, where infrastructure permits.

APPENDICES

Appendix A – Embedded Software Block Diagram

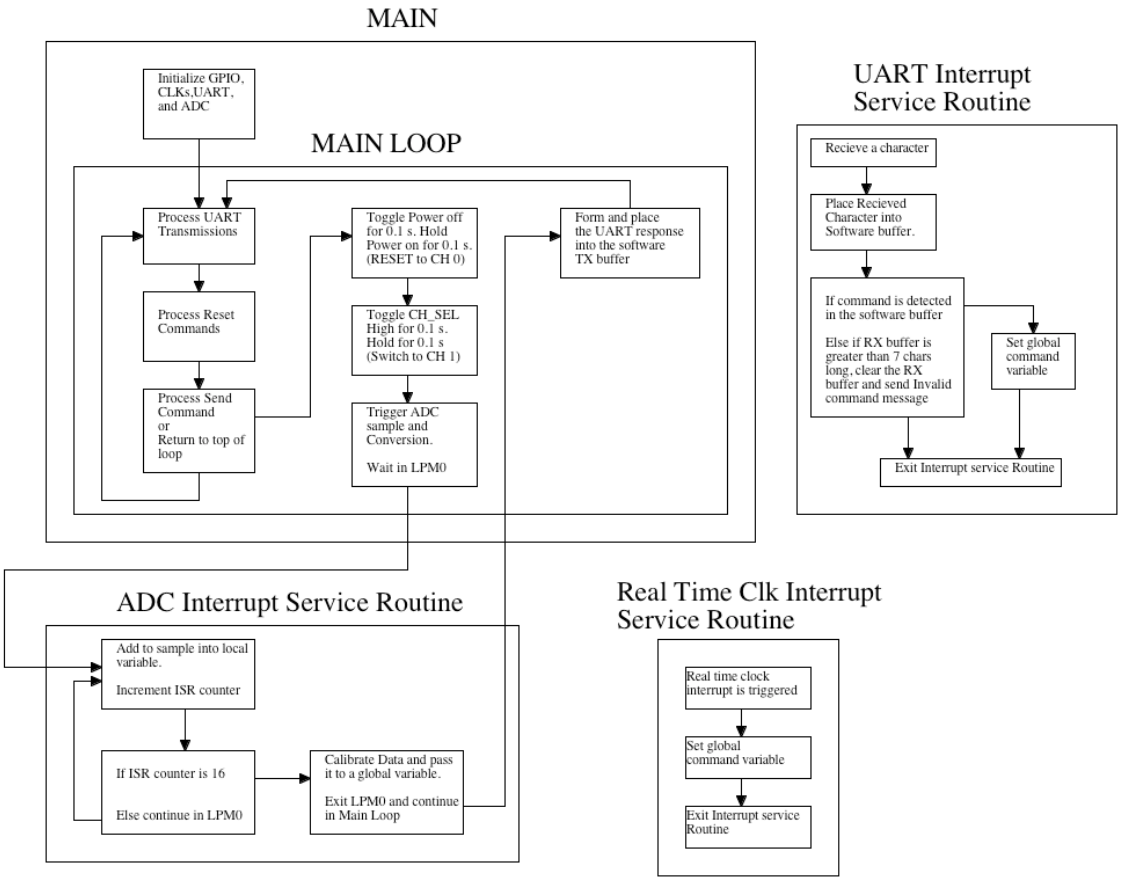

Figure A. 1 Embedded software block diagram

Appendix B – Command List

1.) Send microcontroller time
2.) Set microcontroller time
3.) Send interface physical ID (Location descriptor)
4.) Set interface physical ID
5.) Set real time clock sample rate (i.e. 6 times a day at 4 hour intervals)
6.) Send data from Time 1 to Time 2
7.) Sample and send current temperatures
8.) Reset the probe
9.) Reset the interface
10.) Set interface dependent calibration fudge factor

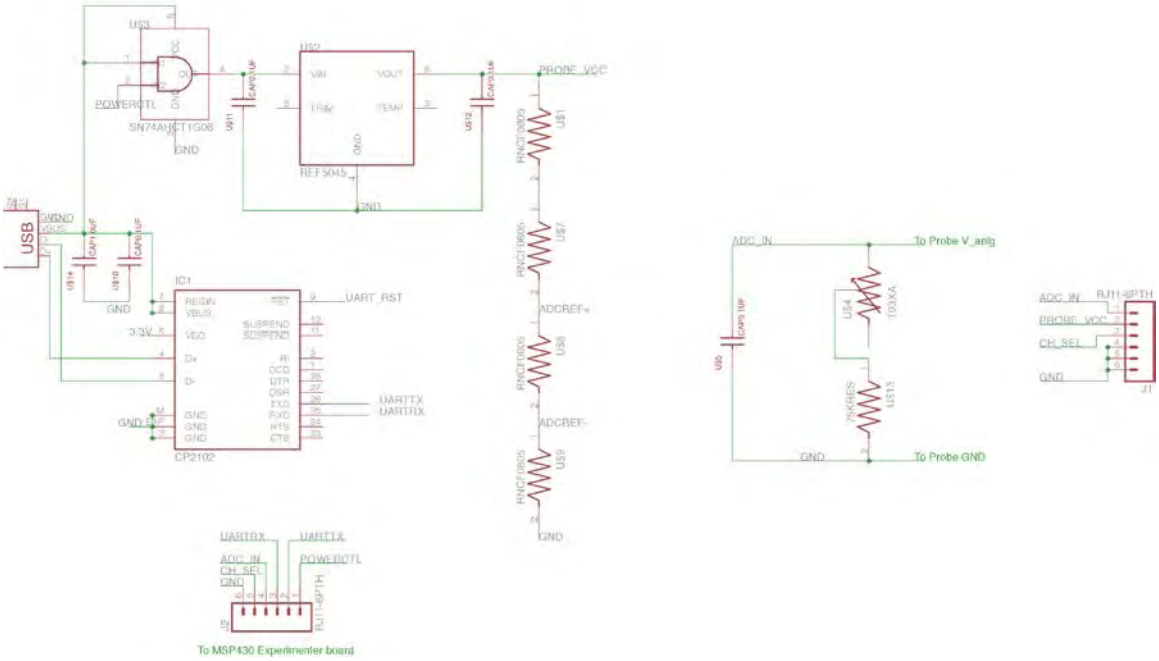

Figure C. 1: Prototype #1 Schematic Diagram

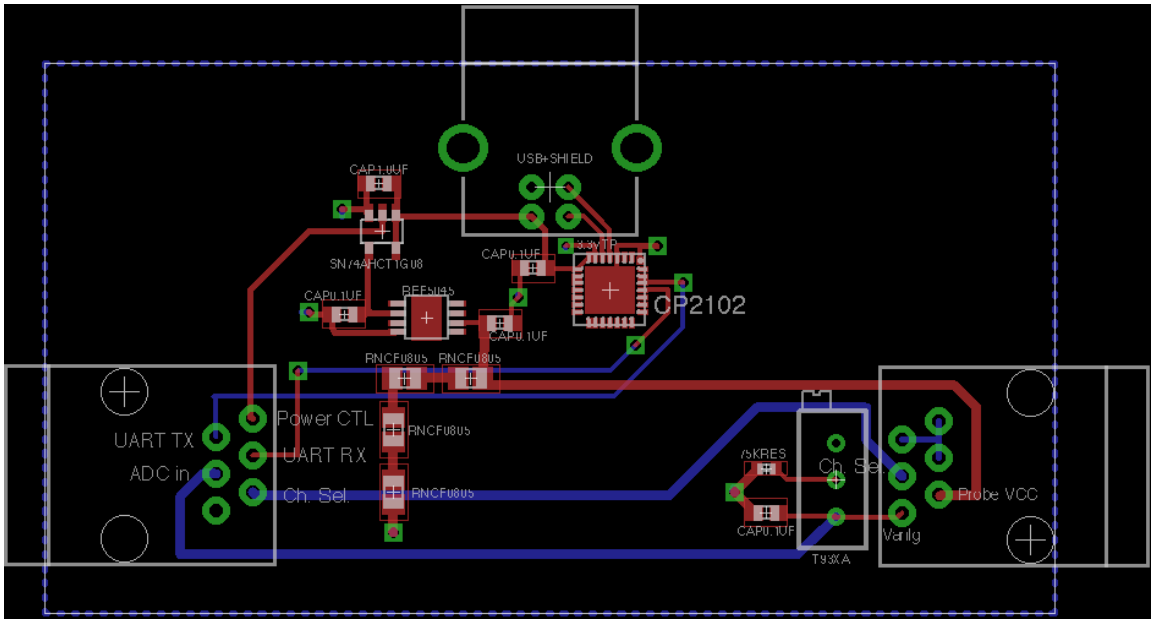

Figure C. 2: Prototype #1 board layout (representative only)

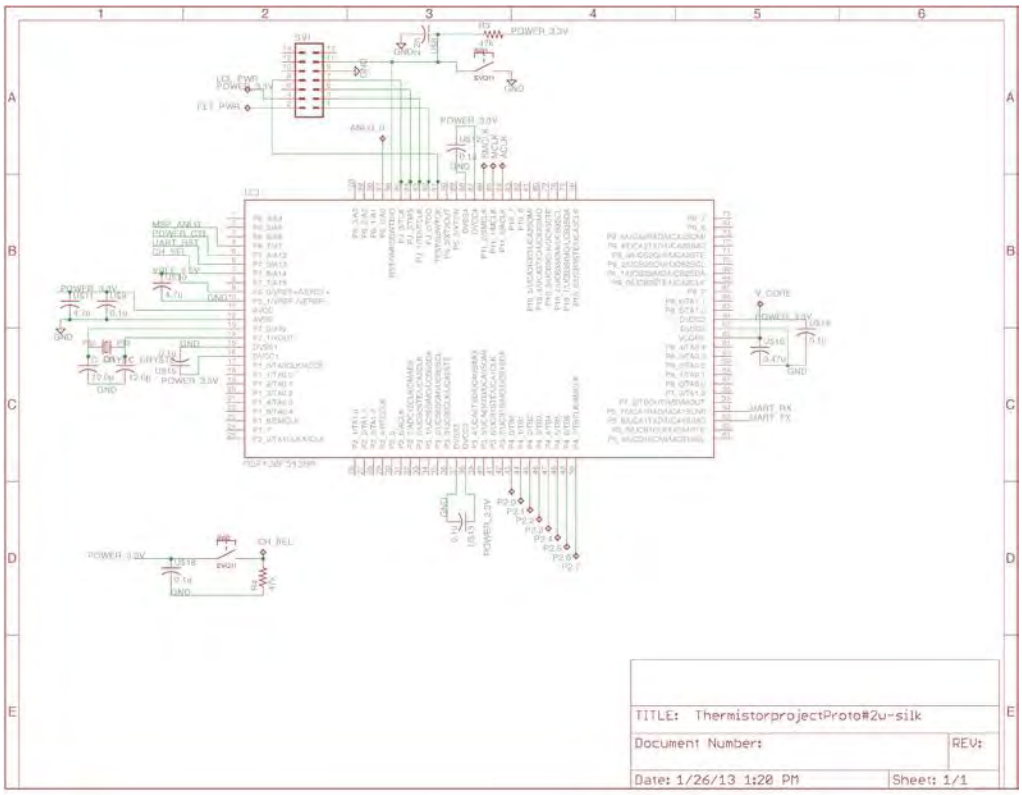

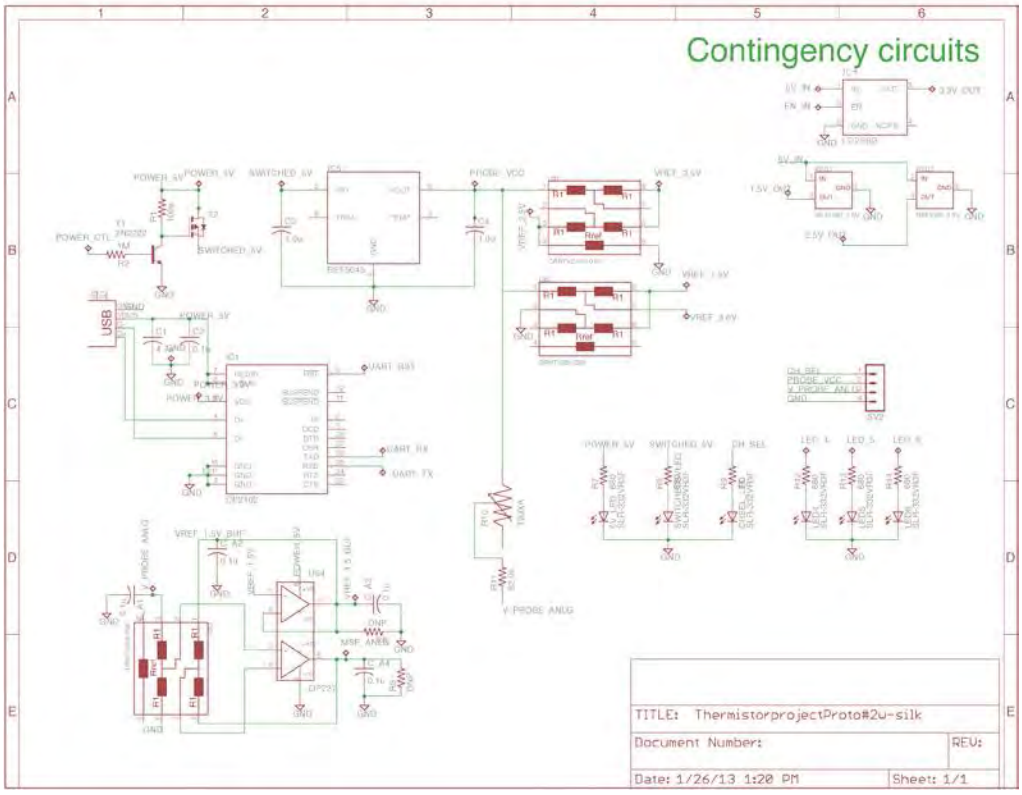

Figure D. 1: Prototype #2 schematic diagram

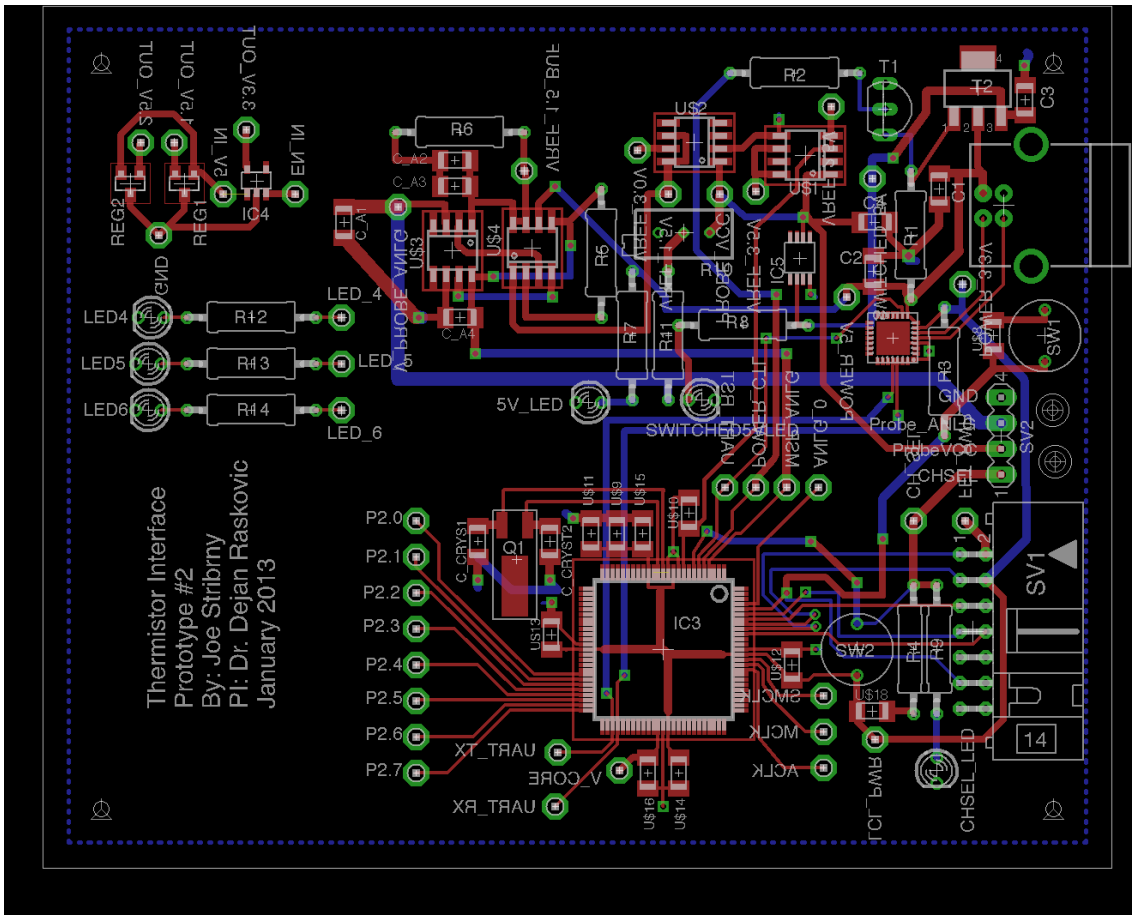

Figure D. 2: Prototype #2 Board Layout

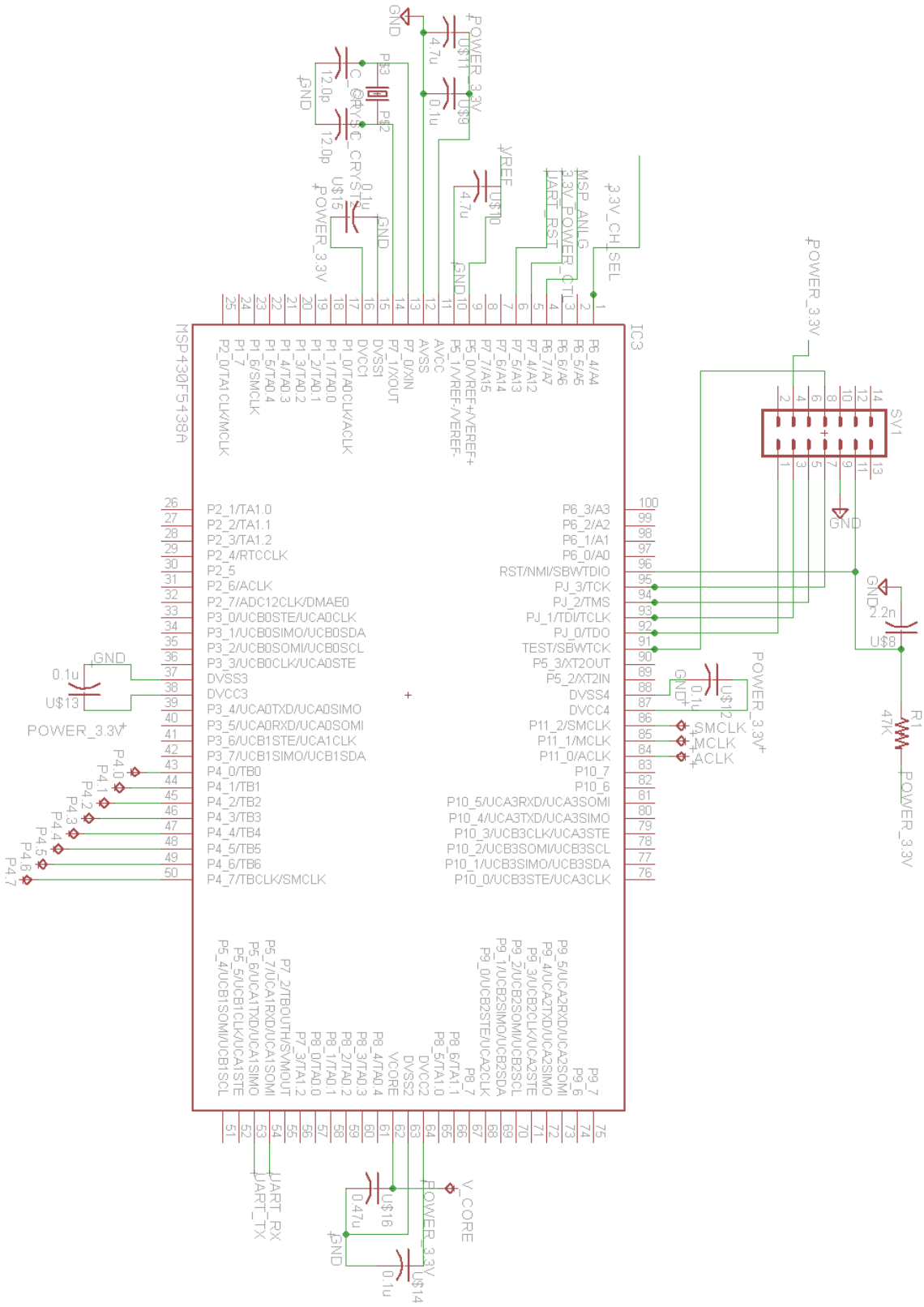

Figure E. 1: Prototype #3 schematic diagram - microcontroller

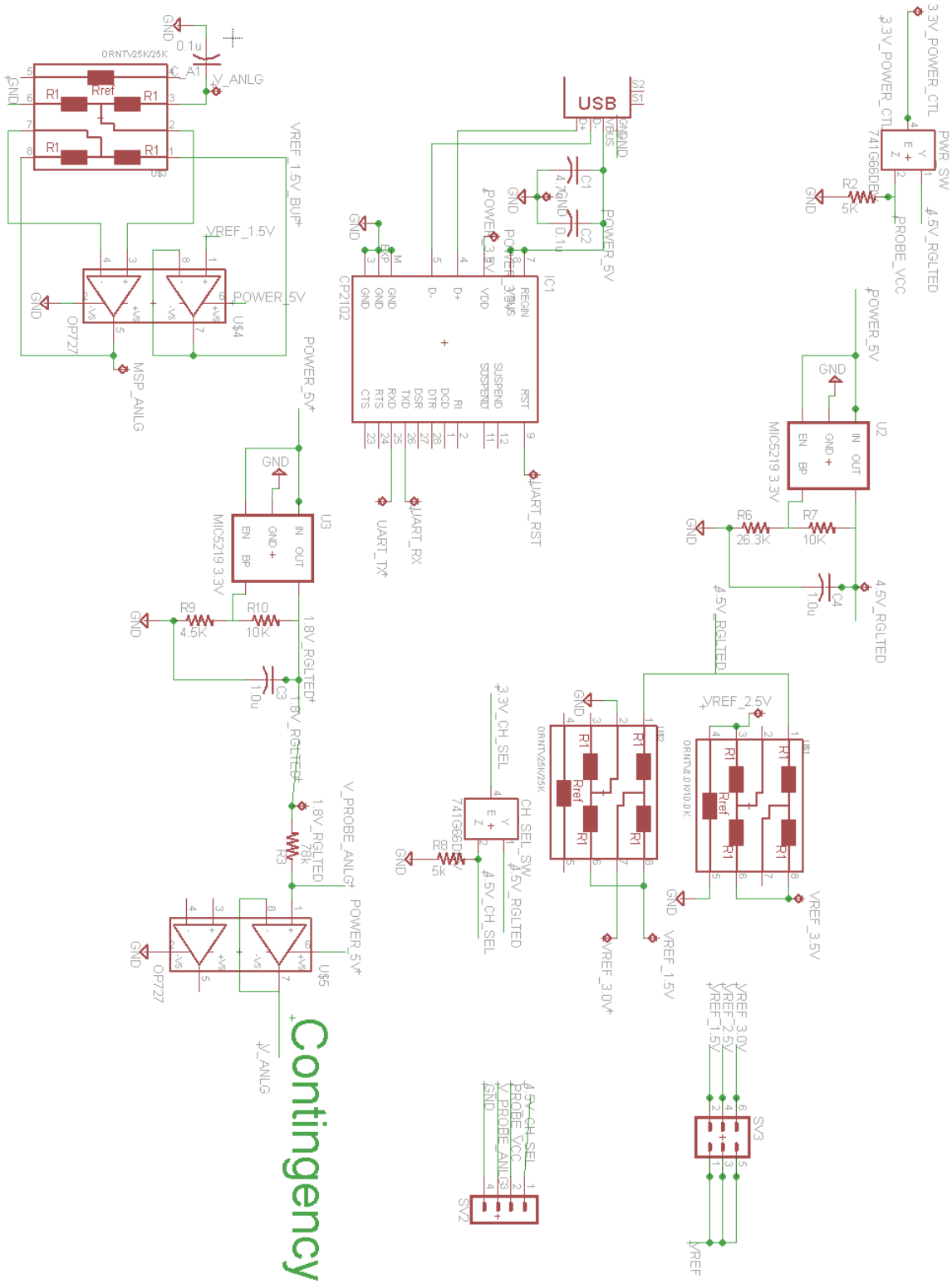

Figure E. 2: Prototype #3 schematic diagram – communication, signal conditioning, and power

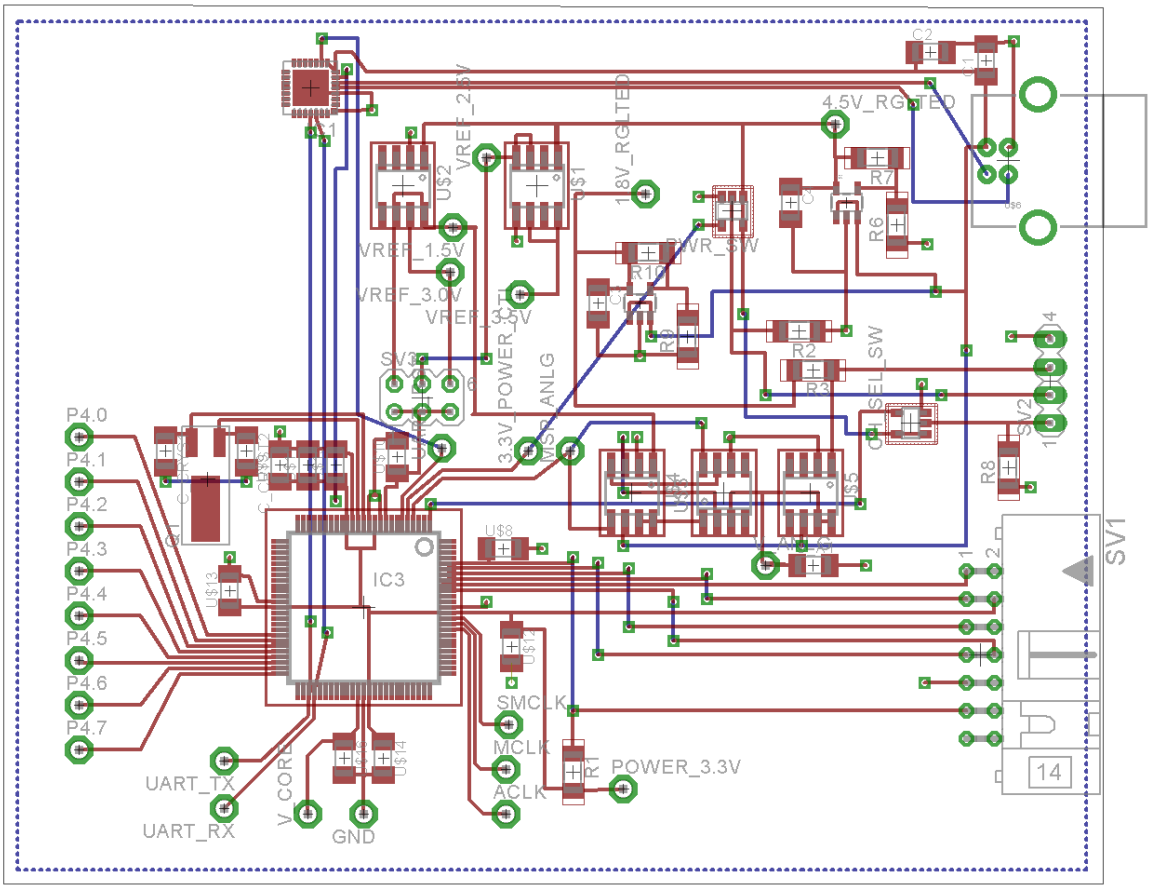

Figure E. 3: Prototype #3 Board Layout