VORTECH CMCC
CONTACT MECHANICS COMPUTING AND CONSULTING

A history with water

Use of simulation in another industry

Edwin Vollebregt

FRA workshop, June 30, 2015

Who we are

Highly skilled people: Simulation – Numerical analysis – Software engineers

Scientific software development

Areas of expertise:

- Good modeling practice
- Numerical analysis
- Combining models and data
- High performance computing
- Software engineering

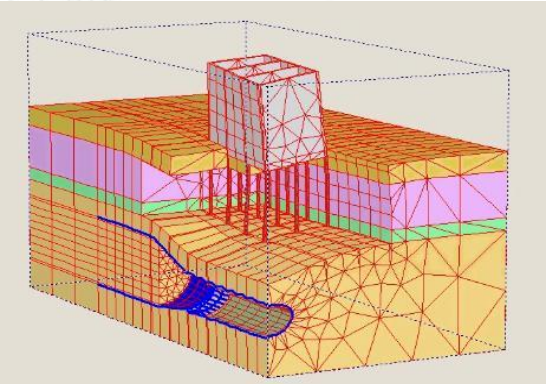

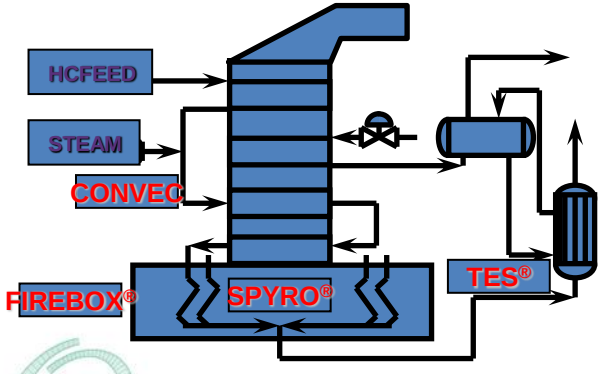

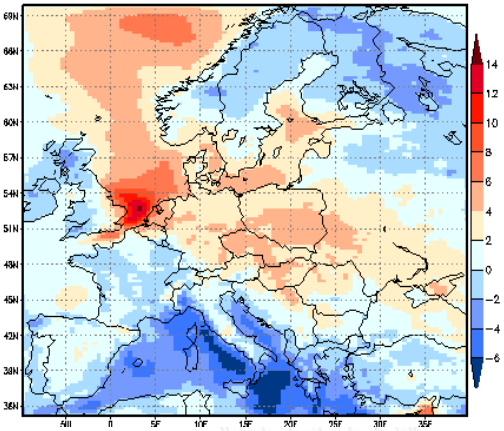

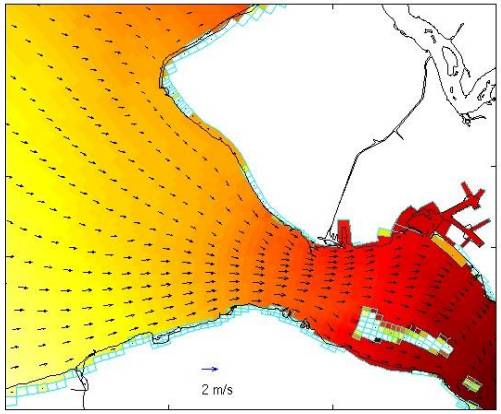

VORTECH CMCC
CONTACT MECHANICS COMPUTING AND CONSULTING

Contact mechanics – computing & consulting

Products & services:

- Research projects
- Custom software development
- Standard software products
- Training & support

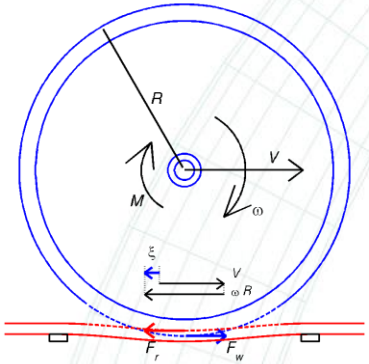

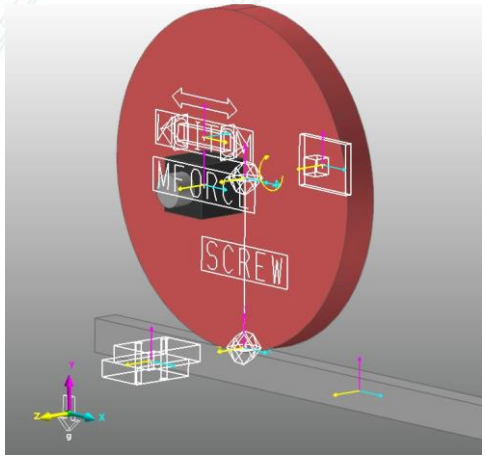

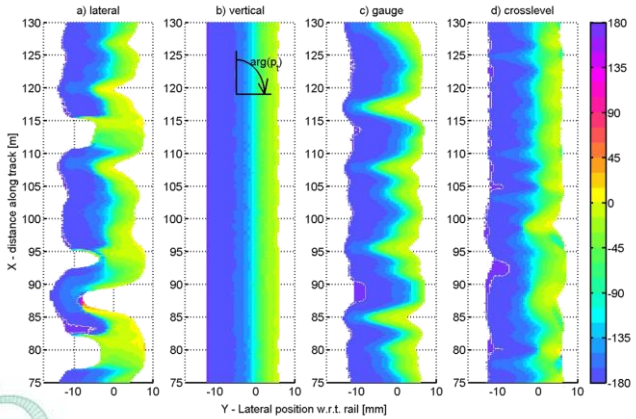

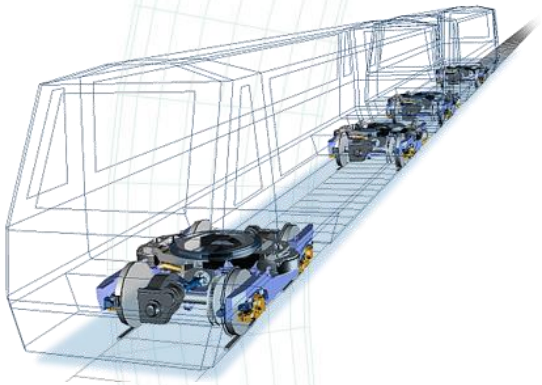

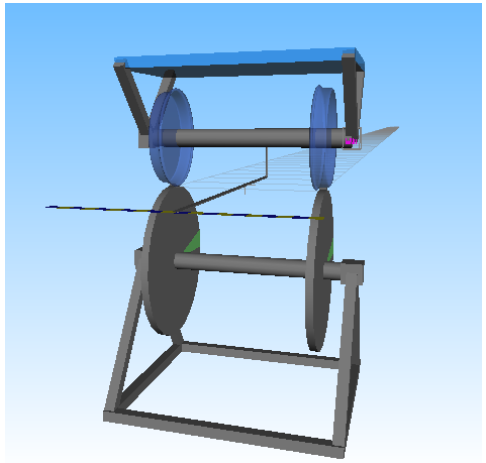

VORTECH CMCC
CONTACT MECHANICS COMPUTING AND CONSULTING

A history with water

Simulation of coastal areas

A brief history of fluid mechanics:

- 1687 – Newton's laws of motion
- 1738 – Bernouilli's principle
- 1753 – Euler's laws for inviscid flows
- 1822 – Navier-Stokes equations
- 1871 – (Saint-Venant) shallow water equations

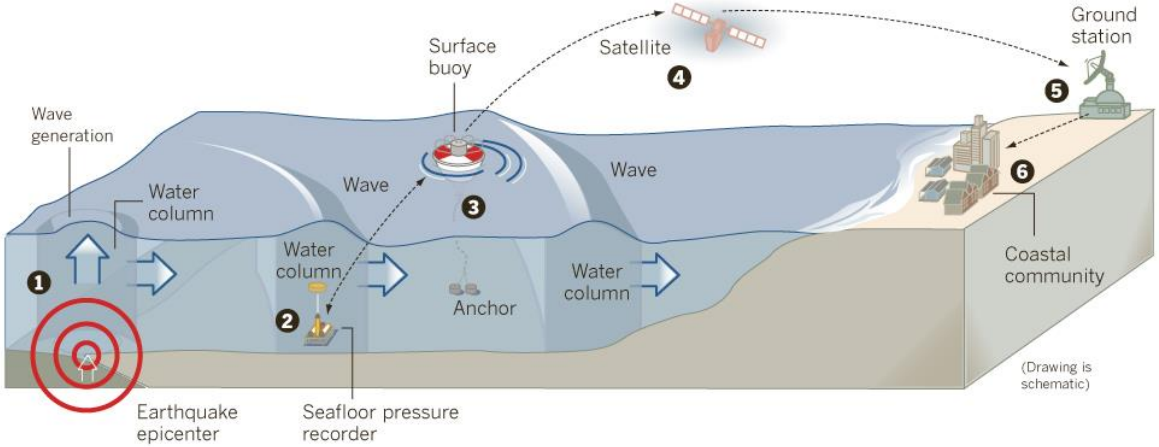

Hendrik Antoon Lorentz (1853-1928)

After floodings in 1916, the “Staats-commissie Zuiderzee” was established.

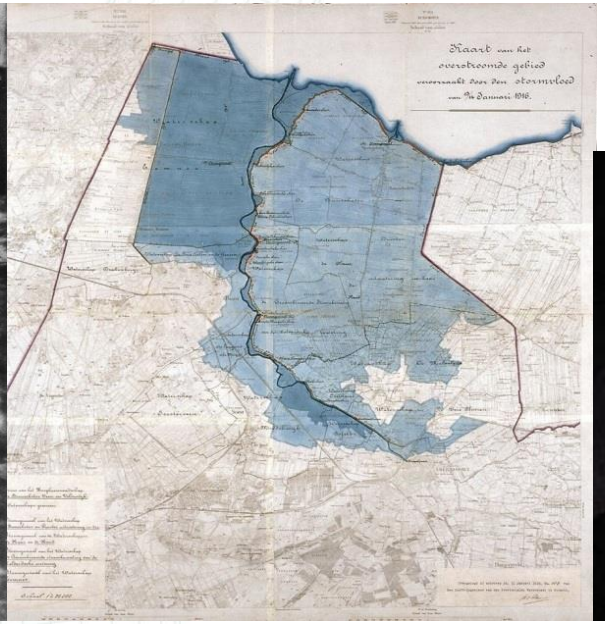

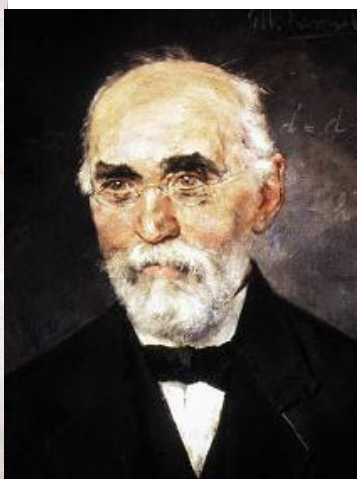

Construction of the “Afsluitdijk” (1932)

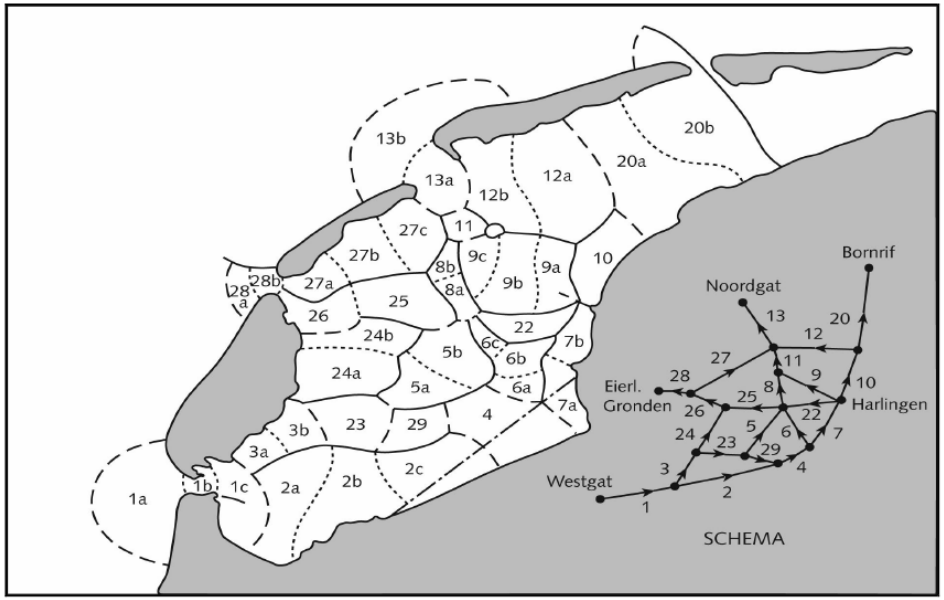

Observation 1:
A model is more than a set of equations – comprises all that’s used to get the result.

1953 – The “Watersnoodramp”

1836 casualties in The Netherlands

1956 – 1997: The Delta Works

ASCE – “One of seven modern wonders of the world”

Investments in modeling & computer simulation

- Predicting tidal flows
- Leendertse, Stelling

Observation 2:
Models reveal what is hidden – make the invisible visible.

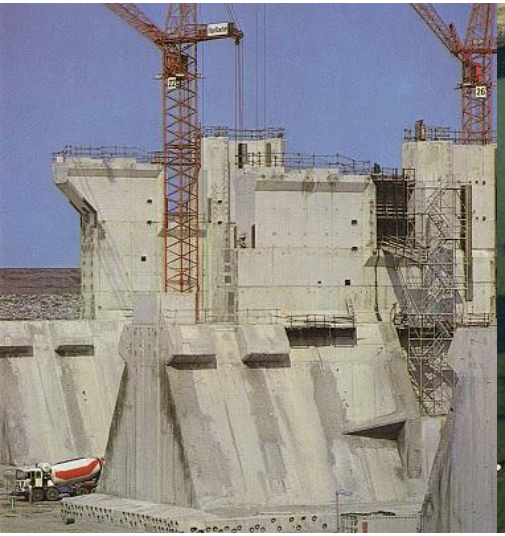

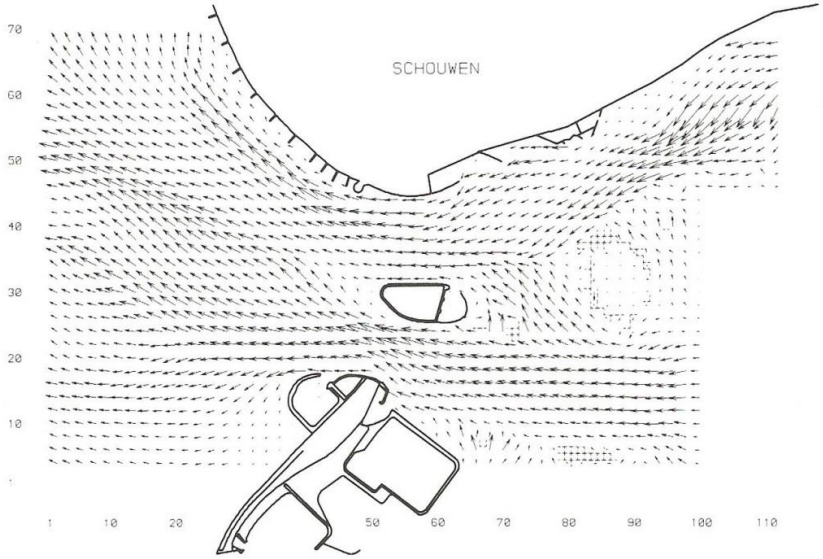

Port of Rotterdam

- World's largest from 1962 to 2004, now 4th
- 7% of NL gross domestic product

Guidance of shipping

- Safety concerns
- Economic value

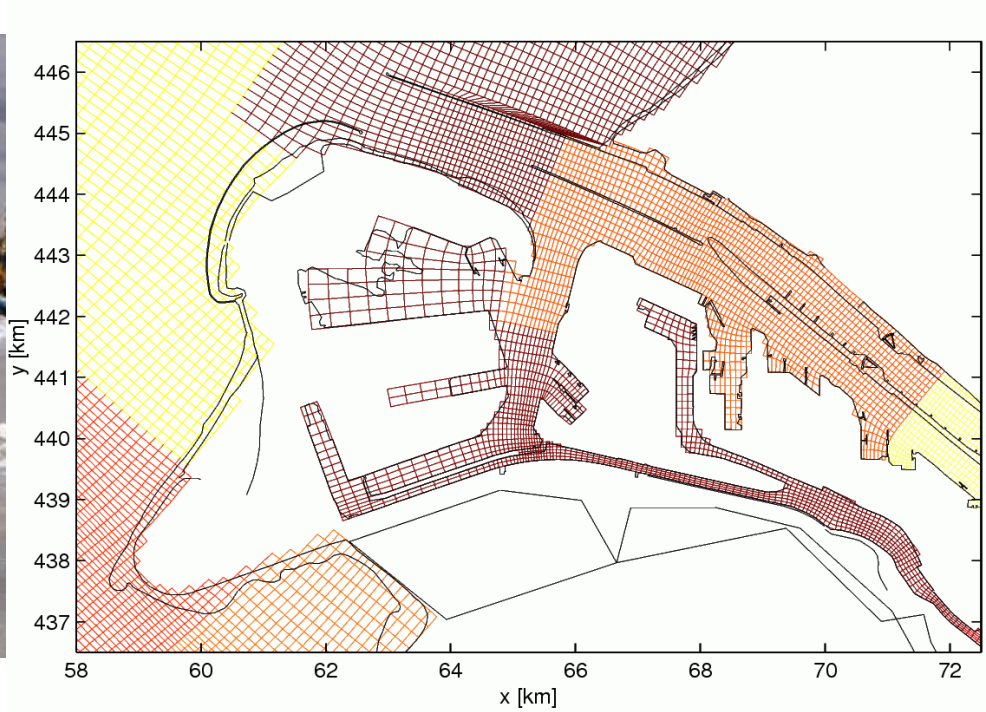

Needs 3D modeling

Flow velocity varies with depth

- depending on salinity, turbulence

Observation 3:
A model does what it is taught to do – is limited by the assumptions made.

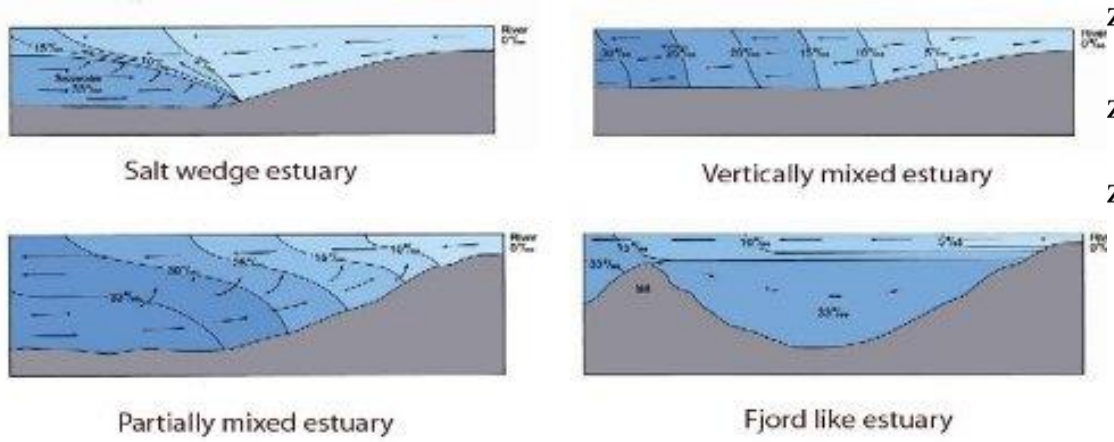

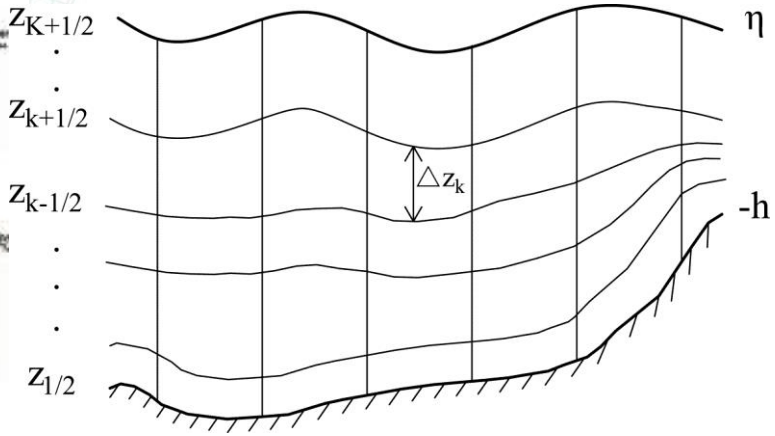

Operational storm surge forecasting

Rijkswaterstaat – models run every 6 hours, every 3 hours in storm situations

Combining models with measurements

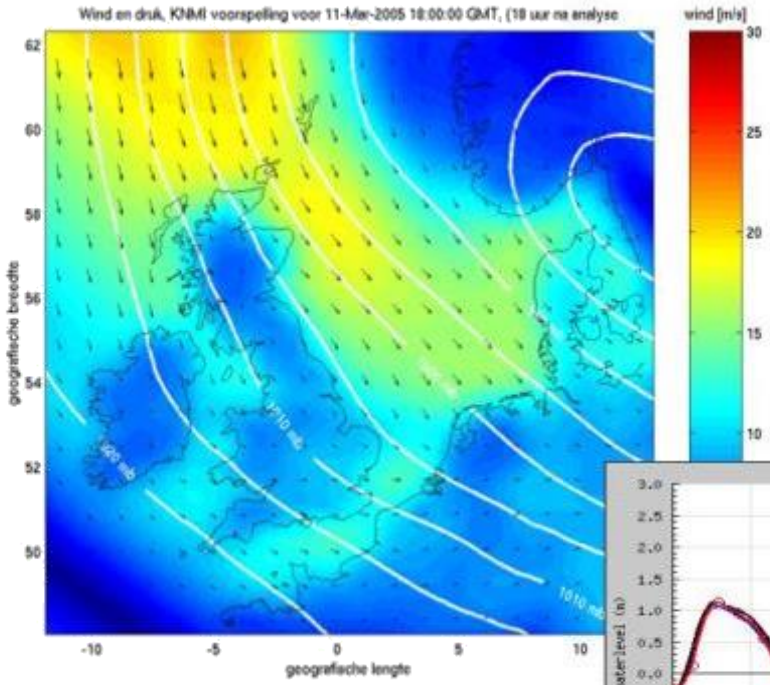

Weather forecast from KNMI

- Wind accurate up to 2 m/s

Observation 4:
Garbage-in-garbage-out –
data quality determines model value.

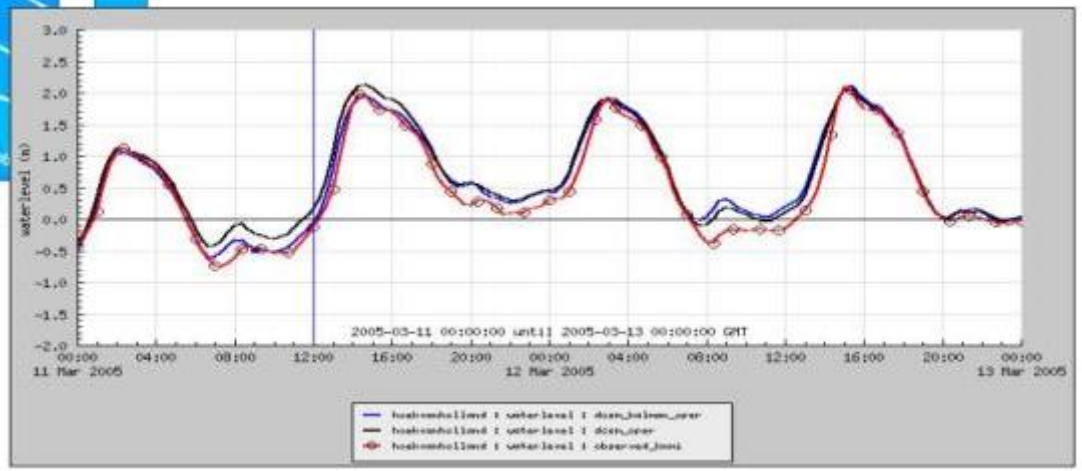

Simulation for coastal engineering

Over the years, major simulation capabilities were realized.

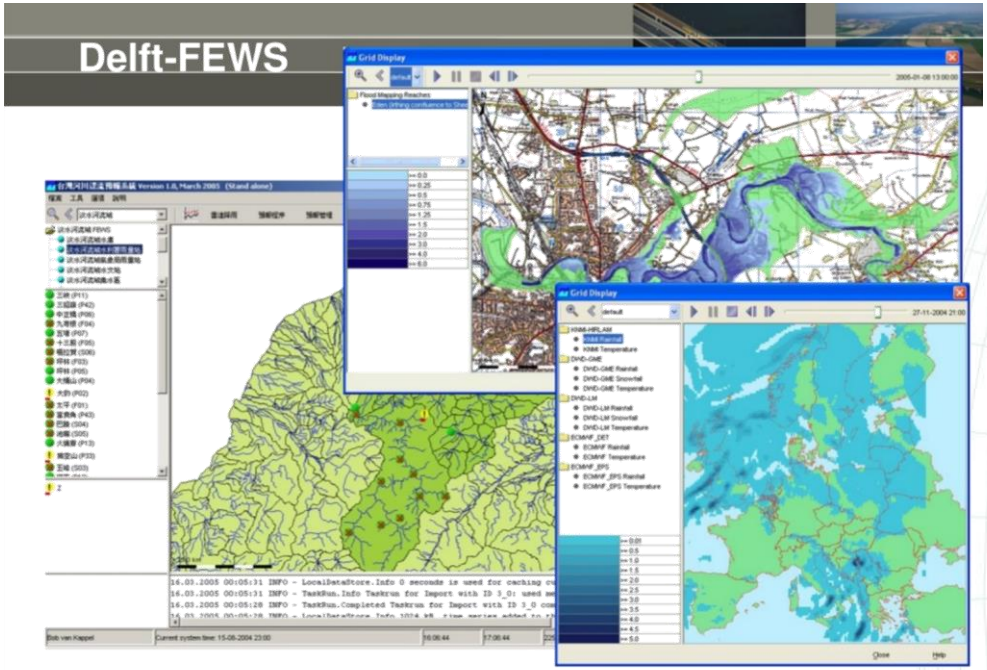

Observation 5:
Long-term efforts were needed – where there's a will there's a way.

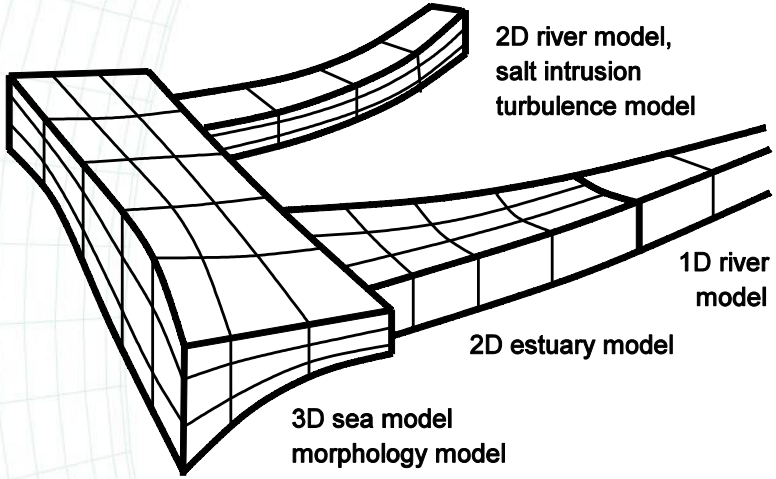

Deltares

VORTECH CMCC
CONTACT MECHANICS COMPUTING AND CONSULTING

April 27th – King’s day

Part II – Simulation for railway engineering

Complexity of the vehicle-track system (Zhai, 2009):

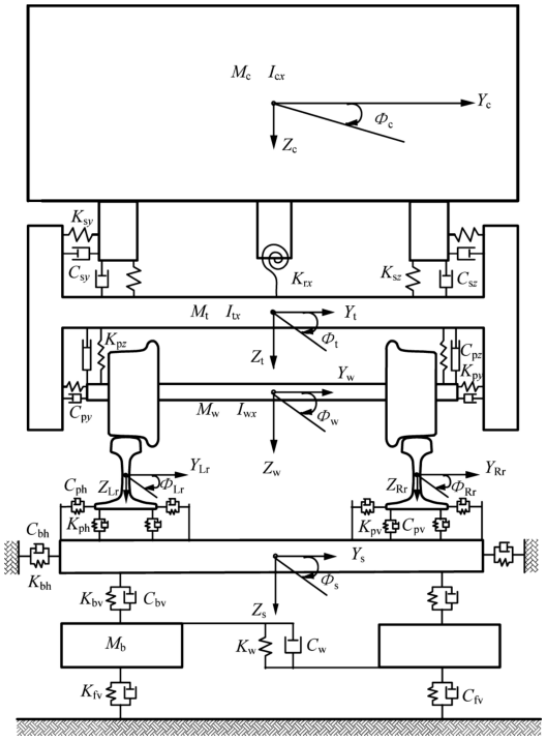

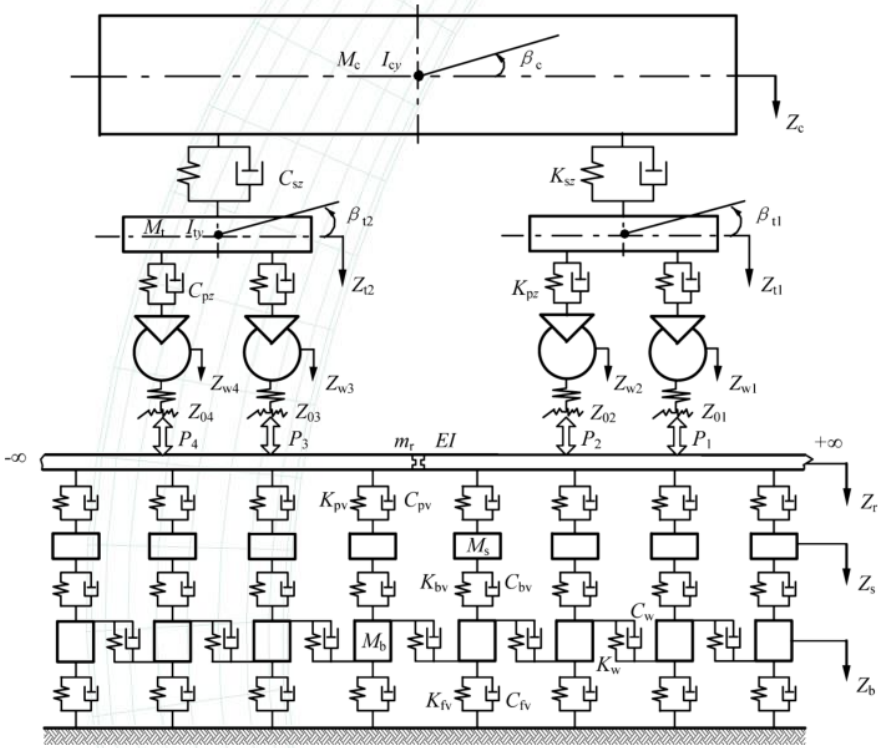

Observation 2 – value of modelling

The value of modelling is indisputable

- Understanding of hunting motion
- Improved vehicle design, e.g. safety, ride quality

Virtual homologation is within reach

Observation 2:
Models reveal what is hidden – make the invisible visible.

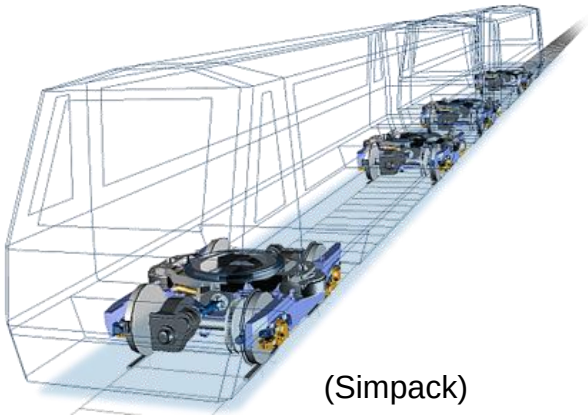

(Simpack)

Observation 2 – value of modelling

Current multi-body systems were mainly developed for vehicle design

- Works well for low frequencies
- Global level of forces & accelerations
- Global understanding of wear and RCF

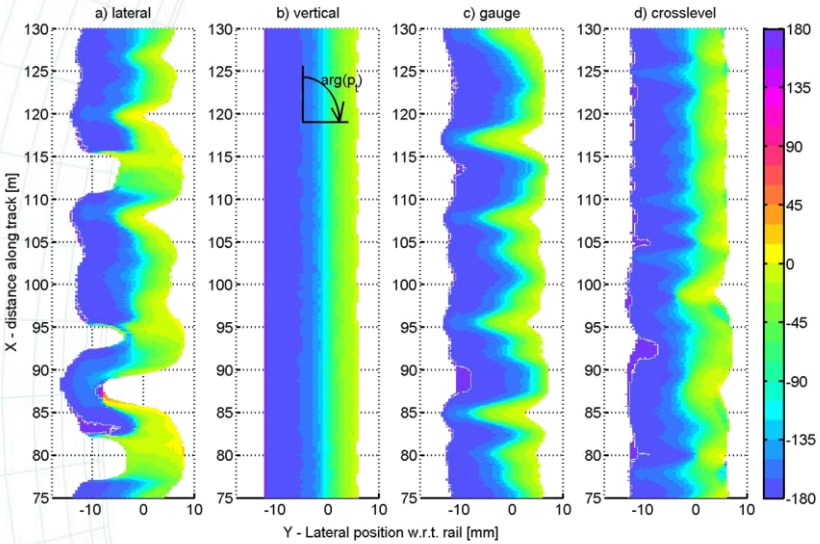

(Steenbergen & Vollebregt, 2015)

Observation 2:
Models reveal what is hidden – make the invisible visible.

Observation 3 – current restrictions

Higher frequencies less well-developed

- Effects of track irregularities

Needs good support for track flexibility.

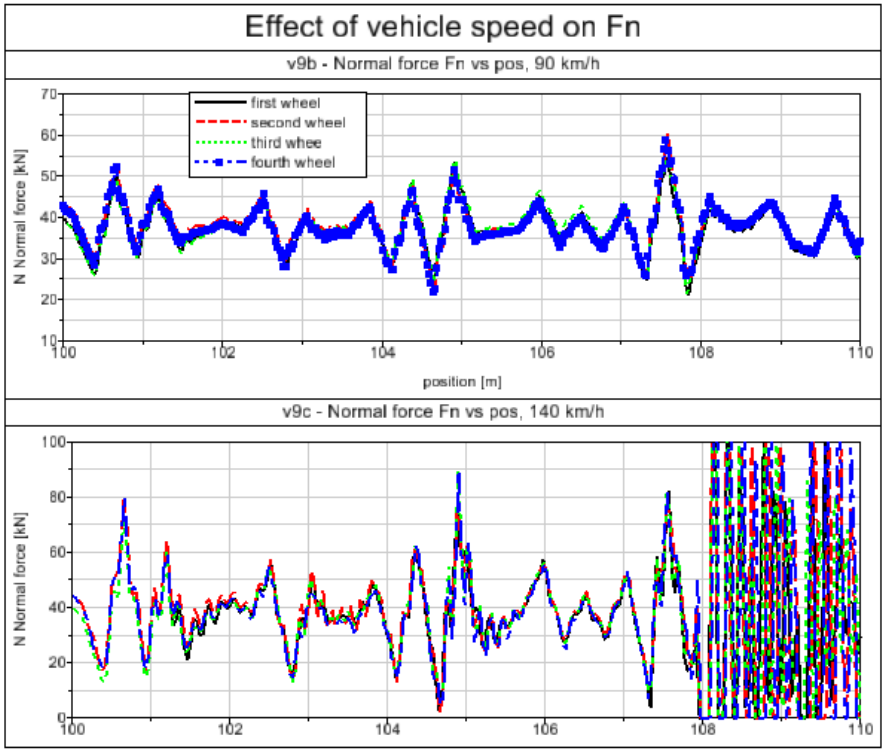

Observation 3:
A model does what it is taught to do – is limited by the assumptions made.

Observation 3 – current restrictions

More complex contact scenarios

- Rail deflection & roll
- Worn wheel & rail profiles
- Conformal contact geometry
- Friction modifiers, 3rd body layer

Needs integration of detailed contact models in MBS.

(Kerchof, 2013)

Observation 3:
A model does what it is taught to do – is limited by the assumptions made.

Observation 3 – current restrictions

More complex contact scenarios

- Transient effects behave differently than understood currently.
- Highly relevant for corrugation and RCF, derailment as well.

Needs integration of detailed contact models in MBS.

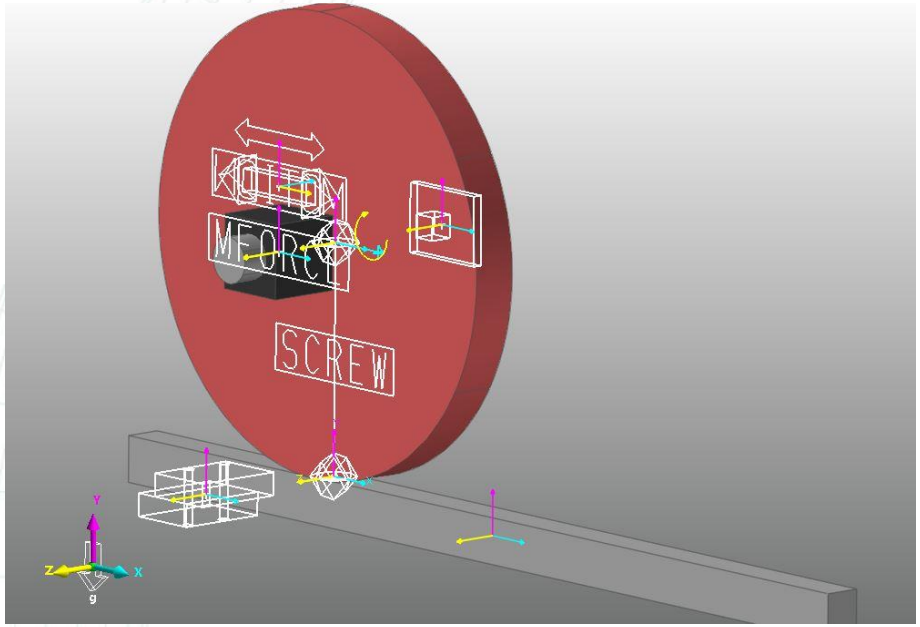

(Vollebregt, 2015)

Observation 3:
A model does what it is taught to do – is limited by the assumptions made.

Observation 4 – data needs

Simulating a field test or derailment requires detailed data:

- Data of actual vehicle: true stiffness, wheel profile data
- Data of actual track: alignment, soil characteristics
- Friction data: weather conditions, lubrication state

Many sensor data may be obtained and compared to model results.

Observation 4:
Garbage-in-garbage-out –
data quality determines model value.

Observation 5 – big efforts are needed

Many improvements are possible by computer simulation:

- Where do cracks develop, related to track geometry?
- How large are the track forces, breaking the rail?
- What are the reasons for track (geometry) degradation?
- Which vehicles or wheels are the most damaging?

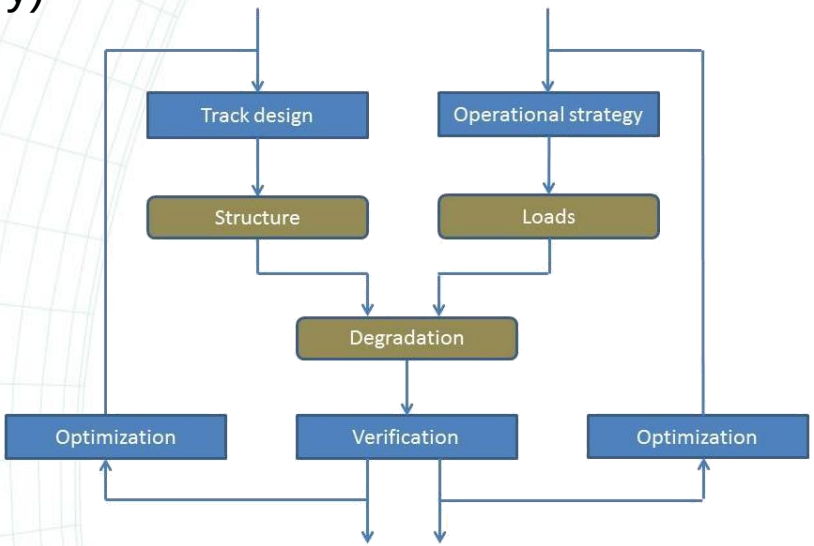

(Vollebregt & Acquati, 2014)

Observation 5:
Long-term efforts are needed – where there's a will there's a way.

Observation 5 – big efforts are needed

We must focus on the actual forces exerted on an actual track by an actual train or vehicle.

Include flexibility & detailed contact.

Validate models with measurements.

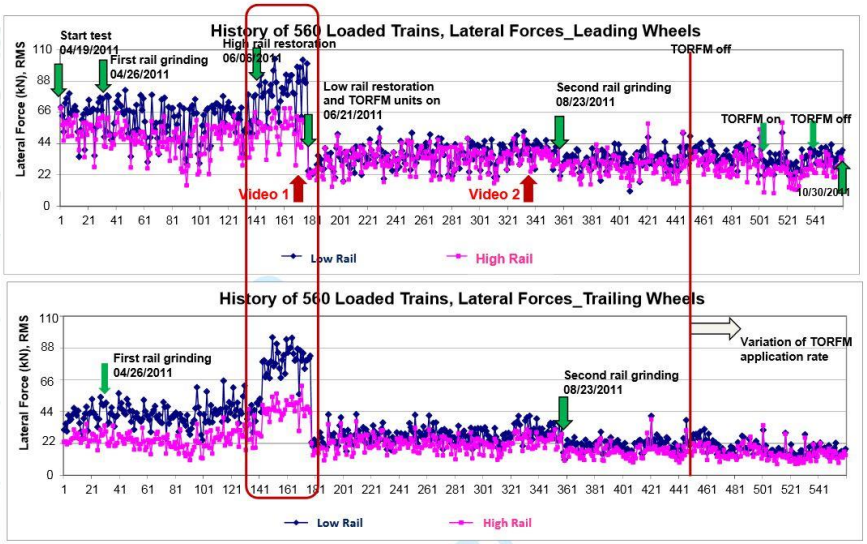

(Wu & Kerchof, 2014)

Observation 5:
Long-term efforts are needed – where there's a will there's a way.

A quick overview of w/r contact analysis

Vehicle dynamics doesn't care about

- Size & shape of contact area
- Stress distribution
- Maximum pressure, etc.

Must know

- Total forces, moments
- Location of the forces

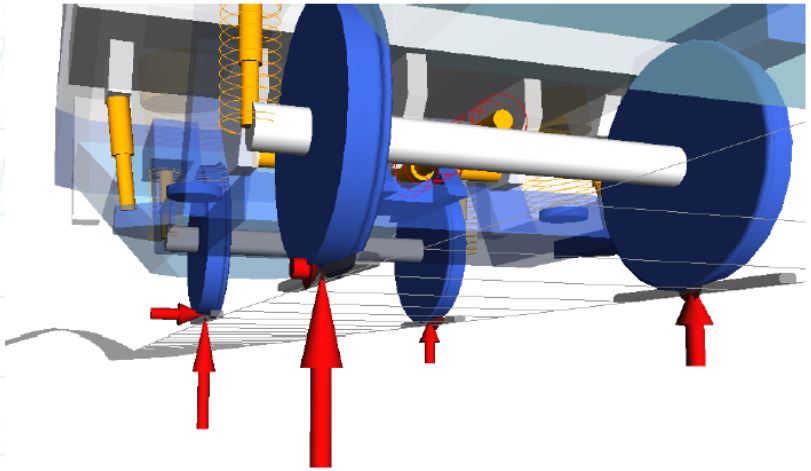

Schematizing the contact forces

The contact spring is strongly anisotropic:

Normal contact

- Responds to position, approach, interpenetration
- Sensitive to geometry

Tangential contact

- Responds to velocity, slip, creepage
- Sensitive to friction parameters

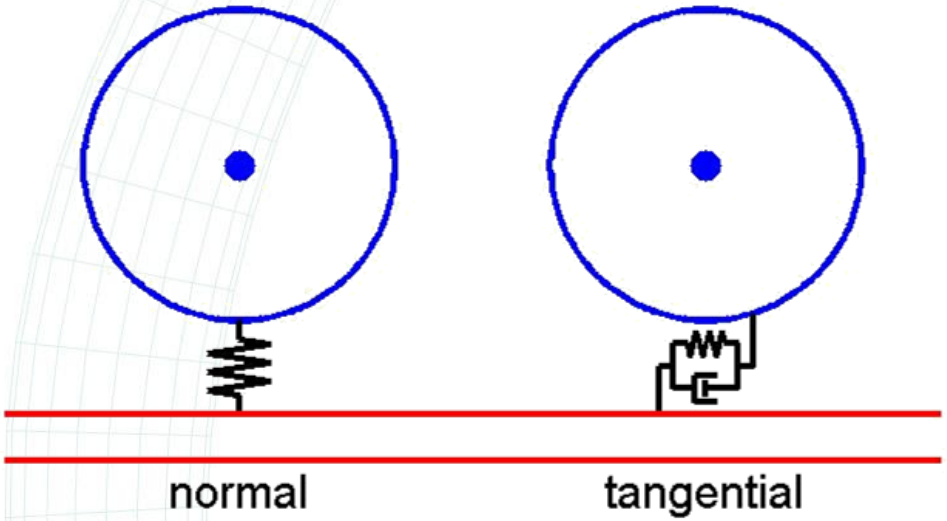

Dealing with anisotropy

1. Find the
   initial contact point
2. Determine the
   contact angle
3. Compute forces in
   local coordinates.

Deals with normal and tangential contact separately.

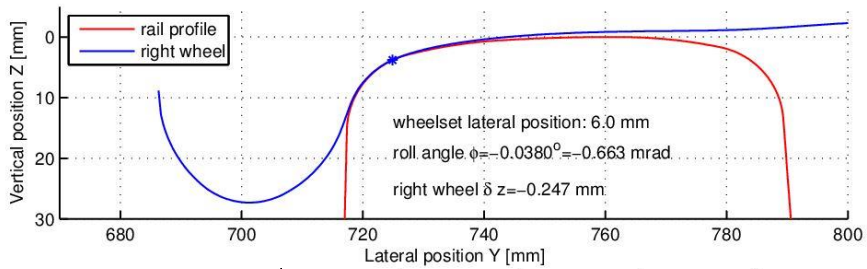

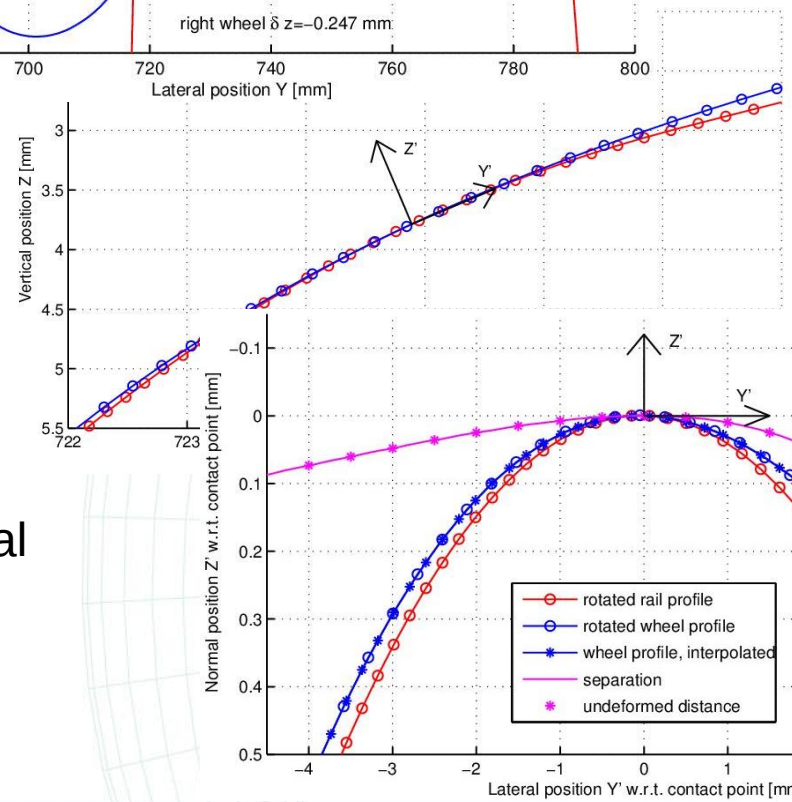

Normal contact algorithms

1. Hertz theory
2. Fast & simplified non-Hertzian
3. Linear elasticity theory, half-space
4. Linear elasticity theory, conformal

Effective “spring stiffness” may differ 20 – 100 %.

(Pressures may differ up to 300% – relevant for RCF and wear)

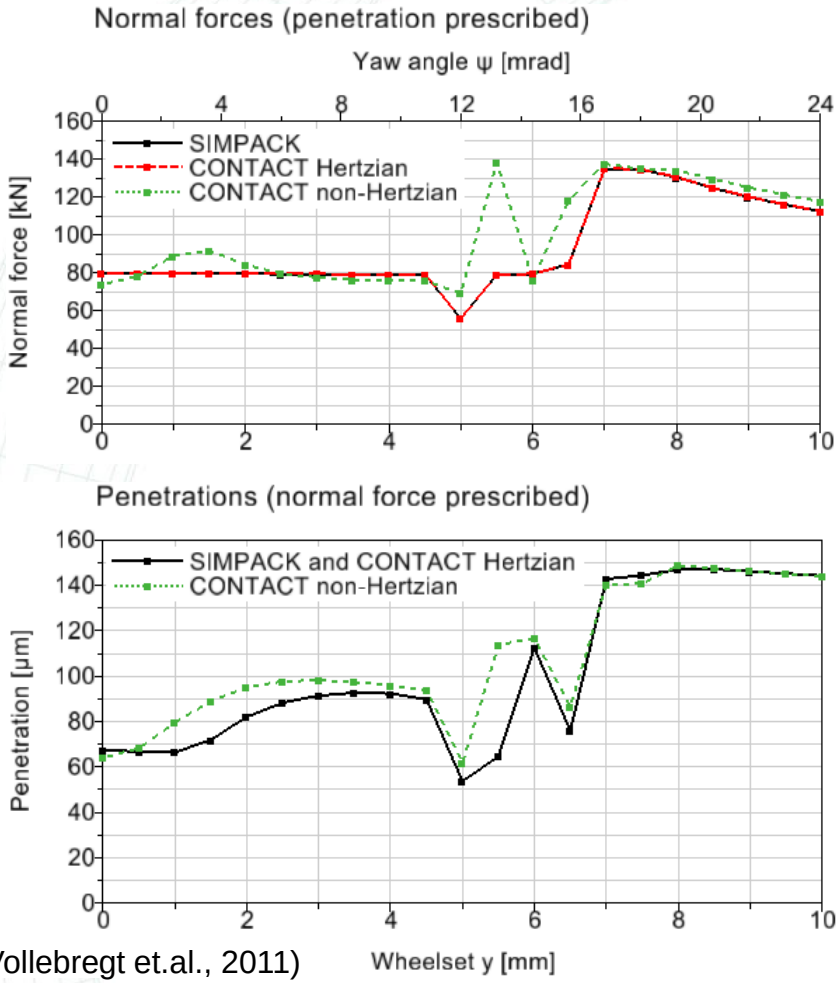

(Vollebregt et.al., 2011)

Tangential contact algorithms

1. Linear theory
2. Shen-Hedrick-Elkins
3. Polach's method
4. FASTSIM
5. Table-based approach
6. Linear elasticity theory, half-space
7. Linear elasticity theory, conformal
8. Finite elements

Affected a lot already by the normal contact algorithm!

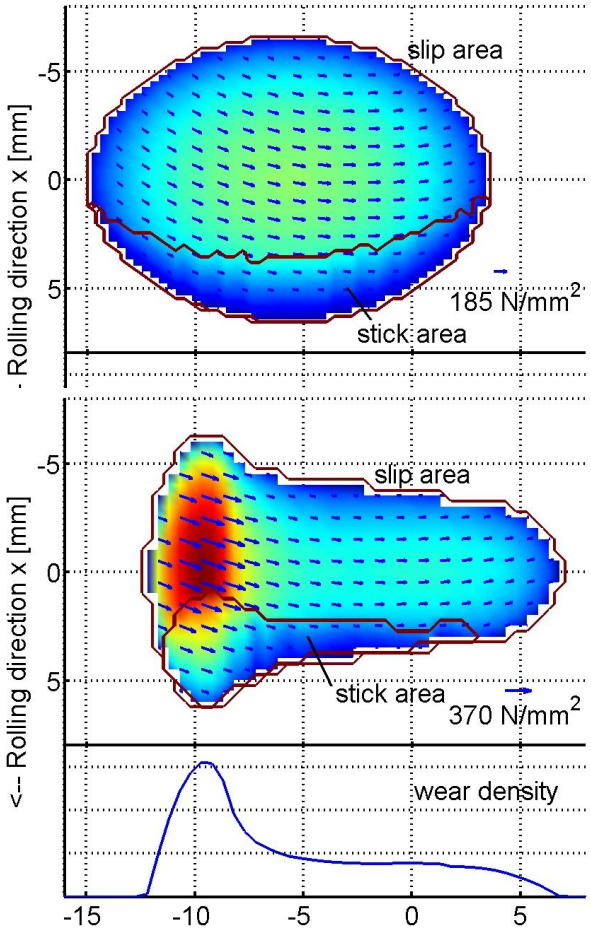

Tangential contact algorithms

Simplified theories

1. Linear theory
2. Shen-Hedrick-Elkins
3. Polach's method
4. FASTSIM
5. Table-based approach
6. Linear elasticity theory, half-space
7. Linear elasticity, conformal
8. Finite elements

Full theories

Affected a lot already
by the normal contact algorithm!

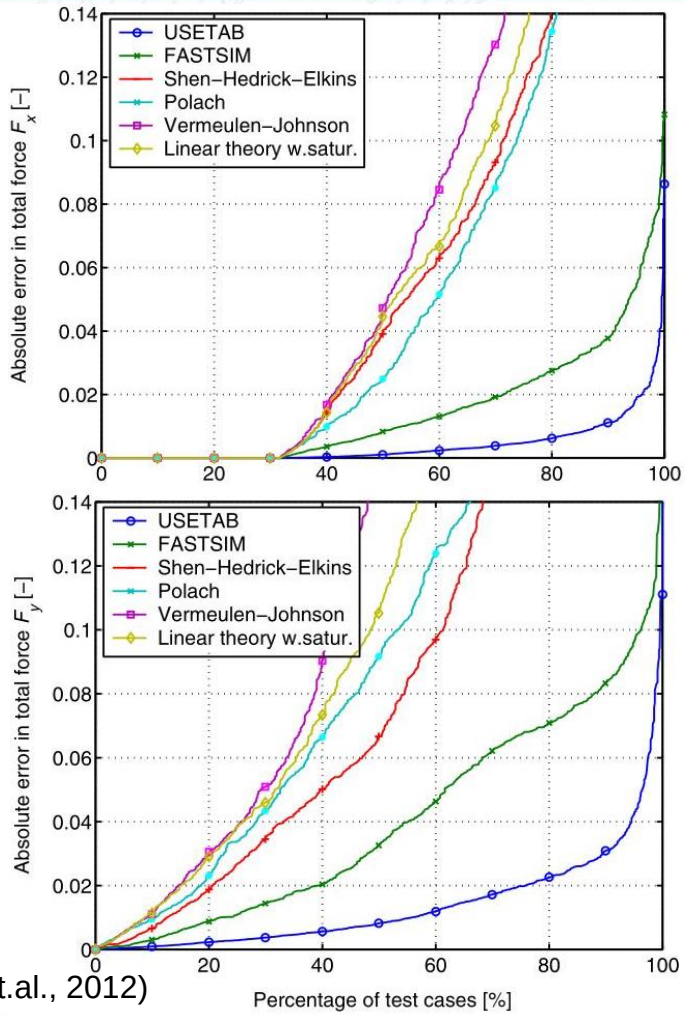

(Vollebregt et.al., 2012)

Beyond Coulomb friction

1. Linear theory
2. Shen-Hedrick-Elkins
3. Polach's method
4. FASTSIM
5. Table-based approach
6. Linear elasticity theory, half-space
7. Linear elasticity, conformal
8. Finite elements

Fastsim: Spiryagin, Polach and Cole, 2013; Meierhofer et.al., 2014
Table-based: Klauser and Vollebregt, 2015
CONTACT: V. & Schuttelaars, 2011, V. 2014
Finite elements: Zhao and Li, 2012.

(Hou et.al., 1997)

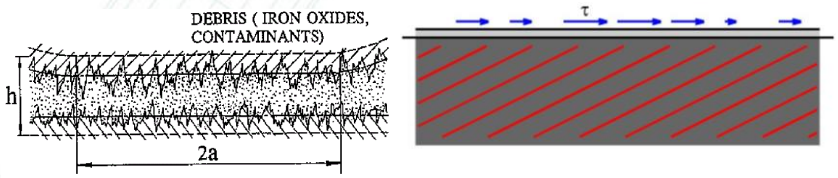

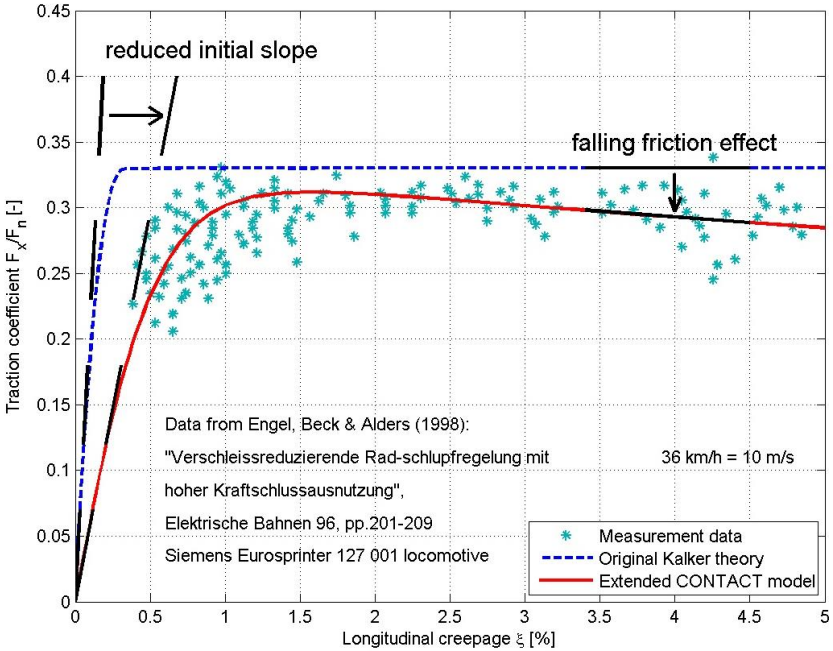

(Vollebregt, 2014)

Observation 5 – wheel-rail contact tribology

Detailed contact models are available

- Including 3rd body layer & fluids
- Including falling friction (temperature)

Needs further development & validation

- Roller rig data vs. model results
- Effects of friction modifiers

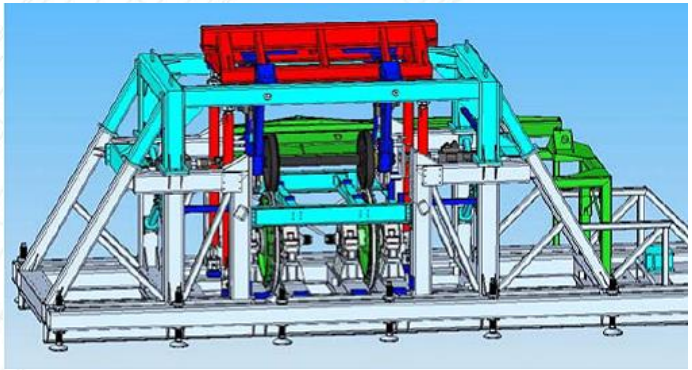

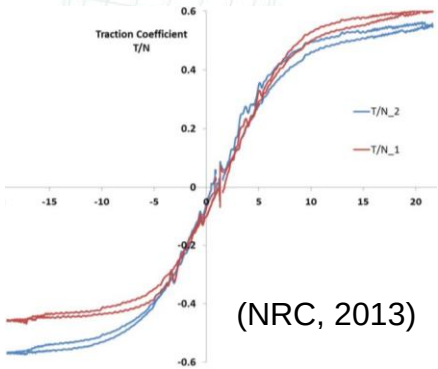

(NRC, 2013)

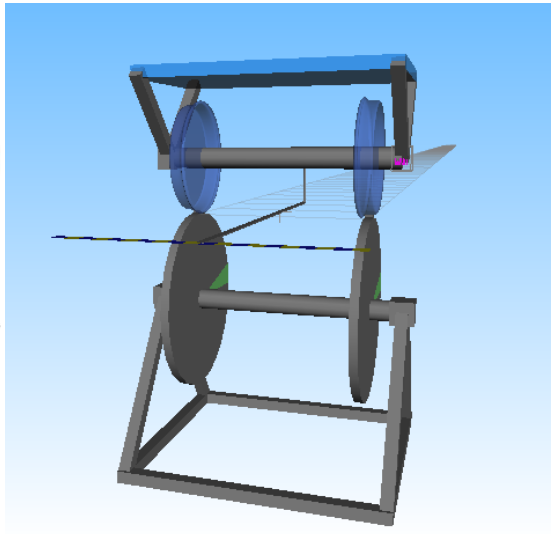

Observation 5:
Long-term efforts are needed – where there's a will there's a way.

Conformal contact analysis

1. Introducing generalized curvi-linear coordinates (x, s, n)
2. Normal problem uses local normal direction
3. Tangential problem uses local (x, s) directions

Total forces: add tractions vectorially, using (x, y, z) coordinates.

Much less sensitive to the reference contact point!

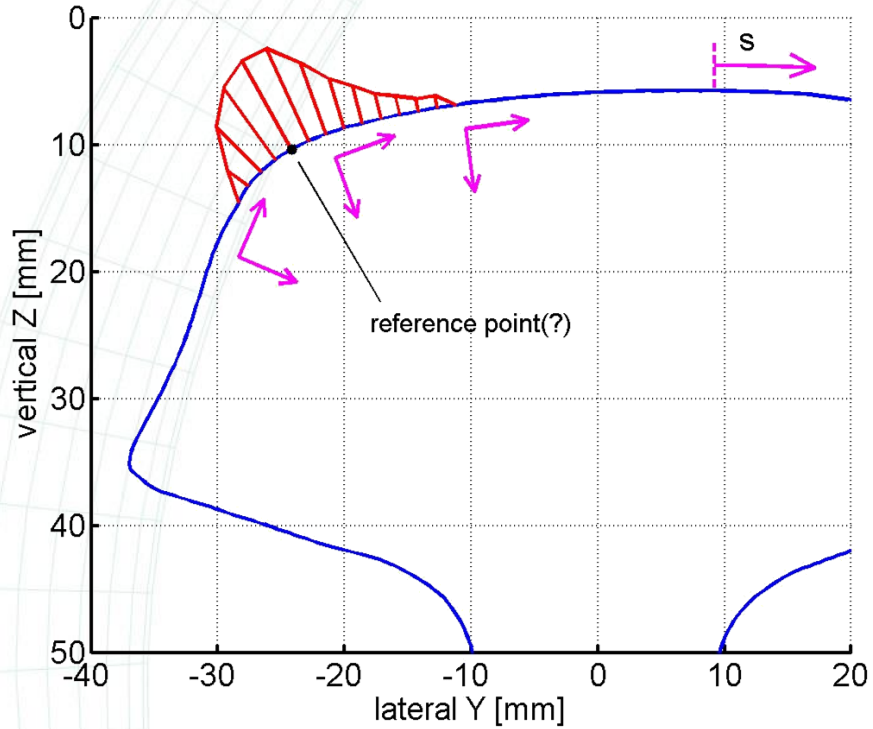

Influence coefficients for quasi quarter-space

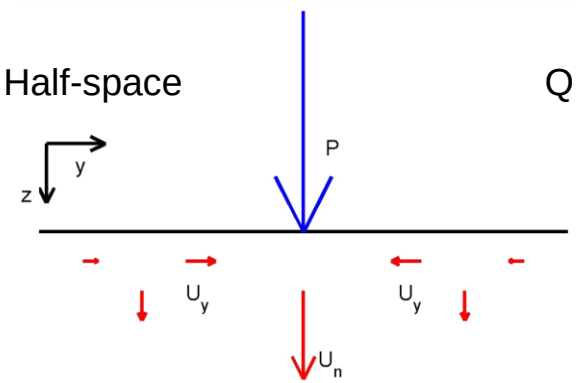

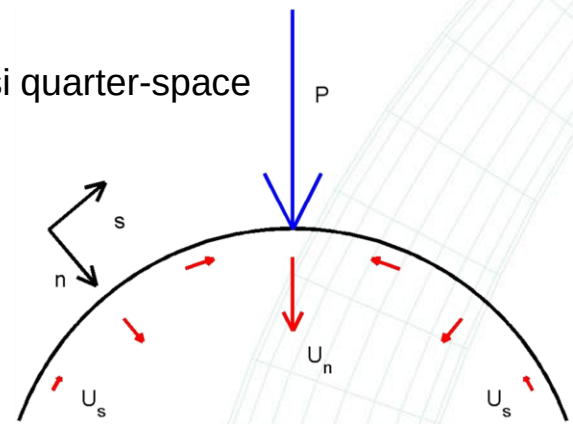

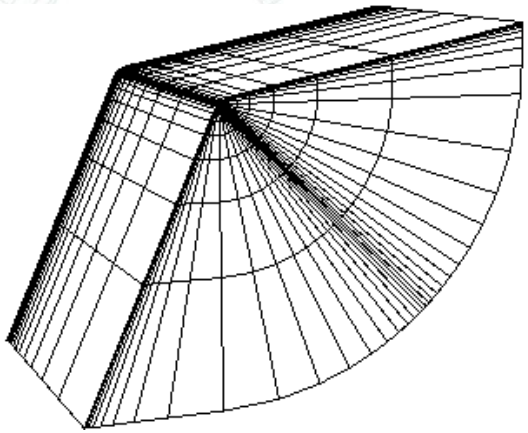

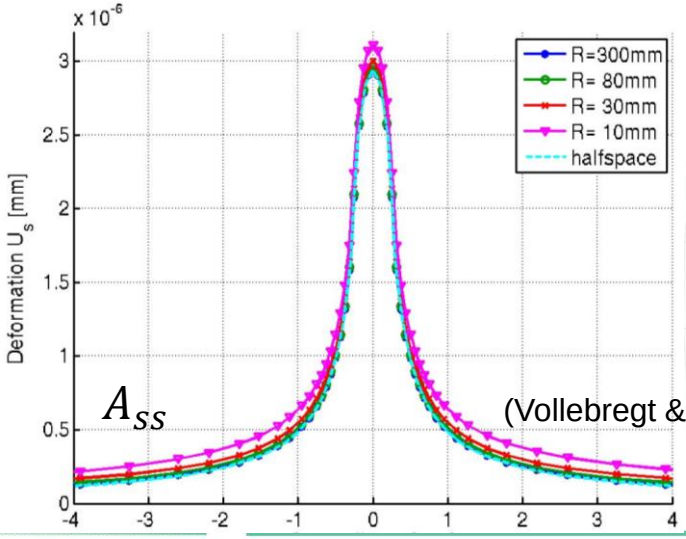

(Vollebregt & Segal, 2014)

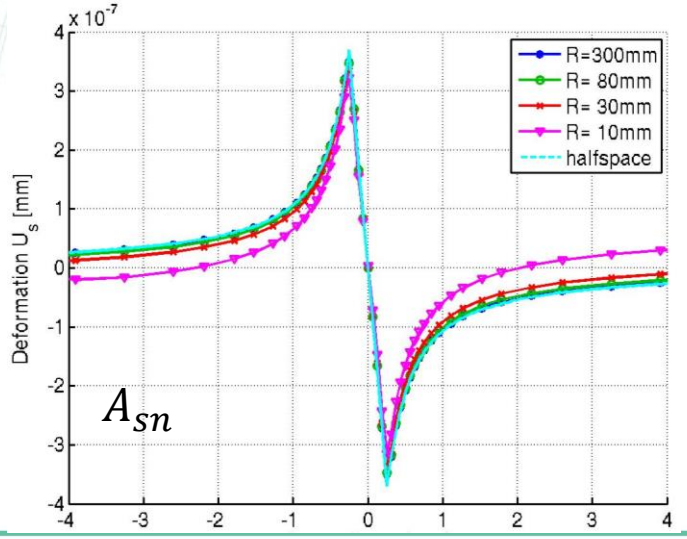

Observation 5 – wheel-rail contact geometry

Detailed contact models are available

- Including conformal geometry

Needs further development

- Validation of the detailed approach
- Validation of simplified approaches
- Integration in MBS software

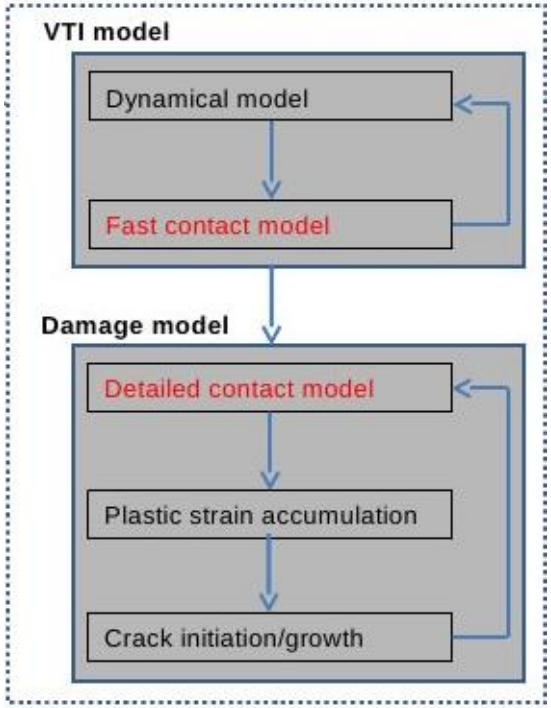

Observation 5:
Long-term efforts are needed –
where there's a will there's a way.

Conclusions

Simulation for railway engineering lags 10 – 15 years behind to other industries.

Bigger investments are required to improve simulation.

Using “integrated modelling”, using a whole systems approach.

- Complete model of vehicle + track
- Improve track flexibility
- Improve contact capabilities
- Simplify model building, running and inspecting results

References

- (Hou et.al., 1997) – Rheological model of solid layer in rolling contact, Wear 211, 134-140.
- (Kerchof, 2013) – presentation at WRI conference.
- (Klauser & Vollebregt, 2015) – IAVSD conference, Graz.
- (Meierhofer, Hardwick, Lewis, Six & Dietmaier, 2014) – Third body layer - experimental results and a model describing its influence on the traction coefficient, Wear 314, 148-154
- (NRC, 2013) – Magel, Caldwell, presentations for ICRI working group.
- (Spiryagin, Polach & Cole, 2013) – Creep force modelling for rail traction vehicles based on the Fastsim algorithm, VSD 51, 1765-1783.
- (Steenbergen & Vollebregt, 2015) – A methodology for forecasting RCF on irregular track, submitted.
- (Vollebregt, 2014) – Numerical modeling of measured railway creep versus creep-force curves with CONTACT, Wear 314, 87-95.
- (Vollebregt, 2015) – New insights in non-steady rolling contact, IAVSD conference, Graz.

References

- (Vollebregt & Acquati, 2014) – Towards a better understanding of track degradation, Railway Gazette International, Oct.2014, 52-54.
- (Vollebregt, Iwnicki, Shackleton & Xie, 2012) – Assessing the accuracy of simplified frictional rolling contact algorithms, VSD 50, 1-17.
- (Vollebregt & Schuttelaars, 2011), Quasi-static analysis of 2-dimensional rolling contact with slip-velocity dependent friction, JSV 331, 2141-2155.
- (Vollebregt & Segal, 2014) – Solving conformal wheel-rail rolling contact problems, VSD 51 suppl, 455-468.
- (Vollebregt, Weidemann & Kienberger, 2011) – IAVSD conference, Manchester.
- (Wu & Kerchof, 2014) – Management of wheel/rail interface to prevent rail rollover derailments, JRRT 228, 673-686.
- (Zhai, 2009) - Fundamentals of vehicle-track coupled dynamics, VSD 47, 1349-1376.
- (Zhao & Li, 2011) – The solution of frictional wheel-rail rolling contact with a 3D transient finite element model: validation and error analysis, Wear 271, 444-452.