A Simulation Model for Intermodal Freight Transportation in Louisiana

by

PI: Peter Kelle, Ph.D., Professor
Ourso Family Distinguished Professor of Business Analysis
Department of Information Systems and Decision Sciences
2213 BEC, Baton Rouge, LA 70803
qmkell@lsu.edu, (225) 578-2509

Co-PI: Mingzhou Jin, Ph.D., Associate Professor and Associate Department Head
Industrial and Systems Engineering
University of Tennessee at Knoxville
525D John D. Tickle Engineering Building, Knoxville, TN 37996
jin@utk.edu, (865) 974-9992

January 2015

ABSTRACT

With increased emphasis on intermodal transportation development, the issue of how to evaluate an intermodal freight transportation system and provide intermodal solutions has been receiving intensive attention. In order to improve freight flow efficiency and therefore support economic development in the State, it is necessary to have a systematic tool to study the freight flow over all three major surface modes and their connections and, in turn, to help DOTD identify the best way to increase freight transportation capacity and improve flow efficiency.

Because of the high complexity and high variability involved in transportation flows, it is technically difficult to use analytical models to evaluate and study freight networks. Therefore, simulation has been widely used to address transportation issues, especially for single modes and at the micro-level. However, there are very few simulation models that focus on the connections on multiple transportation modes and emphasize on the system-wide performance evaluation. One aggregate model for the network in the State of Mississippi was developed in 2004 without considering the dynamics at any nodes and the model has a very low resolution.

A system-level intermodal simulation model should include highways, railways, and waterways because all three modes, working together, play significant roles in Louisiana freight flows. The simulation model will not only include the links and nodes of all three modes but also incorporate the connections between different modes. In all existing traffic simulation models, the capacity and volume/speed relationships are only well defined for some infrastructure in a single mode, such as highway links, dams and ports, or rail links. There are no simulation models that incorporate the capacity at intermodal connections and the dwelling time vs. volume relationships at connections though most freight flow time is spent at the connection nodes between modes or within modes (e.g., classification yards or ports). The intermodal connection points are often bottlenecks for the capacity of the overall freight network. The freight transportation network is an integrated system with various impacts on the society. In addition to mobility, the intermodal simulation model should also incorporate other transportation performance measures such as reliability, safety and security, environmental impact, economic development, etc. The research team finished a project of "Development of Performance Measurement for Freight Transportation" to identify the performance metrics for intermodal freight transportation network. Those metrics will be included in the proposed simulation model to evaluate any intermodal network or assess the benefits of a network improvement initiative in a comprehensive way. For some metrics, such as reliability, simulation may be the only effective way to do evaluation because of the difficulty of data collection and direct calculation.

The objectives of this proposed project are to

1. Develop a comprehensive simulation model for an intermodal freight network that considers the dynamics at the connections between transportation modes, and
2. Conduct what-if analysis of the performance of the Louisiana freight network under different scenarios and evaluate the benefits of selected network improvement initiatives.

Upon this mid-term report, the research has finished the first two tasks of summarizing the literature for intermodal transportation simulation and developing the simulation framework. A preliminary simulation model has been developed, including all three major surface transportation modes of highway, railway, and waterway. Mobility, a major performance metric, has been calculated in the model. The research will conduct the following work after this mid-term review.

- Keep developing the simulation model to include intermodal connections and all performance metrics, including reliability, safety, and environmental stewardship,
- Validate the simulation with other data sources, including traffic counters at certain locations from LaDOTD, energy data, safety dataset, etc., and
- Analyze certain scenarios provided by LaDOTD to identify efficient and effective measures to improve the overall performance of the Louisiana freight network.

TABLE OF CONTENTS

ABSTRACT III
TABLE OF CONTENTS V
LIST OF TABLES VII
LIST OF FIGURES IX
INTRODUCTION 1
OBJECTIVE 3
METHODOLOGY 5
1. Summarization of existing intermodal freight transportation simulation 5
2. Development of the simulation framework and selection of the simulation platform 5
3. Development of the simulation model 5
4. Validation of the simulation model 5
5. Analysis of various scenarios on the simulation model 5
DISCUSSION OF RESULTS 6
1. Summarization of Existing Intermodal Freight Transportation Simulations 6
1.1 General introduction to simulation 6
1.2 Introduction to Transportation Simulation 7
1.3. Simulation for Intermodal Freight Transportation 9
2. Simulation Framework and Simulation Platform 11
2.1 Overall Framework 11
2.2 Highway Framework 12
2.3 Railway Framework 15
2.4 Waterway Framework 16
2.5 Intermodal Connection 16
2.6 Simulation Outputs 16
2.7 Simulation Platform Selection 18
3. Simulation Development and Validation Preparation 23
3.1 Highway Network Simulation 23
3.2 Railway Network Simulation 24
3.3 Waterway Network Simulation 28
3.4 Output 29
4. Plan of the Second Stage 30
CONCLUSIONS 31
REFERECE 32

LIST OF TABLES

Table 2.1 Volume-Capacity Ratio and Congested speed..... 15
Table 2.2 Research Articles/Websites with Key Word Search..... 19

LIST OF FIGURES

Figure 1.1 Graphic Presentation of Simulation Results in Late 60's (Sagen, 1967) 7
Figure 2.1 17 Highway Outlets and 13 Railroad Outlets for Louisiana State 12
Figure 2.2 Truck enclosed van semi-trailer (Kay, 2009) 12
Figure 2.3 Updated BPR Curve 14
Figure 2.4 Rail Boxcar (Kay, 2009) 15
Figure 2.5 Layout of a Typical Classification Yard 16
Figure 3.1 Part of Arena Model for Highway Network 23
Figure 3.2 Sub-model "Rapides Parish to Alexandria LA or to Natchitoches LA or to the end" 24
Figure 3.3 Part of Arena model for Railroad Network 25
Figure 3.4 Details of a Classification Rail Yard Sub-Model 26
Figure 3.5 Details of Sub-model "Baton RougeR LA to New OrleansR LA" 26
Figure 3.6 Part of the Arena Model for Waterway Network 28
Figure 3.7 Details of Sub-model "CracraftP AR toVicksburgP LA or to the end" 29
Figure 3.8 Simulation Screen Shot 30

INTRODUCTION

With increased emphasis on intermodal transportation development, the issue of how to evaluate an intermodal transportation system and provide intermodal solutions has been receiving intensive attention since the enactments of the Intermodal Transportation Efficiency Act (ISTEA) and the Transportation Equity Act for the 21st Century (TEA-21). The new Moving Ahead for Progress in the 21st Century Act (MAP-21) asks all state DOTs to evaluate and improve the operation and maintenance of their freight networks. Louisiana plays an important role in U.S. freight transportation with a strong intermodal transportation network because of the Mississippi River and the Port of New Orleans. The freight traffic in the State is expected to significantly increase with economic development, especially after the Panama Canal expansion and with the increased trade with Latin America. In order to improve freight flow efficiency and therefore support economic development in the State, it is necessary to have a systematic tool to study the freight flow over all three major surface modes and their connections and, in turn, to help DOTD identify the best way to increase freight transportation capacity and improve flow efficiency.

Because of the high complexity and high variability involved in transportation flows, it is technically difficult to use analytical models to evaluate and study freight networks. Therefore, simulation has been widely used to address transportation issues, especially for single modes and at the micro-level. For example, the microscopic simulation software CORSIM is often used by state DOTs to study a small area of highways and ***arterial*** streets, typically for planning purposes. Major railroads have developed their own simulation models to study the operations in their classification yards. Most major ports have used simulation models to improve their operations and security. However, there are very few simulation models that focus on the connections on multiple transportation modes and emphasize on the system-wide performance evaluation. One aggregate model for the network in the State of Mississippi was developed in 2004 without considering the dynamics at any nodes and the model has a very low resolution.

A system-level intermodal simulation model should include highways, railways, and waterways because all three modes, working together, play significant roles in Louisiana freight flows. The simulation model will not only include the links and nodes of all three modes but also incorporate the connections between different modes. In all existing traffic simulation models, the capacity and volume/speed relationships are only well defined for some infrastructure in a single mode, such as highway links, dams and ports, or rail links. There are no simulation models that incorporate the capacity at intermodal connections and the dwelling time vs. volume relationships at connections though most freight flow time is spent at the connection nodes between modes or within modes (e.g., classification yards or ports). The intermodal connection points are often bottlenecks for the capacity of the overall freight network. The freight transportation network is an integrated system with various impacts on the society. In addition to mobility, the intermodal simulation model should also incorporate other transportation performance measures such as reliability, safety and security, environmental impact, economic development, etc. The research team finished a project of "Development of Performance Measurement for Freight Transportation" to identify the performance metrics for intermodal freight transportation network. Those metrics will be included in the proposed simulation model to evaluate any intermodal network or assess the

benefits of a network improvement initiative in a comprehensive way. For some metrics, such as reliability, simulation may be the only effective way to do evaluation because of the difficulty of data collection and direct calculation.

OBJECTIVE

The objectives of this project are to

1. Develop a comprehensive simulation model for an intermodal freight network that considers the dynamics at the connections between transportation modes, and
2. Conduct what-if analysis of the performance of the Louisiana freight network under different scenarios and evaluate the benefits of selected network improvement initiatives.

METHODOLOGY

Five tasks are proposed with detailed methodology descriptions to achieve the project objectives.

1. Summarization of existing intermodal freight transportation simulation

A literature review will be conducted to summarize the existing freight transportation simulation models for a single transportation infrastructure, a single-mode network, or an intermodal network. The review will specifically focus on data availability, models representing each major intermodal freight infrastructure, and simulation platforms.

2. Development of the simulation framework and selection of the simulation platform

A framework for an intermodal freight network simulation will be developed including all major network components, the connections of the components, the embedded relationships in each component, the variability that will be included in the model, input data, output data (including performance metrics), etc. The simulation model will incorporate the freight demand data from *Freight Analysis Framework Version* 3 and the *Intermodal Surface Network* data that the research team has collected from ORNL through collaboration in previous projects. Other data sources will be identified in this task, especially state-level data from LaDOTD. A simulation package will be selected by considering its modeling capability, speed, and animation quality.

3. Development of the simulation model

Following the framework defined in Task 2, this task will program a simulation model for the intermodal freight network in the State of Louisiana. The simulation model will incorporate the ways to calculate system-level performance metrics for intermodal freight networks. The model is expected to have the capability of allowing users to change settings, input data, and define scenarios.

4. Validation of the simulation model

The simulation model will be validated based on historical traffic data in the State of Louisiana. LaDOTD is expected to provide feedbacks to validate the simulation model. Changes, if necessary, will be made to the simulation model based on the suggestions from LaDOTD.

5. Analysis of various scenarios on the simulation model

A selected number of scenarios, such as different traffic demand patterns and various freight improvement projects, will be identified based on suggestions from LaDOTD and run on the simulation model. The developed simulation model and findings of what-if analysis will be widely disseminated in the academic community and to practitioners.

DISCUSSION OF RESULTS

1. Summarization of Existing Intermodal Freight Transportation Simulations

1.1 General introduction to simulation

Simulation is the imitation of a dynamic system using a computer program and can be used to demonstrate, evaluate, and improve system performance (Harrell et al., 2004). Simulation started its commercial applications in the 1960s and is currently a popular decision-making tool for various purposes, especially for complex systems that cannot be represented by analytical models. In addition to providing decision support, simulation provides visual animation that stimulates interest among audience and improves communication for complex system dynamics (Banks et al., 2004).

A computer simulation is an attempt to model a real-life or hypothetical situation on a computer to study how the system works (Bank et al., 2004). Computer simulation is often used as a substitute for a system for which simple closed form analytic solutions are not possible. Although there are many types of simulation, they all generate samples of representative scenarios for a model in which a complete enumeration of all possible states would be prohibitive or impossible. Computer simulation has become a useful part of modeling many natural and human systems to obtain insights in the development and operations of those systems and further to provide managerial insights for decision making. The data input plays an essential role in initial setting for a model and external data requirements vary widely across applications. Simulation is an important tool in design and optimization of engineering systems that involve many processes and entities that are highly interrelated.

Computer simulation models can be classified following various ways, including:

1) Stochastic or deterministic,
2) Continuous or discrete, and
3) Local or distributed.

Stochastic simulation models create random numbers with computer algorithms and convert them to random variables following pre-assumed distributions to represent the stochastic features of real-world systems. A discrete event simulation manages events at discrete time moments. Most computer, logic-test and fault-tree simulations are of this type. In this type of simulation, the simulator maintains a queue of events sorted by the simulated time they should occur. The simulator reads the queue and triggers new events as each event is processed. All states of the system keep the same time between two consecutive events. In other words, state changes and decision makings only happen at those discrete moments. Rather than executing simulation in real time, it is often more important to be able to access the data produced by a simulation model and to discover defects in the sequence of events. A special type of discrete simulation that does not rely on a model with any underlying equations, but can nonetheless be represented formally, is agent-based simulation. In agent-based simulation, individual entities (such as molecules, cells, consumers, pedestrians, and drivers) are represented directly (rather than by their density or concentration) and possess an internal state and set of behaviors or rules that determine how the

agent's state is updated from one time-stamp to the next. A continuous dynamic simulation performs numerical solution of differential-algebraic equations or differential equations (either partial or ordinary). Periodically, the simulation program solves all the equations and uses the numbers to change the state and output of the simulation.

Distributed models run on a network of interconnected computers, possibly through the Internet, with information exchanged among those computers with a simulation run . Simulations dispersed across multiple host computers like this are often referred to as "distributed simulations". There are several standards for distributed simulation, including Aggregate Level Simulation Protocol (ALSP), Distributed Interactive Simulation (DIS), the High Level Architecture (simulation) (HLA) and the Test and Training Enabling Architecture (TENA).

1.2 Introduction to Transportation Simulation

Simulation has been widely used to evaluate and analyze transportation systems because they are often complicated and involve high variability. A transportation system may involve thousands or millions of interacted entities so that analytical models become impossible. Furthermore, traffic behaviors are difficult to be modeled by simple analytic models. The simulation of transportation systems is the mathematical modeling of transportation systems (e.g., freeway junctions, arterial routes, roundabouts, downtown grid systems, etc.) through the application of computer software to help plan, design and operate transportation systems. Simulation of transportation systems started over forty years ago and is an important area of discipline in Traffic Engineering and Transportation Planning today. Various transportation agencies, academic institutions and consulting firms use simulation to aid in their management of transportation networks.

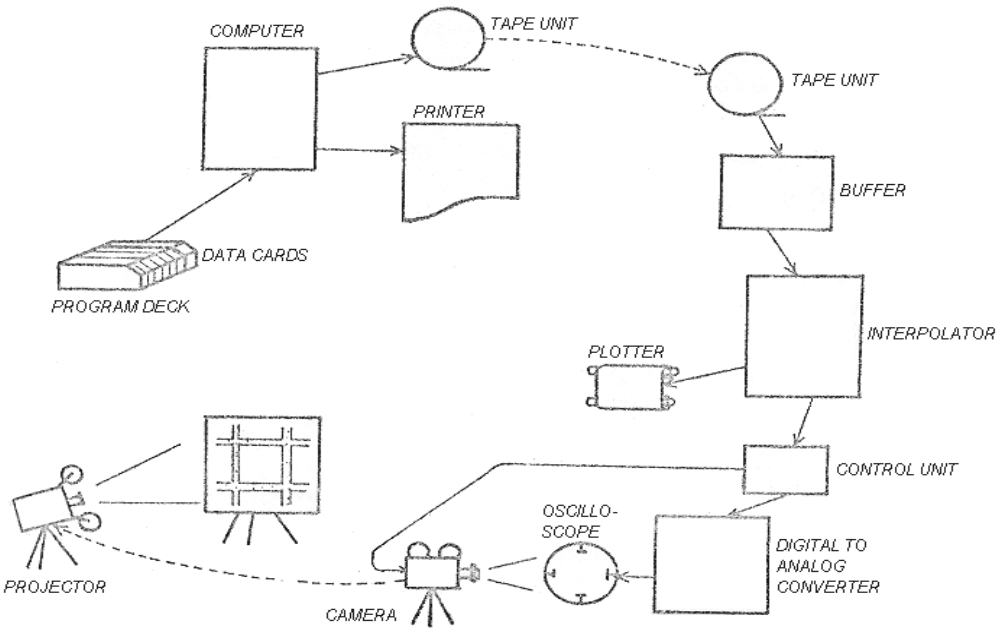

Figure 1.1 Graphic Presentation of Simulation Results in Late 60's (Sagen, 1967)

Transportation researchers have developed numerous models and simulators for use in the planning, design, and operations of such systems. The use of computer simulation started when Gerlough (1955) published his dissertation: "Simulation of freeway traffic on a general-purpose discrete variable computer" at the University of California, Los Angeles. From then, computer simulation has become a widely used tool in transportation engineering with a variety of applications from scientific research to planning, training and demonstration. The five driving forces behind this development are the advances in traffic theory, in computer hardware technology and in programming tools, the development of the general information infrastructure, and the society's demand for more detailed analysis of the consequences of traffic measures and plans (Pursula, 1999). An example demonstrating the great advances in hardware and software technology is presented in Figure 1.1.

The applications of traffic simulation programs can be classified in several ways. Based on the scope and resolution, traffic simulation could be classified into microscopic, mesoscopic and macroscopic. Based on the time steps, traffic simulation can be grouped into continuous and discrete time approach. Regarding the problem areas, we can categorize traffic simulation for intersection, road section, terminal, and network simulations. Other special application areas are traffic safety and the effects of advanced traffic information and control systems. Microscopic simulation is based on the description of the movement of each individual vehicle in the traffic flow by considering its relevant aspect and behaviors such as acceleration, deceleration, turning, and switching lane (Barceló, 2010). Microscopic simulation could also be used to estimate traffic demand (Pursula, 1999). Macroscopic simulation is based on the flow theory of continuous flow, whose goal is describing the evolution in space and time of variables that are characteristic of macroscopic features of traffic flows, such as volume, speed and density (Barceló, 2010). In other words, the microscopic simulation uses individual vehicles as its entity whereas macroscopic simulation considers the mass of vehicles as an entity. Other than the previous two methodologies, mesoscopic simulation is the simplification that intends to capture the essential points of the dynamic, while requiring less data and hence is more computationally efficient than microscopic models (Barceló, 2010). Mesoscopic simulation models try to have some aspects of microscopic simulation with others from macroscopic models in order to represent the dynamic behaviors for a larger network. In this research, the studied network is at the state level so that modeling each vehicle is not computationally possible. The research team will develop a macroscopic simulation to capture overall traffic dynamics in the State of Louisiana.

Simulation can be applied both to transportation planning and to transportation design and operations. In transportation planning the simulation models may be used to evaluate the impacts of regional urban development patterns on the performance of the transportation system. Regional planning organizations may use these models to evaluate what-if scenarios in order to select transportation projects. On the other hand, modeling of transportation system operations and design focus on a smaller scale, such as a highway corridor. Lane types, signal timing and other traffic related questions are investigated to improve local system effectiveness and efficiency. While certain simulation models are specialized to model either operations or system planning, a few models have the capability to model both to some degree, which will be introduced in section 2.7. Whether it is for planning or for systems operations, simulation has been used for all kinds of transportation modes.

1) Roadway Transportation

Roadway transportation for both passenger and goods movements is perhaps the area where simulation is most used. Simulation can be carried out at a corridor level or at a more complex roadway grid network level to analyze traffic planning, design and operations such as delay, pollution, and congestion. Roadway transportation models can include all traveling entities on roadways, including passenger vehicles, trucks, buses, bicycles and pedestrians. In traditional roadway macroscopic traffic models, aggregate representation of traffic is typically used where all vehicles of a particular group obey the same rules of behavior. In micro-simulation, driver behavior and network performance are included so that detailed traffic problems can be examined (Duitt, 1998). However, microscopic simulation cannot be used to investigate a larger area, such as a state, because of its computational burden.

2) Railroad Transportation

Railroad is an important mode of travel for both freight and passengers because of its large carrying capacity and good fuel efficiency. Simulation has been used to evaluate railroad performance and facilitate decision making at various levels, such as a network for one specific Class-I railroad (e.g., Lewellen and Tumay, 1998; Dalal and Jensen, 2001), classification yards (e.g., Lin and Cheng, 2009), or tracks (e.g, Nash and Huerlimann, 2004). Goodman et al. (1998) provided a review of simulation models for railway systems in early days.

3) Waterway and Airway Transportation

Waterway and airway transportation presents two areas that are important for certain types of freight. Waterway plays a key role in global freight flow and is the major mode for transporting goods across continents. Inland waterway transportation, which is the most cost-effective and fuel-efficient transportation mode, is appropriate for commodity with low value and low lead time requirement. However, the access to inland waterway is often geographically restricted. Waterway simulation primarily includes container terminal modeling that deals with the logistics of container handling to improve system efficiency (Sgouridis et al., 2003) and may help to manage barge management in an inland waterway network (Bush et al. 2003). Airway transportation is mainly for special goods with small volume but high value and very high requirement on transportation lead time. This project will not include airways because of its small volume for freight movement from the viewpoint of a state DOT.

1.3. Simulation for Intermodal Freight Transportation

In addition to simulating a single mode, it is often more important to simulate an intermodal network, since modern supply chains often transport goods through multiple transportation modes from their origins to their destinations. In a freight network, various modes are closely integrated and represent high complexity that studying modes individually can overlook. Intermodal network simulation can help a better understanding on the impact of a certain network from a comprehensive perspective to more accurately represent its impact in order to realize important policy implications. In the literature, several simulation models have been developed for overall intermodal transportation in one region (e.g., a state) or nation from the planning viewpoint. For example, Tan et al. (2004) developed a simulation, called virtual network, for the intermodal network for the State of Mississippi; and Wittmann et al. (2007) developed a similar simulation

model for the metropolitan area of Hamburg, Germany. Certain simulation models are at the micro-level for intermodal terminals (e.g., Kondratowicz, 1990; Gambardella et al., 1998; Parola and Sciomachen, 2005) There are also a few advanced simulation models (e.g., Mahmassani et al., 2005) addressing design and operational problems involving intermodal transportation from the viewpoint of carriers and/or shippers rather than from the viewpoint of intermodal network planning and operations. In many papers for intermodal transportation simulation, the biggest concern is the lack of available data on the analyzed situations, what decreases the effectiveness of the simulation and proposed models validation. Authors often mention as next steps the gathering of empirical data in order to perform a more extensive validation of their models. This research is similar to the one done by Tan et al. (2004) but will take advantage of the newly available traffic demand data and traffic network data along with a different choice of simulation package.

2. Simulation Framework and Simulation Platform

2.1 Overall Framework

Transportation simulation models are based on two types of data, traffic demand data and network data. Freight Analysis Framework Version 3 (FAF^3) combines data from a variety of sources to create a comprehensive picture of freight movement by all modes of transportation and provides estimates for tonnage and value, by commodity type, mode, origin, and destination for 2007, 2009, and forecasts through 2040 (FHWA, 2012). The traffic demand data in this project is obtained from FAF^3's 2007 tonnage data by three modes (truck, rail and water), origin or destination Louisiana. The network data is available from the ORNL Intermodal Surface Network.

The basic nodes for Louisiana transportation network consists of 64 parishes of Louisiana (LA), 17 highway outlets (major Louisiana State border crossing points for highway) and 13 railroad outlets (major Louisiana State border crossing points for railroad), etc. In Figure 2.1, red circles and numbers denote highway outlets, and green squares and letters denote railroad outlets. Take two highway shipments for example to illustrate the nodes and links in this model. Figure 2.1 presents the two paths in blue. The first shipment origins from Calcasieu Parish and its destination is No.1 Highway Outlet. Sulphur, LA is a must-through node for both shipments originated from (or ended in) Calcasieu Parish and along the Interstate 10 highway. Therefore there are 3 nodes and 2 links in this Origination-Destination (OD) pair:

OD1: Calcasieu Parish → Sulphur, LA→ No.1 Highway Outlet.

The second shipment originates from Rapides Parish and ends in No.1 Highway Outlet. For the same reason with first path, Alexandria, LA, Iowa, LA and Oakdale, LA are also basic and indispensable node. 6 nodes and 5 links are needed in OD2:

OD2: Rapides Parish → Alexandria, LA →Oakdale, LA→Iowa, LA→ Sulphur, LA→ No.1 Highway Outlet.

It shares the same link with a piece of segment from the first path: Sulphur, LA → No.1 Highway Outlet. These two paths make a significant part of highway network in the southwest Louisiana State.

The two examples will also appear again in next section 2.2 to explain the calculation of truckloads in a shipment and how to turn the raw data from previous project "Development of Performance Measurement for Freight Transportation" into data we can use here in this simulation model.

Figure 2.1 17 Highway Outlets and 13 Railroad Outlets for Louisiana State

2.2 Highway Framework

On highways, trucking is the only mode to deliver shipment via private carriers or for-hire carriers. In for-hire sector, full truckload (TL) is 80% of all trucking, including less-than-truckload (LTL) and package express (PX) (Matheson, 2003). Commercial trucks include 5-axle tractor semi-trailers and other double trailer combination and triple trailer combination with different weights and combinations (USDOT, 2004). As the most common truck trailer, the dimension, and cube and weight capacity of the 5-axle semi-trailer is shown in Figure 2.2. The max truckloads of a 53-foot semi-trailer truck are 25 tons.

In this simulation model, five 53-foot semi-trailers are pressed into a batch or a fleet, and each animated truck stands for a 125-tons shipment or a 5-truckloads shipments

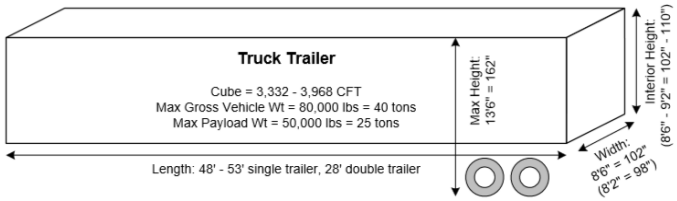

Figure 2.2 Truck enclosed van semi-trailer (Kay, 2009)

The previous project provides the traffic demand data between 64 parishes in Louisiana and 17 highway outlets. Continued from last section's example, the first path, each year 949.37 kiloton (KT) cargos need transportation from Calcasieu Parish to No.1 Hwy Outlet. On average, 104 truckloads are estimated as average daily volume.

$$\frac{traffic\ demand\ data \times KT\ to\ Ton}{\max truckloads\ for\ semitrailer \times days\ in\ a\ year} = \frac{949.37 \times 1000}{25 \times 365} = 104$$

Because we assume five truckloads for a batch, 21 animated highway entities travel daily from Calcasieu Parish to No.1 Highway Outlet in the simulation model.

Similarly, for the second path, 269.89 KT cargos need to be shipped annually from Rapides Parish to No.1 Hwy Outlet. 30 truckloads are required to be transported daily on average:

$$\frac{traffic\ demand\ data \times KT\ to\ Ton}{\max truckloads\ for\ semitrailer \times days\ in\ a\ year} = \frac{269.89 \times 1000}{25 \times 365} = 30$$

Considering 5 truckloads for a batch, we have 6 animated highway entities traveling daily from Rapides Parish to No.1 Highway Outlet in the simulation model. On average every 4 hours, an animated truck (a batch of 5 semi-trailer trucks) drives from Rapides Parish to No.1 Highway Outlet. The Exponential Distribution is assumed to generate random arrival process of the animated highway entities here: EXPO(4), 4 hours is the mean. This is a necessary parameter in the "Create" block in the simulation model with software Arena and it will be covered in detail in section 3.1.

Many parishes, such as Iberville Parish and Livingston Parish, need respectively 1 and 0 animated highway entity to transport their daily cargos to No.1 Highway Outlet. These kind of shipments (daily animated truck equals to or less than 5) have not been currently included in the simulation model so far but will be included in the next stage of this project.

In this interim simulation model, travel time for trucks is based on the max limited free-flow on the given roads or highways. To simulate the road congestion more accurately, the speed-flow relationship is required to be involved in the model in future. Numerous scholars in the transportation research field have presented various speed-flow functions to predict the congested speed as function of traffic flow in last several decades. The 1965 and 1985 Highway Capacity Manual (HCM) provides speed-flow functions with parabolic-shape curves derived from empirical study. The negatives of these functions are the over estimation on speeds for the volume-capacity ratio greater than 1 and under estimation on speeds for volume-capacity ratio less than 1 (Singh and Dowling, 2002). The speed-flow function from 1994 HCM, also parabolic in shape, fails to predict speeds for the volume-capacity ratio larger than 1 (Singh, 1999). The most commonly used Bureau of Public Roads (BPR) function based on 1965 HCM is as follows:

$$V = \frac{V_0}{\left[1 + a\left(\frac{v}{c}\right)^b\right]}$$

Here,

V: Congested speed,
V_0: Free − flow speed,
$\frac{v}{c}$: volume − capacity ratio, and
$a = 0.15$ and $b = 4$ are too coefficients for model calibration.

Skabardonis and Dowling (1997) recommended an updated BPR function with better validation result for the coefficients of $a = 0.05$ and $b = 10$. In this simulation project, the updated BPR function is used in the simulation. Assumed trucks on an Interstate highway in Louisiana State travel at the max limited speed 75 mph. As volume-capacity ratio goes from 0 to 2 in the updated BPR function, the congested speed is illustrated in Figure 2.3.

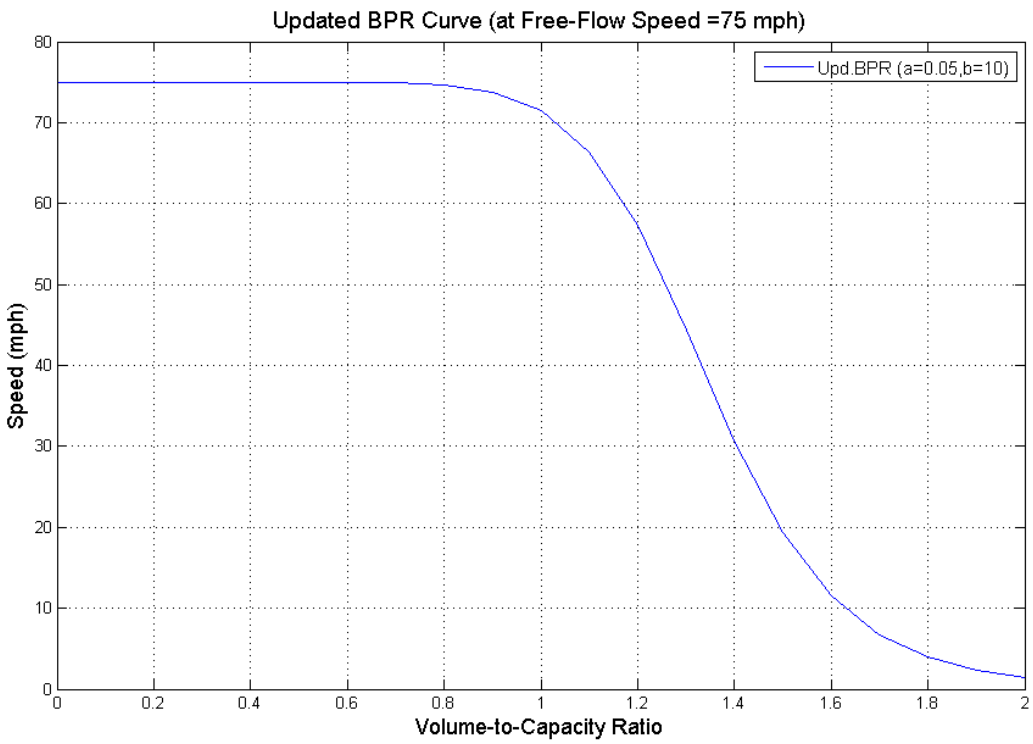

Figure 2.3 Updated BPR Curve

The following Table 2.1 also describes the relationship between the volume-capacity ratios and the corresponding congested speeds in Louisiana highways. The congested speed will keep the max limited free-flow speed as the volume-capacity ratio smaller than 0.7 and will go down gradually from 71 to 20 mph as the ratio down from 1.0 to 1.5. The speed will decrease dramatically as the ratio in excess of 1.5.

Table 2.1 Volume-Capacity Ratio and Congested speed

Volume-Capacity Ratio	Congested Speed
< 0.7	≈75
0.7	74.9
0.8	74.6
0.9	73.7
0.95	72.8
1	71.4
1.1	66.4
1.2	57.3
1.3	44.4
1.4	30.7
1.5	19.3
1.6	11.5
1.7	6.8
>1.7	<6

2.3 Railway Framework

In railway transportation, cargos could be transported by carload (CL) and less-than-carload (LCL). A typical boxcar for rail transportation is shown in Figure 2.4. In most situations, a railcar will be cubed out before it reaches its upper limit for weight. The max railcar loads here in this model will take 50 tons for easy calculation. In this project, we assume a train consists of max 100 railcars so each animated train entity stands for a max 5000-tons shipment.

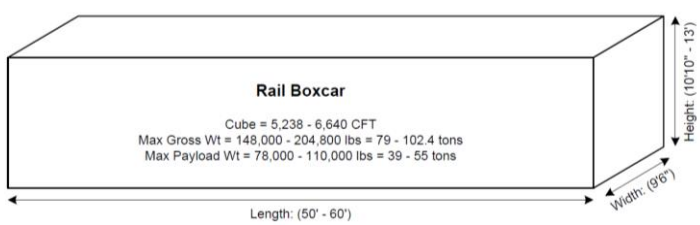

Figure 2.4 Rail Boxcar (Kay, 2009)

A typical classification rail yard incorporates three areas, receiving area, classification area and departure area. Railcars arrive in receiving area and get rearranged in the classification area. In classification area, they are sorted into different groups with different directions. Then the sorted railcars move to departure area waiting for their corresponding train to depart. As a result, railcars in one train don't always have the same destination. Figure 2.5 shows the layout of an example classification rail yard. R1-R4, C1-C6 and D1-D4 represent 4 tracks in receiving area, 6 tracks in classification area and 4 tracks in departure area. Each track in departure area connects the distinct railroad from this rail yard to the next one.

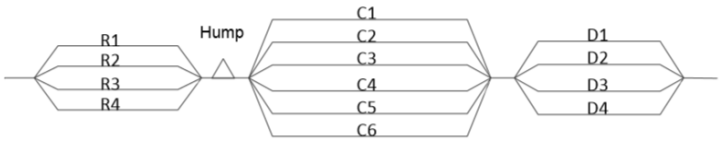

Figure 2.5 Layout of a Typical Classification Yard

For example in the D1 track, a block of 40 railcars has one directions to d1, another 33 railcars' destination is d2, and the last block of 24 railcars will ends in d3. All these 97 railcars share the same route from this rail yard to d1 and they form a Train1 on the track of D1. The block of 40 railcars gets unloaded in d1. If d1 is another classification yard, the remaining 57 railcars will wait for the departure train together with another same direction no-more-than-43 railcars block. If not classified, the Train1 will continue its driving through next rail yard. Only the network and traffic of Class-I railroads are considered in this simulation, The delay at rail yards in the United States is typically at 24 hours and the dwell time at each yard is reported by six Class-I railroads weekly at http://www.railroadpm.org/. On links, train speed takes a constant number, 20 miles per hour on average after considering siding for single line links.

2.4 Waterway Framework

Waterway transportation is a low-carbon transportation mode compared to highway and railroad methods, especially in certain commodity transport, such as chemical and agriculture products. The Mississippi River system has been a vital part of the US inland waterway network. On east state border of Louisiana, the Lower Mississippi River (LMR) provides a crucial and low-cost way to carry large amount of bulk commodities.

There are no locks between St Louis and New Orleans (Casavant, 2010). The LMR river condition allows for large tows with up to 40 barges (Campbell et al., 2007). In this simulation model, an animated boat stands for a large tow with 30 barges (6 barges long and 5 barges wide), with each barge capacity of 1,000 tons. We assume the barge speed takes a value of 10 mph after considering the rest time of tugboats based on a former waterway project (Ling et al., 2009).

2.5 Intermodal Connection

Intermodal connections have not been included in the simulation model at this stage. Main difficulty is hard to balance the perspective of micro-simulation and macro-simulation. To simulate the transportation condition of a whole state vividly, the macro-simulation is a must-have perspective. It is unable to simulate the detailed driving of each vehicle or to simulate the driving between two stations short in distance. For the intermodal connection, distance between the stations of three transport modes might be short and it's hard to get a good animation result. Another difficulty is the time limit. It might be easy to build an intermodal connection framework, but not easy to complete the framework in limited time, with lots of calculation for mobility, reliability, safety and environment stewardship, etc.

2.6 Simulation Outputs

The simulation model to develop is used to evaluate the freight network in the State of Louisiana and identify the measures to improve the overall performance following certain metrics. The performance metrics included in the simulation model includes Mobility, Reliability, Safety, and Environmental Stewardship. These metrics are the outputs of the simulation.

Mobility

Mobility is a measure of transportation system effectiveness and is defined as the average travel time (ton-hour) per ton mile required (TMR). TMR is obtained from geographic distance. The statistical model for Mobility (*M*) is:

$$M = \frac{\sum_{(i,j,n)\in R} p_{i,j,n} T_{i,j,n}}{\sum_{(i,j,n)\in R} p_{i,j,n} l_{i,j}}$$

R is a set of all trips in the network. An origin-destination pair (O-D pair) is described by (*i* ,*j*), where *i* is the index for origin, j for destination. (*i*,*j*,*n*) stands for one trip and *n* is the index of trips with same O-D pair (*i* ,*j*). $p_{i,j,n}$, the freight tonnage carried on the trip (*i*,*j*,*n*). $T_{i,j,n}$, the travel time for whole trip (*i*,*j*,*n*). $l_{i,j}$, the geographic distance from origin *i* to destination *j*.

Freight tonnage on (*i*,*j*,*n*) is available from traffic demand data and the geographic distance between O-D pair (*i* ,*j*) also accessible from network data. Hence, $p_{i,j,n}$ and $l_{i,j}$ is known before simulation. $T_{i,j,n}$, the entire travel time from origin *i* to destination *j*, is the single parameter we need to collect from simulation model. Time for each vehicle arriving system and leaving system is recorded and the difference is $T_{i,j,n}$. After calculation, the mobility for highway network, railroad network, waterway network and overall network is available. If intermodal connection is addressed in the simulation model in future, the mobility of intermodal network is also obtainable.

Reliability

Reliability is a measure of transportation system resilience and is defined as the coefficient of overall variation of travel time per travel mile required. The statistical model for reliability (*R*) is:

$$R = \frac{\sqrt{\dfrac{\sum_{(i,j,n)\in R} p_{i,j,n} l_{i,j} \left(\dfrac{T_{i,j,n}}{l_{i,j}} - M\right)^2}{\sum_{(i,j,n)\in R} p_{i,j,n} l_{i,j}}}}{M}$$

M is for mobility. Smaller R is desirable to reduce recurrent congestion and get a better estimate of travel time. Two types of delays are frequently addressed in transportation engineering study, recurrent delays and nonrecurring delays. Recurrent delay is regularly and predictable, while nonrecurring delay is unpredictable. *R* above accounts for the recurrent delays and $R_u$for the nonrecurring delays, expressed by:

$$R_u = \frac{\sqrt{\dfrac{\sum_{(i,j,n)\in R} p_{i,j,n} l_{i,j} \left(\dfrac{T_{i,j,n} - f_{i,j,n}}{l_{i,j}}\right)^2}{\sum_{(i,j,n)\in R} p_{i,j,n} l_{i,j}}}}{M}$$

$f_{i,j,n}$ is the expected travel time for trip (*i*,*j*,*n*), obtainable after calculation with all known

information.

Safety

Safety is assessed by Fatality Rate (S_F) and Injury Rate (S_I).

Fatality Rate (S_F) is the number of fatalities per TMR, defined by:

$$S_F = \frac{\sum_{(i,j,n)\in R} F_{i,j,n}}{\sum_{(i,j,n)\in R} p_{i,j,n} l_{i,j}}$$

$F_{i,j,n}$ is the fatality numbers for trip (i,j,n) and
$\sum_{(i,j,n)\in R} p_{i,j,n} l_{i,j}$ is the summation of TMR for each trip (i,j,n).

Injury Rate (S_I) is the injury numbers per TMR, expressed by:

$$S_I = \frac{\sum_{(i,j,n)\in R} I_{i,j,n}}{\sum_{(i,j,n)\in R} p_{i,j,n} l_{i,j}}$$

$I_{i,j,n}$ is the injury numbers for the trip (i,j,n).

Environment Stewardship

Environment stewardship is measured by Energy Consumption Rate (EC) and Pollutant Released Rate (P).

Energy Consumption Rate (EC) is the average unsustainable energy consumption (BTU) per TMR, defined by:

$$EC = \frac{\sum_{(i,j,n)\in R} E_{i,j,n}}{\sum_{(i,j,n)\in R} p_{i,j,n} l_{i,j}}$$

$E_{i,j,n}$ is the unsustainable energy consumption for trip (i,j,n).

Pollutant Released Rate (P) is tons of auto source emission from transportation system per TMR, defined by:

$$P = \frac{\sum_{(i,j,n)\in R} PO_{i,j,n}}{\sum_{(i,j,n)\in R} p_{i,j,n} l_{i,j}}$$

$PO_{i,j,n}$ is the tons of auto source emission from the trip (i,j,n).

2.7 Simulation Platform Selection

Simulation software is getting better in a variety of different ways. With new advancements in mathematics, engineering and computing, simulation software programs are increasingly becoming faster, more powerful, more detail oriented and more realistic. It is more common to experiment with traffic networks in a computer simulated environment because experimenting

with traffic in the real environment is not practical (Tan et al., 2004).

Transportation models generally can be classified into microscopic, mesoscopic, macroscopic, and macroscopic models. Microscopic models study individual elements of transportation systems, such as individual vehicle dynamics and individual traveler behavior. Mesoscopic models analyze transportation elements in small groups, within which elements are considered homogeneous. A typical example is vehicle platoon dynamics and household-level travel behavior. Macroscopic models deal with aggregated characteristics of transportation elements, such as aggregated traffic flow dynamics and zonal-level travel demand analysis. Among all of microscopic software packages in transportation models, CORSIM is very outstanding. It has been widely used in countless transportation projects, including many critical emergency evacuation studies. As well, it is the most trusted traffic simulation software among research communities in the U.S. It combines NETSIM (the surface street traffic simulation software) and FRESIM (the freeway simulation software), both of which had been developed since the 1970s with the support from FHWA.

As evidenced in the National Transportation Library (NTL) database and Google searches on March 2008 and December 2014. In Table 2.2, research articles with CORSIM keywords are about two and half times as many as articles with the second most used traffic simulation software, according to NTL. The .gov Google searches confirm that CORSIM are most likely to be used in research and US government-sponsored projects as well.

Table 2.2 Research Articles/Websites with Key Word Search

	NTL		WebPages Searched by Google .gov	
Key Words	Mar. 2008	Dec 2014	Mar. 2008	Dec. 2014
CORSIM	489	802[1]	1,480	4,660[2]
VISSIM	155	320	710	1,310
Paramics	137	148	387	775
AIMSUN	36	76	3	388
SimTraffic	31	68	469	758

The past records above demonstrate the pivotal roles that CORSIM has played in the nation's transportation research for microscopic traffic simulation. The number of papers shows the strong demand from the research community. However, although CORSIM plays pivotal roles in the nation's transportation research, it has a limitation that it is a microscopic simulation software package. But the statewide intermodal transportation network portion forms the macroscopic portion, while terminals and ports form the microscopic portion. Entity speed on the transportation network, for example, is calculated based on the macroscopic parameters of flow rate and capacity (Tan et al., 2004). Therefore, we need to find other software packages better for macroscopic intermodal simulation model.

1 By CORSIM or NETSIM or FRESIM keywords

2 By CORSIM only

The below is a list of some well-known simulation packages for macroscopic transportation models.

(1) Emme/2 is an urban transportation planning system, offering planners a comprehensive set of tools for traffic and transportation modeling. It provides decision-support capabilities, allowing the simultaneous description, analysis and comparison of several proposed scenarios, and providing methods for evaluating various transportation and land use development alternatives (Hardy et al., 2008)

(2) Aimsun is traffic modelling software that allows users to model anything from a single bus lane to an entire region. With thousands of licensed users in government agencies, consultancies and universities all over the world, Aimsun stands out for the exceptionally high speed of its simulations and for fusing travel demand modelling, static and dynamic traffic assignment with mesoscopic, microscopic and hybrid simulation – all within a single software application (Aimsun, 2014).

(3) TransModeler is a powerful and versatile traffic simulation package applicable to a wide array of traffic planning and modeling tasks. TransModeler can simulate all kinds of road networks, from freeways to downtown areas, and can analyze wide area multimodal networks in great detail and with high fidelity. Users can model and visualize the behavior of complex traffic systems in a 2-dimensional or 3-dimensional GIS environment to illustrate and evaluate traffic flow dynamics, traffic signal and ITS operations, and overall network performance (Caliper, 2014).

(4) ProModel is a flexible, general-purpose discrete-event simulation language and simulator that can be coded by users to develop specific functions and capabilities required in statewide freight transportation simulation models. It is capable of handling both macroscopic and microscopic elements that are required for the simulation (Tan et al., 20104).

(5) ProcessModel has four building blocks: activities, entities, resources, and stores. Within each block and for each routing option (connecting line) there is the capability of adding complex logic. Global variables and entity attributes can be easily defined within ProcessModel. ProcessModel also has a Label Block that can be used to display the current content of selected global variables during the simulation. ProcessModel provides the capability in a Label Block to display data from the global variables during the simulation (Kotusevski and Hawick, 2009)

(6) AnyLogic helps users to deal with various transportation issues, including the most challenging task - transportation management. Simulation modeling will allow you to maximize the transportation load, minimize your costs, and also calculate the probability of traffic costs overrun. You will be able to “play” various schemes of transportation and fleet management, which will allow you to reveal and prevent potential problems. In addition, anylogic java class can be integrated into a java program.The native Java environment provides multi-platform support. Both the AnyLogic IDE and models work on Windows, Mac and Linux. On the other hand, external routines can be integrated either by including external classes or using the JNT interface to non-java libraries (AnyLogic, 2014).

(7) Arena is a generic discrete-event simulation and automation software developed by Systems Modeling. It uses the SIMAN processor and simulation language. Also Arena can

be integrated with Microsoft technologies. It includes Visual Basic for Applications so models can be further automated if specific algorithms are needed. It also supports importing Microsoft Visio flowcharts, as well as reading from or outputting to Excel spreadsheets and Access databases. Hosting ActiveX controls is also supported. In Arena, users build an experiment model by placing modules (boxes of different shapes) that represent processes or logic. Connector lines are used to join these modules together and specify the flow of entities. While modules have specific actions relative to entities, flow, and timing, the precise representation of each module and entity relative to real-life objects is subject to the modeler. Statistical data, such as cycle time and WIP (work in process) levels, can be recorded and outputted as reports (Rockwell Automation, 2014)

Transportation planners often need to justify transportation related investments to public officials. Although the foregoing software packages have enough functions on transportation simulation, their operational cost is very big and it is relative complicated to use. On contrast, Arena has powerful visualization capabilities that complement data generated by analysis of freight transportation scenarios and relative lower simulation cost. Arena's drag and drop elements and structures allow you build simulations and visualize results with engaging 2D and 3D animation capabilities that do not require programming assistance. Furthermore, Arena has a proven track record of enabling companies to model and evaluate virtually every aspect of their transportation network. Arena's flowchart modeling methodology makes it easy to define and communicate the intricacies of complex transportation. Its built-in dynamic dashboards provide the model analysis you need to facilitate logistics optimization. Within Arena users can build customized displays of the model information to enable users to better understand what is happening in a transportation network. Arena is a commercial simulation software system with a wide variety of application in business, transportation, logistics, manufacturing, and healthcare system, etc. (Hammann and Markovitch, 1995). As the most widely used discrete event simulation software, Arena is designed to address the needs for both end users in enterprises and researchers in educational system. It's suitable for macro-simulation especially in constructing complicated network. Arena is powerful in complex system modeling and has built-in integration with other applications, Visual Basic, Microsoft Excel or Access, and AutoCAD, etc. (Bapat and Sturrock, 2003).

Freight Analysis Framework (FAF) is a comprehensive database initiated by the Federal Highway Administration Office of Freight Management and Operations in 1999 (Reebie Associates, 2002). It attempts to develop a complete database of transportation flows in the US traffic network. Major freight measures, including values, tons, and ton-miles, are easy to access through FAF by years, modes of transportation, types of commodity and zones. As the newest version of FAF, FAF^3 is based on the data from 2007 Economic Census (FHWA, 2012). FAF^3 incorporates FAF^3 Origin-Destination Data, FAF^3 Summary Statistics and FAF^3 Network Data. In this simulation, FAF^3 Origin-Destination Data is used for research, available at http://www.ops.fhwa.dot.gov/freight/freight_analysis/faf/faf3/netwkdbflow/. FAF^3 has 131 FAF traffic analysis zones including 123 domestic regions and 8 foreign regions, only 4 regions for Louisiana. To extract detailed traffic flow information from these 4-regions data, a disaggregation process is conducted in previous project. The traffic demand data for this simulation model benefits from the working result of that project. Very soon, FAF^4 will be released with more FAF zones and based on more recent Commodity Flow Survey conducted in

2012. The research team is able to incorporate new FAF data into the simulation model to be developed with relatively little additional effort.

3. Simulation Development and Validation Preparation

To simplify the simulation model at the current stage, all drivers from three transport modes have no rest time during travel and all vehicles runs 24 hours a day, 7 days a week. However, the research team plans to incorporate rush hours and non-rush hours in the model later.

3.1 Highway Network Simulation

Arena converts highway nodes, links and highway freight transportation system into logic models illustrated in Figure 3.1.

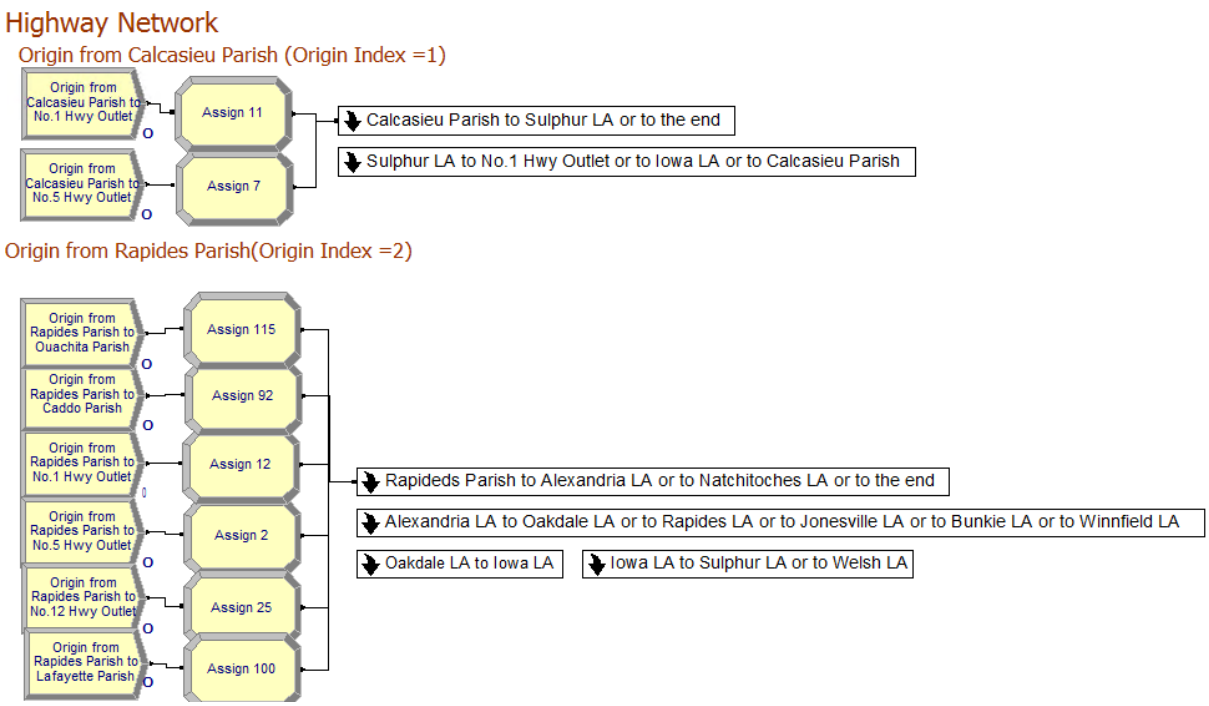

Figure 3.1 Part of Arena Model for Highway Network

The "Create" block in Pentagon shape "Origin from Rapides Parish to No.1 Hwy Outlet" generates arriving entities to the system. The amount or the frequency of the arriving entities is based on the exponential mean EXPO (4) mentioned in section 2.1.

The "Assign" block after each "Create" block specifies the attributes of the arriving entity when an entity comes to the system, i.e., cargos from the same origination could be transported to various destinations with different destination index. The "Assign" block (e.g, "Assign 12") sets up destination index equals to 1 (destination index = 1 means destination is No.1 Highway Outlet) and origin index equals to 2 (origin index = 2 means origin is Rapides Parish).

The rectangular shape Sub-model (with a turn-down arrow at front) "Rapides Parish to Alexandria LA or to Natchitoches or to the end" here tells Arena which path the cargos will be transported through. For example, "Rapides Parish to Alexandria LA or to Natchitoches LA"

means that cargo originated from Rapides Parish could drive south to Alexandria, LA, or it also could drive north to Natchitoches, LA. It all depends on the destination of the cargo. The Sub-model will direct various cargos by Decide block ("Decide 4") to their destinations based on the attributes set up in Assign block. Figure 3.2 gives an inside look to sub-model "Rapides Parish to Alexandria LA or to Natchitoches or to the end".

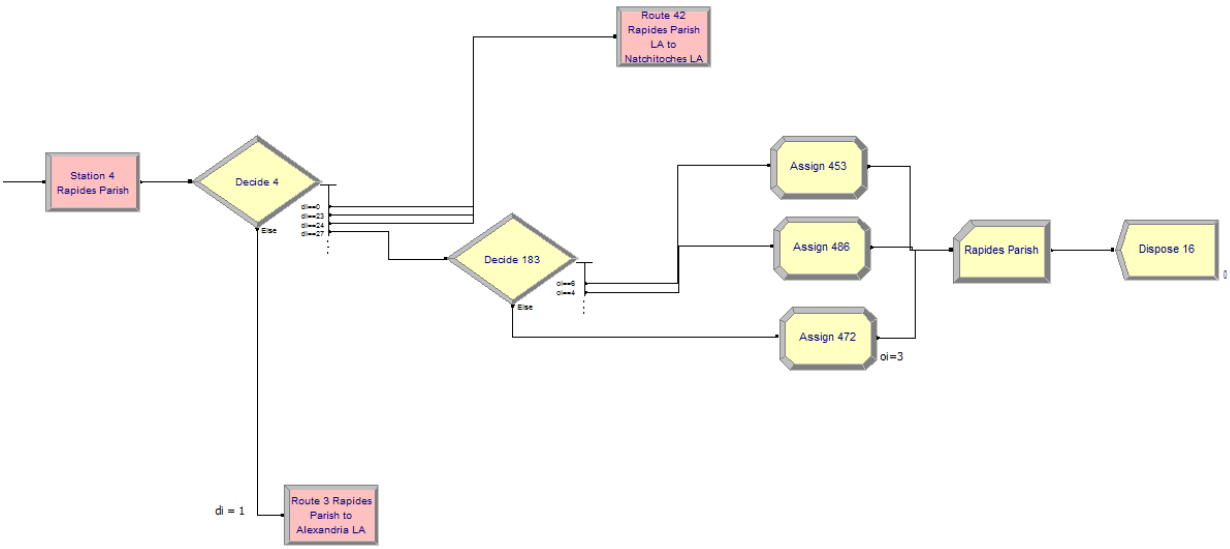

Figure 3.2 Sub-model "Rapides Parish to Alexandria LA or to Natchitoches LA or to the end"

The "Decide" block makes decisions according to different conditions. For example, "Decide 4" in Figure 3. 2 sends the cargos to Alexandria LA if destination index = 1, and to Natchitoches LA if destination index = 0 (destination is No.5 Highway Outlet), and so on. "Decide 4" also carry cargos to Rapides Parish to dispose (transport out of Rapides Parish Highway Station) if di=27 (destination is Rapides Parish). "Decide 183" directs cargos from various origin to its corresponding Assign block. The cargos originate from Lafayette Parish (origin index = 3) to "Assign 453", from Ouachita Parish (Origin Index =4) to "Assign 486", from East Baton Rouge Parish (Origin Index =6) to "Assign 472". The three assign block are involved in the calculation of some parameters (such as arriving time at finish line, etc.) of each entity required in highway mobility design.

The variables and entity in highway network list as the following:

- o_i: origin index, variable, established in the "Assign" block;
- d_i: destination index, variable, established in the "Assign" block; and
- Batches of Truckloads: 1 batch of truckloads = 1 animated truck = a 125-ton shipment by truck. Entity, established in the "Create" block.

3.2 Railway Network Simulation

The railroad network consists of 13 railroad outlets (major Louisiana State border crossing points for railroads) and five major railroad yards at Shreveport, Alexandria, Baton Rouge, Lake Charles and New Orleans. The five rail yards are all classification rail yard. The basic blocks,

“Create” and “Assign” for railroads are similar to those for highways. Although the Arena model for the Railroad network in Figure 3.3 has a similar look with the highway one in previous section, their sub-models share distinct logics and inside looks.

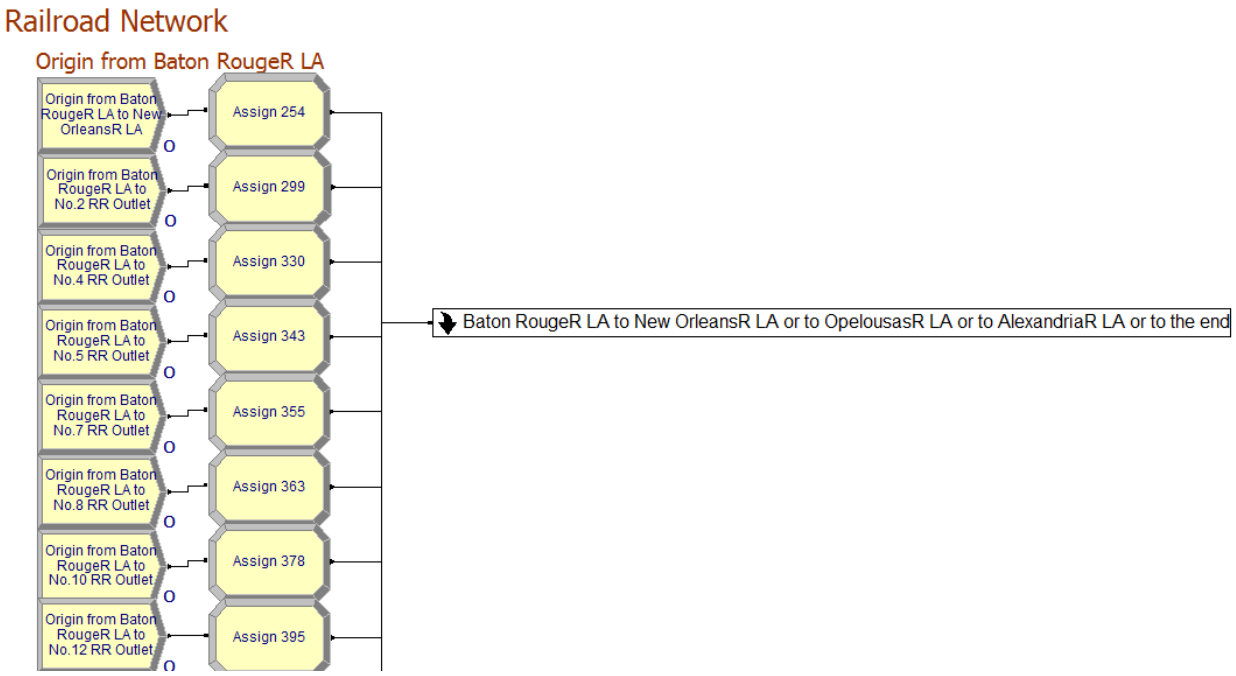

Figure 3.3 Part of Arena model for Railroad Network

The highway sub-model directs cargos to their desired destinations immediately, while a classification rail yard sub-model collects railcars from its originations or from an existing train in receiving area. All railcars are released from the existing train and go to classification area for sorting. In departure area, railcars are put up together again to form a train with the same direction. The simulation model limits train capacity up to 100 railcars. A block of railcars stay together from their origin to destination and are not separated at any time on their trip. Figure 3.4 shows the details of a classification rail yard “Baton RougeR LA to New OrleansR LA or to OpelousasR LA or to AlexandriaR LA or to the end”. The letter R after each location name represents that it is a railroad station.

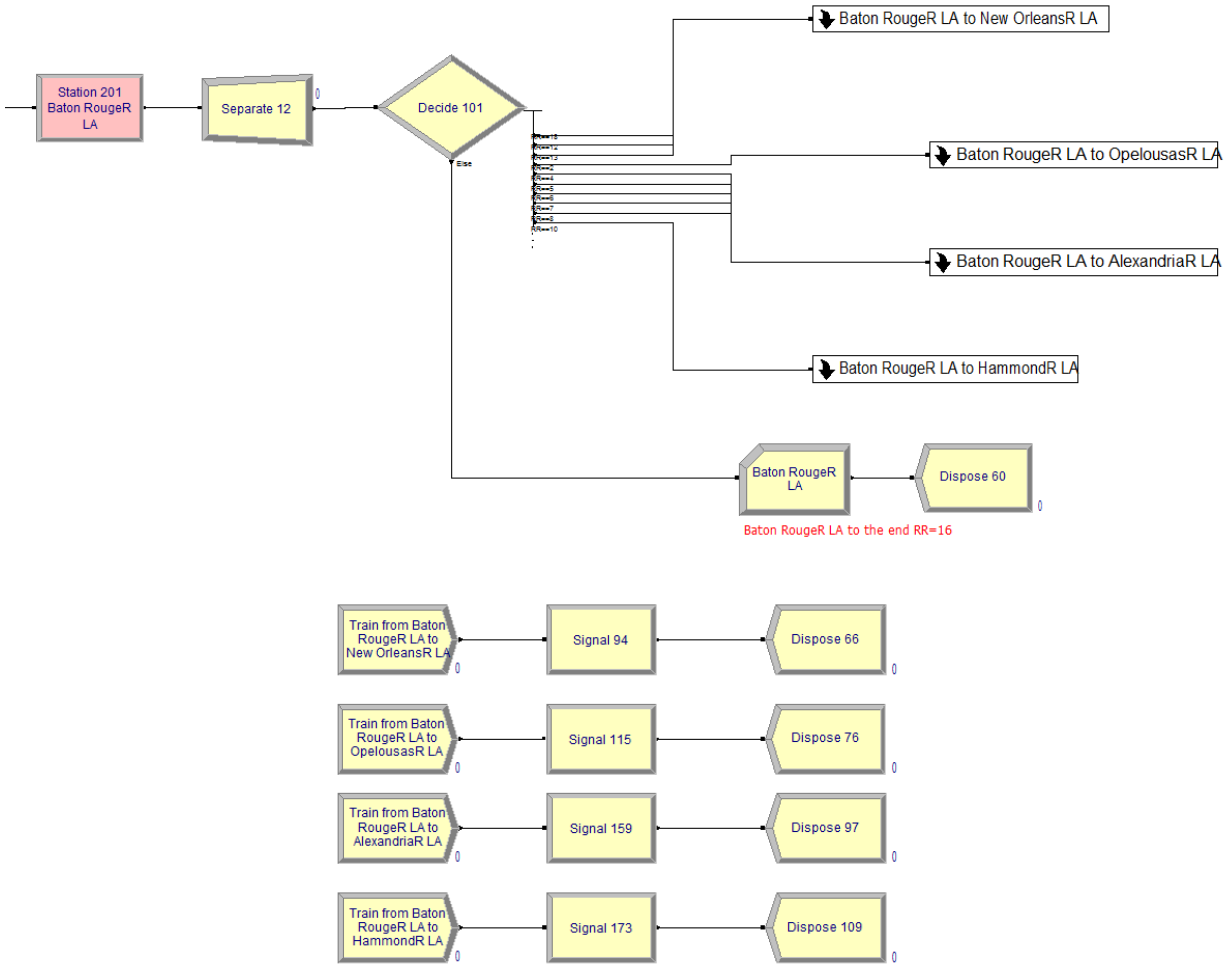

Figure 3.4 Details of a Classification Rail Yard Sub-Model

Other four sub-models were nested in the sub-model “Baton RougeR LA to New OrleansR LA or to OpelousasR LA or to AlexandriaR LA or to the end”. They are “Baton RougeR LA to New OrleansR LA”, “Baton RougeR LA to OpelousasR LA”, “Baton RougeR LA to AlexandriaR LA”, and “Baton RougeR LA to HammondR LA”. The details of the first sub-model are shown in Figure 3.5.

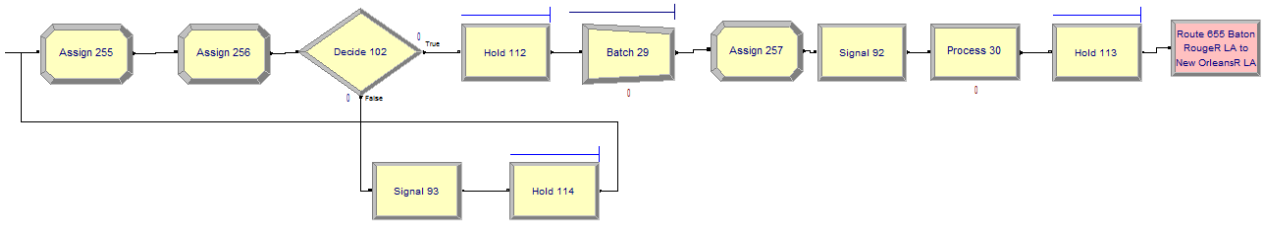

Figure 3.5 Details of Sub-model "Baton RougeR LA to New OrleansR LA"

This sub-model describes a typical classification and departure process in the classification and

departure area. Followed is the logic for the sub-model "Baton RougeR LA to New OrleansR LA".

```
Blk18 = TL18= TM18 == 0;        /*initial value of three parameters are 0*/
                                /*18 is the index of route from Baton Rouge Rail Station to New
                                Orleans Rail Station*/
Blk18 = Blk18+1;                /*count the number of blocks*/
TL18 = TL18 + RCsize;           /*record the existing length of the train*/
TM18 = TL18 / maxsize;          /*calculate a measure factor */
IF
        TM18 <= 1;              /*train is not full*/
THEN
        HOLD for signal 6551;   /*railcars stay at the track to wait for another blocks of railcars*/
                                /*waiting for full train signal 6551 to proceed*/
ELSE
        Send SIGNAL 6551        /*indicate the train is full, the existing railcars could form a train*/
        HOLD for signal 6550    /*wait for the completion of train formation process*/
Batch size = AINT(Blk18-LN(TM18)) /* Batch size = Truncate (Blk18 -  Natural logarithm (TM18) )*/
                                /* batch the railcars to a new train*/
Blk18 = TL18 == 0               /*go back to 0*/
Send SIGNAL 6550                /* Finished to form a train. The last block of railcars could go back to
                                track to wait for next train*/
PROCESS                         /* loaded train wait for inspection, the time follows TRIA (1.5, 2,
2.5)*/
HOLD for signal 655             /* wait for the train to departure on schedule*/
                                /* "Signal 94" in Figure 3.2.2 send the signal 655, a coming train
                                signal*/
ROUTE from Baton Rouge Rail Station to New Orleans Rail Station
```

The variables, entity, resource, expression and schedule in railroad network list as following:

- rv: train speed, constant. Equals to 20 mph.
- RR: railroad destination index, variable, established in Assign block.
- Maxsize: max number of railcars a train can contain. Constant. Equals to 100.
- RCsize: the number of railcars in a block, variable, established in Assign block. Cargos with the same origin-destination pair share the same RCsize.
- Blk*m*: the *n*th block in a train. *m* represents origin-destination pair index. Initial value is 0.
- TL*m*: the number of railcars in a train. *m* represents origin-destination pair index. Initial value is 0.
- TM*m*: measure factor in forming a train. $\mathrm{TM}m = \frac{\mathrm{TL}m}{\mathrm{maxsize}}$. *m* represents origin-destination. pair index. If TM*m*>1, the train is full. The last block of railcars will remain on departure tracks waiting for next train. The existing railcars could just wait for uploading to the coming train and depart. If TM*m*<=1, another block of railcars could be added to the train. Initial value is 0.
- Batches of Railcars: 1 batch of railcars = 1 block of railcars. Entity, established in Create block.
- Inspection time: inspection time for train. Established in Expression. Follows triangular distribution TRIA (1.5, 2, 2.5). The min inspection time is 1.5 hours, max inspection time 2.5 hours, and the most likely (the mode) inspection time 2 hours.
- Inspection person *p*: the index for inspection person. Established in Resource.

- Schedule *q*: the index for different train schedules. Established in Schedule.

3.3 Waterway Network Simulation

Waterway network consists of 6 ports on lower Mississippi river along the east state border of Louisiana. From north to south, the ports are Cracraft, Vicksburg, Natchez, Above Old River, Baton Rouge, and New Orleans.

Figure 3.6 shows part of the Arena model for the waterway network. The "Create" and "Assign" blocks and sub-models for waterway are similar to those for both highway and railroad models. Figure 3.7 shows the details of one sub-model "CracraftP AR to VicksburgP LA or to the end". The letter P following each location name indicates it's a port. The logic of this sub-model is much the same with highway sub-model.

The variables and entity in waterway network list as following:

- WW: waterway destination index, variable, established in Assign block
- wv: barge speed, constant. Equals to 10 mph.
- di: destination index, variable, established in Assign block
- Tows with 30 barges: 1 Tows with 30 barges = 1 animated boat = a 30000-ton shipment by water. Entity, established in Create block.

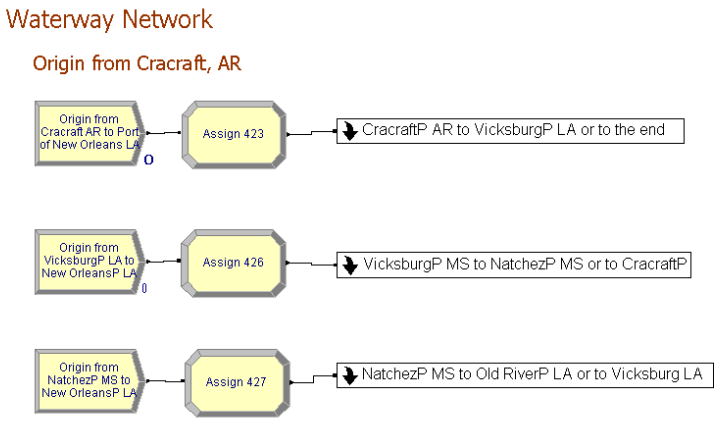

Figure 3.6 Part of the Arena Model for Waterway Network

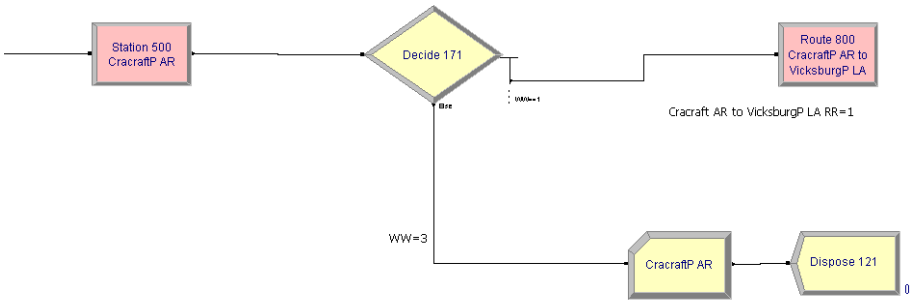

Figure 3.7 Details of Sub-model "CracraftP AR toVicksburgP LA or to the end"

3.4 Output

The simulation models runs for 1 replication, replication length is 30 days (720 hours), and runs for more than 3 hours. Figure 3.8 shows the print screen for animation. Animated trucks are in grey; animated trains are longer with blue and red color; and animated tows are in gray and black on the Mississippi river. The simulation model at the current stage includes mobility but will include other metrics of reliability, safety, and environmental stewardship. The research team has the data and detailed plan for realizing them but need more time.

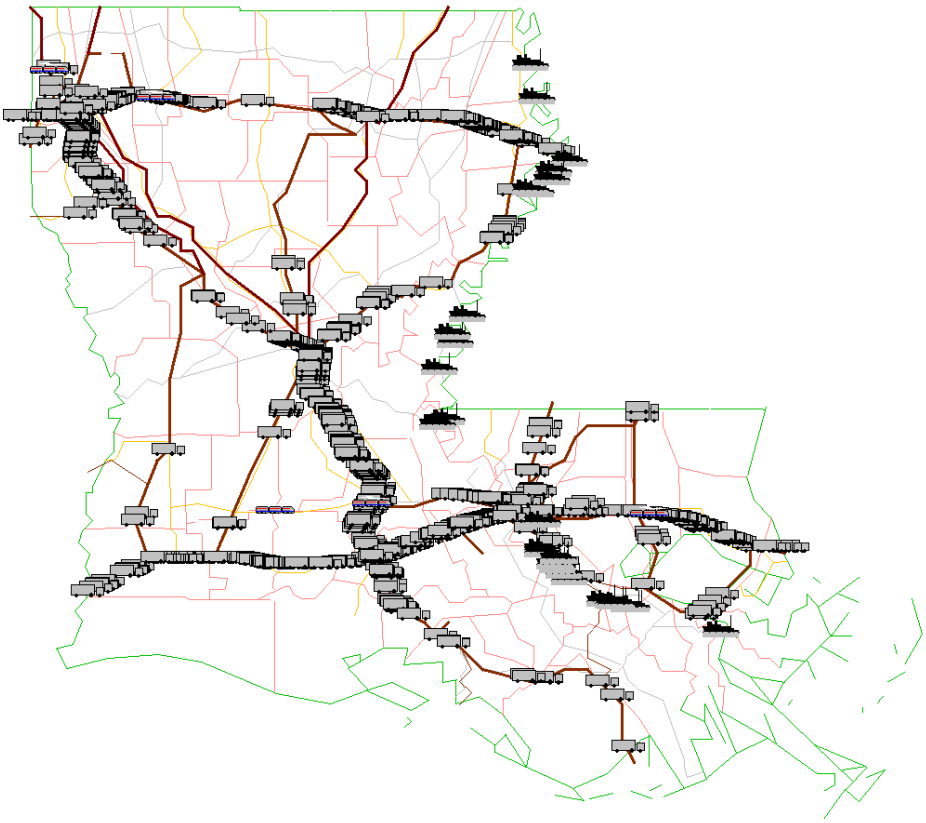

Figure 3.8 Simulation Screen Shot

4. Plan of the Second Stage

The research will conduct the following work after this mid-term review.

Keep developing the simulation model to include intermodal connections and all performance metrics, including reliability, safety, and environmental stewardship,

Validate the simulation with other data sources, including traffic counters at certain locations from LaDOTD, energy data, safety dataset, etc., and

Analyze certain scenarios provided by LaDOTD to identify efficient and effective measures to improve the overall performance of the Louisiana freight network.

CONCLUSIONS

The project is on the right track to finish all tasks proposed in the original proposal and the research team will deliver a comprehensive simulation to evaluate Louisiana freight network at the end of the project.

REFERECE

Aimsun (2014) http://www.aimsun.com/wp/?page_id=21, accessed on October 20, 2014.

Banks, J., Carson, J., Nelson, B.L., and Nicol, D. (2004) *Discrete-Event System Simulation, Fourth Edition*, Upper Saddle River, New Jersey: Prentice Hall.

AnyLogic (2014) Transportation and warehousing, http://www.anylogic.com/areas/transportation, accessed on October 20, 2014.

Bapat, V. and Sturrock, D. T. (2003) The arena product family: enterprise modeling solutions: the arena product family: enterprise modeling solutions. In *Proceedings of the 35th conference on Winter simulation: driving innovation* (210-217).

Bush, A., Biles, W. E., and DePuy, G. W. (2003) Waterway, shipping, and ports: iterative optimization and simulation of barge traffic on an inland waterway. In *Proceedings of the 35th conference on Winter simulation: driving innovation* (1751-1756). Winter Simulation Conference.

Caliper (2014) *TransModeler Overview*, http://www.caliper.com/transmodeler/, accessed on October 10, 2014.

Campbell, J. F., Smith, L.D., Sweeney, D.C., and Mundy, R. (2007) Decision Tools for Reducing Congestion at Locks on the Upper Mississippi River. *Proceedings of the 40th Annual Hawaii International Conference on System Sciences.*

Casavant, K. L., Denicoff, M. R., Jessup, E., Taylor, A, Nibarger, D., Sears, D., Khachatryan, H., McCracken, V. A., Prater, M. E., Jeanne, O., Marathon, N., McGregor, B., Olowolayemo, S. and Bruce, B. (201) *Study of Rural Transportation Issues.* United States Department of Agriculture, Agricultural Marketing Service, Transportation and Marketing Program.

Dalal, M. A. and Jensen, L. P. (2001) Simulation modeling at union pacific railroad. In *Proceedings of the 33nd conference on Winter Simulation* (1048-1055). IEEE Computer Society.

Druitt, S. (1998) Introduction to microsimulation. *Traffic engineering & control*, 39 (9).

FHWA, (2012) "Freight Analysis Framework 3 User Guide." *Freight Analysis Framework.* http://www.ops.fhwa.dot.gov/freight/freight_analysis/faf/faf3/userguide/.

Gambardella, L. M., Rizzoli, A. E., and Zaffalon, M. (1998) Simulation and planning of an intermodal container terminal. *Simulation*, 71(2), 107-116.

Gerlough, D. L. (1995) *Simulation of Freeway Traffic on a General-Purpose Discrete Variable Computer*. University of California, Los Angeles, 1955.

Goodman, C. J., Siu, L. K., and Ho, T. K. (1998) A review of simulation models for railway systems. In *International Conference on Developments in Mass Transit Systems 1998* (453). IEEE.

Hammann, J. E. and Markovitch, N. A. (1995) Introduction to ARENA, in the *Proceedings of the 27th conference on Winter simulation*, IEEE Computer Society, 519-523.

Hardy, M., Dodge, L., Smith, T., Vasconez, K. C., & Wunderlich, K. E. (2008) Evacuation

Management Operations Modeling Assessment: Transportation Modeling Inventory. In *15th World Congress on Intelligent Transport Systems and ITS America's 2008 Annual Meeting, Nova Iorque* .

Harrell, C., Ghosh, B., Bowden, O.R. (2004) Simulation Using ProModel, NewYork: McGraw-Hill.

Kay, M. G. (2009) *Production System Design*, Fitts Department of Industrial and Systems Engineering, North Carolina State University.

Kondratowicz, L. J. (1990) Simulation methodology for intermodal freight transportation terminals. *Simulation*, 55(1), 49-59.

Kotusevski, G. and Hawick, K. A. (2009) A review of traffic simulation software, *Research Letters in the Information and Mathematical Sciences*, 13, 35-54.

Lewellen, M., and Tumay, K. (1998) Network simulation of a major railroad. In *Winter Simulation Conference* (1135-1138). IEEE.

Lin, E. and Cheng, C. (2009). YardSim: a rail yard simulation framework and its implementation in a major railroad in the US. In *Winter Simulation Conference* (2532-2541). Winter Simulation Conference.

Ling, Y., Jin, M., Hilliard, M. and Usher, J. (2009) A study of real-time identification and monitoring of barge-carried hazardous commodities, *Proceedings of the* 17th *International Conference on Geoinformatics*, Fairfax, VA.

Mahmassani, H. S., Zhang, K., Dong, J., Lu, C. C., Arcot, V. C., and Miller-Hooks, E. (2007). Dynamic network simulation-assignment platform for multiproduct intermodal freight transportation analysis. *Transportation Research Record: Journal of the Transportation Research Board*, *2032*(1), 9-16.

Matheson, B. (2003) *Inbound Logistics.*

Nash, A. and Huerlimann, D. (2004. Railroad simulation using OpenTrack. *Computers in railways IX*, 45-54.

Parola, F. and Sciomachen, A. (2005). Intermodal container flows in a port system network:: Analysis of possible growths via simulation models. *International Journal of Production Economics*, 97(1), 75-88.

Pursula, M. (1999) Simulation of traffic systems - an overview, *Journal of Geographic Information and Decision Analysis*, 3, 1-8.

Reebie Associates, W. S. A., Global Insight, Incorporated, (2002) *Freight Analysis Framework: Derivation of FAF Database and Forecast*.

Rockwell Automation (2014) *Discrete Event Simulation Software*, https://www.arenasimulation.com/what-is-simulation/discrete-event-simulation-software, accessed on April 20, 2014.

Sagen, R. (1967) Traffic simulation with cathode ray output. Copenhagen/Trondheim

Sgouridis, S. P., Makris, D., and Angelides, D. C. (2003). Simulation analysis for midterm yard planning in container terminal. *Journal of waterway, port, coastal, and ocean engineering*, 129(4), 178-187.

Singh, R. (1999) Improved Speed-Flow Relationships: Application to Transportation Planning Models, *7th TRB Conference on Application of Transportation Planning Methods*. Boston.

Singh, R. and Dowling, R. (2002) Improved speed-flow relationships: application to transportation planning models, In S*eventh TRB Conference on the Application of Transportation Planning Methods*.

Skabardonis A. and Dowling, R. (1997) Improved Speed-Flow Relationships for Planning Applications, *Transportation Research Record* 1572: 18-23.

Tan, A., Bowden, R., and Zhang, Y. (2004) Virtual simulation of statewide intermodal freight traffic. *Transportation Research Record: Journal of the Transportation Research Board*, 1873(1), 53-63.

USDOT, (2004) *Western Uniformity Scenario Analysis: A Regional Truck Size and Weight Scenario Requested by the Western Governors' Association.*

Wang, H., Lee, J. L. and Lin, L. (1992) *Ponce de Leon channel shoaling and erosion studies Punta Gorda, Florida.* Monograph or Serial Issue , Gainesville, FL: University of Florida, Coastal and Oceanographic Engineering Department.

Wittmann, J., Göbel, J., Möller, D., and Schroer, B. (2007) Refinement of the virtual intermodal transportation system (vits) and adoption for metropolitan area traffic simulation. In *Proceedings of the 2007 summer computer simulation conference*. Society for Computer Simulation International.