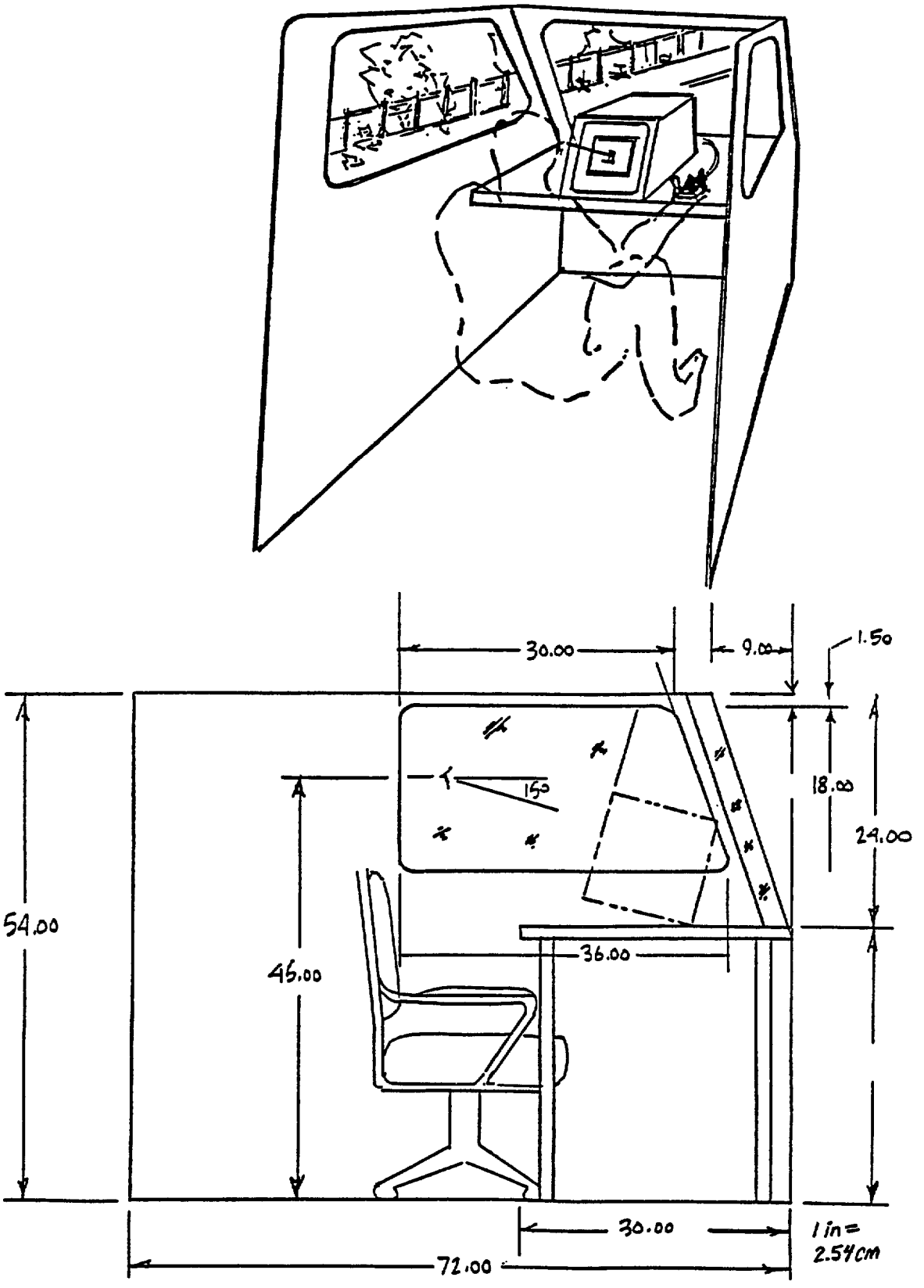

Figure 5. Mockup construction and dimensions.